RETIRED: This document has been officially retired, and the base products listed herein are now considered obsolete and are no longer available for sale. Consequently, the information contained within may no longer be current. This document is provided exclusively for reference and informational purposes.

HP StorageWorks 1000 Modular Smart Array

The HP StorageWorks 1000 Modular Smart Array (MSA1000) is a 2 Gb Fibre Channel storage system designed for the entry-level to mid-range Storage Area Network (SAN). Designed to reduce the complexity, expense and risk of SAN deployment, the MSA1000 is a scaleable, high performance storage system built with investment protection in mind. The modular design of the MSA1000 allows the user to easily add storage capacity as needed. With the addition of two HP StorageWorks MSA30 disk enclosures with space for a total of forty-two enterprise-class drives, maximum storage capacity is 12TB. All necessary configuration and management programs are included and there are no unexpected charges for extra licenses as your capacity needs grow or as you attach more servers.

The MSA1000 is a member of the HP StorageWorks Modular Smart Array family, delivering industry-leading technology to meet today's demanding and growing storage needs. These storage solutions offer the best price performance features for direct attach environments, small clusters, and entry-level and mid-range SAN environments. Each solution is designed to maximize transfer rates and reduce management costs, while driving rapid return on investment.

Key Features

The MSA1000 offers the following key features:

- Scaleable from 1 to 42 drives via HP StorageWorks drive enclosures for up to 12TB of storage
- Dual controllers (optional) can both be configured to provide high performance and fail-over protection
- Optional embedded 8-port 2 Gb Fibre Channel Fabric Switch
- RAID 6 with HP's Advanced Data Guarding technology (RAID ADG) - Highest level of fault tolerance, allocates two sets of parity data across drives and allows simultaneous write operations, this level of fault tolerance can withstand two simultaneous drive failures without downtime or data loss.
- 2 Gb/1 Gb Fibre connection to host - Supports both 1 Gb and 2 Gb Fibre Channel fabrics to ensure your investment in 1 Gb infrastructure is protected. Also works with the new 4 Gb switches and HBAs at 2Gb speed.
- High performance controller(s) built on DAS to SAN (DtS) architecture.
- Hot plug expansion and replacement support - Hot plug expansion and replacement of hard drives and redundant controllers, for simple, fast installation and maintenance. Fans and power supplies are also hot plug replaceable. Dependent on individual operating systems.

What's New

- Supporting dual active controller (active/active) functionality, available by downloading unique v7.0 firmware (free) from the HP website and upgrading the controllers.
- Adding full support for the HP-UX operating system with dual active controllers providing the best entry-level SAN solution for the industry's #1 rated UNIX®.
- Extending this active/active controller functionality to the Windows and Linux operating systems in heterogeneous environments involving Windows, HP-UX, and Linux operating systems. OpenVMS, Tru64 UNIX, NetWare and SCO are also supported with dual active controller configurations (in homogeneous installations only).

MSA1000 Highlights

High Levels of Performance, Scalability, and Functionality

- Performance – The MSA1000 and its components have been designed using standard 2 Gb interconnects and Fibre Channel technology. Performance is rated at a transmission rate of up to 30,000 IOPs from cache and bandwidth of up to 200 MB per second. With dual controller active/active configurations, performance increases to >41,000 IOP/s from cache and 367MB/s throughput. Performance can be substantially impacted by number of users and type of application.
- Modular Chassis – The modular design of the MSA1000 cabinet supports up to fourteen 1" Universal hard drives, redundant controllers, 2 Gb embedded fabric switches or hubs, fans and power supplies in a 4U rackmount cabinet.
- Scalability – The MSA1000 is easily expanded. The MSA1000 cabinet scales to 4 TB using fourteen 300 GB, 1" HP Ultra320 Universal hard drives. By simply adding additional StorageWorks disk Enclosures (two enclosures max), the MSA1000 scales to 12 TB using forty-two 300 GB 1" HP Universal hard drives - all within 10U of rack space.
- MSA SAN Switch 2/8 – The optional MSA SAN Switch 2/8, which can be installed within the MSA1000 cabinet, offers 2 Gb full fabric performance at an attractive price. A second MSA SAN Switch 2/8 can be installed for redundancy. There are seven pluggable ports available (four SFPs are included). The eighth port is directed internally to the controller.
- MSA Hub 2/3 – Not available for use with OpenVMS or Tru64 UNIX operating systems. The optional MSA Hub 2/3, which can be installed within the MSA 1000, offers 2 Gb performance. With two ports accessible by the user, the MSA Hub 2/3 is the ideal interconnect for low-cost 2-node clustering or simply attaching two servers. A second MSA Hub 2/3 along with a second controller can be installed for redundancy. This hub ships with two SFPs included. Now supports 2Gb and 4Gb HBAs.
- Hot Plug Expansion and Replacement Support – The MSA1000 supports hot plug expansion and replacement of hard drives, redundant controllers, fabric switches or hubs for simple, fast installation and maintenance. Fans and power supplies are also hot plug replaceable.
- RAID 6 with HP's Advanced Data Guarding technology (RAID ADG) – This is the highest level of fault tolerance. It allocates two sets of parity data across drives and allows simultaneous write operations. This level of fault tolerance can withstand two simultaneous drive failures without downtime or data loss.

DtS Architecture (Direct Attach to SAN) Data Migration

DtS (Direct Attach to SAN) architecture is an exclusive MSA1000 feature that provides a quick and easy way to migrate stored data, disks and enclosures protected by most U320 SCSI Smart Array controllers to a MSA1000 storage system.

Data that is currently stored on 1" Universal Ultra320 disk drives using recent HP Smart Array controllers, as well as data on a RA4100 or an MSA500 can easily be migrated to the MSA1000. Simply remove the drives from the older systems and insert them into the MSA1000. All configuration information and data will be preserved allowing migration to be completed in minutes, not hours or days. Refer to the MSA1000 DtS Data Migration White Paper for a list of compatible Smart Array controllers and further details.

MSA1000 Highlights

Broad Server, Operating System and FC Interconnect Support

The modular and scalable design of the MSA1000 provides an extremely flexible platform. You can buy what you need today and purchase additional capacity and performance as your data storage needs grow, instead of making a large up-front investment. Additional drives, controllers, cache, fabric switches and storage enclosures can easily be added, as your storage needs change.

- Fabric Support for 1, 2, and 4 Gb Infrastructure – The MSA1000 supports 1, 2, and 4 Gb FC fabrics to ensure that your investment in your current or future infrastructure is protected.
- Optional embedded interconnects – Both the MSA SAN Switch 2/8 and the MSA Hub 2/3 requires no rack space as they are installed in the MSA1000's chassis. This not only saves valuable rack space (up to 2U saved) but also eliminates some of the cabling needed with external interconnects. The MSA SAN Switch 2/8 ships with 4 SFPs installed and the MSA Hub 2/3 ships with 2 SFPs.
- Universal Hard Drive – Since the MSA1000 supports HP Universal 1" Ultra2, Ultra3 and Ultra320 drives, your investment in SCSI technology is protected and cost is minimized as you add new drives.
- Pre-Failure Warranty – Drives installed in an MSA1000 and monitored under Insight Manager are supported by a Pre-Failure (replacement) Warranty.
  NOTE: Pre-Failure Warranty allows for the replacement of designated drives in an MSA1000 before they actually fail when using Insight Manger on ProLiant servers.
  NOTE: Some operating systems may not support all of these features.
- Multi-platform Intel®, AMD® Opteron, PA-RISC and Alpha based Server Support – The MSA1000 offers Multi-platform server support to allow a broad range of servers to take advantage of the MSA1000's scalability, flexibility and connectivity, and supports ACU and Insight Manager. When used with a ProLiant server, the MSA1000 also provides unparalleled integration with the MSA1000 Support CD and Pre-Failure Warranty support.
- SCO UnixWare support – SCO OpenServer 6.0.0, SCO UnixWare 7.1.3 with Maintenance Pack 3 and 7.1.4 are supported.
- Integrated Configuration and Management Tools – The MSA1000 utilizes a standard, integrated set of management and utility software. These tools consistently lower the cost of ownership by reducing training and technical expertise necessary to install and maintain the MSA1000.

The MSA1000 comes with/supports the following configuration and management tools depending on what operating system:

Configuration (solution chosen as appropriate for operating system)	• Provides a graphical view of HP drive array configurations • Easy to use Wizards for configuration • ACU supports on-line configuration • Web Based ACU supports On-Line, Remote Web Based and Off-line configuration
Management/Health (solution chosen as appropriate for operating system)	• **Insight Manager** (IM) • **EMS** Used in conjunction with HP-UX servers • **Array Diagnostics Utility** (ADU) This utility collects information about the array controllers in the system and generates a list of potential problems it has identified • HP StorageWorks Modular Smart Array SMI-S Provider for Windows 2000/Windows Server 2003
ACU/ADU Bootable Utility (solution chosen as appropriate for operating system)	• The **MSA1000 Support Software CD** is a bootable media that enables a server to boot into a Linux shell and launch the ACU allowing configuration of the storage or generate a diagnostic report without requiring a pre-installed operating system or drivers.

Models

HP StorageWorks 1000 Modular Smart Array	MSA1000, with 256 MB cache	201723-B22
	MSA1000 Controller, with 256 MB cache	218231-B22
	256 MB Cache Module upgrade for Controller	254786-B21
	MSA Fibre Channel I/O Module	218960-B21
	MSA Hub 2/3 (integrated) ships with 2 SFPs installed	286763-B21
	MSA SAN Switch 2/8 (integrated) ships with 4 SFPs installed	288247-B21
	2 Gb SFP SW Transceiver Kit	A7446B
MSA1000 additional drive enclosures	Modular Smart Array 30 (MSA30) drive enclosure, single bus	302969-B21
	Modular Smart Array 30 (MSA30) drive enclosure, dual bus	302970-B21
MSA1000 SAN Starter G2 Kit (w/ PCI-E HBAs)	HP StorageWorks MSA1000 SAN Starter G2 Kit (Windows, NetWare or Linux compatible) NOTE: Includes (1) MSA1000 (1) MSA SAN Switch 2/8, (2) FC1142SR 4Gb PCI-E HBAs + cables	353803-B23
MSA1000 SAN Starter Kit High Availability G2 Bundle (w/ PCI-E HBAs)	HP StorageWorks MSA1000 SAN Starter Kit HA Bundle NOTE: Includes (1) redundant controller; (1) HP MSA SAN Switch 2/8 (4) SFP transceivers (2) FC1142SR 4Gb PCI-E HBAs + cables. Designed as an upgrade for the MSA1000 SAN Starter G2 Kit. Software is required to enable path failover. This can be Industry Standard (MPIO for Windows, QLogic for Linux) or optional Secure Path (available for most Windows, Linux and NetWare versions)	397079-B22
Secure Path Workgroup Editions (active/passive configurations only)	HP StorageWorks Secure Path v4.0C for Windows Workgroup Edition	213076-B26
	HP StorageWorks Secure Path v3.0C for NetWare Workgroup Edition	222411-B22
	Secure Path v3.0C for Linux Workgroup Edition	T3581A
	ProLiant Cluster Starter Kit for the Entry Level SAN for Windows 2000 and Windows 2003 (dual server, single path)	364023-B22
	ProLiant Cluster HA/F200 for Entry Level SAN, Windows 2000 and Windows 2003 (dual server, redundant path)	364026-B22
MSA1000 Small Business SAN G2 Kit	HP StorageWorks MSA1000 Small Business SAN G2 Kit (Windows and Linux compatible) NOTE: Includes (1) MSA1000; (1) 4/10q FC Switch; (4) SFP transceivers; (2) HP QLE220 FC HBAs (PN AG527A) + cables. NOTE: Factory Racking and Configure-to-Order is not available for this kit.The MSA1000 Small Business G2 Kit is not designed to connect to any other StorageWorks SAN or interconnect. See the MSA1000 Small Business link at http://www.hp.com/go/msa1000 for additional details	AG525A
	HP StorageWorks MSA1000 Small Business HA Upgrade G2 Kit for Windows and Linux NOTE: Includes (1) redundant controller; (1) Fibre Channel I/O Module (1) 4/10q FC Switch; (2) HP QLE220 FC HBAs (PN AG527A); (4) SFP transceivers and cables. NOTE: Factory Racking and Configure-to-Order is not available for this kit.	AG526A
	HP QLE220 4/2 Gb, 32-Bit/133 MHz PCI-e Fibre Channel Host Bus Adapter NOTE: This is a single channel HBA for Windows 2003 and Linux, ONLY for use with the MSA1000 Small Business SAN G2 Kit	AG527A
	HP QLE220 4/2 Gb, 32-Bit/133 MHz PCI-e Fibre Channel Host Bus Adapter NOTE: This sku is only used when being included in an HP factory integrated order including ProLiant servers. Windows 2003 and Linux ONLY.	AG527A#0D1

Models

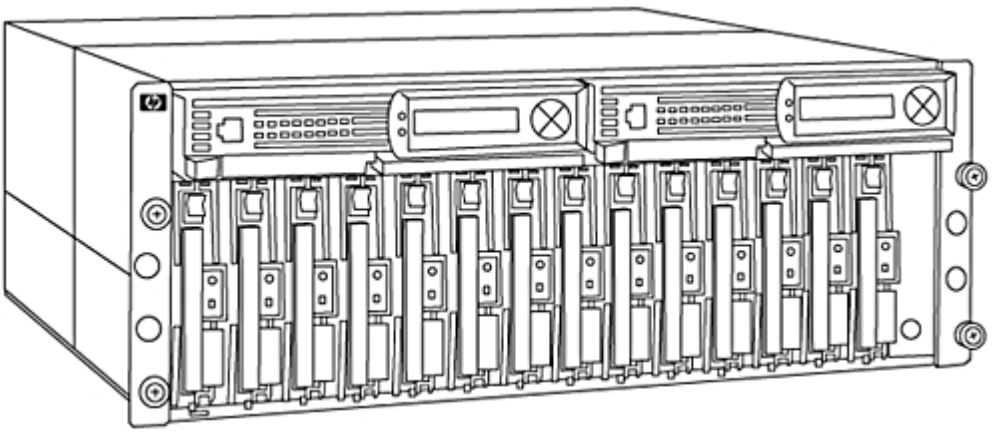

MSA1000 Components

With the following components, your storage capacity and performance can be scaled to new levels:

HP StorageWorks Modular Smart Array 1000

The 4U cabinet houses up to fourteen 1" Universal hot pluggable Ultra2, Ultra3, and/or Ultra320 drives. Each MSA1000 includes the following standard components: (1) MSA1000 Controller, (1) MSA Fibre Channel I/O Module with a single SFP, dual hot pluggable fans/power supplies and power cables, documentation and a support software CD.

The modular design of the MSA1000 makes it possible to add redundant controllers, redundant single port Fibre Channel I/O Modules, 3-port hub, or embedded fabric switch and storage expansion enclosures. Additional storage enclosures may be added without power cycling the MSA1000.

MSA1000 Controller

The MSA1000 Controller is an integrated RAID controller with an LCD/LED status display and 256 MB read/write battery-backed cache (expandable to 512 MB per controller). One MSA1000 Controller is included with the MSA1000; a redundant MSA1000 Controller is an option. Purchase of Secure Path software or use of various industry standard MPIO solutions is a requirement if a second controller is chosen.

Key Features

- Redundant controller support with mirrored cache
- Fabric, Private Loop & Public Loop Support
- Auto Negotiated F, FL & L Port Login
- RAID 0, 1, 1+0, 5 and ADG
- 2 Gb/1 Gb Frequency Agile
- Primary and Secondary Inter-Controller Link (ICL)
- Host based configuration via ACU (OS dependent)
- Optionally configurable with Command Line Interface (CLI)
- Remote configuration and monitoring via ACU (offline and remote) & Insight Manager (OS dependent)

MSA1000 Controller Management Features

- **Selective Storage Presentation**: allows multiple hosts to access a single MSA1000 storage system. Host access can be defined all the way down to a logical volume level.
- **Online RAID Level Migration**: allows for online post-configuration change to RAID level without destroying data or volume information.
- **Online Capacity Expansion**: lets you add storage to an operational MSA1000-reducing expensive server downtime.
- **Global Online Spare**: reduces the risk of data loss by facilitating automatic rebuilds after a drive failure.

Fault Tolerance

Several fault tolerant configurations which keep data available and servers running while drives are being replaced are supported including:

- **RAID 6 with Advanced Data Guarding**: Allocates the equivalent of two parity drives across multiple drives and allows simultaneous write operations.
- **Distributed Data Guarding** (RAID 5): Allocates parity data across multiple drives and allows simultaneous write operations.
- **Drive Mirroring** (RAID 1, (1+0 Striped Mirroring)): Allocates half of the drive array to data and the other half to mirrored data, providing two copies of every file.

Fault Recovery	Minimizes downtime, reconstructs data, and facilitates a quick recovery from drive failure: • Online Spares: If a failure occurs, recovery begins with an online spare and data is reconstructed automatically. Multiple online spares can be assigned per array and used across multiple arrays. It is also possible to assign different online spares across different arrays. • Array Accelerator: Onboard, battery-backed cache memory protects data in the event of a power failure. In the unlikely event of a controller failure, the battery-backed cache will save critical user data.

MSA Fibre Channel I/O Module	Provides a single 2 Gb Fibre Channel connection per controller from the host side into the MSA1000. The MSA Fibre Channel I/O Module includes one 2 Gb, Short Wave, Small-Form-Factor-pluggable Transceiver (SFP). A second MSA Fibre Channel I/O Module can be installed for redundancy when a redundant controller is used. The single I/O module can be used in a direct connect configuration (no switch or hub) in Windows, Linux, NetWare, SCO and HP-UX only.

MSA SAN Switch 2/8 (embedded)	The optional MSA SAN Switch 2/8 offers low price per port and full scalability, doing so while taking zero rack space, even in a redundant configuration. This second generation integrated switch option offers the customer more ports than our previous offering and is a full member of the HP SAN Switch family, assuring interoperability from the smallest to the largest SAN configuration. The HP StorageWorks MSA SAN Switch 2/8 can be used by the true entry-level customer looking for a very inexpensive switch based on cost per port. This same switch can be attractive to the larger customer who must have the interoperability with their other external B-Series SAN switch products from HP and especially appreciates the rack space saving characteristics. (The MSA SAN Switch 2/8 replaced the obsolete MSA Fabric Switch 6 option.)
Key Features	• Eight 2 Gb ports: 1 to controller, 7 user accessible • Product ships with 4 SFPs installed • No E-port restriction, accepts all optional software • Interoperates with external HP B-Series SAN Switch 2 and 4 Gb switches • Configuration and management methodology common with SAN Switch product line, same methods as installed base of 40,000+ HP 1 and 2Gb SAN Switches

MSA1000 Components

MSA Hub 2/3 (embedded)
Active/passive configurations only

The HP StorageWorks MSA Hub 2/3 is a low-cost interconnect designed for clustering or low cost, high speed attachment of two servers to the MSA1000. The MSA Hub 2/3 is a 3-port Fibre Channel Arbitrated Loop hub that is mounted on a blade that easily installs inside the MSA1000 storage unit, saving valuable rack space. Two of these hubs may be installed for redundancy within the MSA1000. The MSA Hub 2/3 is not cascadable. It is not certified for Alpha environments.

The hub presents the user with two SFP ports for simple direct attachment to two single or clustered servers without having to purchase an external interconnect device. It offers the most cost-effective solution for a user to enable a clustered server environment.

- **High Performance**: supports MSA1000 with a 2 Gb interconnect capable of up to 200 MB throughput
- **Low Cost**: supports the entry-level SAN array with the most cost effective option for 2-node clustering
- **Compact**: installs in the MSA1000, replacing the I/O module, saving valuable rack space
- **Complete**: comes with two SW SFPs - no need for further investment
- Only supported with active/passive firmware
- Not qualified with servers utilizing Tru64 UNIX or OpenVMS operating systems.

2/4 Gb Small Form Factor pluggable (SFP) SW Transceiver Kit

2/4 Gb Small-Form-Factor-pluggable (SFP) SW Transceivers are industry standard connection devices, which hot plug into 2 or 4 Gb infrastructure components such as 2 or 4 Gb Fabric Switches. HP StorageWorks 2/4 Gb SFP SW Transceivers support distances up to 300 meters at 2 Gb and 500 meters at 1 Gb using multi-mode fiber optic cable.

Multi-Mode Fibre Channel Cables

Multi-Mode Fibre Channel cables provide a thin, flexible cabling solution that is immune to electromagnetic interference. HP offers cables to connect the MSA1000 to 4 Gb, 2 Gb and 1 Gb Fibre Channel infrastructures. LC to LC cables are used when connecting the MSA1000 to 2 or 4 Gb Fibre Channel components because both connections will utilize small form factor transceivers. LC to SC cables are used when connecting the MSA1000 to 1 Gb Fibre Channel components. 1 Gb components use the larger GBIC style transceivers.

Software Components

The MSA1000 utilizes a single, consistent set of utility software for storage and RAID management, setup, configuration and troubleshooting. This consistency reduces the cost of ownership by reducing the training and technical expertise necessary to install and maintain your HP storage solution.

Array Configuration Utility (solution chosen as appropriate for operating system)

- Provides a graphical view of HP drive array configurations
- Easy to use Wizards for configuration
- ACU supports on-line configuration
- Web Based ACU supports On-Line, Remote Web Based and Off-line configuration
- Runs online on Microsoft Windows 2000 and 2003

Selective Storage Presentation (SSP)

- Built-in to MSA1000 Controller firmware and controlled via ACU
- Allows setting of access rights to the MSA1000 storage by hosts
- Access control can be set up to a logical volume level using the Array Controller Utility

---

Insight Manager (solution chosen as appropriate for operating system)

- Powerful storage, server and server option management tool
- Monitor storage from a remote central location
- Browser based System Insight Manager provides full access from anywhere on the Intranet, eliminating the need for a dedicated Insight Manager management console

---

OS Support for Single controller or dual controller active/passive configurations

- Microsoft Windows Enterprise Edition 2003 (32 & 64-bit) R2
- Microsoft Windows Standard Edition 2003 (32 & 64-bit) R2
- Microsoft Windows 2000 Server Edition (32 & 64-bit)
- Microsoft Windows 2000 Advanced Server (sp4) (32 & 64-bit)
- HP-UX 11.11, 11.23 and 11.31
- Red Hat Linux Enterprise Advanced Server and Enterprise Linux 3.0, 4.0, and 5.0 (32-bit & 64-bit) SuSE Linux SLES8, SLES9, and SLES 10 (32 & 64-bit)
- Netware 6.5.
- Tru64 UNIX or OpenVMS supported in homogeneous environments only (no hub support).
- SCO OpenServer 6.0.0, SCO UnixWare 7.1.3 and UnixWare 7.1.4

Please refer to compatibility matrix at http://www.hp.com/go/msa1000 for complete configuration support.

OS Support for Dual controller active/active firmware (requires 2nd controller and free firmware download)

Optional controller firmware is available for downloading at no cost from the HP MSA1500 Web Site that enables both controllers to operate in an active/active mode. The following are the only operating systems that have been tested and are supported with active/active functionality in a homogeneous configuration only. Dual active (active/active) controller support is heterogeneous with Windows, HP-UX, and Linux environments.

- Microsoft Windows Standard and Enterprise Editions 2003 (32 & 64-bit) R2
- Microsoft Windows 2000 Server and Advanced Server (SP4) Editions (32 & 64-bit)
- HP-UX 11.11, 11.23, and 11.31
- Red Hat Linux Enterprise Linux 3, 4, and 5 (32-bit & 64-bit)
- SuSE Linux SLES8, SLES9, SLES 10 (32 & 64-bit)
- Tru64 UNIX or OpenVMS supported in homogeneous environments only (no hub support).
- NetWare 6.5
- SCO

NOTE: HP Secure Path is not supported on active/active controller configurations. Industry standard failover methodology is employed.

Software Components

HP-UX support

The MSA1000 for HP-UX only supports active/active dual controller configurations or single controller configurations. Two controller, active/passive configurations are not supported. HP-UX support is heterogeneous with Windows and Linux. Command Line Interface (CLI) is used for configuration and Event Monitoring Service (EMS) for monitoring. Root/Boot/Dump/Swap/Install is also supported.

- Command Line Interface (ACU/CLI) is used for configuration and Event Monitoring Service (EMS) for monitoring.
- Root/Boot/Dump/Swap/Install is supported.
- PV Links is supported for multi (HBA) path / single controller (2 HBAs) configurations.
- Fabric and direct Connect are supported
- HP-UX 11.11, 11.23, and 11.31 PA-RISC and Itanium

SCO UnixWare and OpenServer

HP's MSA1000 SAN solution is available today to run on SCO UnixWare 7.1.3 and 7.1.4 and SCO OpenServer 6.0.0. The MSA1000 with a single controller or dual/active controllers may be connected to a ProLiant server with SCO UnixWare in one of the below described manners:

- Direct Attach
- Through an internal switch

Software Certifications

- Microsoft Cluster Server Certification
- HP Serviceguard for Linux & HP-UX
- Hewlett Packard Data Protector
- VERITAS Backup Exec and NetBackup
- Legato NetWorker for Windows
- SteelEye LifeKeeper for Linux Certification

Please refer to compatibility matrix at http://www.hp.com/go/msa1000 for complete configuration support.

Optional Software

HP StorageWorks Secure Path
(only for use with dual controller active/passive configurations)

Secure Path is not supported with dual active (active/active) controller configurations. Industry standard MPIO solutions are employed for those situations.

HP StorageWorks Secure Path is a family of high availability multi-pathing software products providing continuous data access from the HP RAID Array to host servers running the Windows Server 2003, Windows 2000, Linux and NetWare operating systems.

Redundant hardware, advanced RAID technology and Secure Path's automated failover capability are used to enhance fault tolerance and availability. Secure Path effectively eliminates controllers, disk drives, interconnect hardware and host bus adapters as single points of failure in the storage subsystem.

The attachment of non-Secure Path (single HBA) servers to an MSA1000 with dual controllers (active/passive) that has servers with Secure Path (dual HBA) attached is supported where the operating systems are Windows or NetWare. Users must realize that in event of a controller fail-over (failure of active controller) the single path servers will lose access to their data on the MSA1000.

NEW – Secure Path can now support up to an 8-node cluster in Windows Server 2003.
NOTE: If Secure Path for Linux is used on any node or cluster attached to an MSA1000, all nodes must also have Secure Path installed, regardless of operating systems.
NOTE: refer to http://www.hp.com/go/securepath for the latest Secure Path parameters.

Key Features	Maintains connections to storage
	Monitors I/O paths and alerts on significant events
Used in	Stand alone Configurations
	Cluster configurations
	SAN configurations

MSA1000 utilization of Industry Standard fail-over solutions

HP supports additional high availability multi-pathing capabilities within various operating systems and through third-party vendors, providing continuous data access from HP's RAID MSA1000 to host servers. Options are available for servers running the Windows and Linux operating systems. More information and the explanation of restrictions are available at http://h18006.www1.hp.com/products/sanworks/multipathoptions/index.html

- Microsoft Windows 2000 and 2003 (32 bit EE and 64 bit EE only)can utilize the HP MPIO Basic Failover v1.3 for MSA Arrays, a DSM available for free download at the above site. MSAs in active/active configurations use the Full Featured MPIO.
- Linux industry standard failover for the MSA1000 is available at no charge within the HBA device driver from QLogic (A/A or A/P) or Emulex (active/active only).
- HP-UX utilizes PV-Links. NetWare, OpenVMS, Tru64 UNIX, and NetWare use path fail-over methods intrinsic to the OSes.

Optional Software

MSA1000 clustering

Clustering is rapidly gaining in popularity as users desire a high level of data availability. Many of the old cluster restrictions that were the product of both hardware and operating systems have been overcome. While there still remain configuration limits, the result is a new high degree of flexibility both in number of clusters, mixing clusters with single nodes, and the integration of dissimilar operating systems.
For example you may mix three Microsoft (Windows Server 2003 or Windows 2000) clusters and other individual servers, even doing so in a heterogeneous server operating system environment. Windows Server 2003 allows a single cluster of up to eight nodes.

Single-path (single controller, non-Secure Path) NetWare clustering has been successfully tested up to a 12-node cluster. NetWare clusters employing Secure Path (dual controller, dual HBAs) are limited to six nodes. Multiple NetWare clusters (and single servers) may have concurrent access with no limitation inherent to the MSA1000. Likewise up to a 16-node Linux cluster (single controller, non-Secure Path) utilizing SteelEye LifeKeeper for Linux clustering software has been tested and is supported. Presently a Linux/Secure Path configuration is limited to a two-node cluster. Refer to http://www.hp.com/go/securepath for any restriction on Linux with Secure Path.

The MSA1000 has the ability to be configured with thirty-two LUNs. Best practices would dictate generally no more than sixteen servers accessing a single MSA1000. More commonly, users have had an average of five to eight nodes. This can be any combination of hosts or clusters with different operating systems while holding fast to the guidelines and limits described in the above paragraphs. Performance within these guidelines is heavily dependent on the actual number of end users and types of applications being employed.

For more information, click on the link: http://www.hp.com/solutions/ha.

ProLiant Cluster F200 for the Entry Level SAN
(Microsoft)

- The ProLiant Cluster F200 for the Entry Level SAN is designed to assist in simplifying the configuration of cluster solutions that provide high levels of data and applications availability in the Microsoft Windows Operating System environment through clustering to provide no-single-point-of-failure. The ProLiant Cluster F200 for the Entry Level SAN supports a two-node cluster based on Microsoft Windows 2000 Advanced Server and two to eight-nodes cluster based on Microsoft Windows Server 2003 Enterprise Edition operating system, the StorageWorks Modular Smart Array 1000 (MSA1000) and MSA1500 cs, or Raid Array RA4100 and ProLiant Servers. This solution also supports StorageWorks Secure Path management software.

HP ProLiant Cluster HA/F200 for Entry Level SAN (Microsoft)	364026-B22

HP Serviceguard for Linux

HP Serviceguard is a high availability solution that leverages the strength of HP's experience in the HA business, bringing the best-in-class mission critical technologies to the Linux environment and ProLiant and Integrity servers. HP Serviceguard provides critical applications the high availability that enterprise customers require for 24x7 business operations. It is designed to protect applications from a wide variety of software and hardware failures, monitoring the health of each server (node) and quickly responding to failures including system processes, system memory, LAN media and adapters, and application processes. Serviceguard enables customers to cluster HP ProLiant and Integrity server families with shared storage from HP Modular Smart Array 1000 to HP StorageWorks XP disk arrays in a 2-node SCSI or 2 to 16-node Fibre Channel configuration.
Please refer to the HP ProLiant High Availability web site under Linux clustering for ProLiant for the latest information on Serviceguard for Linux: http://www.hp.com/go/sglx
For general Serviceguard information (HP-UX and Linux), please refer to:
http://www.hp.com/go/serviceguard

HP Serviceguard for Linux ProLiant Cluster, A.11.18 (2 license version)	305199-B27
HP Serviceguard for Linux, A.11.18 (single license version)	307754-B27
HP Serviceguard for Linux ProLiant Cluster, A.11.16 (2 license version)	305199-B26
HP Serviceguard for Linux, A.11.16 (single license version)	307754-B26

HP Serviceguard For HP-UX	HP Serviceguard for HP-UX 11i v2 and 11i v3	T1905CA

HP ProLiant Clusters for NetWare

HP supports a broad range of solutions for NetWare Cluster services including configurations featuring the MSA1000 and optionally with HP StorageWorks Secure Path. These solutions provide high availability and maximum resource utilization for NetWare environments from small file sharing implementations to enterprise business computing. Single-path (single controller, non-Secure Path) NetWare clusters of up to 12-nodes have been successfully tested. Presently 2-node NetWare clusters with Secure Path have been tested and approved with larger NetWare cluster testing planned. Multiple NetWare clusters are allowed.
NOTE: Refer to http://www.hp.com/go/securepath for the latest Secure Path for NetWare parameters.

HP ProLiant Parallel Database Clusters for Oracle on MSA1000

The HP Parallel Database Clusters (PDC) for Windows and Linux provide the industry's leading platform for deployment of Oracle 9i Real Application Clusters. The PDC is a multi-node (up to six in Microsoft environments and up to four with Linux)) shared-storage clustering environment that enables industry standard Windows and Linux platforms to deliver performance previously limited to very large SMP (16 to 32 processor) environments. Every server node in the cluster has concurrent read-write access to the common shared database residing on the MSA1000 storage SAN. The multi-node architecture is inherently highly available, loss of any single node results in some degradation of performance but the database remains active and accessible. When optimally integrated with Oracle load balancing and transparent application reconnect features, clients are completely insulated from the loss of a server resource or an Oracle instance failure on a node. To complement the high availability of the server cluster in a Windows environment, the Parallel Database Cluster integrates HP StorageWorks Secure Path for fully redundant access to the database in the even of any failure in SAN connectivity. Secure Path for Linux will be available at a later date. Combined, the Oracle clustering technology and HP platform technology deliver cost effective and highly available enterprise solutions for database applications.

For more specific information concerning configuration, interconnect options, and dual path software refer to the HP/Oracle site at http://h18000.www1.hp.com/solutions/enterprise/highavailability/oracle/index.html.

Key Features

- Support for Windows 2000 and Windows Server 2003
- Virtualization – multiple storage arrays can be consolidated into a pool of disk space for individual or clustered systems to use. Multiple virtual disks, up to 2 terabyte in size, can be created from a pool for users and their applications. Existing storage units with production data can be imported into a pool. The data partition is preserved as a virtual disk and unused capacity is added to the pool.
- Online volume growth – Enables easy, non-disruptive growth for Windows 2000 or and Windows Server 2003 with zero downtime. Allows a system administrator to grow an existing volume on virtual disks and Windows 2000 basic disk. The system will remain online, and the data on the volume will remain intact.
- Snapshots – Instant, point-in-time snapshots for backup, online restore, testing or data mining. Enable instant creation of multipurpose virtual replicas of production data without the requirement of a physical copy Snapshots identical to ordinary physical disks, with both read and write capability. Snapshots can remain online for restore operations, testing, and data mining. Full interoperability with the Windows Server 2003 Volume Shadow-copy Service (VSS).
- E-mail notification – customization of events for servers under your span of control.
- Enhanced pool deletion – delete a pool that contains snapshots and virtual disks or delete a virtual disk that contains snapshots with the DELTREE command.
- Interoperability with StorageWorks Storage Mirroring

- **Enhanced policy descriptions** – the policy key descriptions have been updated for easier identification.

Please refer to the Optional Software section of this document or visit http://www.hp.com/go/msa1000 for additional details.

HP StorageWorks Storage Mirroring

OpenView Storage Mirroring is designed to take small-medium enterprises beyond periodic backup to provide continuous data protection with minimal data loss and immediate recovery from any disaster or system outage. Utilizing patented STAR technology, OV Storage Mirroring captures byte-level changes as they happen and replicates those changes to one or more target servers at any location in the exact sequence sent by the source. Advanced features put you in control of bandwidth usage, queue data changes for replication during off-peak hours, enable e-mail, pager or wireless notification when changes occur and scales organically to meet the need of your environment. OV Storage Mirroring is the core component to the following solutions: disaster recovery, remote availability, centralized backup, serverless backup, data distribution, mining and server/storage migration.

- Supports Microsoft Windows 2000/NT/2003servers
- One-to-one failover/fail back solution for MS-Exchange, MS-SQL and Oracle providing automatic failover and near instantaneous access to replicated data or use replicated data or rebuild your local server.
- Server Groups – enables the "grouping" of servers on the management console (GUI) allowing focus on only those servers under your span of control
- Continuous, asynchronous byte-level replication with intelligent data compression captures changes as they occur, ensures sequence of data mirrored on target, and provides user-configurable compression levels to ensure efficient usage of network resources.
- One-to-many and many-to-one host configurations allowing multiple production servers to use the same target server

For more information visit http://h18006.www1.hp.com/products/storage/software/sm/index.html

---

Server Compatibility

All ProLiant x86 and x86_64 servers are fully supported unless noted below.
NOTE: New model testing is ongoing.

ProLiant x86 servers
BL20p G4, BL30p, BL45p G2, DL140 G2, DL320 G5, DL360, DL360 G2, DL360 G3, DL360 G5, DL380, DL380 G2, DL380 G3, DL380 G5, DL560, DL580, DL580 G2, G3, G4, ML370 G4, ML370 G5, ML530, ML530 G2, ML570 G3, ML570 G4

ProLiant AMD Opteron servers
BL25p, BL25p (Dual Core), BL35p, BL35p (Dual Core), BL45p, BL45p (Dual Core), DL145, DL145 G2 (Dual Core), DL365, DL385, DL385 (Dual Core), DL385 G2, DL585, DL585 G2 (Dual Core) (DL145-G1 not supported in Boot-From-SAN environment)

ProLiant INTEL EM64T servers
BL20p G3, BL20p G4, BL460c, BL480c, DL360 G4p, DL360 G4, DL360 G5, DL380 G4, DL380 G5, DL580 G3, DL580 G4, ML350 G4p, ML350 G5, ML370 G4, ML370 G5, ML570 G3, ML570 G4

Integrity IA64 (Itanium) servers
rx1600, rx1620, rx2600, rx2620, rx4610, rx36xx, rx4640, rx5670, rx66xx, rx7620, rx8620, rx8800, rx9610, zx2000, zx6000, Integrity Superdome
NOTE: BL60P (FC Mezzanine Card, FC passthru or internal McData/Brocade FC 4Gb Switch Cube)

HP-UX specific servers
rp24xx, rp34x0, rp4440, rp54xx, rp740x, rp7410, rp7420, rp8400, rp8420, SD16000, SD32-128A,

SD32/64000, C3xxx, B2000, J5xxx, J6000, J7xxx, K-class

Supported Alpha servers
DS10, DS15, DS20, DS20E, DS25, ES40, ES45, ES47 (PCI-X), ES80 (PCI-X), GS60, GS60E, GS80, GS140, GS160, GS320, GS1280 (PCI-X)

NOTE: Certification of new ProLiant and Integrity server models is ongoing. Not all OSes are supported on all models. Supports most multi-vendor industry standard 32-bit Intel-based (x86) and Opteron servers.

Configure to Order Program Information

HP introduces the new Configure to Order program on a limited basis. It is not yet available in all areas. The MSA1000 and its options may or may not be factory installed in a rack with add-on controllers, switches, hubs, MSA30 enclosures and hard drives. The MSA1000 may be integrated with 64-bit Integrity and PA-RISC servers or ProLiant or as standalone storage.

Configure to Order	Products Approved for CTO	CTO SKUs
	Modular Smart Array 1000	201723-B22 #0D1
	HP MSA1000 Controller 256 cache ALL	218231-B22 #0D1
	256 MB Cache Upgrade	254786-B21 #0D1
	2 Gb FC Port Kit	218960-B21 #0D1
	MSA SAN Switch 2/8 ALL	288247-B21 #0D1
	MSA1000 Embedded 3-port Hub	286763-B21 #0D1
	MSA30 U320 Enclosure, single bus	302969-B21 #0D1
	300 GB Pluggable Ultra320 Universal Hard Drive, 10,000 rpm (1")	350964-B22 #0D1
	146 GB 10K U320 Pluggable Hard Drive WW	286716-B22 #0D1
	72 GB 10K U320 Pluggable Hard Drive WW	286714-B22 #0D1
	146.8 GB Pluggable Ultra320 Universal Hard Drive, 15,000 rpm (1")	347708-B22 #0D1
	72 GB 15K U320 Pluggable Hard Drive WW	286778-B22 #0D1
	36 GB 15K U320 Pluggable Hard Drive WW	286776-B22 #0D1
	2m LC-LC multimode FC cable	221692-B21 #0D1
	5m LC-LC multimode FC cable	221692-B22 #0D1
	15M LC-LC multimode FC cable	221692-B23 #0D1
	30M LC-LC multimode FC cable	221692-B26 #0D1
	50M LC-LC multimode FC cable	221692-B27 #0D1
	42U EVA cab 60Hz	338042-B21
	42U EVA cab 50Hz	338043-B21
	36U EVA cab 60Hz	338044-B21
	36U EVA cab 50Hz	338045-B21
	22U EVA cab 60Hz	338046-B21
	22U EVA cab 50Hz	338047-B21
	HP9000 Std Rack System E25	A4900A
	HP Rack System/E, 33U, quartz color	A4901A
	HP Rack System/E, 33U, graphite color	A4901D
	HP Rack System/E, 41U, quartz color	A4902A
	HP Rack System/E, 41U, graphite color	A4902D
	HP Modular Cooling System (WW) NOTE: The purchase of HP Modular Cooling System includes 10642 G2 rack and MCS unit attached.	AF098A
	Rack 10642 42U Shock ALL	245161-B22
	Rack 10636 36U Shock ALL	245162-B22

Service and Support, HP Care Pack, and Warranty Information

Warranty

- Three-year Limited Warranty for MSA1000, Fibre Channel Cables and SFP Transceivers
- 3 years parts exchange
- 1 year labor
- 1 year on-site
- Next business day response

Options for the MSA1000 carry their own warranty. Refer to HP's Limited Warranty Statement for further details. In countries where available, your HP Limited Warranty includes Customer Self Repair warranty services. Please refer to HP's Limited Warranty Statement for further details:

http://h18006.www1.hp.com/products/storageworks/warranty.html

Products included in various Kits carry their own individual warranties.

Warranty Upgrade Options

- Response – Upgrade on-site response from next business day to same day 4 hours
- Coverage – Extend hours of coverage from 9 hours x 5 days to 24 hours x 7 days
- Duration – Select duration of coverage for a period of 1, 3, or 5 years

---

Storage Service Packages

- HP Care Pack is defined as an upgrade to the product warranty attribute, available for a specific duration and hours of coverage.
- HP Care Pack is not available for less than the product's warranty duration.
- HP Care Pack is available for sale anytime during the warranty period for most products, but the commencement date will be the same as the Warranty Start Date (delivery date to end user customer). Proof of purchase may be required.
- HP Care Pack services are prepaid.

For additional information on Product Services and HP Care Pack, as well as orderable part numbers, please refer to the URL: http://www.hp.com/hps/carepack/.
If you have specific questions about availability or how to obtain services contact your local HP representative. Contact information for your local area can be found at: http://www.hp.com/services.

Software Product Services

Software product services

Product support provides the customer access to HP's experienced technical support resources, as well as access to HP's Information Services database for support on a variety of multi-vendor/multiplatform software products. Product support includes escalation and problem coordination with the appropriate engineering group. HP Services offer a variety of options to allow you to tailor your product service to meet the needs of your organization. Basic warranty on products can be uplifted from day one to ensure you receive the service you need when you need it.

Warranty and support

HP warrants only that the software media will be free of physical defects for a period of ninety (90) days from delivery.
The following services are offered as HP Care Pack Services at the time of software product order:

- Software Technical Support 24 x 7 (1 and 3 years) is available 24 hours per day, Monday through Sunday, including holidays (includes phone-in software technical support 24 x 7 and software product and documentation updates).
- Installation Service (software installation) and Installation and Startup Service (software installation, configuration, startup testing and knowledge transfer).
- HP Care Pack services must be ordered with the product and are prepaid.
- For tailored support contracts based on personalized statement of work contact your local support center via http://www.HP.com/support.

Secure Path software services

- Software product services included with Secure Path: One year of Software Technical Support 24 x 7 HP Care Pack Services (includes phone-in software technical support 24 x 7 and software product and documentation updates).
- HP Care Pack services are available to upgrade the one year of Software Technical Support 24 x 7 included with the Secure Path product to 3 full years.
- Installation service (software installation)

For additional software product services information for North American HP Care Pack services, as well as orderable part numbers, please refer to the URLs listed below:
All storage services: http://www.hp.com/hps/storage/.
All HP Care Pack Services: http://www.hp.com/hps/carepack/storage/cp_networked.html.
Software Support HP Care Pack Services: http://www.hp.com/hps/carepack/software/cp_storage.html.
Installation and Startup Services: http://www.hp.com/hps/storage/ns_implementation.html.
If you have specific service questions contact your local HP representative. Contact information for your local area can be found at: http://www.compaq.com/support.
Maintenance releases, bug fixes and software patches are available at:
http://www.compaq.com/support/sanworks.

Array Installation and Startup Services

The HP Installation and startup for HP StorageWorks Disk Arrays service package provides installation and configuration of HP StorageWorks Disk Array products. Service highlights include:

Installation and Startup provides, installation, LUN Disk Design and configuration of the MSA 1000 which includes

- Service Planning
- Service Deployment
- Installation Verification Testing (IVT) required for this service
- Customer Orientation session

Service Deployment includes the deployment of the MSA disc array into a new or pre-existing SAN which may consist of switch, hub or SCSI bridge technology. Installation includes the customization of up to four host servers, eight host bus adapters (hba's) and up to four high availability software licenses.

NOTE: Refer to Step 7 in the Configuration Information section below for all Service, Warranty Plans, Installation and Startup Services available for the MSA1000

Step 1 – Order Required Items

HP StorageWorks Modular Smart Array 1000 — 201723-B22

Includes:

(1) MSA1000 Controller with 256 MB cache

(1) MSA Fibre Channel I/O Module with 2 Gb SFP SW Transceiver

Redundant Hot Pluggable Power Supply/blower assemblies

Universal Rack mounting Kit

MSA1000 Support CD & Documentation

Serial cable

(2) Power cables

NOTE: Fibre Channel cables are ordered separately.

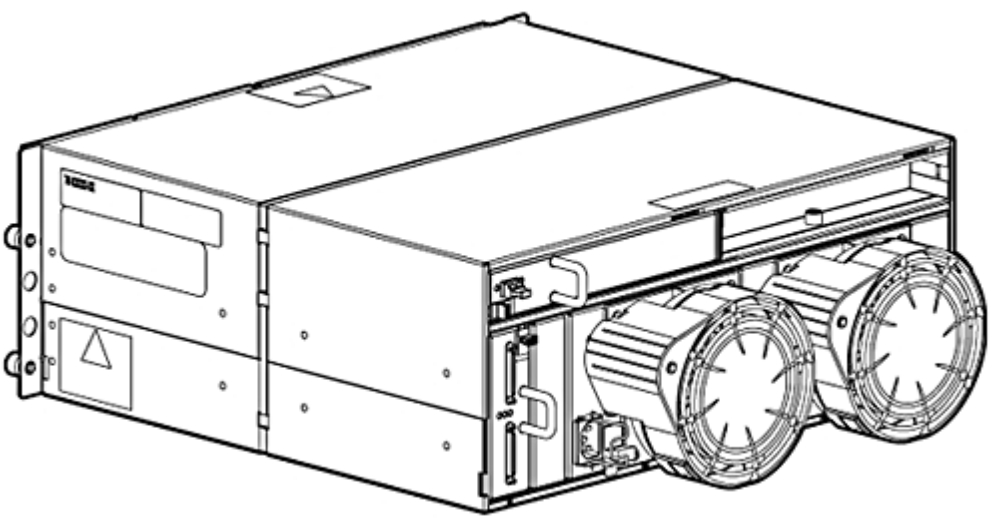

Step 2 – Choose Optional Non-Redundant MSA1000 System Options

MSA SAN Switch 2/8 (integrated) (Includes four SFPs)	288247-B21
MSA Hub 2/3 (integrated) (Includes two 2 Gb SFP transceivers) for use with 2Gb HBAs	286763-B21

NOTE: The MSA SAN Switch 2/8 has a total of eight Fibre Channel ports. There are seven ports accessible by the user and the eighth is internal to the controller. Four SFPs are shipped installed in the Switch.

The MSA Hub 2/3 has two external Fibre Channel ports, both of which already have transceivers installed. (Not supported with active/active firmware or Tru64 UNIX or OpenVMS).

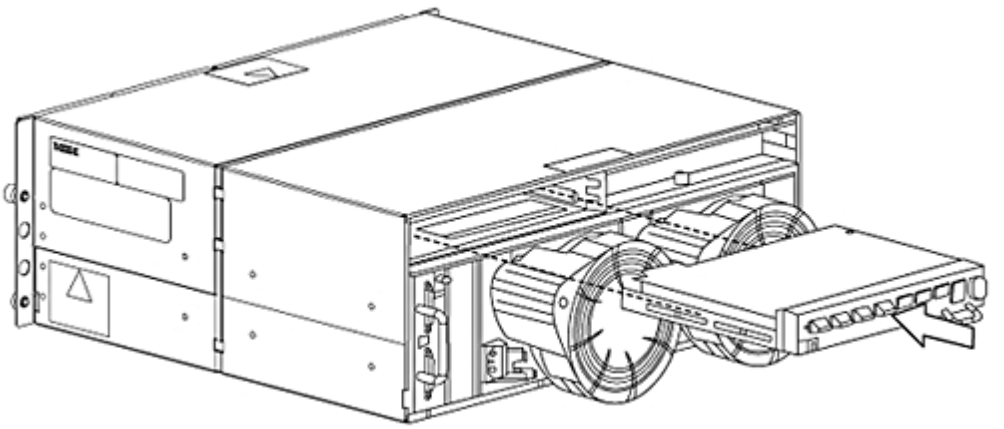

Step 3 – Choose Redundant MSA1000 System Options

MSA1000 Controller	218231-B22
256 MB Cache Modules for Controller (one additional for each controller)	254786-B21

HP StorageWorks Secure Path (appropriate model for the operating system) or choose an industry standard failover solution where available

NOTE: Redundant configurations require two Host Adapters per server, an additional controller and an I/O module, an MSA SAN Switch 2/8 or an MSA Hub 2/3 (for Windows or NetWare), and Secure Path or industry standard fail-over software for each server. An industry standard fail-over solution such as Microsoft's MPIO for Windows or the QLogic or Emulex solution for Linux may be employed in place of Secure Path. For Microsoft ProLiant Clusters, Secure Path software can be substituted with the ProLiant Clusters HA/F200 kit.

Mixing of the MSA Fibre Channel I/O Modular and the MSA SAN Switch 2/8 or the MSA Hub 2/3 is not supported. When configuring the MSA1000 for redundant controllers use either two MSA Fibre Channel I/O Modules, two MSA Hub 2/3s, or two MSA SAN Switch 2/8s.

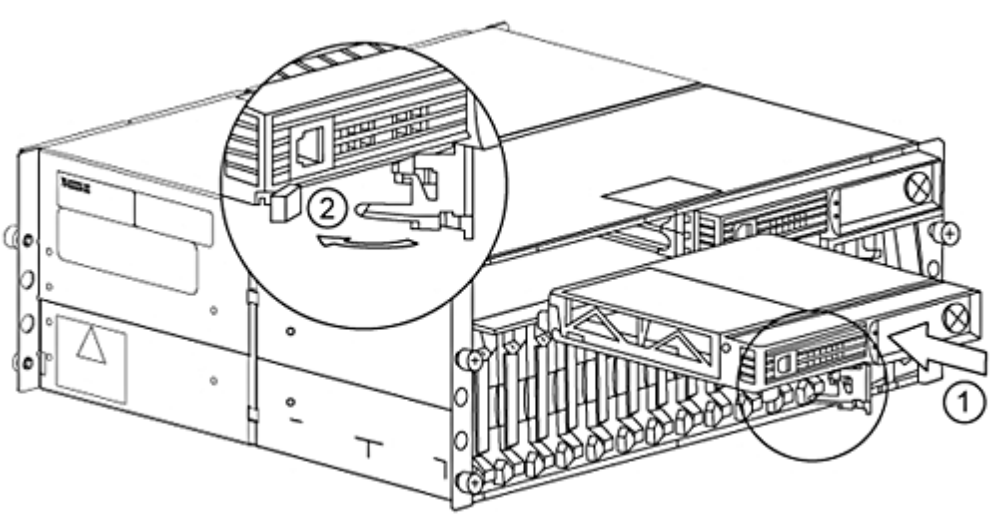

Configuration Information

Choose an interface matching your original	MSA Fibre Channel I/O Module (Includes one 2 Gb SFP transceiver)	218960-B21
	MSA SAN Switch 2/8 (integrated) (Includes four 2 Gb SFP transceivers)	288247-B21
	MSA Hub 2/3 (integrated) (Includes two 2 Gb SFP transceivers)	286763-B21

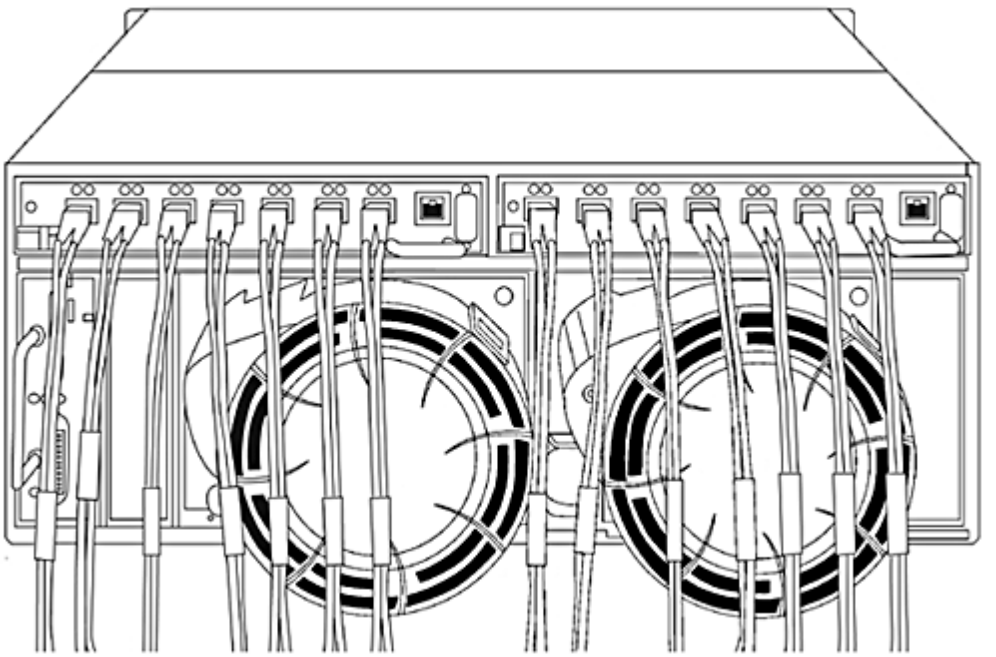

Step 4 – Choose Supported Options For 2 Gb or 1 Gb Infrastructure

4 Gb Fibre Channel Transceiver (SFP)	4 Gb SFP SW Transceiver Kit	A7446B

2 and 4Gb Fibre Channel Fabric "B-Series" family of switches	HP StorageWorks MSA SAN Switch 2/8 (embedded option for MSA1000 only) NOTE: Includes four 4Gb SFP transceivers.	288247-B21
	HP StorageWorks 4/8 Base SAN Switch 8 port 4Gb/s switch with zero e-ports	A7984A
	HP StorageWorks 4/8 SAN Switch 4Gb/s with full fabric	A8000A
	HP StorageWorks 4/16 SAN Switch	A7985A
	HP StorageWorks 4/16 SAN Switch Power Pack	A7987A
	HP StorageWorks 4/32B SAN Switch Power Pack	AG758A
	HP StorageWorks 4/32B Full SAN Switch	AG757A
	HP StorageWorks 4/32B Base SAN Switch	AG756A
	HP StorageWorks 4/8 4 port upgrade license	T4260A
	4/64 SAN Switch Power Pack 4/64 SAN Switch with 32 active ports	AE496A
	4/64 SAN Switch with 64 active ports	AG457A
	HP StorageWorks Full Fabric license	T4261A
	HP StorageWorks B-Series 8-31 port Power Pack License	T3573A
	4/64 SAN Switch with 32 active ports	AE495A

Configuration Information

	16 port upgrade license for 4/64 SAN Switch (base model) and Power Pack model	T4411A
	StorageWorks 4/256 SAN Director	A7988A
	StorageWorks 4/256 SAN Director Power Pack	A7989A
	HP StorageWorks SAN Director 4/16 Blade	A7990A
	HP StorageWorks SAN Director 4/32 Blade	A7991A
	HP StorageWorks SAN Director 4/48 Blade	AG561A
	HP StorageWorks Multi-Protocol Router Blade for B-series	AG461A
	HP StorageWorks B-Series iSCSI Blade	AG671A
	HP StorageWorks B-Series MP Router Blade	AG461A
	Power Pack Software Upgrade Bundle	330882-B21
	HP StorageWorks B-Series MP Router Blade	AG461A
	Power Pack Software Upgrade Bundle	330882-B21
	StorageWorks SAN Director Blade	AD504A
	Brocade 4Gb SAN Switch for HP p-Class BladeSystem, Base	A7533A
	Brocade 4Gb SAN Switch for HP p-Class BladeSystem, Full Fabric	A7534A
	Brocade 4Gb SAN Switch for HP p-Class BladeSystem, Power Pack	A7535A
	Brocade 4/12 SAN Switch (1) 4Gb SAN Switch; 12 ports enabled for any combination (internal and external); two (2) short wave 4Gb SFPs	AE370A
	Brocade 4/24 SAN Switch (1) 4Gb SAN Switch; 24 ports enabled (16 internal, 8 external); four (4) short wave 4Gb SFPs	AE372A
	Brocade 4/24 SAN Switch Power Pack (1) 4Gb SAN Switch; 24 ports enabled (16 internal, 8 external); four (4) short wave 4Gb SFPs	AE371A
2 and 4Gb Fibre Channel Fabric "C-Series" family of switches	MDS 9124 8-ports Active Fabric Switch	AG646A
	MDS 9124 16-ports Active Fabric Switch	AG647A
	MDS 9124 24-ports Active Fabric Switch	AG648A
	Cisco MDS 9513 4Gb Director	AE376A
	Cisco MDS 9506 4Gb Director w/Supervisor 2	AE388A
	Cisco MDS 9216i w/0 1Gb Ethernet SFPs	AE390A
	Cisco MDS 9509 4Gb Director w/Supervisor 2	AE389A
	MDS9124e Fabric Switch for HP c-Class Bladesystem; 12 ports active	AG641A
	MDS9124e Fabric Switch for HP c-Class Bladesystem; 24 ports active	AG642A
2 Gb Fibre Channel Integrated Hub	MSA Hub 2/3 (integrated option, comes with two SFPs)supports single controller or active/passive configurations only NOTE: Not for use with ProLiant Blade servers, Tru64 UNIX or OpenVMS.	286763-B21

Configuration Information

2 Gb Fibre Channel HBAs	Host adapter Q2300 2Gb 64-bit PCI-X for Linux, Integrity servers	A7538A
	Host adapter 2Gb PCI-X Dual channel for HP-UX and Linux, Integrity servers	A6826A
	HP-UX HBA: PCI 2GB Fibre Channel Adapter	A6795A
	HP PCI-X 2-port 2Gb Fibre Channel and 2-port 1Gb Ethernet / Windows	AB465A
	HP-UX HBA: PCI-X 2Gb Fibre Channel/1000Base-T	A9784A
	HP-UX HBA: PCI-X 2Gb Fibre Channel/1000Base-SX	A9782A
	FCA2684 PCI-X Single Channel 2Gb Host Adapter for OpenVMS & Tru64 UNIX AlphaServers	DS-A5132-AA
	FCA2684DC PCI-X Dual Channel 2Gb Host Adapter for OpenVMS & Tru64 UNIX AlphaServers	DS-A5134-AA
4 Gb Fibre Channel HBAs	HP StorageWorks FC2142SR HBA 4Gb PCI-e for Windows, Linux	A8002A
	HP StorageWorks FC2242SR DC HBA 4Gb PCI-e for Windows, Linux	A8003A
	HP StorageWorks FC1142 4Gb PCI-e HBA for Windows, Linux	AE311A
	HP StorageWorks FC1242 4Gb PCI-e DC HBA for Windows, Linux	AE312A
	HP StorageWorks FC2143 4Gb PCI-X 2.0 HBA for Windows, Linux	AD167A
	HP StorageWorks FC2243 4Gb PCI-X 2.0 DC HBA for Windows, Linux	AD168A
	HP StorageWorks FC1143 4Gb PCI-X 2.0-to-Fibre Channel Host Bus Adapter for x86, x64 and ia64 Windows and Linux.	AE369A
	HP StorageWorks FC1243Dual Channel 4 Gb PCI-X 2.0-to-Fibre Channel Host Bus Adapter for x86, x64 and ia64 Windows and Linux.	AB429A
	HP-UX PCI-X single-channel, 4Gb fibre channel adapter	AB378A
	HP-UX PCI-X dual-port, 4Gb fibre channel adapter	AB379A
HBA for Small Business G2 Kit	HP QLE220 4/2 Gb, 32-Bit/133 MHz PCI-e Fibre Channel Host Bus Adapter NOTE: This is a single channel HBA ONLY for use with the MSA1000 Small Business SAN G2 Kit	AG527A
Fibre Channel Cables for 2 or 4Gb Infrastructure	Use 2 Gb Fibre Channel cables when connecting the MSA Fibre Channel I/O Module, MSA Hub 2/3 or the MSA SAN Switch 2/8 to an HBA	
	2 m LC-LC Multi-Mode Fibre Channel Cable	221692-B21
	5 m LC-LC Multi-Mode Fibre Channel Cable	221692-B22
	15 m LC-LC Multi-Mode Fibre Channel Cable	221692-B23
	30 m LC-LC Multi-Mode Fibre Channel Cable	221692-B26
	50 m LC-LC Multi-Mode Fibre Channel Cable	221692-B27
MSA Controller management cable	One ships standard. Orderable through HP Store or Service if original is lost	316131-001

Configuration Information

Step 5 – Choose Hard Drives & StorageWorks Enclosures

Hard Drives	72.8 GB Pluggable Ultra320 Universal Hard Drive, 10,000 rpm (1") Up to 14 per MSA30 enclosure	286714-B22
	146.8 GB Pluggable Ultra320 Universal Hard Drive, 10,000 rpm (1") Up to 14 per MSA30 enclosure	286716-B22
	300 GB Pluggable Ultra320 Universal Hard Drive, 10,000 rpm (1") Up to 14 per MSA30 enclosure	350964-B22
	36.4 GB Pluggable Ultra320 Universal Hard Drive, 15,000 rpm (1") Up to 14 per MSA30 enclosure	286776-B22
	72.8 GB Pluggable Ultra320 Universal Hard Drive, 15,000 rpm (1") Up to 14 per MSA30 enclosure	286778-B22
	146.8 GB Pluggable Ultra320 Universal Hard Drive, 15,000 rpm (1") Up to 14 per MSA30 enclosure	347708-B22
	HP 300GB Pluggable Ultra320 Universal Hard Drive, 15,000 rpm (1") Up to 14 per MSA30 enclosure	411089-B22
	NOTE: All Ultra320 Universal Hard Drives are backward compatible to U2 or U3 speeds.	
	NOTE: For complete compatibility information, refer to the HP SCSI Hard Drive Compatibility table located at http://www.hp.com/go/msa1000.	

StorageWorks Enclosures	The MSA1000 cabinet holds fourteen 1" Universal Drives. Add one StorageWorks Enclosure to increase capacity up to 28 drives. Add two HP StorageWorks Enclosures to increase capacity up to the maximum of 42 drives.	
	MSA30 single bus enclosure NOTE: Maximum of two can be connected to the MSA1000.	302969-B21
	MSA30 dual bus enclosure NOTE: Maximum of one can be connected to the MSA1000.	302970-B21

Step 6 – Choose Rack Options

Rack Cabinet, Customer Assembled	
5642 - 5000 Series rack	358254-B21
14U rack	
HP S10614 Rack with Shock Pallet	292302-B22
Rack Cabinets 10622 G2	
10622 G2 Universal Rack w/Shock Pallet	AF022A
10622 G2 Universal Rack w/Standard Pallet	AF021A
Rack Cabinets under 10636 G2	
10636 G2 (36U) Rack Cabinet - Pallet	AF011A
10636 G2 (36U) Rack Cabinet - Shock Pallet*	AF012A
10636 G2 (36U) Rack Cabinet - Crated	AF013A
10636 G2 (36U) Rack Cabinet, with Extension - Shock Pallet*	AF014A
Rack Cabinets 10642 G2	
10642 G2 (42U) Rack Cabinet - Pallet	AF001A
10642 G2 (42U) Rack Cabinet - Shock Pallet*	AF002A

10642 G2 (42U) Rack Cabinet - Crated	AF003A
10642 G2 (42U) Rack Cabinet, with Extension - Shock Pallet*	AF004A
Rack Cabinets 10842 G2	
10842 G2 Universal Rack w/Shock Pallet	AF042A
10842 G2 Universal Rack w/Standard Pallet	AF041A
Rack Cabinets 10647 G2	
10647 Rack G2 Pallet	AF031A
For units that are factory installed	
10622 G2 Universal Rack w/Shock Pallet	AF022A
10636 G2 (36U) Rack Cabinet - Shock Pallet*	AF012A
10636 G2 (36U) Rack Cabinet, with Extension - Shock Pallet*	AF014A
10642 G2 (42U) Rack Cabinet - Shock Pallet*	AF002A
10642 G2 (42U) Rack Cabinet, with Extension - Shock Pallet*	AF004A
10842 G2 Universal Rack w/Shock Pallet	AF042A
HP Modular Cooling System (WW) CTO ready	AF098A
Rail Kit for mounting in a M-Series rack	313877-B21

Step 7 – Choose HP Care Pack Services

Hardware Product Services	9x5, Next Business Day, On-Site Coverage, 3 years	103840-002
	9x5, 4-Hour Response, On-Site Coverage, 3 years	402165-002
	24x7, 4-Hour Response, On-Site Coverage, 3 years	402164-002
	9x5, Next Business Day, On-Site Coverage, 5 years	170183-002
	9x5, 4-Hour Response, On-Site Coverage, 5 years	170185-002
	24x7, 4-Hour Response, On-Site Coverage, 5 years	170187-002
	Hardware Installation	402162-002
	Fixed Price Care Pack Part Numbers:	
	1 Yr Same Day 24x7/Onsite	UC761A/E
	1 Yr Same Day 13x5/Onsite	UC772A/E
	1 Yr Same Day 6 hr CTR	UC773A/E
	3 Yr next Day/Onsite	U6355A/E
	3 Yr 13x5 Same Day/Onsite	U6356A/E
	3 Yr 24x7 Same Day/Onsite	U6357A/E
	3 Yr 6 hr CTR	U9934A/E
	4 Yr 13x5 Same Day/Onsite	U9398A/E
	4 Yr 24x7 Same Day/Onsite	U9399A/E
	5 Yr 13x5 Same Day/Onsite	U9400A/E
	5 Yr 24x7 Same Day/Onsite	U9401A/E
	Hardware Installation	U4368A/E
	Installation and Startup	UA868A/E
	Flexible Care Pack Part Numbers:	
	Support – MSA1000, 1 Yr ND Hardware	HA101A1-6FG
	Support – MSA1000, 3 Yr ND Hardware	HA101A3-6FG
	Support – MSA1000, 1 Yr 4h 13x5 Hardware	HA103A1-6FG

Support – MSA1000, 3 Yr 4h 13x5 Hardware	HA103A3-6FG
Support – MSA1000, 1 Yr 4h 24x7 Hardware	HA104A1-6FG
Support – MSA1000, 3 Yr 4h 24x7 Hardware	HA104A3-6FG
Support – MSA1000, 1 Yr 6 hr CTR	HA105A1-6FG
Support – MSA1000, 3 Yr 6 hr CTR	HA105A3-6FG
Support – MSA1000, 1 Yr Support Plus	HA109A1-6FG
Support – MSA1000, 3 Yr Support Plus	HA109A3-6FG
Support – MSA1000, 1 Yr Support Plus 24	HA110A1-6FG
Support – MSA1000, 3 Yr Support Plus 24	HA110A3-6FG
Support – MSA1000, 1 Yr Proactive 24	HA111A1-6FG
Support – MSA1000, 3 Yr Proactive 24	HA111A3-6FG
Support – MSA1000, 1 Yr Critical Service	HA112A1-6FG
Support – MSA1000, 3 Yr Critical Service	HA112A3-6FG

Configuration Examples

Two Node Redundant Cluster Solution (Intel based servers)

Quantity	Description	Part Number
1	HP StorageWorks Modular Smart Array 1000	201723-B22
1	Additional MSA1000 Controller	218231-B22
2	MSA Hub 2/3	286763-B21
4	Host Adapter (appropriate model for operating system)	
4	2 m LC-LC Multi-Mode Fibre Channel Cable	221692-B21
1	ProLiant Cluster HA/F200 for MSA1000 (includes Secure Path for two servers)	364026-B21
14	36.4 GB Pluggable Ultra320 Universal Hard Drive, 15K	286776-B21

4 Host, 6TB, Redundant SAN Solution (Intel based servers)

Quantity	Description	Part Number
1	HP StorageWorks Modular Smart Array 1000	201723-B22
1	Additional MSA1000 Controller	218231-B22
2	256 MB Cache Modules for Controller (one additional for each controller)	254786-B21
2	MSA SAN Switch 2/8 (Includes four 2 Gb SFP transceivers)	288247-B21
8	Host Adapter (appropriate model for operating system)	
8	2 m LC-LC Multi-Mode Fibre Channel Cable	221692-B21
4	Secure Path Workgroup Edition (1 license per server), appropriate for operating system	
2	HP StorageWorks Enclosure MSA30	190209-001
42	146.8 GB Pluggable Ultra320 Universal Hard Drive, 10,000 rpm (1")	286716-B22

Related Options

Secure Path v3.0C for NetWare Workgroup Edition	Secure Path v3.0C for NetWare Workgroup Edition one license	222411-B22
	Secure Path v3.0C for NetWare Workgroup Edition five licenses	231324-B22
	Secure Path v3.0C for NetWare Workgroup Edition 10 licenses	231325-B22
	Secure Path v3.0C for NetWare Workgroup Edition 25 licenses	231326-B22
	Secure Path v3.0C for NetWare Workgroup Edition 50 licenses	231327-B22
	NOTE: Refer to http://www.hp.com/go/securepath for the latest Secure Path parameters for NetWare.	
Secure Path v4.0C for Windows Workgroup Edition (including Windows Server 2003/32bit and 64-bit)	(Package includes separate programs for both the MSA1000 and the RA4000 and RA41000 solutions.)	
	Secure Path v4.0C for Windows Workgroup one license	213076-B26
	Secure Path v4.0C for Windows Workgroup Edition five licenses	231316-B26
	Secure Path v4.0C for Windows Workgroup Edition 10 licenses	231317-B26
	Secure Path v4.0C for Windows Workgroup Edition 25 licenses	231318-B26
	Secure Path v4.0C for Windows Workgroup Edition 50 licenses	231319-B26
	Secure Path v4.0C for Windows Workgroup Edition Upgrade License	261715-B24
	Secure Path v4.0C for Windows Workgroup Edition for ProLiant BL line 8 licenses	325634-B23
	NOTE: Refer to http://www.hp.com/go/securepath for the latest Secure Path parameters for Windows.	
Secure Path v3.0C for Linux Workgroup Edition	Secure Path v3.0C for Linux Workgroup Edition one license	T3581A
	Secure Path v3.0C for Linux Workgroup Edition five licenses	T3582A
	Secure Path v3.0C for Linux Workgroup Edition 10 licenses	T3584A
	Secure Path v3.0C for Linux Workgroup Edition for ProLiant BL line 8 licenses	T3583A
	Secure Path v3.0C for Linux Workgroup Edition 25 licenses	T3585A
	Secure Path v3.0C for Linux Workgroup Edition 50 licenses	T3586A
	NOTE: Refer to http://www.hp.com/go/securepath for the latest Secure Path parameters for Linux.	
Backup and Restore Software	VERITAS NetBackup for Windows	
	VERITAS Backup Exec for Windows	
	HP Data Protector	
	Computer Associates BrightStor Enterprise Backup	
	NOTE: See Implementation Blueprint for configuration and installation instructions for all backup and restore software.	
ProLiant Cluster for MSA1000	ProLiant Cluster Starter kit (no Secure Path)	364023-B21
	ProLiant Cluster F200 for the Entry Level SAN	364026-B21
	ProLiant Cluster F200 for the Entry Level SAN (Japan)	364026-291

Technical Specifications

Modular Smart Array 1000 (MSA1000)	**LED Indicators on Front** (3)	Power	
		Fault detected in one or more sub-systems	
		Fault in Enclosure Management	
	LED Indicators for Drive Modules (3)	Drive Access (center)	
		Online (left)	
		Drive Failure (right)	
	LED Indicators on Rear Panel (4)	Power Supply/Blower Assembly Fault (1)	
		EMU (3) Power, A bus, B bus	
	Interface	Ultra3 SCSI to Hard Drives	
		2 Gb Fibre Channel to Hosts	
	Maximum Number of Drives	Fourteen, 1-inch HP Ultra2, Ultra3 or Ultra 320 Universal Hard Drives (msa1000 Cabinet); expandable to 42 using two additional HP StorageWorks 4200/4300 Enclosures	
	Temperature Range	**Operating**	50° to 95° F (10° to 35° C), up to 8000'
		Shipping	-22° to 122° F (-30° to 50° C)
			NOTE: Derated 1°C per 1,000 feet of elevation to 10,000 ft.
	Relative Humidity	**Operating**	10% to 90%
		Non-operating	Up to 95%
	Input Power Requirements	**Rated Input Voltage**	100 to 240 VAC
		Rated Input Frequency	50 to 60 Hz
		Rated Input Current	6 A Max
		Input Power (max)	549 W*
		The supply will handle 90Vrms - 254 Vrms (100 - 240 V, +6%, -10%) Frequency is 47 - 63 Hz	
	Heat Dissipation (max)	1876 Btu/hr*	
		NOTE: Input Power and Heat Dissipation specifications are maximum values and apply to worst-case conditions at full rated power supply load. The power/heat dissipation for your installation will vary depending on the equipment configuration.	
	MSA1000 Cabinet	4U Rack Form Factor	
		Dimensions (H x W x D)	6.9 x 19 x 20.5 in (17.5 x 48.3 x 52.1 cm)
		Weight	Net 55 to 85 lb (24.95 to 38.56 kg)
	Shipping Packaging	**Dimensions** (L x W x D)	28.5 x 14.81 x 33.13 in (72.4 x 37.6 x 84.1 cm)
		Weight (Gross)	75 to 105 lb (34.02 to 47.63 kg)
	User Interface	Controller display with Status Indicators (2) and push buttons (4) on front of controller	
	Electrical Interface	LVD (Low Voltage Differential)	
	Protocol Support	Wide Ultra3 SCSI	
	SCSI Ports	4-channel: 2 internal, 2 external	
	Drives Supported	Up to 42 drives	
	Maximum Capacity	12TB (42 drives x 300GB)	
	Logical Drives (LUN)	Up to 32 Logical Drives	

	Maximum Logical Drive size	2.0TB	
Modular SAN Array 1000 Controller (218231-B22)	User Interface	Controller Display with Status Indicators (2) and Push Buttons (4) Status Indicators on front of Controller (16)	
	Electrical Interface	LVD (Low Voltage Differential)	
	Protocol Support	Wide Ultra3 SCSI	
	SCSI Ports	4-channel: 2 external/2 Internal	
	Drives Supported	Up to 42 drives	
	Maximum Capacity	12TB (42 drives x 300GB)	
	Logical Drives	Up to 32 logical drives	
	RAID Support	RAID ADG (Advanced Data Guarding) RAID 5 (Distributed Data Guarding) RAID 1+0 (Striping & Mirroring) RAID 0 (Striping)	
	Cache Memory	Up to 512 MB Read/Write (256 MB modules). If redundant controllers are used they must have equally configured cache ECC protection, battery-backed, and removable Standard as of November 19, 2002: 256 MB cache memory (single module)	
	Cache Batteries	Enables transportable cache; removable for easy replacement	
	Upgradeable Firmware	2 MB flashable ROM	
	Disk Drive and Enclosure Protocol Support	HP Ultra 320, Ultra3, and Ultra2 SCSI 1-inch Universal drives	
	Packaging	**Dimensions** (L x W x D)	17 x 12.5 x 7.75 in (43.2 x 31.75 x 19.7 cm)
		Weight (Gross)	6 lb (2.72 kg)
Modular SAN Array Fibre Channel I/O Module (218960-B21)	Connector Type	LC	
	Number of Fibre Channel Ports	One 2 Gb Fibre Channel Port using removable Small-Form-Factor-Pluggable Transceiver (SFP)	
	Bandwidth	200 MB/s	
	Operation Modes	Fibre Channel Class 2 and 3 connectionless service	
	Protocols Supported	Fibre Channel	
	Packaging	**Dimensions** (L x W x D)	17 x 12.5 x 7.75 in (43.2 x 31.75 x 19.7 cm)
		Weight (Gross)	6 lb (2.72 kg)

Technical Specifications

MSA SAN Switch 2/8 (288247-B21)	Performance	2.125 Gbit/sec line speed, full duplex ;1.063 Gbit/sec line speed, full duplex; Auto-sensing of 1 Gbit/sec and 2 Gbit/sec port speeds; optionally programmable to fixed port speed; Speed matching between 1 Gbit/sec and 2 Gbit/sec ports Aggregate bandwidth 64 Gbit/sec end to end Fabric latency <2.1 μsec with no contention, cut-through routing at 2 Gbit/sec	
	Interoperability	All HP StorageWorks B-series switches	
	Switch bandwidth	32 Gbit/sec end to end	
	Maximum frame size	2112-byte payload	
	Port types	8 ports universal (one internal, seven external), FL_Port, F_Port, and E_Port; self-discovery based on switch type (U_Port)	
	Media types	Small form-factor pluggable (SFP) four included standard; short wavelength (SWL) up to .31 mi (500m), long wavelength (LWL) up to 21 mi (35 km); distance depends on fiber-optic cable and port speed	
	Classes of service	Class 2, Class 3, Class F (inter-switch frames)	
	Management access	10/100 Ethernet port (RJ-45); Serial port (RS-232)	
	Management	Advanced Web Tools included; Fabric Manager (optional) Management access In-band via Management Server.	
	Security	Fabric security for configuration management, SAN access, and authentication/authorization	
	Supported software	Telnet, SNMP, WEBTOOLS, Zoning, Fabric Watch, Extended Fabrics, Remote Switch, Trunking, Advanced Performance Monitoring	
	Fabric services	Simple Name Server, Registered State Change Notification (RSN), Alias Server (multicast); and Zoning, WEB TOOLS. Optional QuickLoop, Fabric Watch, Extended Fabrics, and Remote Switch, Trunking, Advanced Performance Monitoring	
	Diagnostics	Diagnostics POST and embedded online/offline diagnostics	
	Dimensions (h x w x d)	SAN Switch 2/8: 7.75 x 12.5 x 17 in (19.68 x 31.75 x 43.18 cm)	
	Shipping	6 lb (2.72.kg)	
	Humidity range	5% to 85% non-condensing at 104° F (40° C)	
	Environment	Temperature	Operating: 32° F to 104° F (0° C to 40° C)
			Non-operating: -31° F to 147° F (-25° C to 70° C)
		Vibration	Operating: 0.5 G p-p, 5-500 Hz
			Non-operating: 2.0 G p-p, 5-500 Hz
	Connector Type	LC	
	Protocol	SCSI, IP	
	Data Transfer Method	64-bit/66 MHz PCI	
	Maximum Transfer Rate	200 MB	
	Packaging	Dimensions (L x W x D)	11 x 8.5 x 3 in (27.9 x 21.6 x 7.6 cm)
		Weight (Gross)	1 lb (0.45 kg)

Technical Specifications

Multi-Mode Fibre Channel Cables Kits (218960-B21)	Cable Type	LC-LC (2 Gb to 2 Gb connections) and LC-SC (2 Gb to 1 Gb connections) 50 Micron multi-mode Fiber	
	Available Cable Lengths	6.5 ft, 16.4 ft, and 49.2 ft (2 m, 5 m, and 15 m)	
	Packaging	Dimensions (L x W x D)	11.5 x 9 x 1.5 in (29.2 x 22.8 x 3.8 cm)
		Weight (Gross)	0.75 to 1 lb (0.34 to 0.45 kg)

© Copyright 2007 Hewlett-Packard Development Company, L.P.

The information contained herein is subject to change without notice.

Microsoft and Windows NT are US registered trademarks of Microsoft Corporation. Intel is a US registered trademark of Intel Corporation. Unix is a registered trademark of The Open Group.

The only warranties for HP products and services are set forth in the express warranty statements accompanying such products and services. Nothing herein should be construed as constituting an additional warranty. HP shall not be liable for technical or editorial errors or omissions contained herein.

For hard drives, 1 GB = 1 billion bytes. Actual formatted capacity is less.