HPE Apollo 4200 Gen10 Server - Product Information Reference

Part Number:
Published:
Edition:

HPE Apollo 4200 Gen10 Server - Product Information Reference

Abstract

Part Number:
Published:
Edition:

© Copyright –

Notices

The information contained herein is subject to change without notice. The only warranties for Hewlett Packard Enterprise products and services are set forth in the express warranty statements accompanying such products and services. Nothing herein should be construed as constituting an additional warranty. Hewlett Packard Enterprise shall not be liable for technical or editorial errors or omissions contained herein.

Confidential computer software. Valid license from Hewlett Packard Enterprise required for possession, use, or copying. Consistent with FAR 12.211 and 12.212, Commercial Computer Software, Computer Software Documentation, and Technical Data for Commercial Items are licensed to the U.S. Government under vendor's standard commercial license.

Links to third-party websites take you outside the Hewlett Packard Enterprise website. Hewlett Packard Enterprise has no control over and is not responsible for information outside the Hewlett Packard Enterprise website.

Acknowledgments

Intel®, Itanium®, Optane™, Pentium®, Xeon®, Intel Inside®, and the Intel Inside logo are trademarks of Intel Corporation in the U.S. and other countries.

AMD and the AMD EPYC™ and combinations thereof are trademarks of Advanced Micro Devices, Inc.

Microsoft® and Windows® are either registered trademarks or trademarks of Microsoft Corporation in the United States and/or other countries.

Adobe® and Acrobat® are trademarks of Adobe Systems Incorporated.

Java® and Oracle® are registered trademarks of Oracle and/or its affiliates.

UNIX® is a registered trademark of The Open Group.

All third-party marks are property of their respective owners.

Revision history

Part number	Publication date	Edition	Summary of changes

Table of contents

Overview

- Summary 6
  - Product description 6
  - What's new 6
- Standard Models 7
  - New RoHS compliant part numbers 7
  - Standard models 8
- Product features 8

Specifications

- Specifications 20
  - Physical specifications 20
  - Environmental specifications 21
  - Electrical specifications 22
  - Safety certifications 23

Compatibility/Supportability

- Spare Parts 23
  - New model specific parts lists 24
  - Mechanical components 24
  - System components 27
  - System options 34
- Option Parts 45
  - New model specific parts lists 46
  - HPSD BlueDataApollo 4200 46
  - Processor 47
  - Memory 50
  - Power supplies 52
  - Additional FIO 53
  - Factory integration from core 53
  - HPE Unique options 54
  - Storage controller enablement kit 56
  - Security 56
  - HPE Drives 56
  - Networking 72
  - InfiniBand 73

Pensando Distributed Services Platform (DSP)..... 74
Embedded management..... 75
Converged infrastructure management software..... 76
PCIe workload accelerator..... 77
Storage controllers..... 78
Optional software..... 79
Storage options..... 79
Rack..... 80
HPE USB and SD options..... 80
OS Compatibility..... 81
Software Compatibility..... 82
Useful links..... 82

Summary

Subtopics

Product description
What's new

Product description



HPE Apollo 4200 Gen10 Server offers an architecture optimized for big data analytics, Software-Defined storage, backup and archive and other data storage intensive workloads. Its unique, easily serviceable 2U design saves data center space with up to 28 Large Form Factor (LFF) or 54 Small Form Factor (SFF) Hot-Plug drives. It delivers accelerated performance with a superior bandwidth and balanced architecture, Intel Xeon scalable processor family and Non-Volatile Memory express (NVMe) connected Solid State Drives (SSDs).

What's new

- The new HPE NS204i-p OS boot device is a dedicated hardware RAID1 solution that enables automatic Operating System (OS) mirroring on the two included M.2 NVMe SSDs.

- Support for Intel Xeon Scalable processor family, including R series and HPE DDR4 SmartMemory up to 2933/2666 MT/s.
- Optional rear storage upgrade to support up to 6 SFF NVMe SSDs.
- Higher bandwidth and more balanced system architecture design and without trade-offs between drive bays and I/O slots.
- Firmware-level security and optional chassis intrusion options.
- Flexible HPE Smart Array Gen10 controllers support and encryption features to meet different performance requirements for storage solutions.
- Sort for daisy-chaining of out-of-band management network ports.
- Support for HPE Smart Array P824i-p MR Gen10 12G SAS Peripheral Component Interconnect express (PCIe) controller.
- New HPE Persistent memory 128GB/256GB/512GB 2666 featuring Intel optane DC persistent memory.
- Support for HPE 16TB SAS and SATA Business Critical 7.2K Hard Disk Drives (HDDs) increases the maximum raw capacity to 448TB
- Support for HPE Very Read Optimized (VRO) SATA SFF and LFF SSDs. VRO SSDs are QLC NAND-based and have variable endurance levels optimized to certain workloads that are very read-centric. In those cases, VRO drives can act as HDD replacements for environments looking to standardize on flash storage.
- The new Pensando Distributed Services Platform (DSP) for HPE systems delivers a powerful and scalable suite of software-defined network and security services like firewall, micro-segmentation and telemetry to the server edge, where the transition between network and server occurs.

Standard Models

Subtopics

New RoHS compliant part numbers
Standard models

New RoHS compliant part numbers

To find the latest RoHS compliance information, please use the HPE PartSurfer (**Click here to visit HPE PartSurfer website**) and click on one of the linked model numbers. When locating RoHS information in PartSurfer, you can use the Option part number for the components, the sales order number for a system that the component is used in, or the Spare part number for a specific part. You can find the sales order numbers and Option part numbers in the Product QuickSpecs.

Standard models

Description	Part Number
HPE Apollo 4200 Gen10 24LFF Configure-to-order Server	P07244-B21 **Click here to obtain parts list for this model**.
HPE Apollo 4200 Gen10 24LFF Configure-to-order Server	P07246-B21 **Click here to obtain parts list for this model**.

Product features

Feature	Description
Processors	Processors - Up to 2 of the following depending on model:

Intel Xeon Models	CPU Frequency	Cores	L3 Cache	Power	UPI	DDR4	Memory per socket
Platinum Processors							
Platinum 8276 Processor	2.2 GHz	28	38.50MB	165 W	3 @ 10.4 GT/s	2933 MT/s	1TB

Feature	Description							
	Intel Xeon Models	**CPU Frequency**	**Cores**	**L3 Cache**	**Power**	**UPI**	**DDR4**	**Memory per socket**
	Platinum 8260 Processor	2.4 GHz	24	35.75MB	165 W	3 @ 10.4 GT/s	2933 MT/s	1TB
	Platinum 8160 Processor	2.1 GHz	24	33.00MB	150 W	3 @ 10.4 GT/s	2666 MT/s	768GB
	Gold Processors							
	Gold 6240R Processor	2.4 GHz	24	35.75MB	165 W	2@ 10.4 GT/s	2933 MT/s	1TB
	Gold 6238R Processor	2.2 GHz	28	38.50MB	165 W	2@ 10.4 GT/s	2933 MT/s	1TB
	Gold 6230R Processor	2.1 GHz	26	35.75MB	150 W	2@ 10.4 GT/s	2933 MT/s	1TB
	Gold 6226R Processor	2.9 GHz	16	22.00MB	150 W	2@ 10.4 GT/s	2933 MT/s	1TB
	Gold 6252 Processor	2.1 GHz	24	35.75MB	150 W	3 @ 10.4 GT/s	2933 MT/s	1TB
	Gold 6248 Processor	2.5 GHz	20	27.50MB	150 W	3 @ 10.4 GT/s	2933 MT/s	1TB
	Gold 6242 Processor	2.8 GHz	16	22.00MB	150 W	3 @ 10.4 GT/s	2933 MT/s	1TB
	Gold 6240 Processor	2.6 GHz	18	24.75MB	150 W	3 @ 10.4 GT/s	2933 MT/s	1TB

Feature	Description							
	Intel Xeon Models	**CPU Frequency**	**Cores**	**L3 Cache**	**Power**	**UPI**	**DDR4**	**Memory per socket**
	Gold 6238 Processor	2.1 GHz	22	30.25MB	140 W	3 @ 10.4 GT/s	2933 MT/s	1TB
	Gold 6234 Processor	3.3 GHz	8	24.70MB	130 W	3 @ 10.4 GT/s	2933 MT/s	1TB
	Gold 6230 Processor	2.1 GHz	20	27.50MB	125 W	3 @ 10.4 GT/s	2933 MT/s	1TB
	Gold 6226 Processor	2.7 GHz	12	19.25MB	125 W	3 @ 10.4 GT/s	2933 MT/s	1TB
	Gold 6148 Processor	2.4 GHz	20	27.50MB	150 W	3 @ 10.4 GT/s	2666 MT/s	768GB
	Gold 6140 Processor	2.3 GHz	18	24.75MB	140 W	3 @ 10.4 GT/s	2666 MT/s	768GB
	Gold 6134 Processor	3.2 GHz	8	24.75MB	130 W	3 @ 10.4 GT/s	2666 MT/s	768GB
	Gold 6132 Processor	2.6 GHz	14	19.25MB	140 W	3 @ 10.4 GT/s	2666 MT/s	768GB
	Gold 6130 Processor	2.1 GHz	16	22.00MB	125 W	3 @ 10.4 GT/s	2666 MT/s	768GB
	Gold 5220R Processor	2.2 GHz	24	35.75MB	150 W	2 @ 10.4 GT/s	2666 MT/s	1TB
	Gold 5218 Processor	2.3 GHz	16	22.00MB	125 W	2 @ 10.4 GT/s	2666 MT/s	1TB

Feature	Description							
	Intel Xeon Models	**CPU Frequency**	**Cores**	**L3 Cache**	**Power**	**UPI**	**DDR4**	**Memory per socket**
	Gold 5220 Processor	2.2 GHz	18	24.75MB	125 W	2 @ 10.4 GT/s	2666 MT/s	1TB
	Gold 5218 Processor	2.3 GHz	16	22.00MB	125 W	2 @ 10.4 GT/s	2666 MT/s	1TB
	Gold 5215 Processor	2.5 GHz	10	13.75MB	85 W	2 @ 10.4 GT/s	2666 MT/s	1TB
	Gold 5118 Processor	2.3 GHz	12	16.50MB	105 W	2 @ 10.4 GT/s	2400 MT/s	768GB
	Silver Processors							
	Silver 4215R Processor	3.2 GHz	8	11.00MB	130 W	2 @ 9.6 GT/s	2400 MT/s	1TB
	Silver 4214R Processor	2.4 GHz	12	16.50MB	100 W	2 @ 9.6 GT/s	2400 MT/s	1TB
	Silver 4210R Processor	2.4 GHz	10	13.75MB	100 W	2 @ 9.6 GT/s	2400 MT/s	1TB
	Silver 4216 Processor	2.1 GHz	16	22.00MB	100 W	2 @ 9.6 GT/s	2400 MT/s	1TB
	Silver 4215 Processor	2.5 GHz	8	11.00MB	85 W	2 @ 9.6 GT/s	2400 MT/s	1TB
	Silver 4214 Processor	2.2 GHz	12	16.50MB	85 W	2 @ 9.6 GT/s	2400 MT/s	1TB

Feature	Description

Intel Xeon Models	CPU Frequency	Cores	L3 Cache	Power	UPI	DDR4	Memory per socket
Silver 4210 Processor	2.2 GHz	10	13.75MB	85 W	2 @ 9.6 GT/s	2400 MT/s	1TB
Silver 4208 Processor	2.1 GHz	8	11.00MB	85 W	2 @ 9.6 GT/s	2400 MT/s	1TB
Silver 4116 Processor	2.1 GHz	12	16.50MB	85 W	2 @ 9.6 GT/s	2400 MT/s	768GB
Silver 4114 Processor	2.2 GHz	10	13.75MB	85 W	2 @ 9.6 GT/s	2400 MT/s	768GB
Silver 4110 Processor	2.1 GHz	8	11.00MB	85 W	2 @ 9.6 GT/s	2400 MT/s	768GB

Form factor	2U rack
Chassis types [1]	• 24 LFF • 48 SFF
System fans	10 system fans shipped as default
Chipset [6]	Intel C621 chipset
On system management chipset [7]	HPE Integrated Lights-Out 5 (HPE iLO) Application-Specific Integrated Circuit (ASIC).
System board	HPE ProLiant XL420 Gen10 server

Feature	Description					
Memory [8]	**Type**	HPE DDR4 SmartMemory Registered Dual In-Line Memory Module (RDIMM), Load Reduced Dual In -Line Memory Module (LRDIMM)				
	Dual In-line Memory Module (DIMM) slots available	16	8 DIMM slots per processor, 6 channels per processor, 2-1-1 deployment			
	Maximum capacity (LRDIMM)	2.0 TB	16 x 128GB LRDIMM - 2933 MT/s			
	Maximum capacity (RDIMM)	1.0TB	16 x 64GB RDIMM - 2933 MT/s			
	Maximum capacity (HPE Persistent Memory)	512GB per processor/socekt				
Memory protection	**Advanced ECC**	Advanced ECC uses single device data correction to detect and correct single and all multibit error that occurs within a single DRAM chip.				
	Online spare	Memory online spare mode detects a rank that is degrading and switches operation to the spare rank.				
Expansion slots	**Default expansion slots**					
	Expansion Slots #	**Technology**	**Bus Width**	**Connector Width**	**Processor**	**Slot Form Factor**
	1	PCIe 3.0	x16	x16	CPU1	Low profile
	2	PCIe 3.0	x24	x24	CPU1	Low profile
	5	PCIe 3.0	x8	x8	CPU2	Low profile
	6	PCIe 3.0	x24	x24	CPU2	Low profile
	7	PCIe 3.0	x16	x16	CPU2	Low profile
	2 SFF + 2 Full-Height, Half-Length (FHHL) riser kit [9]					
	3	PCIe 3.0	x16	x16	CPU1	FHHL

Feature	Description					
	4	PCIe 3.0	x8	x8	CPU1	FHHL
Storage controllers	**Software RAID** [10]	HPE Smart Array S100i SR Gen10 SW RAID				
	Essential RAID controllers	• HPE Smart Array E208i-a SR G10 LH controller • HPE Smart Array E208i-p SR Gen10 controller • HPE Smart Array E208e-p SR Gen10 controller				
	Performance RAID controllers [11]	• HPE Smart Array P408i-a SR G10 LH controller • HPE Smart Array P408i-p SR Gen10 controller • HPE Smart Array P408e-p SR Gen10 controller • HPE Smart Array P816i-a SR G10 LH controller • HPE Smart Array P824i-p MR Gen10 controller				
	NVMe OS boot device	• HPE NS204i-p x2 lanes NVMe PCIe3 x8 OS boot device				
Internal storage devices	• Hard drives • None ship standard					
Maximum storage [12]	**Storage**	**Capacity**	**Configuration**			
	Hot-Plug SFF SAS HDD	129.6TB	48 + 6 x 2.4TB (With rear drive cage option)			
	Hot-Plug SFF SATA HDD	108TB	48 + 6 x 2.0TB (With rear drive cage option)			
	Hot-Plug SFF SAS SSD	829.44TB	48 + 6 x 15.36TB (With rear drive cage option)			
	Hot-Plug SFF SATA SSD	414.72TB	48 + 6 x 7.68TB (With rear drive cage option)			
	Hot-Plug LFF SAS HDD	448TB	24 + 4 x 16TB (With rear drive cage option)			

Feature	Description		
	Hot-Plug LFF SATA HDD	448TB	24 + 4 x 16TB (With rear drive cage option)
	Hot-Plug LFF SAS SSD	107.52TB	24 + 4 x 3.84GB (With rear drive cage option)
	Hot-Plug LFF SATA SSD	215.04TB	24 + 4 x 7.68TB (With rear drive cage option)
	Hot-Plug SFF NVMe PCIe SSD (Rear drive cage only)	92.16TB	6 x 15.36TB NVMe
Power supply [13]	• HPE 800 W flex slot platinum Hot-Plug low halogen power supply kit. • HPE 1600 W flex slot platinum Hot-Plug low halogen power supply kit.		
Interfaces	**Video**	1 rear - Video Graphics Array (VGA) port	
	Network ports	2 x 1 GbE Embedded NIC	
	iLO remote management port	2 x 1Gb Dedicated	
	MicroSD slot [14]	1 MicroSD slot	
	USB 2.0	1 Front (Standard on all chassis types)	
	USB 3.0	Up to 3 total: 2 rear, 1 internal	
Industry standard compliance [15]	• Advanced Configuration and Power Interface (ACPI) 6.1 compliant • PCIe 3.0 compliant • Wake-on-LAN (WOL) support • Microsoft logo certifications • Preboot eXecution Environment (PXE) support • USB 3.0 compliant • USB 2.0 compliant • System Management BIOS (SMBIOS) 3.1 • Unified Extensible Firmware Interface (UEFI) 2.6		

Feature	Description
	• Redfish API • Intelligent Platform Management Interface (IPMI) 2.0 • Secure digital 4.0 • Trusted Platform Module (TPM) 2.0 support • Advanced Encryption Standard (AES) • Triple Data Encryption Standard (3DES) • Simple Network Management Protocol (SNMP) v3 • Transport Layer Security (TLS) 1.2 • DMTF Systems Management Architecture for Server Hardware Comma nd Line (SMASH CLP) • Active directory v1.0 • American Society of Heating, Refrigerating and Air-Conditioning Engin eers (ASHRAE) A3/A4 • Energy star
Graphics	• Integrated video standard ◦ Video modes up to 1920 x 1200 - 60 Hz (32 bp) ◦ 16MB video memory • HPE iLO 5 on system management memory ◦ 32MB flash ◦ 4Gb DDR3 with ECC protection
HPE Serve r UEFI/leg acy ROM [16]	UEFI enables numerous new capabilities specific to HPE ProLiant servers s uch as: • Secure boot and secure start enable for enhanced security. • OS specific functionality. • Support for > 2.2TB (Using GUID Partition Table (GPT)) boot drives. • USB 3.0 stack • Embedded UEFI shell

Feature	Description
	• Mass configuration deployment tool using iLO RESTful API that is Redfis h API conformant. • PXE boot support for IPv6 networks • Workload profiles for simple performance optimization. • UEFI boot mode only • TPM 2.0 support • NVMe boot support • Platform Trust Technology (PTT) can be enabled. • iSCSI software initiator support • HTTP/HTTPs boot support as a PXE alternative. • Boot support for option cards that only support a UEFI option ROM.
Embedded managem ent	• HPE iLO • UEFI • Intelligent provisioning • iLO RESTful API
Security	• UEFI secure boot and secure start support • Immutable silicon root of trust • FIPS 140-2 validation • Common criteria certification • Configurable for PCI DSS compliance • AES and 3DES on browser. • Support for Commercial National Security Algorithms (CNSA). • iLO security modes including a new iLO advanced premium security lic ense. • Granular control over iLO interfaces • Smart card (PIV/CAC) and kerberos based 2-factor authentication. • Tamper-Free updates - Components digitally signed and verified.

Feature	Description
	• Secure recovery - Recover critical firmware to known good state on det ection of compromised FW. • Ability to rollback firmware • Secure erase of NAND • TPM 2.0 option • Bezel locking kit

NOTE

1. Optional rear drive cages: 6 NVMe SSD (SFF), 4 LFF (Only for 24 LFF) or 2 SFF + 2 FHHL riser kit.
2. Check the below link for more information regarding Intel Xeon process ors.

   Click here to access the page for Intel Xeon Processors.

3.
   - Platinum processors: 2 and 4 socket capable, 2S - 2UPI, 4S - 3UPI, 8 S - 3UPI - 10.4 GT/s.
   - 6-channel DDR4 - 2666 MT/s. 768GB max memory capacity (1.5TB o n select skus).
   - Intel turbo boost technology, Intel Hyper-Threading technology Intel AVX-512 (2 x 512-bit FMA). 48 lanes PCIe 3.0, advanced RAS.
4.
   - Gold processors: 2 and 4 socket capable, 2S - 2UPI, 4S - 3UPI - 10.4 GT/s. 6-channel DDR4 - 2400 MT/s (SKU 5122 - Supports 2666 MT/s).
   - 768GB max memory capacity (1.5TB on select skus).
   - Intel turbo boost technology, Intel Hyper-Threading technology, Inte l AVX-512 (1 x 512-bit FMA) (SKU 5122 - Supports 2 x 512-bit FMA). 48 lanes PCIe 3.0, advanced RAS.
5.
   - Silver processors: 2 socket capable, 2S - 2UPI - 9.6 GT/s. 6-channel D DR4 - 2400 MT/s, 768GB max memory capacity.
   - Intel turbo boost technology, Intel Hyper-Threading technology, Inte l AVX-512 (1 x 512-bit FMA).
   - 48 lanes PCIe 3.0, standard RAS.
6. Check the below link for more information regarding Intel chipsets:

   Click here to access the page for Intel Server Chipsets.

Feature	Description

7. Check the below link for more information on iLO:

   Click here to access the QuickSpecs page for HPE iLO.

8.

   - Maximum memory per socket is dependent on processor selection. Processors supporting 1.5TB per CPU is indicated by the **M** in the p rocessor model names (i.e. 8160M).
   - Mixing of RDIMM and LRDIMM memory is not supported.
   - For general Server memory population rules and guidelines for Gen 10 see details here:

     Click here to access the page for Server memory population rules for HPE Gen10 servers with Intel Xeon Scalable processors.

9. If 2 SFF + 2 FHHL riser kit is installed, the PCIe slot 2 will be unavailable due to occupation of the riser.
10.

    - HPE Smart Array S100i SR Gen10 SW RAID will operate in UEFI mod e only. For legacy support an additional controller will be needed an d for Configure-To-Order (CTO) orders select the legacy mode settin gs part, 758959-B22.
    - HPE Smart Array S100i SR Gen10 SW RAID is off by default and must be enabled.
    - The S100i supports windows only
    - For Linux users, HPE offers a solution that uses In-Distro Open-Sou rce software to create a Two-Disk RAID 1 boot volume. Check the bel ow link for more information on this:

      Click here to access the page for Implementing Linux Software R AID1 on HPE ProLiant Servers.

11.

    - SFF NVMe PCIe SSD is only supported in the optional rear dirve cag e.
    - Only 1 optional rear dirve cage can be installed per server.
12.

    - Available in 94% efficiency
    - 1600 W power supplies only support high line voltage (200 V ac to 240 V ac).
13. The MicroSD slot is not Hot-Pluggable, power down server before rem oval.

Feature	Description
14.	• The UEFI system utilities tool is analogous to the HPE ROM-Based S etup Utility (RBSU) of legacy BIOS. Check the below link for more in formation on UEFI: **Click here to access the webpage for Unified Extensible Firmware Interface (UEFI)**. • For UEFI boot mode, boot environment and OS image installations s hould be configured properly to support UEFI. • UEFI FIO setting (758959-B22) can be selected to configure the syst em in legacy mode in the factory for the HPE ProLiant Gen10 Server.

Specifications

Subtopics

Physical specifications
Environmental specifications
Electrical specifications
Safety certifications

Physical specifications

Specifications	Description
Dimensions (H x W x D)	8.75 x 44.80 x 82.55 cm (3.44 x 17.63 x 3 2.50 in)
Weight (Approximate)	• **Minimum:** 22.34 kg (49.25 lb) • **Maximum:** 40.60 kg (89.51 lb)

Environmental specifications

Specifications	Description
Standard operating support	• 10° to 35° C (50° to 95° F) at sea level with an altitude derating of 1.0°C per every 305 m (1.8° F per every 1000 ft) above sea level to a maximum of 3 050 m (10,000 ft), no direct sustained sunlight. Maximum rate of change is 20° C/hr (36° F/hr). The upper limit and rate of change may be limited by the type and number of options installed • System performance during standard operating support may be reduced if operating with a fan fault or above 30° C (86° F) • For approved hardware configurations, the supported system inlet range is extended to be: 5° to 10° C (41° to 50° F) and 35° to 40° C (95° to 104° F) at sea level with an altitude derating of 1.0° C per every 175 m (1.8° F per every 574 ft) above 900 m (2953 ft) to a maximum of 3050 m (10,000 ft)
Extended ambient operating support	• For approved hardware configurations, the supported system inlet range is extended to be: 40° to 45° C (104° to 113° F) at sea level with an altitude derating of 1.0° C per every 125 m (1.8° F per every 410 ft) above 900 m (2953 ft) to a maximum of 3050 m (10,000 ft) • System performance may be reduced if operating in the extended ambient operating range or with a fan fault
Relative humidity (Rh) (Non-Condensing)	• **Operating:** 8% to 90% - Rh, 28° C (82.4° F) maximum wet bulb temperature, Non-Condensing • **Non-Operating:** 5% to 95% Rh, 38.7° C (101.7° F) maximum wet bulb temperature, Non-Condensing
Altitude	• **Operating:** 3050 m (10,000 ft). This value may be limited by the type and number of options installed. Maximum allowable altitude change rate is 457 m/min (1500 ft/min) • **Non-Operating:** 9144 m (30,000 ft). Maximum allowable altitude change rate is 457 m/min (1500 ft/min)
Acoustic noise	Listed are the declared A-Weighted sound power levels (LWAd) and declared average bystander position A-Weighted sound pressure levels (LpAm) when the product is operating in a 23°C ambient environment. Noise emissions were

Specifications	Description

measured in accordance with ISO 7779 (ECMA 74) and declared in accordance with ISO 9296 (ECMA 109). The listed sound levels apply to standard shipping configurations. Additional options may result in increased sound levels. Please have users HPE representative provide information from the HPE EMESC website for further technical details regarding the configurations listed below.

Configuration SKU	Entry	Base	Performance
Idle			
LWAd	5.1 B	5.1 B	5.2 B
LpAm	35 dBA	35 dBA	36 dBA
Operating			
LWAd	5.3 B	5.2 B	5.9 B
LpAm	36 dBA	38 dBA	45 dBA

NOTE

Acoustics levels presented here are generated by the test configuration only. Acoustics levels will vary depending on system configuration. Values are subject to change without notification and are for reference only.

Electrical specifications

Specifications	Description
Rated line voltage	• 100 to 120 V ac • 200 to 240 V ac
BTU rating (Maximum)	**For 800 W power supply:** 3207 BTU/hr (At 100 V ac), 3071 BTU/hr (At 200 V ac), 3112 BTU/hr (At 240 V ac) for China only

Specifications	Description
Power supply output (Per power supply)	
Rated Steady-State p ower	• **For 1600 W power supply:** 1600 W (At 240 V ac), 1600 W (At 240 V dc) for China only • **For 800 W power supply:** 800 W (At 100 V ac), 800 W (At 240 V ac), 800 W (At 240 V dc) input for China only
Maximum peak power	**For 1600 W power supply:** 1600 W (At 200 to 240 1 V ac), 1 600 W (At 240 V dc) input for China only

Safety certifications

Specifications	Description
Emissions Classification (E MC)	To view the regulatory information for the product, view t he safety and compliance information for server, storage, power, networking and rack products, available at the HP ESC: **Click here to access the HPESC page for Enterprise Sa fety and Compliance**.

Spare Parts

Subtopics

New model specific parts lists
Mechanical components
System components
System options

New model specific parts lists

IMPORTANT: To obtain current part number information for a specific product model, use the Standard Models page for this product family.

- The product Standard Models page now links the model SKU numbers to the spare parts list for each model found on the **HPE PartSurfer web site**. (To report missing or incorrect parts information in PartSurfer, please use the "Contact us" and "Missing or incorrect data" links within the PartSurfer web site utility.)
- To look up RoHS-Compliant information in PartSurfer, use the component's option part number or the sales order number for a system in which the component is used (Available in the QuickSpecs or Standard Models page).

Mechanical components

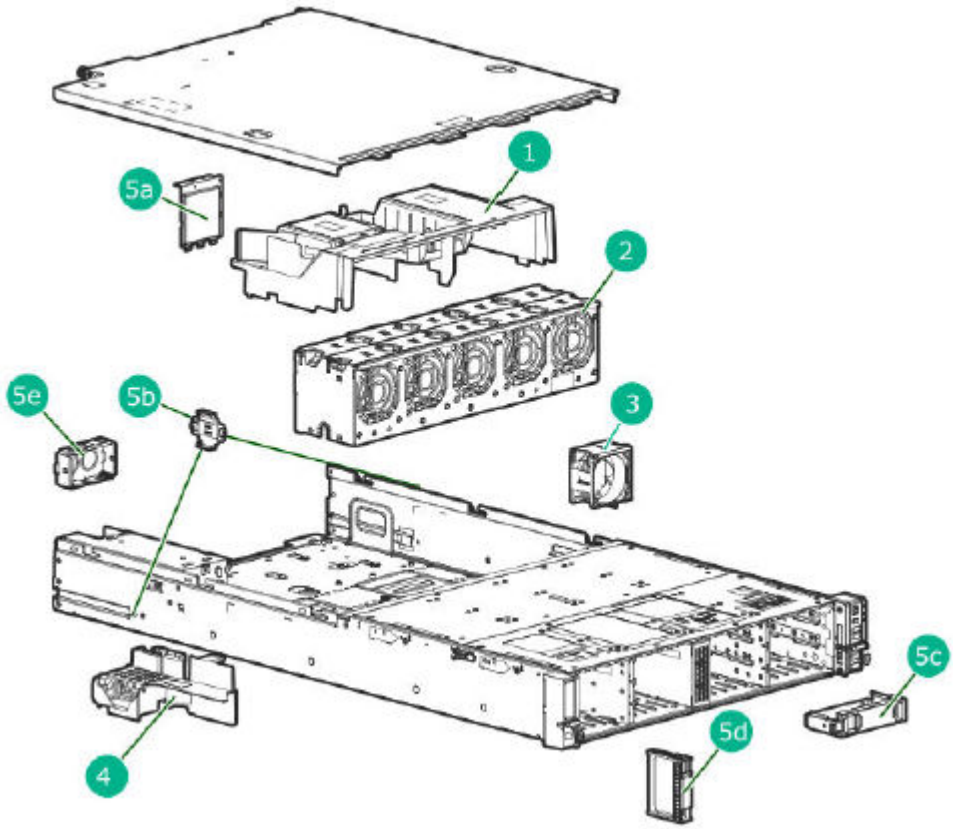

Item	Description
1	Air baffle
2	Fan cage
3	Fan
4	Cable management holder
5	Miscellaneous mechanical
5a	Air blocker for the onboard PCIe expansion slots 5-7
5b	Chassis retention bracket
5c	Small Form Factor (SFF) drive blank
5d	Large Form Factor (LFF) drive blank
5e	Power supply blank
6	Rear Non-Volatile Memory express (NVMe) drive cage air baffle [1]
7	Rear PCI cover [1]
8	Power cable assembly [1]

NOTE

1. Not shown in the image

Air baffle

Description	Spare Part Number
Air baffle Apollo 4200 Gen10	P10254-001

Fan cage

Description	Spare Part Number
Fan cage Apollo 4200 Gen10	P10066-001

Fan

Description	Spare Part Number
Apollo 4200 fan module assembly - Fan assembly is in a module with release latch and connector	809953-001
Fan NVMe Apollo 4200 Gen10	P10081-001

Cable management holder

Description	Spare Part Number
Plastic cable guard Apollo 4200 Gen10	P10255-001

Miscellaneous mechanical

Description	Spare Part Number
Miscellaneous blank kit for Apollo 4200 - Includes air blocker for PCIe expansion slots 5-7, air blocker for front 2-drive cage backplane, chassis retention bracket, fan blank, LFF and SFF drive blank, cable management holder and FlexibleLOM blank	809955-001
SFF drive blank	734348-001
Blank cover kit - Contains one power supply blank cover, two 8-bay SFF hard drive cage blank covers, one secondary PCI blank cover, two fan slot blanks and one smart array controller blank	777301-001

Rear NVMe drive cage air baffle

Description	Spare Part Number
Baffle, NVMe, 6SFF, Apollo 4200	P12368-001

Rear PCI cover

Description	Spare Part Number
Cover rear PCI Apollo 4200, Gen10	P10256-001

Power cable assembly

Description	Spare Part Number
Cable 1st LFF track signal power A4200 Gen10	P10061-001
Cable 2nd LFF track signal power A4200 Gen10	P10062-001
Cable 1st SFF track signal power A4200 Gen10	P10068-001
Cable - 2nd SFF track single power A4200 Gen10	P10069-001

System components

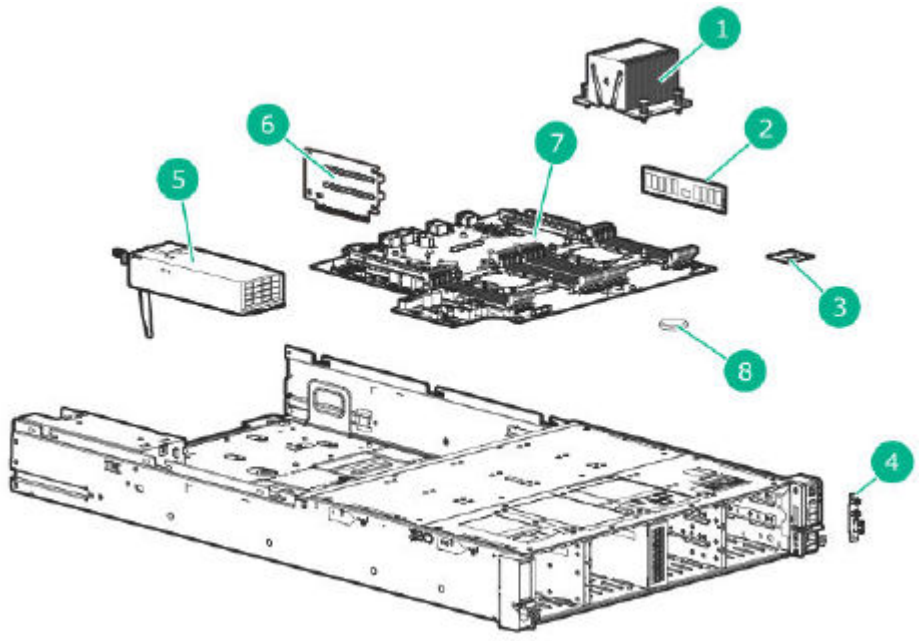

Item	Description
1	Heatsink
2	• Dual In-line Memory Module (DIMM) • HPE Persistent Memory module spare parts
3	Processor
4	Front panel board
5	Power supply
6	PCIe riser board
7	System board
8	System battery

Heatsink

Description	Spare Part Number
Heatsink GPN CPU Apollo 4200 Gen10	P09884-001

DIMM

Description	Spare Part Number
32GB PC4-2666V-R, registered Synchronous Dynamic Random Access Memory (SDRAM) 2G x 4, operated in a Dual Data Rate (DDR4) mode, packaged in a DIMM organized as 4G x 72	850881-001
64GB PC4-2666V-L, registered SDRAM 2G x 4, operated in a DDR4 mode, packaged in a DIMM organized as 8G x 72	850882-001
16Gb PC4-2666V-R SDRAM 1G x 8, operated in DDR4 mode, DIMM, 2G x 72	868846-001

2933 MT/s DIMMs

Description	Spare Part Number
HPE 8GB (1 x 8GB) single rank x8 DDR4-2933 CAS-21-21-21 registered smart memory kit	P06186-001
16GB, single rank x4, DDR4-2933, CAS-21-21-21, registered smart memory kit	P06187-001
HPE 16GB (1 x 16GB) dual rank x8 DDR4-2933 CAS-21-21-21 registered smart memory kit	P06188-001
DIMM 32GB PC4-2933Y-R 2Gx4 kit	P06189-001
HPE 64GB (1 x 64GB) dual rank x4 DDR4-2933 CAS-21-21-21 registered smart memory kit	P06192-001
64GB, quad rank x4, DDR4-2933, CAS-21-21-21, load reduc ed smart memory kit	P06190-001
HPE 128GB (1 x 128GB) octal rank x4 DDR4-2933 CAS--24-2 1-21 LRDIMM smart memory kit	P06191-001
DIMM 128GB PC4-2933Y-L 4Rx4 kit	P16001-001

HPE Persistent memory module spare parts

Description	Spare Part Number
HPE Persistent memory module, 128GB	844071-001
HPE Persistent memory module, 256GB	844072-001
HPE Persistent memory module, 512GB	844073-001

Processor

Description	Spare Part Number
41XX processor	
Intel Xeon-Silver 4110 Eight-Core 64-bit processor - 2.10 GHz (Skylake), 11MB level-3 cache, 85 W Thermal Design Power (TD P), socket FCLGA3647	875711-001
Intel Xeon-Silver 4114 Ten-Core 64-bit processor - 2.20 GHz (S kylake), 13.75MB level-3 cache, 85 W TDP, socket FCLGA3647	875713-001

Description	Spare Part Number
Intel Xeon-Silver 4116 Twelve-Core 64-bit processor - 2.10 GHz (Skylake), 16.5MB level-3 cache, 85 W TDP, socket FCLGA3647	875716-001
51XX processor	
Intel Xeon-Gold 5118 Twelve-Core 64-bit processor - 2.30 GHz (Skylake) 16.5MB level-3 cache, 105 W TDP, socket FCLGA3647	875717-001
61XX processor	
Intel Xeon-Gold 6130 Sixteen-Cores, processor - 2.10 GHz,(Skylake), 22MB level-3 cache, 125 W TDP, socket FCLGA3647	874736-001
Intel Xeon-Gold 6132 Fourteen-Cores, processor - 2.60 GHz (Skylake). 19.25MB level-3 cache, 140 W TDP, socket FCLGA3647	875722-001
Intel Xeon-Gold 6134 Eight-Core 64-bit processor - 3.20 GHz (Skylake) 24.75MB level-3 cache, 130 W TDP, socket FCLGA3647	875723-001
Intel Xeon-Gold 6140 Eighteen-Core 64-bit processor - 2.30 GHz (Skylake), 24.75MB level-3 cache, 140 W TDP, socket FCLGA3647	874734-001
Intel Xeon-Gold 6148 Twenty-Cores, processor - 2.40 GHz (Skylake), 27.5MB level-3 cache, 150 W TDP, socket FCLGA3647	874732-001
81XX processor	
Intel Xeon-Platinum 8160 Twenty-Four-Core 64-bit processor - 2.10 GHz (Skylake), 33MB level-3 cache, 150 W TDP, socket FCLGA3647	874729-001
Second Generation Intel Xeon Scalable Processors - 42XX processors	
Intel Xeon Silver 4208 v4 Eight-Core 64-bit processor - 2.10 GHz (Cascade Lake, 11MB cache, 85 W TDP, socket FCLGA3647)	P11605-001
CPU CLX 4208R - 2.2 GHz 100 W 8C	P19247-001
Intel Xeon Silver 4210 v4 Ten-Core 64-bit processor - 2.20 GHz (Cascade Lake, 13.75MB cache, 85 W TDP, socket FCLGA3647)	P11606-001
Intel Xeon-Silver 4210R v4 Ten-Core 64-bit processor - 2.4 GHz (100 W TDP)	P19246-001

Description	Spare Part Number
Intel Xeon Silver 4214 v4 Twelve-Core 64-bit processor - 2.20 GHz (Cascade Lake, 16.5MB cache, 85 W TDP, socket FCLGA3 647)	P11607-001
Intel Xeon-Silver 4214R v4 Twelve-Core 64-bit processor - 2.2 GHz (100 W TDP)	P19245-001
Intel Xeon Silver 4215 v4 Eight-Core 64-bit processor - 2.50 G Hz (Cascade Lake, 11MB cache, 85 W TDP)	P11608-001
Intel Xeon Silver 4215R v4 Eight-Core 64-bit processor - 3.2 G Hz (130 W TDP)	P25089-001
Intel Xeon Silver 4216 Sixteen-Core 64-bit processor - 2.10 GH z (Cascade Lake, 22MB cache, 100 W TDP, socket FCLGA3647)	P11609-001
CPU CLX 4216R - 2.2 GHz 125 W 16C	P19244-001
52XX processors	
Intel Xeon Gold 5215 v4 Ten-Core 64-bit processor - 2.60 GHz (Cascade Lake, 20MB cache, 85 W TDP, socket LGA-3647)	P11610-001
CPU CLX 5215R- 2.7 GHz 100 W 10C	P19243-001
Intel Xeon Gold 5218 v4 Sixteen-Core 64-bit processor - 2.30 GHz (Cascade Lake, 22MB cache, 125 W TDP, socket FCLGA3 647)	P11612-001
Intel Xeon-Gold 5218R v4 Sixteen-Core 64-bit processor - 2.3 GHz (125 W TDP)	P25090-001
Intel Xeon Gold 5220 v4 Eighteen-Core 64-bit processor - 2. 20 GHz (Cascade Lake, 24.75MB cache, 125 W TDP, socket FC LGA2011-3)	P11613-001
Intel Xeon-Gold 5220R v4 Eighteen-Core 64-bit processor - 2. 2 GHz (125 watt thermal design power (TDP))	P19241-001
62XX processors	
2.7 GHz Intel Xeon-G 6226 processor	P12180-001
Intel Xeon-Gold 6226R v4 Sixteen-Core 64-bit processor - 2.9 GHz (150 W TDP)	P25094-001

Description	Spare Part Number
Intel Xeon Gold CLX 6230 Twenty-Core 64-bit processor - 2.10 GHz (Cascade Lake , 27.5MB cache, Intel QuickPath interconnect (QPI) speed 8.0 GT/s, 125 W TDP, socket FCLGA3647)	P11614-001
Intel Xeon-Gold 6230R v4 Twenty Six-Core 64-bit processor - 2.1 GHz (150 W TDP)	P25095-001
Intel Xeon-Gold 6238R v4 Twenty Eight-Core 64-bit processor - 2.2 GHz (165 W TDP)	P25096-001
Intel Xeon-Gold 6240R v4 Twenty Four-Core 64-bit processor - 2.4 GHz (165 W TDP)	P25097-001
Intel Xeon Gold 6242 v4 Sixteen-Core 64-bit processor - 2.80 GHz (Cascade Lake, 22MB cache, 150 W TDP, socket LGA-3647)	P11616-001
Intel Xeon Gold 6248 v4 Twenty-Core 64-bit processor - 2.50 GHz (Cascade Lake, 27.5MB cache, 150 W TDP, socket FCLGA3647)	P11618-001
Intel Xeon Gold 6252 v4 Twenty Four-Core 64-bit processor - 2.10 GHz (Cascade Lake, 22MB cache, 150 W TDP, socket LGA-3647)	P11619-001
82XX processors	
Intel Xeon Platinum 8260 v4 Twenty Four-Core 64-bit processor - 2.40 GHz (Cascade Lake, 35.75MB cache, 165 W TDP, socket FCLGA3647)	P11621-001
Intel Xeon CLX 8276 Twenty Eight-Core 64-bit processor - 2.20 GHz (Cascade Lake, 38.5MB cache, 165 W TDP, socket FCLGA3647)	P11624-001

Front panel board

Description	Spare Part Number
Front panel board A4200 G10	P10063-001

Power supply

Description	Spare Part Number
800 W ac flexible slot **Platinum Plus** hot-plug low halogen power supply - Supports power discovery services (Blue plug) - 96% efficiency- Mixing of power supplies in the same server is not supported, must be the same spare part number	866730-001
1600 W flexible slot **Platinum Plus** hot-plug low halogen power supply - Supports power discovery services (Blue plug) - 96% efficiency - Mixing of power supplies in the same server is not supported, must be the same spare part number	863373-001
HPE 800 W Flex slot -48 V dc hot-plug low halogen power supply kit - 94% efficiency, Mixing of power supplies in the same server is not supported, must be the same spare part number	866728-001
800 W flex slot universal hot-plug low halogen power supply kit - 277 V ac/380 V dc power input - 94% efficiency- Mixing of power supplies in the same server is not supported, must be the same spare part number	866727-001
800 W flexible slot Titanium hot-plug low halogen power supply - 200 - 240 V ac power input - 96% efficiency- Mixing of power supplies in the same server is not supported, must be the same spare part number	866793-001

PCIe Riser board

Description	Spare Part Number
CPU1 Full-Height, Half-Length (FHHL) x 16 x 8 riser A4200 G10	P10075-001
NVMe Pass-Through riser A4200 G10	P10082-001

System board

Description	Spare Part Number
MLB/system board A4200 G10[1]	P10065-001
Main Login Board (MLB)/System board A4200 G10	P10065-002

Description	Spare Part Number
Printed Circuit Assembly(PCA) Multi-Layer board/system board A4200 G10 American Electric Power(AEP)[2]	P10065-003

NOTE

1. Hewlett Packard Enterprise does not support replacing a -002 or -003 sy stem board with a -001 system board.

2. The -003 system board can replace a -001 or -002 system board.

System battery

Description	Spare Part Number
Battery for Real-Time Clock (RTC) - 3.0 V, 2 20 mAh, lithium coin cell, 20 mm diameter, 3.2 mm height (CR2032)	319603-001

System options

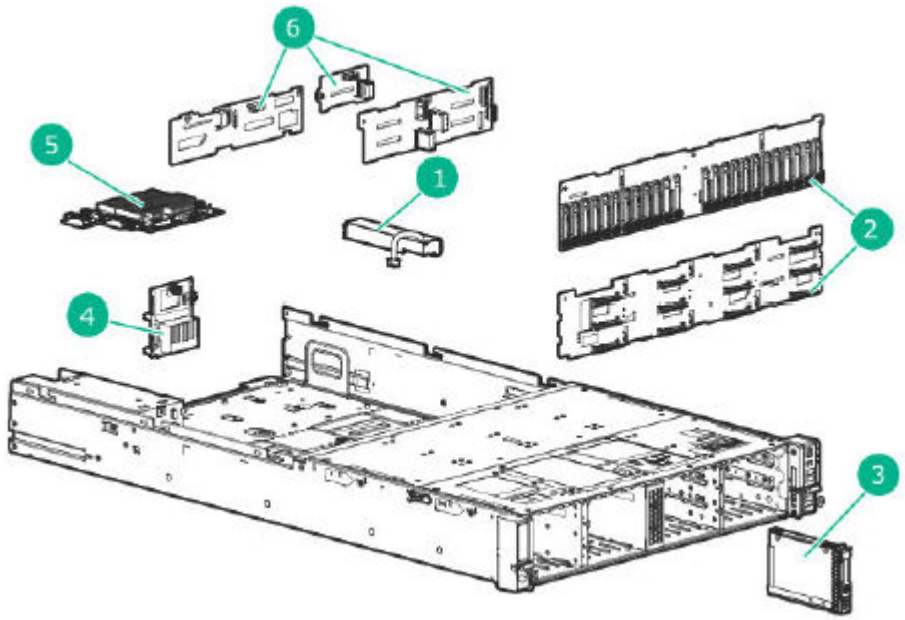

Item	Description
1	HPE Smart Storage Battery
2	Front/internal drive cage backplane
3	Drive blank
4	Power supply backplane board
5	Expansion board option
6	Rear drive cage backplane
7	Drive [1]
8	External drive
9	MicroSD
10	HPE Trusted Platform Module (TPM) 2.0 [1]
11	Cable [1]

NOTE

1. Not shown in the image

HPE Smart storage battery

Description	Spare Part Number
96 W smart storage battery - One battery pack provides Flash Back Write Cache (F BWC) for all the drive controllers in the se rver - Connects to the system I/O board, 14 5 mm (5.7 in) long cable	878643-001

Front/internal drive cage backplane

Description	Spare Part Number
Backplane board assembly - For the front 24-bay SFF drive cage	809948-001
Backplane board assembly for Apollo 4200 - For the front 12-bay LFF drive cage	809947-001

NOTE

These part numbers apply to both the front and internal drive cage backplanes.

Drive blank

Description	Spare Part Number
Hard drive blank (Cover) - To fill empty LFF drive bays	675039-001
Hard drive blank (Cover) - To fill empty SFF drive bays - for Gen8 servers	670033-001

Power supply backplane board

Description	Spare Part Number
Power supply board A4200 G10	P10064-001

Expansion board option

Description	Spare Part Number
Smart Array Serial Attached SCSI (SAS) controllers	
Smart Array E208i-a controller - Adaptive RAID on Chip (AROC), 8-SAS lanes across 2 x4 internal Mini-SAS ports, No FBWC, 12 Gb/s SAS, 6 Gb/s SATA, RAID 0, 1, 5, 10	836259-001
Smart Array P408i-a SR modular controller - 8-SAS lanes across 2 x 4 internal Mini-SAS ports, 2GB FBWC, 12 Gb/s SAS, 6 Gb/s SATA, RAID 0, 1, 5, 6, 10, 50, 60, 1 Advanced Data Mirroring (ADM), 10 ADM	836260-001

Description	Spare Part Number
Smart Array P816i-a SR Gen10 - AROC, SAS/SATA interface, 16-SAS lanes across 4 x 4 internal Mini-SAS ports, 4GB FBWC, 12 Gb/s SAS, 6 Gb/s SATA	836261-001
Smart Array E208i-p SR controller - SAS/SATA interface, 8-SAS lan es across 2 x 4 internal Mini-SAS ports, No FBWC, 12 Gb/s SAS, 6 G b/s SATA, PCI express 3.0 x8 link, RAID 0, 1, 5, 10	836266-001
HPE Apollo 4200 P824I-P enablement kit	P11274-B21
Smart Array P408i-p SR modular controller - 12 Gb/s SAS, 6 Gb/s SATA and PCIe 3.0 x 8, 8-SAS 2 x 4 internal Mini-SAS lanes, 2GB F BWC, RAID 0, 1, 5, 6, 10, 50, 60, 1 ADM, 10 ADM	836269-001
24 Port PCIe RAID controller with 3 pin cable	871043-001
InfiniBand (IB) adapters	
IB Fourteen Data Rate (FDR)/ethernet FlexibleLOM - 10Gb/40Gb 2-p ort 544+ Quad Small Form-factor Pluggable (QSFP) adapter	764736-001
840 QSFP28 100GB adapter - IB, Enhanced Data Rate/Ethernet (E DR/EN), 1-port	828107-001
840 QSFP28 100GB adapter - IB, EDR/EN, 2-port	828108-001
Omni-Path adapter 1x QSFP28 - Low profile PCIe Gen3 x1	841703-001
Performance and Coverage Analyse (PCA), Adapter 1P 841 QSFP 28 100Gb	878578-001
IB EDR/EN 100Gb 2-port 841QSFP28 adapter	878579-001
IB, High Dynamic Range (HDR), EN 200G, 940 QSFP, 56 Adapter	P08354-001
IB, HDR, PCIe G3 AUX with 350 mm cable	P10331-001
IB, HDR, 100/EN, 100G, 940, QSFP56 adapter	P08356-001
IB, HDR, 100/EN, 100G, 940, QSFP56 adapter	P08355-001
Network controllers	
Ethernet 1Gb 4-port 331T adapter - Has four 10/100/1000BASE-T RJ 45 ports and 4Mb integrated buffer memory - Requires one x4 (Ge n2) PCI express slot (Compatible with x8 and x16 PCI express slots) - Requires CAT5 or better twisted-pair	649871-001

Description	Spare Part Number
Ethernet 1Gb 2-port 332T adapter - Has two 10/100/1000BASE-T RJ 45 ports - Requires one x1 (Gen2) PCI express slot (Compatible wit h x1, x4, x8 and x16 PCI express slots) - Requires CAT5 or better twi sted-pair	616012-001
Ethernet 1Gb 2-port 361T adapter - Has two 10/100/1000BASE-T R J-45 ports and 256MB integrated buffer memory - Requires one x 4 PCI express slot (Compatible with x8 and x16 PCI express slots) - Requires CAT5E or better twisted-pair	656241-001
Ethernet 1Gb 4-port 366T adapter - Has four 10/100/1000BASE-T R J45 ports - Requires one x4 (Gen2) PCI express slot (Compatible w ith x4, x8 and x16 PCI express slots) - Requires CAT5 or better twist ed-pair	816551-001
Ethernet 10Gb 2-port 530 Small Form-factor Pluggable Plus (SFP+) adapter - Has two 10Gb SFP+ ports and 256MB integrated buffer memory - Requires one x8 (Gen2) PCI express slot	656244-001
Ethernet 10Gb 2-port 530T adapter - Has two 10Gb RJ45 ports and 256MB integrated buffer memory - Requires one x8 (Gen2) PCI ex press slot - Requires CAT6 Unsheilded Twisted Pair (UTP) or better Twisted-Pair	657128-001
Ethernet 10Gb 2-port 562SFP+ adapter - Has two 10 Gbe SFP+ port s and 256MB integrated memory - Provides up to 40 Gb/s Bi-Direc tional per adapter - Requires one x8 PCI (Gen 3) express slot (Back ward compatible with x4 PCI express)	790316-001
Network Interface Controller (NIC) Gen3 2p 10 GbE SFP SFN8522	P02367-001
NIC Gen3 2p 40 GbE QSFP+ SFN8042	P02368-001
Ethernet 10Gb 2-port 535FLR-T adapter - 2-10Gb ports, 40 Gb/s of Bi-Directional ethernet bandwidth, FlexibleLOM and stand up	815669-001
Ethernet 10/25Gb 2-port 631SFP28 adapter - Dual 10/25Gb ports p rovide up to 100 Gb/s of Bi-Directional, FlexibleLOM (631FLR-SFP 28) or stand up	840130-001
Ethernet 10Gb 2-port 562T adapter - Dual 10Gb ports provide up t o 40 Gb/s Bi-Directional ethernet bandwidth	840137-001
Ethernet 10/25Gb 2-port 640SFP28 adapter, PCIe card Form-Facto r - Has two dual 10/25 Gbe SFP28 ports capable of 50 Gb/s Bi-Dire ctional, 100 Gb/s aggregate Bi-Directional theoretical bandwidth - Requires one x8 PCI (Gen 8) express slot	840140-001

Description	Spare Part Number
Ethernet 10/25Gb 2-port 621SFP28 adapter - Dual 10/25 Gb ports p rovide up to 100 Gb/s of Bi-Directional ethernet bandwidth per ad apter	869570-001
Ethernet 10Gb 2-port 521T adapter	869573-001
563SFP+, 10GB, 4-port ethernet adapter	870511-001
Adapter Ethernet 10/25Gb 2-port	879666-001
NIC G3 1p 100 Gbe QSFP28 adapter	877697-001
PCIe accelerators	
375GB PCIe x4 Write Intensive (WI) Half-Height (HH) Digital Signed (DS) Spl Solid State Drive (SSD) card	882007-001
750GB PCIe x4 WI HH DS card	P03580-001
750GB PCIe x4 WI HH DS card	P05455-001
HPE NS204i-p NVMe OS boot device spare parts	
PCA B102ip smart boot solution	P14379-001
480GB SSD - NVMe x4 M.2 22110	P24886-001
Smart I/O (Pensando Distributed Services Platform) spare part	
PCA DSP DSC-25 10/25G 2p SFP28 card	P27682-001

Rear drive cage backplane

Description	Spare Part Number
2SFF Rear backplane Gen10 Apollo 4200	P10074-001
6SFF NVMe Rear backplane A4200 G10	P10080-001
Backplane board assembly for Apollo 4200 - For the rear 4-bay LF F drive cage	809949-001
Rear drive cage spare parts	
HPE Apollo 4200 Gen10 4LFF rear drive cage kit	P07943-B21

Description	Spare Part Number
HPE Apollo 4200 Gen10 2SFF rear drive cage and 2 full Height Half Length riser kit	P07248-B21
HPE Apollo 4200 Gen10 6SFF NVME rear drive cage kit	P07250-B21
6 SFF rear drive cage	P17000-001

Drive

Description	Spare Part Number
Hot-plug drive	
300GB SAS hard drive - 12 Gb/s interface, 15,000 rpm, 3.5 in LFF, Dual Port (DP), Low Profile Converter (LPC) SFF to LFF, DS firmware	870793-001
900GB SAS hard drive - 12 Gb/s interface, 15,000 rpm, 3.5 in LFF, DP, LPC SFF to LFF, DS firmware	870796-001
1TB SAS hard drive - 12 Gb/s interface, 7,200 rpm, 3.5 in LFF, low profile	846613-001
1TB SATA Hard Disk Drive (HDD) - 6 Gb/s interface, 7,200 rpm, 3.5 in LFF, low profile	862130-001
2TB SAS hard drive - 12 Gb/s interface, 7,200 rpm, 3.5 in LFF, Midline (MDL), low profile	834133-001
2TB SATA hard drive - 6 Gb/s interface, 7,200 rpm, 3.5 in LFF, low profile	862132-001
4TB SAS hard drive - 12 Gb/s transfer rate interface, 7,200 rpm, 3.5 in LFF, low profile, MDL, 512e format, DS	862137-001
4TB SATA hard drive - 7,200 rpm, 3.5 in LFF, 6 Gb/s transfer rate interface, low profile, MDL, 512e format, DS	862135-001
4TB SATA hard drive - 6 Gb/s interface, 7,200 rpm, 3.5 in LFF, low profile	862133-001
6TB SAS hard drive - 12 Gb/s transfer rate interface, 7,200 rpm, 3.5 in LFF, low profile, MDL, 512e format, DS	862136-001
6TB SATA hard drive - 7,200 rpm, 3.5 in LFF, 6 Gb/s transfer rate interface, low profile, MDL, 512e format, DS	862134-001

Description	Spare Part Number
8TB SAS hard drive - 12 Gb/s interface, 7,200 rpm, 3.5 in LFF, low profile carrier, 512e format, DS firmware	834132-001
8TB SATA hard drive - 6 Gb/s interface, 7,200 rpm, 3.5 in LFF, low profile, 512e format, reduced depth carrier	834131-001
10TB SAS hard drive - 6 Gb/s interface, 7,200 rpm, 3.5 in LFF, low profile, Smart Carrier (SC)	857966-001
10TB SATA hard drive - 6 Gb/s interface, 7,200 rpm, 3.5 in LFF, low profile	857968-001
Drive HDD 12TB 7.2K LFF SAS low profile HE DS	882398-001
12TB SATA hot-plug HDD - 7,200 rpm, 3.5 in LFF, 6 Gb/s interface, low profile, Helium (HE), DS firmware	882401-001
300GB SAS hard drive - 12 Gb/s interface, 10,000 rpm, 2.5 in SFF, SC, DS firmware	872735-001
300GB SAS hard drive - 12 Gb/s interface, 15,000 rpm, 2.5 in SFF, enterprise drive, SC, DS firmware	870792-001
600GB SAS hard drive - 12 Gb/s interface, 10,000 rpm, 2.5 in SFF, SC, DS firmware	872736-001
600GB SAS hard drive - 12 Gb/s interface, 15,000 rpm, 2.5 in SFF, enterprise drive, SC, DS firmware	870794-001
900GB SAS hard drive - 12 Gb/s interface, 15,000 rpm, 2.5 in SFF, DP, SC, DS firmware, 512e format	870798-001
900GB SAS hard drive - 12 Gb/s interface, 15,000 rpm, 2.5 in SFF, enterprise drive, SC, DS firmware	870795-001
1TB hot-plug SAS HDD - 7,200 rpm, 12 Gb/s transfer rate, 2.5 in SFF, MDL, 512e sector format, SC	765872-001
1TB SAS drive - 12 Gb/s transfer rate, 7,500 rpm, 2.5 in SFF, MDL, SC - For use with Gen8/Gen9 or newer	832984-001
1TB hot-plug SATA HDD - 7,200 rpm, 6 Gb/s transfer rate, 2.5 in SFF, MDL, SC - Not for use in MSA products	656108-001
1.2TB SAS hard drive - 12 Gb/s interface, 10,000 rpm, 2.5 in SFF, SC, DS	872737-001

Description	Spare Part Number
1.8TB SAS hard drive - 12 Gb/s interface, 10,000 rpm, 2.5 in SFF, enterprise drive, 512e format, DS	872738-001
2TB hot-plug SAS HDD - 12 Gb/s transfer rate, 7,200 rpm, 2.5 in SFF, MDL, 512e format, SC - For use with Gen8/Gen9 or newer	765873-001
2TB hot-plug SATA HDD - 6 Gb/s transfer rate, 7,200 rpm, 2.5 in SFF, MDL, 512e sector format, SC	765869-001
2.4TB SAS hot-plug hard drive - 10,000 rpm, 2.5 in SFF, 12 Gb/s interface, SC, 512e format, SC, DS	881507-001
SSD SATA	
240GB SATA SSD - 2.5 in SFF, Read intensive (RI), SC, DS	P05319-001
240GB SATA SSD - 2.5 in SFF SC, RI	P18481-001
Drive SSD 480GB SFF SATA Mixed Use (MU) SC DS	P08620-001
Drive SSD 480GB SFF SATA RI SC DS	P05312-001
HPE 480GB SATA 6G RI SFF (2.5 in) SC 3-year warranty DS SSD	P04474-B21
480GB SATA SSD - 2.5 in SFF, RI, SC, DS	P05320-001
480GB SATA SSD - 2.5 in SFF, RI, DS, SC	P06571-001
480GB SATA SSD - 2.5 in SFF SC, MU	P18477-001
480GB SATA SSD - 2.5 in SFF SC, RI	P18482-001
960GB SATA SSD - 2.5 in SFF, MU, SC, DS	P08692-001
Drive SSD 960GB SFF SATA RI SC DS	P05313-001
HPE 960GB SATA 6G RI SFF (2.5 in) SC 3-year warranty DS SSD	P04476-B21
960GB SATA SSD - 2.5 in SFF, RI, SC, DS	P05321-001
960GB SATA SSD - 2.5 in SFF, RI, DS, SC	P06572-001
1.92TB SATA SSD - 3.5 in LFF, MU, LPC, DS	P08696-001
1.92TB SATA SSD - 2.5 in SFF, MU, SC, DS	P08694-001

Description	Spare Part Number
960GB SATA SSD - 2.5 in SFF SC, MU	P18478-001
960GB SATA SSD - 2.5 in SFF SC, RI	P18483-001
Drive SSD 1.92TB SFF SATA RI SC DS	P05314-001
HPE 1.92TB SATA 6G RI SFF (2.5 in) SC 3-year warranty DS SSD	P04478-B21
1.92TB SATA SSD - 2.5 in SFF, RI, SC, DS	P05322-001
1.92TB SATA SSD - 2.5 in SFF, RI, DS, SC	P06573-001
1.92TB SATA MU SFF SC MV SSD	P18479-001
1.92TB SATA SSD - 2.5 in SFF SC, RI	P18484-001
3.84TB SATA SSD - SC, MU, DS drive, 2.5 in SFF	P02562-001
Drive SSD 3.84TB SFF SATA RI SC DS	P05315-001
HPE 3.84TB SATA 6G RI SFF (2.5 in) SC 3-year warranty DS SSD	P04480-B21
3.84TB SATA SSD - 2.5 in SFF SC, RI	P18485-001
3.84TB SATA SSD - 2.5 in SFF, RI, SC, DS	P05323-001
3.84TB SATA SSD - 2.5 in SFF, RI, DS, SC	P06574-001
3.84TB SATA MU SFF SC MV SSD	P18480-001
Drive SSD 7.68TB SFF SATA RI SC DS	P05316-001
7.68TB SATA SSD - 2.5 in SFF SC, RI	P18486-001
SSD SATA M.2 spare parts	
240GB SSD - SATA interface, M.2 type 2280 form factor, MU, DS firmware	875850-001
Drive SSD 480GB SATA M.2 2280 MU DS	875851-001
960GB SSD - SATA interface, M.2 type 2280 form factor, MU, DS firmware	875852-001
480GB SSD - SATA interface, M.2 type 2280 form factor, RI, DS firmware	875855-001

Description	Spare Part Number
960GB SSD - SATA interface, M.2 type 2280 form factor, RI, DS firmware	875856-001
340GB SATA SSD M.2 dual drive module enablement kit - Includes PCIe3 x8 riser board for dual M.2 module and two SSD drives, RI-2, 6 Gb/s transfer rate - Supports DL/ML Gen9	835802-001
SSD uFF M.2	
240GB SATA, SSD - M.2 MU, SCM, DS	P07721-001
480GB SATA SSD - M.2 2280 MU, DS	P07437-001
SSD NVMe	
375GB SSD - WI, 2.5 in SFF, NVMe x4, Smart Carrier Non-Volatile memory express (SCN), DS	P02559-001

External drive

Description	Spare Part Number
USB powered external +/- RW DVD RAM drive - Maximum 8x DVD +/-R read and write speed, Maximum 24x CD read and write speed - USB 2.0 interface (USB 3.0 compatible) - Does not include external power adapter	775676-001

MicroSD

Description	Spare Part Number
32GB USB Secure Digital High Capacity (SDHC) flash media drive card	704502-001
8GB micro SD enterprise mainstream flash media kit	738576-001
8GB USB flash media key	743503-001
Dual 8GB micro SD enterprise MDL USB kit V3	870891-001

HPE TPM 2.0

Description	Spare Part Number
TPM - Compatible with HPE Gen10 servers running Microsoft Windows Server 2012 R2 or newer, supports TPM 1.2 (Unified Extensible Firmware Interface (UEFI) and legacy mode) and 2.0 (UEFI mode)	872159-001

Cable

Description	Spare Part Number
Customer self repair: mandatory	
Cable front panel Apollo 4200 Gen10	P10060-001
Cable Mini-SAS 36P Straight-Through (STR) High Density (HD) Apollo 4200 G10	P10071-001
Cable 4LFF/2SFF power Apollo 4200 G10	P15889-001
6SFF M-SAS rear Apollo 4200 Gen10	P10077-001
Cable power rear NVMe Apollo 4200 Gen10	P10078-001
Customer self repair: optional	
M-SAS system board A4200 Gen10	P10072-001
Cable fan signal Apollo 4200 Gen10	P10079-001

Option Parts

Subtopics

New model specific parts lists
HPSD BlueDataApollo 4200
Processor
Memory
Power supplies
Additional FIO
Factory integration from core

HPE Unique options
Storage controller enablement kit
Security
HPE Drives
Networking
InfiniBand
Pensando Distributed Services Platform (DSP)
Embedded management
Converged infrastructure management software
PCIe workload accelerator
Storage controllers
Optional software
Storage options
Rack
HPE USB and SD options

New model specific parts lists

IMPORTANT: To obtain current part number information for a specific product model, use the Standard Models page for this product family.

- The product Standard Models page now links the model SKU numbers to the spare parts list for each model found on the **HPE PartSurfer web site**. (To report missing or incorrect parts information in PartSurfer, please use the "Contact us" and "Missing or incorrect data" links within the PartSurfer web site utility.)
- To look up RoHS-compliant information in PartSurfer, use the component's option part number or the sales order number for a system in which the component is used (Available in the QuickSpecs or Standard Models page).

HPSD BlueDataApollo 4200

Description	Option Part Number
HPE Apollo 4200 Gen10 24LFF server for E zmeral container platform	R0R02A

Processor

Description	Option Part Number
Processor option kits(Required processor) [1]	
Intel Xeon-Platinum 8276 (2.2 GHz/28-core/165 W) FIO processor kit	P07918-L21
Intel Xeon-Platinum 8260 (2.4 GHz/24-core/165 W) FIO processor kit	P07917-L21
Intel Xeon-Platinum 8276 (2.2 GHz/28-core/165 W) processor kit	P07918-B21
Intel Xeon-Platinum 8260 (2.4 GHz/24-core/165 W) processor kit	P07917-B21
Intel Xeon-Gold	
Intel Xeon-Gold 6240R (2.4 GHz/24-core/165 W) FIO processor kit	P24706-L21
Intel Xeon-Gold 6240R (2.4 GHz/24-core/165 W) processor kit	P24706-B21
Intel Xeon-Gold 6238R (2.2 GHz/28-core/165 W) FIO processor kit	P24705-L21
Intel Xeon-Gold 6238R (2.2 GHz/28-core/165 W) processor kit	P24705-B21
Intel Xeon-Gold 6230R (2.1 GHz/26-core/150 W) FIO processor kit	P24704-L21
Intel Xeon-Gold 6230R (2.1 GHz/26-core/150 W) processor kit	P24704-B21
Intel Xeon-Gold 6226R (2.9 GHz/16-core/150 W) FIO processor kit	P24703-L21
Intel Xeon-Gold 6226R (2.9 GHz/16-core/150 W) processor kit	P24703-B21
Intel Xeon-Gold 6252 (2.1 GHz/24-core/150 W) FIO processor kit	P07916-L21
Intel Xeon-Gold 6252 (2.1 GHz/24-core/150 W) processor kit	P07916-B21
Intel Xeon-Gold 6248 (2.5 GHz/20-core/150 W) FIO processor kit	P07915-L21

Description	Option Part Number
Intel Xeon-Gold 6248 (2.5 GHz/20-core/150 W) processor kit	P07915-B21
Intel Xeon-Gold 6242 (2.8 GHz/16-core/150 W) FIO processor kit	P07914-L21
Intel Xeon-Gold 6242 (2.8 GHz/16-core/150 W) processor kit	P07914-B21
Intel Xeon-Gold 6240 (2.6 GHz/18-core/150 W) FIO processor kit	P07913-L21
Intel Xeon-Gold 6240 (2.6 GHz/18-core/150 W) processor kit	P07913-B21
Intel Xeon-Gold 6238 (2.1 GHz/22-core/140 W) FIO processor kit	P12710-L21
Intel Xeon-Gold 6238 (2.1 GHz/22-core/140 W) processor kit	P12710-B21
Intel Xeon-Gold 6234 (3.3 GHz/8-core/130 W) FIO processor kit	P12709-L21
Intel Xeon-Gold 6234 (3.3 GHz/8-core/130 W) processor kit	P12709-B21
Intel Xeon-Gold 6230 (2.1 GHz/20-core/125 W) FIO processor kit	P07912-L21
Intel Xeon-Gold 6230 (2.1 GHz/20-core/125 W) processor kit	P07912-B21
Intel Xeon-Gold 6226 (2.7 GHz/12-core/125 W) FIO processor kit.	P12708-L21
Intel Xeon-Gold 6226 (2.7 GHz/12-core/125 W) processor kit	P12708-B21
Intel Xeon-Gold 5220R (2.2 GHz/24-core/150 W) FIO processo r kit	P19705-L21
Intel Xeon-Gold 5220R (2.2 GHz/24-core/150 W) processor kit	P19705-B21
Intel Xeon-Gold 5218R (2.1 GHz/20-core/125 W) FIO processor kit	P24702-L21
Intel Xeon-Gold 5218R (2.1 GHz/20-core/125 W) processor kit	P24702-B21
Intel Xeon-Gold 5220 (2.2 GHz/18-core/125 W) FIO processor kit.	P07911-L21
Intel Xeon-Gold 5220 (2.2 GHz/18-core/125 W) processor kit	P07911-B21

Description	Option Part Number
Intel Xeon-Gold 5218 (2.3 GHz/16-core/125 W) FIO processor kit	P07910-L21
Intel Xeon-Gold 5218 (2.3 GHz/16-core/125 W) processor kit.	P07910-B21
Intel Xeon-Gold 5215 (2.5 GHz/10-core/85 W) FIO processor kit	P07908-L21
Intel Xeon-Gold 5215 (2.5 GHz/10-core/85 W) processor kit	P07908-B21
Intel Xeon-Silver	
Intel Xeon-Silver 4215R (3.2 GHz/8-core/130 W) FIO processor kit	P24701-L21
Intel Xeon-Silver 4215R (3.2 GHz/8-core/130 W) processor kit	P24701-B21
Intel Xeon-Silver 4214R (2.4 GHz/12-core/100 W) FIO processor kit	P19701-L21
Intel Xeon-Silver 4214R (2.4GHz/12-core/100 W) processor kit	P19701-B21
Intel Xeon-Silver 4210R (2.4 GHz/10-core/100 W) FIO processor kit	P19703-L21
Intel Xeon-Silver 4210R (2.4 GHz/10-core/100 W) processor kit	P19703-B21
Intel Xeon-Silver 4216 (2.1 GHz/16-core/100 W) FIO processor kit	P07907-L21
Intel Xeon-Silver 4216 (2.1 GHz/16-core/100 W) processor kit	P07907-B21
Intel Xeon-Silver 4215 (2.5 GHz/8-core/85 W) FIO processor kit.	P07906-L21
Intel Xeon-Silver 4215 (2.5 GHz/8-core/85 W) processor kit	P07906-B21
Intel Xeon-Silver 4214 (2.2 GHz/12-core/85 W) FIO processor kit	P07905-L21
Intel Xeon-Silver 4214 (2.2 GHz/12-core/85 W) processor kit.	P07905-B21
Intel Xeon-Silver 4210 (2.2 GHz/10-core/85 W) FIO processor kit	P07904-L21
Intel Xeon-Silver 4210 (2.2 GHz/10-core/85 W) processor kit	P07904-B21

Description	Option Part Number
Intel Xeon-Silver 4208 (2.1 GHz/8-core/85 W) FIO processor kit	P07903-L21
Intel Xeon-Silver 4208 (2.1 GHz/8-core/85 W) processor kit	P07903-B21
Intel Xeon-Silver 4110 (2.1 GHz/8-core/85 W) processor kit	P08045-B21

NOTE

- **1.**Maximum memory capacity per processor is dependent on processor models. All processors support up to 768GB max memory per processor except "M" model processors will support up to 1.5TB max memory per processor.
- Mixing of 2 different processor models are NOT allowed.
- DDR4 speed is the maximum memory speed of the processor. Actual memory speed may depend on the quantity and type of Dual in-line Memory Modules (DIMMs) installed.

Memory

Description	Description
Registered Dual in-line Memory Modules (RDIMMs) [1]	
HPE 64GB (1 x 64GB) dual rank x4 DDR4-2933 CAS-21-21-21 registered smart memory kit	P00930-K21
HPE 32GB (1 x 32GB) dual rank x4 DDR4-2933 CAS-21-21-21 registered smart memory kit	P00924-K21
HPE 16GB (1 x 16GB) dual rank x8 DDR4-2933 CAS-21-21-21 registered smart memory kit	P00922-K21
RDIMMs	
HPE 32GB (1 x 32GB) single rank x4 DDR4-2933 CAS-21-21-21 registered memory kit	P38446-K21

Description	Description
HPE 16GB (1 x 16GB) single rank x4 DDR4-2933 CAS-21-21-21 registered smart memory kit	P00920-K21
HPE 8GB (1 x 8GB) single rank x8 DDR4-2933 CAS-21-21-21 registered smart memory kit	P00918-K21
HPE 32GB (1 x 32GB) dual rank x4 DDR4-2666 CAS-19-19-19 registered smart memory kit	815100-K21
HPE 16GB (1 x 16GB) dual rank x8 DDR4-2666 CAS-19-19-19 registered smart memory kit	835955-K21
HPE 8GB (1 x 8GB) single rank x8 DDR4-2666 CAS-19-19-19 registered smart memory kit	815097-K21
HPE 16GB (1 x 16GB) single rank x4 DDR4-2666 CAS-19-19-19 registered smart memory kit	815098-K21
Load Reduces Dual in-line Memory Modules (LRDIMMs) [2]	
HPE 128GB (1 x 128GB) quad rank x4 DDR4-2933 CAS-21-21-21 load reduced smart memory kit	P11040-K21
HPE 128GB (1 x 128GB) octal rank x4 DDR4-2933 CAS-24-21-21 load reduced 3DS smart memory kit	P00928-K21
HPE 64GB (1 x 64GB) quad rank x4 DDR4-2933 CAS-21-21-21 load reduced smart memory kit	P00926-K21
HPE 64GB (1 x 64GB) quad rank x4 DDR4-2666 CAS-19-19-19 load reduced smart memory kit	815101-K21
HPE 16GB (1 x 16GB) single rank x4 DDR4-2666 CAS-19-19-19 registered smart memory kit	815102-K21
HPE Persistent memory (Intel optane)	
Intel optane 512GB persistent memory 100 series for HPE	835810-B21
Intel optane 256GB persistent memory 100 series for HPE	835807-B21
Intel optane 128GB persistent memory 100 series for HPE	835804-B21

NOTE

Description	Description

- **1.** DDR4-2933 memory kits are only supported with 2nd Generation Intel Xeon Scalable series processors and DDR4-2666 memory kits are only supported with 1st Generation Intel Xeon scalable series processors.
- Maximum memory capacity per processor is dependent on processor model selection or limitation.
- Maximum memory speed is dependent on processor model selection or limitation.
- **2.** For general server memory population rules and guidelines for Gen10 see details here:
- **Click here to access the Server Memory Population Rules and Guidelines for Gen10**.

Power supplies

Description	Option Part Number
HPE Flex slot power supplies	
HPE 800 W flex slot Platinum hot-plug low halogen power supply kit	865414-B21
HPE 800 W flex slot Titanium hot-plug low halogen power supply kit	865438-B21
HPE 800 W flex slot Universal hot-plug low halogen power supply kit	865428-B21
HPE 800 W flex slot -48 V dc hot-plug low halogen power supply kit	865434-B21
HPE 1600 W flex slot Platinum hot-plug low halogen power supply kit	830272-B21
HPE 1800W-2200W Flex Slot Titanium Hot Plug Power Supply Kit	P44712-B21

NOTE

Description	Option Part Number
1600 W Power supplies only support high line voltage (200 V ac to 240 V a c).	

Additional FIO

Description	Option Part Number
HPE Legacy FIO mode setting[1]	758959-B22

NOTE

1. UEFI is the default, this FIO part can be used for Configure-To-Order (CTO) to enable legacy mode.

Factory integration from core

Description	Option Part Number
HPE OneView for ProLiant DL server including 3-year 24x7 support FIO bundle physical 1-server LTU	E5Y43A
HPE OneView without integrated Lights Out (iLO) including 3-year 24x7 support 1-server FIO LTU	P8B31A

HPE Unique options

Description	Option Part Number
Rear storage upgrades	
HPE Apollo 4200 Gen10 6 Small Form Factor (SFF) SAS/SATA rear drive cage kit	P14010-B21
HPE Apollo 4200 Gen10 LFF4 rear drive cage kit[1]	P07943-B21
HPE Apollo 4200 Gen10 SFF 2 rear drive cage and 2 Full-Height, Half-Length (FHHL) riser kit[2]	P07248-B21
HPE Apollo 4200 Gen10 6 SFF Non-Volatile Memory express (NVMe) rear drive cage kit[3]	P07250-B21
HPE Apollo 4200 rear drive blank FIO kit	P08010-B21
Rear drive cage controller mode	
HPE 2nd cage FIO controller mode for rear storage[4]	813546-B21
HPE Software RAID FIO controller mode for rear storage[5]	P09655-B21
HPE Smart Array E/P SR FIO controller mode for rear storage[6]	P09656-B21
HPE NVMe CPU2 x6 FIO controller mode for rear storage[7]	P09657-B21
HPE NVMe CPU1 x4/CPU2 x2 FIO controller mode for rear storage[8]	P09658-B21

NOTE

1. When this SKU is selected, one of the following 3 FIO controller modes must be selected: HPE 2nd cage FIO controller mode for rear storage (813546-B21), HPE Software RAID FIO controller mode for rear storage (P09655-B21) or HPE Smart Array E/P SR FIO controller mode for rear st orage (P09656-B21).
2.
   - When this kit is installed, the PCIe slot 2 will be unavailable due to o ccupation of the riser.
   - When this SKU is selected, one of the following 3 FIO controller mo des must be selected: HPE 2nd cage FIO controller mode for rear st orage (813546-B21), HPE Software RAID FIO controller mode for rear

storage (P09655-B21) or HPE Smart Array E/P SR FIO controller mod e for rear storage (P09656-B21).

3.

- When this SKU is selected, one of the following 2 FIO controller m odes can be selected: HPE NVMe CPU2 x6 FIO controller mode for rear storage (P09657-B21) or HPE NVMe CPU1 x4/CPU2 x2 FIO cont roller mode for rear storage (P09658-B21).
- When no controller mode is selected, all 6 SFF NVMe will be connec ted to processor 1 through PCIe slot 2.
- When HPE NVMe CPU2 x6 FIO controller mode for rear storage (P09 657-B21) is selected, all 6 SFF NVMe Solid State Drives (SSDs) will be connected to processor 2 through PCIe slot 6.
- When HPE NVMe CPU1 x4/CPU2 x2 FIO controller mode for rear sto rage (P09658-B21) is selected, 4 SFF NVMe SSDs will be connected to processor 1 through PCIe slot 2 and 4 SFF NVMe SSDs will be con nected to processor 1 through PCIe slot 2.

4.

- When this SKU is selected, the rear drive cage will be connected to front 2nd drive bay and under the same controller as the front 2nd d rive bay.
- Mixed drive form factor is not supported. When this SKU is selected, the from factor of the rear drive and te front 2nd drive bay has to be the same (All SFF ot all LFF).

5. When this SKU is selected, the rear dirve cage will be connected to onb oard S100i SW RAID controller.
6. When this SKU is selected, the rear drive cage will be connected to ind ependet type i-p controller.
7. When this SKU is selected, all 6 SFF NVMe SSDs will be connected to p rocessor 2 through PCIe slot 6.
8. When this SKU is selected, 4 SFF NVMe SSDs will be connected to proc essor 1 through PCIe slot 2 and 4 SFF NVMe SSDs will be connected to processor 1 through PCIe slot 2.

Storage controller enablement kit

Description	Option Part Number
HPE Apollo 4200 P824i-p enablement kit	P11274-B21

Security

Description	Option Part Number
HPE Trusted Platform Module (TPM) 2.0 Gen10 option	864279-B21
HPE Gen10 2U bezel kit	867809-B21
HPE Bezel lock kit	875519-B21

HPE Drives

Description	Option Part Number
Enterprise -12G SAS -SFF drives	
HPE 2.4TB SAS 12G Enterprise 10K SFF (2.5 in) SC 3-year warranty 512e Digitally Signed (DS) firmware HDD	881457-K21
HPE 1.8TB SAS 12G Enterprise 10K SFF (2.5 in) SC 3-year warranty 512e DS firmware HDD	872481-K21
HPE 1.2TB SAS 12G Enterprise 10K SFF (2.5 in) SC 3-year warranty DS firmware HDD	872479-K21
HPE 900GB SAS 12G Enterprise 15K SFF (2.5 in) SC 3-year warranty DS firmware HDD	870759-K21

Description	Option Part Number
HPE 600GB SAS 12G Enterprise 10K SFF (2.5 in) SC 3-year warranty DS firmware HDD	872477-K21
HPE 600GB SAS 12G Enterprise 15K SFF (2.5 in) SC 3-year warranty DS firmware HDD	870757-K21
HPE 300GB SAS 12G Enterprise 10K SFF (2.5 in) SC 3-year warranty DS firmware HDD	872475-K21
HPE 300GB SAS 12G Enterprise 15K SFF (2.5 in) SC 3-year warranty DS firmware HDD	870753-K21
Midline (MDL) -6G SATA -LFF drives	
HPE 10TB SATA 6G MDL 7.2K LFF (3.5 in) LP 1-year warranty He 512e DS 6-pack FIO HDD	P09797-K21
HPE 20TB SATA 6G Business Critical 7.2K LFF LP 1-year Warranty Helium 512e ISE Multi Vendor HDD	P53554-K21
HPE 18TB SATA 6G business critical 7.2K LFF LP 1-year warranty 512e ISE HDD	P37678-K21
HPE 16TB SATA 6G business critical 7.2K LFF (3.5 in) LP 1-year warranty 512e ISE HDD	P23449-K21
HPE 14TB SATA 6G MDL 7.2K LFF (3.5 in) LP 1-year warranty helium 512e DS firmware HDD	P09165-K21
HPE 12TB SATA 6G MDL 7.2K LFF (3.5 in) LP 1-year warranty helium 512e DS firmware HDD	881787-K21
HPE 10TB SATA 6G Business Critical 7.2K LFF LP 1-year Warranty 512e ISE Multi Vendor HDD	P53557-K21
HPE 10TB SATA 6G MDL 7.2K LFF (3.5 in) LP 1-year warranty helium 512e DS firmware HDD	P09161-K21
HPE 8TB SATA 6G MDL 7.2K LFF (3.5 in) LP 1-year warranty 512e DS firmware HDD	834028-K21
HPE 6TB SATA 6G MDL 7.2K LFF (3.5 in) LP 1-year warranty 512e HDD	861742-K21
HPE 4TB SATA 6G MDL 7.2K LFF (3.5 in) LP 1-year warranty DS firmware HDD	861683-K21

Description	Option Part Number
HPE 2TB SATA 6G MDL 7.2K LFF (3.5 in) LP 1-year warranty DS firm ware HDD	861681-K21
HPE 1TB SATA 6G MDL 7.2K LFF (3.5 in) LP 1-year warranty DS firm ware HDD	861686-K21
MDL 6G SATA -SFF drives	
HPE 2TB SATA 6G MDL 7.2K SFF (2.5 in) SC 1-year warranty 512e DS firmware HDD	765455-K21
HPE 1TB SATA 6G MDL 7.2K SFF (2.5 in) SC 1-year warranty DS firm ware HDD	655710-K21
MDL -12G SAS -LFF drives	
HPE 10TB SAS 12G MDL 7.2K LFF (3.5 in) LP 1-year warranty He 512 e DS 6-pack FIO HDD	P09799-K21
HPE 20TB SAS 12G Business Critical 7.2K LFF LP 1-year Warranty H elium 512e ISE Multi Vendor HDD	P53553-K21
HPE 18TB SAS 12G business critical 7.2K LFF LP 1-year warranty 51 2e ISE HDD	P37669-K21
HPE 16TB SAS 12G business critical 7.2K LFF (3.5 in) LP 1-year war ranty 512e ISE HDD	P23608-K21
HPE 14TB SAS 12G MDL 7.2K LFF (3.5 in) LP 1-year warranty helium 512e DS firmware HDD	P09155-K21
HPE 12TB SAS 12G MDL 7.2K LFF (3.5 in) LP 1-year warranty helium 512e DS firmware HDD	881781-K21
HPE 10TB SAS 12G Business Critical 7.2K LFF LP 1-year Warranty 51 2e ISE Multi Vendor HDD	P53556-K21
HPE 10TB SAS 12G MDL 7.2K LFF (3.5 in)LP 1-year warranty helium 512e DS firmware HDD	P09149-K21
HPE 8TB SAS 12G MDL 7.2K LFF (3.5 in) LP 1-year warranty 512e DS firmware HDD	834031-K21
HPE 6TB SAS 12G MDL 7.2K LFF (3.5 in) LP 1-year warranty 512e H DD	861746-K21
HPE 4TB SAS 12G MDL 7.2K LFF (3.5 in) LP 1-year warranty DS firm ware HDD	833928-K21

Description	Option Part Number
HPE 2TB SAS 12G MDL 7.2K LFF (3.5 in) LP 1-year warranty DS firm ware HDD	833926-K21
MDL -12G SAS -SFF drives	
HPE 2TB SAS 12G MDL 7.2K SFF (2.5 in) SC 1-year warranty 512e H DD	765466-K21
HPE 1TB SAS 12G MDL 7.2K SFF (2.5 in) SC 1-year warranty DS firm ware HDD	832514-K21
Read Intensive (RI) -24G SAS -SFF - SSDs	
HPE 15.3TB SAS 24G RI SFF SC PM6 SSD	P26314-K21
HPE 7.68TB SAS 24G RI SFF SC PM6 SSD	P26310-K21
HPE 1.92TB SAS 24G RI SFF SC PM6 SSD	P26302-K21
HPE 3.84TB SAS 24G RI SFF SC PM6 SSD	P26306-K21
HPE 960GB SAS 24G RI SFF SC PM6 SSD	P26285-K21
Mixed Use (MU) -24G SAS -SFF - SSDs	
HPE 6.4TB SAS 24G MU SFF SC PM6 SSD	P26362-K21
HPE 3.2TB SAS 24G MU SFF SC PM6 SSD	P26358-K21
HPE 1.6TB SAS 24G MU SFF SC PM6 SSD	P26354-K21
HPE 800GB SAS 24G MU SFF SC PM6 SSD	P26290-K21
Write Intensive (WI) -24G SAS -SFF - SSDs	
HPE 1.6TB SAS 24G WI SFF SC PM6 SSD	P26376-K21
HPE 800GB SAS 24G WI SFF SC PM6 SSD	P26372-K21
HPE 400GB SAS 24G WI SFF SC PM6 SSD	P26295-K21
RI -12G SAS -SFF -SSDs	
HPE 7.68TB SAS 12G RI SFF SC value SAS multi vendor SSD	P37003-K21
HPE 3.84TB SAS 12G RI SFF SC value SAS multi vendor SSD	P37001-K21

Description	Option Part Number
HPE 1.92TB SAS 12G RI SFF SC value SAS multi vendor SSD	P36999-K21
HPE 960GB SAS 12G RI SFF SC value SAS multi vendor SSD	P36997-K21
HPE 960GB SAS 12G Read Intensive SFF SC Multi Vendor SSD	P49028-K21
HPE 1.92TB SAS 12G Read Intensive SFF SC Multi Vendor SSD	P49030-K21
HPE 3.84TB SAS 12G Read Intensive SFF SC Multi Vendor SSD	P49034-K21
HPE 7.68TB SAS 12G Read Intensive SFF SC Multi Vendor SSD	P49039-K21
HPE 15.36TB SAS 12G Read Intensive SFF SC Multi Vendor SSD	P49044-K21
HPE 15.3TB SAS 12G RI SFF SC SS540 SSD	P21147-K21
HPE 7.68TB SAS 12G RI SFF SC SS540 SSD	P21145-K21
HPE 7.68TB SAS 12G RI SFF SC value SAS RM5 SSD	P10446-K21
HPE 3.84TB SAS 12G RI SFF SC SS540 SSD	P21143-K21
HPE 3.84TB SAS 12G RI SFF SC value SAS RM5 SSD	P10444-K21
HPE 1.92TB SAS 12G RI SFF SC SS540 SSD	P21141-K21
HPE 1.92TB SAS 12G RI SFF SC PM1643a SSD	P19905-K21
HPE 1.92TB SAS 12G RI SFF SC value SAS RM5 SSD	P10442-K21
HPE 960GB SAS 12G RI SFF SC SS540 SSD	P21139-K21
HPE 960GB SAS 12G RI SFF SC value SAS RM5 SSD	P10440-K21
HPE 7.68TB SAS 12G RI SFF SC PM1643a SSD	P19909-K21
HPE 7.68TB SAS 12G RI SFF SC PM5 SSD	P04523-K21
HPE 3.84TB SAS 12G RI SFF SC PM1643a SSD	P19907-K21
HPE 3.84TB SAS 12G RI SFF SC PM5 SSD	P04521-K21
HPE 1.92TB SAS 12G RI SFF SC PM5 SSD	P04519-K21
HPE 960GB SAS 12G RI SFF SC PM1643a SSD	P19903-K21
HPE 960GB SAS 12G RI SFF SC PM5 SSD	P04517-K21
HPE 15.36TB SAS 12G RI SFF SC PM1643a SSD	P19911-K21

Description	Option Part Number
MU -12G SAS -SFF - SSDs	
HPE 3.84TB SAS 12G MU SFF SC value SAS multi vendor SSD	P37017-K21
HPE 1.92TB SAS 12G MU SFF SC value SAS multi vendor SSD	P37011-K21
HPE 960GB SAS 12G MU SFF SC value SAS multi vendor SSD	P37005-K21
HPE 800GB SAS 12G Mixed Use SFF SC Multi Vendor SSD	P49046-K21
HPE 1.6TB SAS 12G Mixed Use SFF SC Multi Vendor SSD	P49048-K21
HPE 3.2TB SAS 12G Mixed Use SFF SC Multi Vendor SSD	P49052-K21
HPE 6.4TB SAS 12G Mixed Use SFF SC Multi Vendor SSD	P49056-K21
HPE 6.4TB SAS 12G MU SFF SC SS540 SSD	P21137-K21
HPE 6.4TB SAS 12G MU SFF SC PM1645a SSD	P19919-K21
HPE 6.4TB SAS 12G MU SFF SC PM5 SSD	P04539-K21
HPE 3.84TB SAS 12G MU SFF SC value SAS RM5 SSD	P10460-K21
HPE 3.2TB SAS 12G MU SFF SC SS540 SSD	P21135-K21
HPE 3.2TB SAS 12G MU SFF SC PM1645a SSD	P19917-K21
HPE 3.2TB SAS 12G MU SFF SC PM5 SSD	P04537-K21
HPE 1.92TB SAS 12G MU SFF SC value SAS RM5 SSD	P10454-K21
HPE 1.6TB SAS 12G MU SFF SC SS540 SSD	P21133-K21
HPE 1.6TB SAS 12G MU SFF SC PM1645a SSD	P19915-K21
HPE 1.6TB SAS 12G MU SFF SC PM5 SSD	P04533-K21
HPE 960GB SAS 12G MU SFF SC value SAS RM5 SSD	P10448-K21
HPE 800GB SAS 12G MU SFF SC SS540 SSD	P21131-K21
HPE 800GB SAS 12G MU SFF SC PM1645a SSD	P19913-K21
HPE 800GB SAS 12G MU SFF SC PM5 SSD	P04527-K21
HPE 400GB SAS 12G MU SFF (2.5 in) SC 3-year warranty DS firmware SSD	P04525-K21

Description	Option Part Number
WI -12G SAS -SFF -SSDs	
HPE 1.6TB SAS 12G WI SFF SC SS540 SSD	P21129-K21
HPE 1.6TB SAS 12G WI SFF SC PM5 SSD	P04545-K21
HPE 800GB SAS 12G WI SFF SC SS540 SSD	P21127-K21
HPE 800GB SAS 12G WI SFF SC PM5 SSD	P04543-K21
HPE 400GB SAS 12G WI SFF SC SS540 SSD	P21125-K21
HPE 400GB SAS 12G WI SFF SC PM5 SSD	P04541-K21
Read Intensive - 24G SAS - LFF - Solid State Drives	
HPE 7.68TB SAS 24G Read Intensive LFF LPC Multi Vendor SSD	P49040-K21
MU -12G SAS -LFF -SSDs	
HPE 960GB SAS 12G MU LFF LPC value SAS multi vendor SSD	P37009-K21
HPE 3.84TB SAS 12G MU LFF LPC value SAS RM5 SSD	P10462-K21
HPE 1.92TB SAS 12G MU LFF LPC value SAS RM5 SSD	P10458-K21
HPE 960GB SAS 12G MU LFF LPC value SAS RM5 SSD	P10452-K21
HPE 1.6TB SAS 12G MU LFF LPC PM5 SSD	P04535-K21
RI -PCIe/NVMe -SFF -SSDs	
HPE 7.68TB NVMe Gen4 High Performance Read Intensive SFF SC N U.3 PM1733a SSD	P50220-K21
HPE 3.84TB NVMe Gen4 High Performance Read Intensive SFF SCN U.3 PM1733a SSD	P50217-K21
HPE 1.92TB NVMe Gen4 High Performance Read Intensive SFF SC N U.3 PM1733a SSD	P50214-K21
HPE 1.92TB NVMe Gen4 High Performance Read Intensive SFF SC N Self-encrypting FIPS U.3 CM6 SSD	P44572-K21
HPE 3.84TB NVMe Gen4 High Performance Read Intensive SFF SCN Self-encrypting FIPS U.3 CM6 SSD	P44580-K21
HPE 1.92TB NVMe Gen4 High Performance Read Intensive SFF SC N U.2 P5520 SSD	P51452-K21
HPE 3.84TB NVMe Gen4 High Performance Read Intensive SFF SCN U.2 P5520 SSD	P51454-K21

Description	Option Part Number
HPE 7.68TB NVMe Gen4 High Performance Read Intensive SFF SC N U.2 P5520 SSD	P51456-K21
HPE 1.92TB NVMe Gen4 Mainstream Performance Read Intensive SFF SCN U.2 V2 Multi Vendor SSD	P64874-K21
HPE 3.84TB NVMe Gen4 Mainstream Performance Read Intensive SFF SCN U.2 V2 Multi Vendor SSD	P64882-K21
HPE 7.68TB NVMe Gen4 Mainstream Performance Read Intensive SFF SCN U.2 V2 Multi Vendor SSD	P64890-K21
HPE 7.68TB NVMe Gen4 mainstream performance RI SFF SCN U.3 PE8010 SSD	P19821-K21
HPE 3.84TB NVMe Gen4 mainstream performance RI SFF SCN U.3 PE8010 SSD	P19817-K21
HPE 1.92TB NVMe Gen4 mainstream performance RI SFF SCN U.3 PE8010 SSD	P19813-K21
HPE 960GB NVMe Gen4 mainstream performance RI SFF SCN U.3 PE8010 SSD	P19809-K21
HPE 7.68TB NVMe Gen4 high performance RI SFF SCN U.3 CM6 SSD	P20021-K21
HPE 3.84TB NVMe Gen4 high performance RI SFF SCN U.3 CM6 SSD	P20019-K21
HPE 1.92TB NVMe Gen4 high performance RI SFF SCN U.3 CM6 SSD	P20017-K21
HPE 960GB NVMe Gen4 high performance RI SFF SCN U.3 CM6 SSD	P20015-K21
HPE 15.36TB NVMe Gen4 mainstream performance RI SFF SCN U.3 CD6 SSD	P20145-K21
HPE 7.68TB NVMe Gen4 mainstream performance RI SFF SCN U.3 CD6 SSD	P20143-K21
HPE 3.84TB NVMe Gen4 mainstream performance RI SFF SCN U.3 CD6 SSD	P20141-K21
HPE 1.92TB NVMe Gen4 mainstream performance RI SFF SCN U.3 CD6 SSD	P20139-K21
HPE 960GB NVMe Gen4 mainstream performance RI SFF SCN U.3 CD6 SSD	P25944-K21

Description	Option Part Number
HPE 15.36TB NVMe Gen4 high performance RI SFF SCN U.3 PM1 733 SSD	P22282-K21
HPE 7.68TB NVMe Gen4 high performance RI SFF SCN U.3 PM1 733 SSD	P22280-K21
HPE 3.84TB NVMe Gen4 high performance RI SFF SCN U.3 PM1 733 SSD	P22278-K21
HPE 1.92TB NVMe Gen4 high performance RI SFF SCN U.3 PM1 733 SSD	P22276-K21
HPE 960GB NVMe Gen4 high performance RI SFF SCN U.3 PM1 733 SSD	P22331-K21
HPE 7.68TB NVMe x4 lanes RI SFF (2.5 in) SCN 3-year warranty DS firmware SSD	P07196-K21
HPE 7.68TB NVMe Gen3 mainstream performance RI SFF SCN U.2 PE6011 SSD	P13682-K21
HPE 3.84TB NVMe x4 lanes RI SFF (2.5 in) SCN 3-year warranty DS firmware SSD	P10216-K21
HPE 3.84TB NVMe x4 lanes RI SFF (2.5 in) SCN 3-year warranty DS firmware SSD	P10212-K21
HPE 15.36TB NVMe Gen3 high performance RI SFF SCN U.2 CM5 SSD	P07198-K21
HPE 3.84TB NVMe x4 lanes RI SFF (2.5 in) SCN 3-year warranty DS firmware SSD	P07194-K21
HPE 1.92TB NVMe x4 lanes RI SFF (2.5 in) SCN 3-year warranty DS firmware SSD	P10210-K21
HPE 1.92TB NVMe x4 lanes RI SFF (2.5 in) SCN 3-year warranty DS firmware SSD	P10214-K21
HPE 1.92TB NVMe x4 lanes RI SFF (2.5 in) SCN 3-year warranty DS firmware SSD	P07192-K21
HPE 1.92TB NVMe Gen3 mainstream performance RI SFF SCN U.2 PE6011 SSD	P13678-K21
HPE 3.84TB NVMe Gen3 mainstream performance RI SFF SCN U.2 PE6011 SSD	P13680-K21

Description	Option Part Number
HPE 960GB NVMe x4 lanes RI SFF (2.5 in) SCN 3-year warranty DS firmware SSD	P07190-K21
HPE 960GB NVMe Gen3 mainstream performance RI SFF SCN U.2 PE6011 SSD	P13676-K21
HPE 4TB NVMe Gen3 high performance RI SFF SCN U.2 P4510 SSD	P13697-K21
HPE 2TB NVMe Gen3 high performance RI SFF SCN U.2 P4510 SSD	P13695-K21
RI -SATA -SFF -SSDs	
HPE 7.68TB SATA 6G RI SFF (2.5 in) SC 3-year warranty multi vendor SSD	P18430-K21
HPE 7.68TB SATA 6G RI SFF SC 5300P SSD	P19945-K21
HPE 7.68TB SATA 6G RI SFF (2.5 in) SC 3-year warranty DS firmware SSD	P04482-K21
HPE 3.84TB SATA 6G RI SFF (2.5 in) SC 3-year warranty multi vendor SSD	P18428-K21
HPE 3.84TB SATA 6G RI SFF SC 5300P SSD	P19943-K21
HPE 3.84TB SATA 6G RI SFF SC S4510 SSD	P05946-K21
HPE 3.84TB SATA 6G RI SFF SC PM883 SSD	P04570-K21
HPE 3.84TB SATA 6G RI SFF SC SE4011 SSD	P06200-K21
HPE 1.92TB SATA 6G RI SFF (2.5 in) SC 3-year warranty multi vendor SSD	P18426-K21
HPE 1.92TB SATA 6G RI SFF SC 5300P SSD	P19941-K21
HPE 1.92TB SATA 6G RI SFF SC S4510 SSD	P05938-K21
HPE 1.92TB SATA 6G RI SFF SC SE4011 SSD	P06198-K21
HPE 1.92TB SATA 6G RI SFF SC PM883 SSD	P04566-K21
HPE 960GB SATA 6G RI SFF (2.5 in) SC 3-year warranty multi vendor SSD	P18424-K21

Description	Option Part Number
HPE 960GB SATA 6G RI SFF SC 5300P SSD	P19939-K21
HPE 960GB SATA 6G RI SFF SC S4510 SSD	P05932-K21
HPE 960GB SATA 6G RI SFF (2.5 in)SC 3-year warranty DS firmwar e SSD	P04476-K21
HPE 960GB SATA 6G RI SFF SC SE4011 SSD	P06196-K21
HPE 960GB SATA 6G RI SFF SC PM883 SSD	P04564-K21
HPE 480GB SATA 6G RI SFF (2.5 in) SC 3-year warranty multi vend or SSD	P18422-K21
HPE 480GB SATA 6G RI SFF SC 5300P SSD	P19937-K21
HPE 480GB SATA 6G RI SFF SC S4510 SSD	P05928-K21
HPE 480GB SATA 6G RI SFF SC SE4011 SSD	P06194-K21
HPE 480GB SATA 6G RI SFF SC PM883 SSD	P04560-K21
HPE 240GB SATA 6G RI SFF (2.5 in) SC 3-year warranty multi vend or SSD	P18420-K21
HPE 480GB SATA 6G Read Intensive SFF SC PM893 SSD	P47810-K21
HPE 960GB SATA 6G Read Intensive SFF SC PM893 SSD	P47811-K21
HPE 1.9TB SATA 6G Read Intensive SFF SC PM893 SSD	P47812-K21
HPE 3.84TB SATA 6G Read Intensive SFF SC PM893 SSD	P47813-K21
HPE 480GB SATA 6G Read Intensive SFF SC PM893a SSD	P63890-K21
HPE 3.84TB SATA 6G Read Intensive SFF SC PM893a SSD	P63914-K21
HPE 240GB SATA 6G RI SFF SC 5300P SSD	P19935-K21
HPE 240GB SATA 6G RI SFF SC S4510 SSD	P05924-K21
HPE 240GB SATA 6G RI SFF SC PM883 SSD	P04556-K21
HPE 1.92TB SATA 6G RI LFF LPC 5300P SSD	P19976-K21
HPE 960GB SATA 6G RI LFF LPC PM883 SSD	P09691-K21
HPE 480GB SATA 6G RI LFF LPC 5300P SSD	P19974-K21
HPE 1.92TB SATA 6G Very Read Optimized SFF SC 5210 SSD	P23487-B21

Description	Option Part Number
HPE 3.84TB SATA 6G Very Read Optimized SFF SC 5210 SSD	P23489-B21
HPE 7.68TB SATA 6G Very Read Optimized SFF SC 5210 SSD	P23493-B21
HPE 3.84TB SATA 6G Very Read Optimized LFF LPC 5210 SSD	P23491-B21
HPE 7.68TB SATA 6G Very Read Optimized LFF LPC 5210 SSD	P23495-B21
HPE 6.4TB NVMe Gen4 mainstream performance MU SFF SCN U.3 PE8030 SSD	P19837-K21
HPE 3.2TB NVMe Gen4 mainstream performance MU SFF SC U.3 PE8030 SSD	P19833-K21
HPE 1.6TB NVMe Gen4 mainstream performance MU SFF SCN U.3 PE8030 SSD	P19829-K21
HPE 800GB NVMe Gen4 mainstream performance MU SFF SCN U.3 PE8030 SSD	P19825-K21
HPE 6.4TB NVMe Gen4 High Performance MU SFF SCN U.3 CM6 SSD	P20100-K21
HPE 3.2TB NVMe Gen4 High Performance MU SFF SCN U.3 CM6 SSD	P20098-K21
HPE 1.6TB NVMe Gen4 High Performance MU SFF SCN U.3 CM6 SSD	P20096-K21
HPE 800GB NVMe Gen4 High Performance MU SFF SCN U.3 CM6 SSD	P20094-K21
HPE 12.8TB NVMe Gen4 mainstream performance MU SFF SCN U.3 CD6 SSD	P20209-K21
HPE 6.4TB NVMe Gen4 mainstream performance MU SFF SCN U.3 CD6 SSD	P20207-K21
HPE 3.2TB NVMe Gen4 mainstream performance MU SFF SCN U.3 CD6 SSD	P20205-K21
HPE 1.6TB NVMe Gen4 mainstream performance MU SFF SCN U.3 CD6 SSD	P20203-K21
HPE 800GB NVMe Gen4 mainstream performance MU SFF SCN U.3 CD6 SSD	P25953-K21

Description	Option Part Number
HPE 12.8TB NVMe Gen4 high performance MU SFF SCN U.3 PM1735 SSD	P22274-K21
HPE 6.4TB NVMe Gen4 high performance MU SFF SCN U.3 PM1735 SSD	P22272-K21
HPE 3.2TB NVMe Gen4 high performance MU SFF SCN U.3 PM1735 SSD	P22270-K21
HPE 1.6TB NVMe Gen4 high performance MU SFF SCN U.3 PM1735 SSD	P22268-K21
HPE 800GB NVMe Gen4 high performance MU SFF SCN U.3 PM1735 SSD	P22329-K21
HPE 6.4TB NVMe Gen3 high performance MU SFF SCN U.2 P4610 SSD	P13703-K21
HPE 3.2TB NVMe Gen3 high performance MU SFF SCN U.2 P4610 SSD	P13701-K21
HPE 1.6TB NVMe Gen3 high performance MU SFF SCN U.2 P4610 SSD	P13699-K21
HPE 6.4TB NVMe x4 lanes MU SFF (2.5 in) SCN 3-year warranty DS firmware SSD	P10226-K21
HPE 3.2TB NVMe x4 lanes MU SFF (2.5 in) SCN 3-year warranty DS firmware SSD	P10224-K21
HPE 1.6TB NVMe x4 lanes MU SFF (2.5 in) SCN 3-year warranty DS firmware SSD	P10222-K21
HPE 1.6TB NVMe Gen3 mainstream performance MU SFF SCN U.2 PE6031 SSD	P13670-K21
HPE 6.4TB NVMe x4 lanes MU SFF (2.5 in) SCN 3-year warranty DS firmware SSD	P07185-K21
HPE 6.4TB NVMe Gen3 mainstream performance MU SFF SCN U.2 PE6031 SSD	P13674-K21
HPE 3.2TB NVMe x4 lanes MU SFF (2.5 in) SCN 3-year warranty DS firmware SSD	P07183-K21
HPE 3.2TB NVMe Gen3 mainstream performance MU SFF SCN U.2 PE6031 SSD	P13672-K21

Description	Option Part Number
HPE 800GB NVMe x4 lanes MU SFF (2.5 in) SCN 3-year warranty DS firmware SSD	P07179-K21
HPE 800GB NVMe Gen3 mainstream performance MU SFF SCN U.2 PE6031 SSD	P13668-K21
WI -PCIe/NVMe -SFF -SSDs	
HPE 750GB NVMe Gen3 high performance low latency WI SFF SC N U.2 P4800X SSD	P06952-K21
HPE 375GB NVMe Gen3 high performance low latency WI SFF SC N U.2 P4800X SSD	878014-K21
Read Intensive - SATA - LFF - Solid State Drives	
HPE 960GB SATA 6G Read Intensive LFF LPC Multi Vendor SSD	P47808-K21
HPE 7.68TB SATA 6G Very Read Optimized LFF LPC 5400 SSD	P58232-K21
Mixed Use - PCIe/NVMe - SFF - Solid State Drives	
HPE 6.4TB NVMe Gen4 High Performance Mixed Use SFF SCN U.3 PM1735a SSD	P50231-K21
HPE 3.2TB NVMe Gen4 High Performance Mixed Use SFF SCN U.3 PM1735a SSD	P50228-K21
HPE 1.6TB NVMe Gen4 High Performance Mixed Use SFF SCN U.3 PM1735a SSD	P50225-K21
HPE 1.6TB NVMe Gen4 High Performance Mixed Use SFF SCN Sel f-encrypting FIPS U.3 CM6 SSD	P44588-K21
HPE 3.2TB NVMe Gen4 High Performance Mixed Use SFF SCN Sel f-encrypting FIPS U.3 CM6 SSD	P44596-K21
HPE 1.6TB NVMe Gen4 High Performance Mixed Use SFF SCN Sel f-encrypting FIPS U.3 CM6 SSD	P44588-K21
HPE 3.2TB NVMe Gen4 High Performance Mixed Use SFF SCN Sel f-encrypting FIPS U.3 CM6 SSD	P44596-K21
HPE 1.6TB NVMe Gen4 High Performance Mixed Use SFF SCN U.2 P5620 SSD	P51458-K21
HPE 3.2TB NVMe Gen4 High Performance Mixed Use SFF SCN U.2 P5620 SSD	P51460-K21
HPE 6.4TB NVMe Gen4 High Performance Mixed Use SFF SCN U.2 P5620 SSD	P51462-K21
HPE 1.6TB NVMe Gen4 Mainstream Performance Mixed Use SFF SCN U.2 V2 Multi Vendor SSD	P64870-K21

Description	Option Part Number
HPE 3.2TB NVMe Gen4 Mainstream Performance Mixed Use SFF SCN U.2 V2 Multi Vendor SSD	P64878-K21
HPE 6.4TB NVMe Gen4 Mainstream Performance Mixed Use SFF SCN U.2 V2 Multi Vendor SSD	P64886-K21
MU -SATA -SFF -SSDs	
HPE 3.84TB SATA 6G MU SFF (2.5 in) SC 3-year warranty multi ven dor SSD	P18438-K21
HPE 3.84TB SATA 6G MU SFF SC 5300M SSD	P19953-K21
HPE 3.84TB SATA 6G MU SFF SC S4610 SSD	P05994-K21
HPE 3.84TB SATA 6G MU SFF RW SE5031 SSD	P13664-K21
HPE 3.84TB SATA 6G MU SFF SC SM883 SSD	P21517-K21
HPE 1.92TB SATA 6G MU SFF (2.5 in) SC 3-year warranty multi ven dor SSD	P18436-K21
HPE 1.92TB SATA 6G MU SFF SC 5300M SSD	P19951-K21
HPE 1.92TB SATA 6G MU SFF SC S4610 SSD	P05986-K21
HPE 1.92TB SATA 6G MU SFF SC SM883 SSD	P09722-K21
HPE 1.92TB SATA 6G MU SFF SC SE5031 SSD	P13662-K21
HPE 960GB SATA 6G MU SFF (2.5 in) SC 3-year warranty multi ve ndor SSD	P18434-K21
HPE 960GB SATA 6G MU SFF SC 5300M SSD	P19949-K21
HPE 960GB SATA 6G MU SFF SC S4610 SSD	P05980-K21
HPE 960GB SATA 6G MU SFF SC SM883 SSD	P09716-K21
HPE 960GB SATA 6G MU SFF SC SE5031 SSD	P13660-K21
HPE 480GB SATA 6G MU SFF SC S4610 SSD	P05976-K21
HPE 480GB SATA 6G MU SFF (2.5 in) SC 3-year warranty multi ven dor SSD	P18432-K21
HPE 480GB SATA 6G Mixed Use SFF SC PM897 SSD	P47814-K21
HPE 960GB SATA 6G Mixed Use SFF SC PM897 SSD	P47815-K21

Description	Option Part Number
HPE 1.92TB SATA 6G Mixed Use SFF SC PM897 SSD	P47816-K21
HPE 480GB SATA 6G MU SFF SC 5300M SSD	P19947-K21
HPE 480GB SATA 6G MU SFF (2.5 in) SC 3-year warranty DS firmware SSD	P07922-K21
HPE 480GB SATA 6G MU SFF SC SM883 SSD	P09712-K21
HPE 480GB SATA 6G MU SFF SC SE5031 SSD	P13658-K21w
Read Intensive - M.2 - Solid State Drives (2280 type)	
HPE 240GB SATA 6G Read Intensive M.2 Multi Vendor SSD	P47817-K21
HPE 480GB SATA 6G Read Intensive M.2 Multi Vendor SSD	P47818-K21
MU -SATA -LFF -SSDs	
HPE 1.92TB SATA 6G MU LFF LPC 5300M SSD	P19984-K21
HPE 1.92TB SATA 6G MU LFF LPC SM883 SSD	P09726-K21
HPE 960GB SATA 6G MU LFF LPC 5300M SSD	P19980-K21
Dual SATA 6G M.2 - UFF SCM	
HPE Dual 240GB SATA 6G RI M.2 to SFF SCM 5300B SSD kit	P19894-K21
HPE Dual 480GB SATA 6G RI M.2 to SFF SCM 5300P SSD kit	P19896-K21
Internal Dual M.2 kit	
HPE Universal SATA 6G AIC HHHL M.2 SSD enablement kit[1]	878783-K21
RI -M.2 -SSDs (2280 type)	
HPE 240GB SATA 6G RI M.2 2280 5300B SSD	P19888-K21
HPE 480GB SATA 6G RI M.2 2280 5300P SSD	P19890-K21
HPE 960GB SATA 6G RI M.2 2280 5300P SSD	P19892-K21
Hard drive blank kits	
HPE Gen9 LFF HDD spade blank kit	807878-B21
HPE SFF hard drive blank kit	666987-B21

Description	Option Part Number

NOTE

1.The Universal SATA M.2 Kit above will require a PCIe slot and support up to two of the same M.2 cards below.

Networking

Description	Option Part Number
100 GbE Adapters	
HPE Ethernet 100Gb 1-port 842Quad Small Form-factor Pluggable (QSFP)28 adapter	874253-B21
25 GbE Adapters	
HPE Ethernet 10/25Gb 2-port 640SFP28 adapter	817753-B21
HPE Ethernet 10/25Gb 2-port 631SFP28 adapter	817718-B21
HPE Ethernet 10/25Gb 2-port 621SFP28 adapter	867328-B21
10 GbE Adapters	
HPE Ethernet 10Gb 2-port 562T adapter	817738-B21
HPE Ethernet 10Gb 2-port 562SFP+ adapter	727055-B21
HPE Ethernet 10Gb 2-port 524SFP+ adapter	P08446-B21
HPE Ethernet 10Gb 2-port 535T adapter	813661-B21
HPE Ethernet 10Gb 2-port 530SFP adapter	652503-B21
HPE Ethernet 10Gb 2-port 530T adapter	656596-B21
HPE Ethernet 10Gb 2-port 521T adapter	867707-B21

Description	Option Part Number
1 GbE Adapters	
HPE Ethernet 1Gb 4-port 366T adapter	811546-B21
HPE Ethernet 1Gb 4-port 331T adapter	647594-B21
HPE Ethernet 1Gb 2-port 361T adapter	652497-B21
HPE Ethernet 1Gb 2-port 332T adapter	615732-B21
Storage Offload Adapters	
HPE NV60100M 100Gb 2-port Storage Offload Adapter	R8M41A

InfiniBand

Description	Option Part Number
HPE InfiniBand HDR/Ethernet 200Gb 1-port 940QSFP56 adapter	P06154-B21
HPE InfiniBand HDR PCIe3 auxiliary card with 350 mm cable kit	P06154-B23
HPE InfiniBand HDR100/Ethernet 100Gb 1-port 940QSFP56 adapter	P06250-B21
HPE InfiniBand HDR100/Ethernet 100Gb 2-port 940QSFP56 adapter	P06251-B21
HPE InfiniBand EDR/Ethernet 100Gb 2-port 841QSFP28 adapter	872726-B21
HPE InfiniBand FDR/Ethernet 10Gb/40Gb 2-port Quad Small Form-factor Pluggable Plus 544 (QSFP+) adapter	764284-B21
HPE InfiniBand EDR 100Gb 1-port 841QSFP28 adapter	872725-B21
HPE InfiniBand EDR/Ethernet 100Gb 1-port 840QSFP28 adapter	825110-B21

Description	Option Part Number
HPE InfiniBand EDR/Ethernet 100Gb 2-port 840QSFP28 adapter	825111-B21
HPE 100Gb 1-port OP101 QSFP28 x16 PCIe Gen3 with Intel Omni-Path architecture adapter	829335-B21

NOTE

Check the below link for more information on HPE InfiniBand options for HPE ProLiant and Apollo servers:

Click here to access the QuickSpecs page for HPE InfiniBand Options for HPE ProLiant and Apollo Servers.

Pensando Distributed Services Platform (DSP)

Description	Option Part Number
Distributed Services Card (DSC)	
Pensando DSP DSC-25 10/25Gb 2-port SFP28 card	P26966-B21
DSP silver software licenses	
Pensando DSP silver 1-year subscription 24x7 support E-RTU	R6A06AAE
Pensando DSP silver 3-year subscription 24x7 support E-RTU	R6A07AAE
Pensando DSP silver 4-year subscription 24x7 support E-RTU	R6F68AAE
Pensando DSP silver 5-year subscription 24x7 support E-RTU	R6A08AAE
DSP platinum software licenses	
Pensando DSP platinum 1-year renewal subscription 24x7 support E-RTU	R6A09AAE

Description	Option Part Number
Pensando DSP platinum 3-year subscription 24x7 support E-RTU	R6A10AAE
Pensando DSP platinum 4-year subscription 24x7 support E-RTU	R6F69AAE
Pensando DSP platinum 5-year subscription 24x7 support E-RTU	R6A11AAE
Policy and Services Manager licenses (PSM)	
Pensando DSP PSM 1-year licenses E-RTU	R6A45AAE
Pensando DSP PSM 3-year licenses E-RTU	R6A46AAE
Pensando DSP PSM 4-year licenses E-RTU	R6F70AAE
Pensando DSP PSM 5-year licenses E-RTU	R6A47AAE

Embedded management

Description	Option Part Number
HPE iLO advanced	
HPE iLO advanced 1-server license with 1-year support on iLO licensed features	512485-B21
HPE iLO advanced flexible quantity license with 1-year support on iLO licensed features	512486-B21
HPE iLO advanced Activation Key Agreement (AKA) tracking license with 1-year support on iLO licensed features	512487-B21
HPE iLO advanced 1-server license with 3-year support on iLO licensed features	BD505A
HPE iLO advanced flexible quantity license with 3-year support on iLO licensed features	BD506A

Description	Option Part Number
HPE iLO advanced AKA tracking license with 3-year support on iLO licensed features	BD507A
HPE iLO advanced electronic license with 1-year support on iLO licensed features	E6U59ABE
HPE iLO advanced electronic license with 3-year support on iLO licensed features	E6U64ABE
HPE iLO common password	
HPE iLO common password FIO setting	P08040-B21

Converged infrastructure management software

Description	Option Part Number
HPE OneView advanced (With HPE iLO advanced)	
HPE OneView including 3-year 24x7 support physical 1-server Licence To Use (LTU)	E5Y34A
HPE OneView including 3-year 24x7 support flexible quantity Electronic License To Use (E-LTU)	E5Y35AAE
HPE OneView advanced (Without HPE iLO advanced)	
HPE OneView without iLO including 3-year 24x7 support 1-server LTU	P8B24A
HPE OneView without iLO including 3-year 24x7 support track 1-server LTU	P8B25A
HPE OneView without iLO including 3-year 24x7 support flexible quantity E-LTU	P8B26AAE
HPE OneView physical media kit LTU	E5Y37A

NOTE

- Licenses ship without media. The HPE OneView media kit can be ordered separately or can be downloaded at:

Description	Option Part Number

Click here to access the page for HPE OneView.

- Electronic and Flexible-Quantity licenses can be used to purchase multiple licenses with a single activation key.

PCIe workload accelerator

Description	Option Part Number
HPE 1.6TB NVMe Gen4 x8 high performance MU AIC HHHL PM1735 SSD	P26934-K21
HPE 3.2TB NVMe Gen4 x8 high performance MU AIC HHHL PM1735 SSD	P26936-K21
HPE 6.4TB NVMe Gen4 x8 high performance MU AIC HHHL PM1735 SSD	P26938-K21
HPE 1.6TB NVMe x8 lanes MU HHHL 3-year warranty DS firmware card	P10264-K21
HPE 6.4TB NVMe x8 lanes MU HHHL 3-year warranty DS firmware card	P10268-K21
HPE 750GB NVMe Gen3 x4 high performance low latency WI AIC HHHL P4800X SSD	878038-K21

NOTE

Check the below link for more information on HPE PCIe Workload accelerators for ProLiant servers:

Click here to access the QuickSpecs page for HPE PCIe Workload Accelerators for ProLiant Servers.

Storage controllers

Description	Option Part Number
HPE Flexible smart array controllers	
HPE Smart array P816i-a SR Gen10 (16 Internal lanes/4GB cache /SmartCache) 12G SAS modular Long Haul (LH) controller	869083-B21
HPE Smart array P408i-a SR Gen10 (8 Internal lanes/2GB cache) 12G SAS modular LH controller	869081-B21
HPE Smart array E208i-a SR Gen10 (8 Internal lanes/no cache) 12G SAS modular LH controller	869079-B21
HPE smart array controllers	
HPE Smart array P408e-p SR Gen10 (8 External lanes/4GB cache) 12G SAS PCIe Plug-In controller	804405-B21
HPE Smart array P408i-p SR Gen10 (8 Internal lanes/2GB cache) 12G SAS PCIe Plug-In controller	830824-B21
HPE Smart array E208e-p SR Gen10 (8 External lanes/no cache) 12G SAS PCIe Plug-In controller	804398-B21
HPE Smart array E208i-p SR Gen10 (8 Internal lanes/no cache) 12G SAS PCIe Plug-In controller	804394-B21
HPE Smart storage battery	
HPE 96 W Smart storage battery (Up to 20 devices) with 260 mm cable kit	P01367-B21
HPE NVMe OS boot device	
HPE NS204i-p x2 lanes NVMe PCIe3 x8 OS boot device	P12965-B21[1]

NOTE

Provides backup power for multiple HPE Smart array controllers or other devices. Is required with performance RAID controllers.

Optional software

Description	Option Part Number
HPE Smart array SR SmartCache (Single key/single server) LTU	D7S26A
HPE Smart array SR SmartCache (Single key/multiple servers) LTU	D7S27A
HPE Smart array SR SmartCache (Single key/multiple servers) E-LTU	D7S27AAE



NOTE

SmartCache is offered on HPE Smart array performance RAID controllers a nd comes standard (No licensing is required) if the HPE Smart array P816i-a SR Gen10 controller is installed in the server.

Storage options

Description	Option Part Number
Emulex fibre channel Host Bus Adapter (HBA)	
HPE StoreFabric SN1200E 16Gb single port fibre channel HBA	Q0L13A
HPE StoreFabric SN1200E 16Gb dual port fibre channel HBA	Q0L14A
HPE StoreFabric SN1600E 32Gb single port fibre channel HBA	Q0L11A
HPE StoreFabric SN1600E 32Gb dual port fibre channel HBA	Q0L12A
HPE SN1610E 32Gb 2-port fibre channel HBA	R2J63A
HPE SN1610E 32Gb 1-port fibre channel HBA	R2J62A
QLogic fibre channel HBAs	
HPE StoreFabric SN1100Q 16Gb single port fibre channel HBA	P9D93A

Description	Option Part Number
HPE StoreFabric SN1100Q 16Gb dual port fibre channel HBA	P9D94A
HPE StoreFabric SN1600Q 32Gb single port fibre channel HBA	P9M75A
HPE StoreFabric SN1600Q 32Gb dual port fibre channel HBA	P9M76A
HPE SN1610Q 32Gb 1-port fibre channel HBA	R2E08A
HPE SN1610Q 32Gb 2-port fibre channel HBA	R2E09A

Rack

Description	Option Part Number
Rail kits	
HPE 2U Gen9 hardware rail kit	822731-B21
Shipping bracket	
HPE Apollo 4200 Gen9 FIO strap shipping bracket	822640-B21
HPE Optical drives	
HPE Mobile USB DVD-RW optical drive	701498-B21

NOTE

This SKU is used for shipping servers that are integrated in a rack.

HPE USB and SD options

Description	Option Part Number
HPE 8GB dual microSD flash USB drive	741279-B21
HPE 32GB microSD flash memory card	700139-B21
HPE 32GB microSD RAID 1 USB boot drive	P21868-B21

OS Compatibility

Feature	Description
OS and virtualization software	• Windows Server 2016 (Most recent version) • VMware ESXi 6.0 U3 • VMware ESXi 6.5 and U2 upon release • VMware ESXi 6.7 and U1 upon release • VMware ESXi 7.0 • Red Hat Enterprise Linux (RHEL) 7.64-bit and 8.64-bit • SUSE Linux Enterprise Server (SLES) 12 64-bit and 15 64-bit • Ubuntu 16.04 and 18.04 • Oracle Linux ver. 7.6 • ClearOS [1,2]

NOTE

1. ClearOS allows user to build a fully functional server that is just right for user at no upfront cost. Check the below link for more information on ClearOS:

   Click here to access the page for ClearOS and ClearVM Software from HPE.

Feature	Description
	2. For more information on HPE Certified and supported ProLiant Servers for OS and virtualization software and latest listing of software drivers available for the server. **Click here to access the webpage for Server OS and virtualization software**.

Software Compatibility

- Active Health System (AHS)
- AHS viewer
- Smart update
- iLO amplifier pack
- HPE iLO mobile application
- RESTful interface tool
- Scripting tools
- HPE OneView standard
- HPE Systems Insight Manager (HPE SIM)

Useful links

Description	Direct links
Alerts	**Click here to view " Advisories, Alerts and Bulletins and Notices of HPE Apollo 4200 Gen10 Server".**
Drivers and Software	**Click here to view "Drivers and software of HPE Apollo 4200 Gen10 Server".**

Knowledge article	**Click here to view" Knowledge articles, Troubleshooting, FAQ, How to , Information document of HPE Apollo 4200 Gen10 Server".**
Manuals	**Click here to view "Manuals, Guides,Release notes, Troubleshooting articles and other related document of HPE Apollo 4200 Gen10 Server".**
Videos	**Click here to access " Videos of Remove/Replace, Setup/Installation, Troubleshooting, Management/Operations of HPE Apollo 4200 Gen10 Server".**