HP ProLiant SL390s G7 4U Half-width Server User Guide

Abstract

This document identifies the components and details the usage of the HP ProLiant SL390s G7 4U Half-width Server. This document is intended for the person who installs, administers, and troubleshoots servers and storage systems. This person should be qualified in the servicing of computer equipment and trained in recognizing hazards in products with hazardous energy levels.



Part Number: 632679-003
April 2013
Edition: 3

© Copyright 2011, 2013 Hewlett-Packard Development Company, L.P.

The information contained herein is subject to change without notice. The only warranties for HP products and services are set forth in the express warranty statements accompanying such products and services. Nothing herein should be construed as constituting an additional warranty. HP shall not be liable for technical or editorial errors or omissions contained herein.

Microsoft® and Windows® are U.S. registered trademarks of Microsoft Corporation.

Contents

Component identification 6
Front panel components 6
Front panel LEDs and buttons 7
Rear panel components 8
Rear panel LEDs and buttons 9
System board components 10
DIMM slots 11
System board switches 11
NMI functionality 12
Hard drive numbering 12
Battery pack LEDs 13
GPU location 15
System fans 16
Operations 17
Power down the server 17
Removing the server from the chassis 17
Setup 19
Optional installation services 19
Rack planning resources 19
Optimum environment 19
Space and airflow requirements 20
Temperature requirements 20
Power requirements 21
Electrical grounding requirements 21
Rack warnings 22
Identifying the contents of the server shipping carton 22
Installing hardware options 22
Installing the server into the chassis 22
Installing the operating system 24
Powering up and configuring the server 24
Registering the server 25
Hardware options installation 26
Introduction 26
Drive options 26
Hard drive guidelines 26
Installing a drive 26
Processor options 27
DIMMs 32
Memory configurations 32
Installing a DIMM 32
Expansion board options 33
Installing a low-profile expansion board 33
PCIe riser board option 35
Cabling 37

SAS or SATA power cabling options 37
Battery cabling for BBWC 37
Configuration and utilities 38
Configuration tools 38
SmartStart software 38
HP ROM-Based Setup Utility 39
Array Configuration Utility 40
Option ROM Configuration for Arrays 41
HP Insight Control server deployment (formerly RDP) 41
Re-entering the server serial number and product ID 42
Management tools 42
Automatic Server Recovery 42
ROMPaq utility 42
Integrated Lights-Out 3 technology 43
Erase Utility 43
HP ProLiant SL Advanced Power Manager 43
Redundant ROM support 44
USB support and functionality 44
Diagnostic tools 45
HP Insight Diagnostics 45
HP Insight Diagnostics survey functionality 45
Integrated Management Log 45
Remote support and analysis tools 46
HP Insight Remote Support software 46
Keeping the system current 46
Drivers 46
ProLiant Support Packs 47
Operating system version support 47
Change control and proactive notification 47
Care Pack 47
Troubleshooting 48
Troubleshooting resources 48
Pre-diagnostic steps 48
Important safety information 48
Symptom information 50
Prepare the server for diagnosis 50
Service notifications 52
Loose connections 52
Server health LEDs 52
Troubleshooting flowcharts 53
Start diagnosis flowchart 53
General diagnosis flowchart 54
Server blade power-on problems flowchart 56
POST problems flowchart 58
OS boot problems flowchart 60
Server fault indications flowchart 62
POST error messages and beep codes 65
System battery 66
Regulatory information 67
Safety and regulatory compliance 67
Turkey RoHS material content declaration 67

Ukraine RoHS material content declaration 67
Warranty information 67
Electrostatic discharge 68
Preventing electrostatic discharge 68
Grounding methods to prevent electrostatic discharge 68
Specifications 69
Environmental specifications 69
Server specifications 69
Support and other resources 70
Before you contact HP 70
HP contact information 70
Customer Self Repair 70
Acronyms and abbreviations 78
Documentation feedback 82
Index 83

Component identification

Front panel components

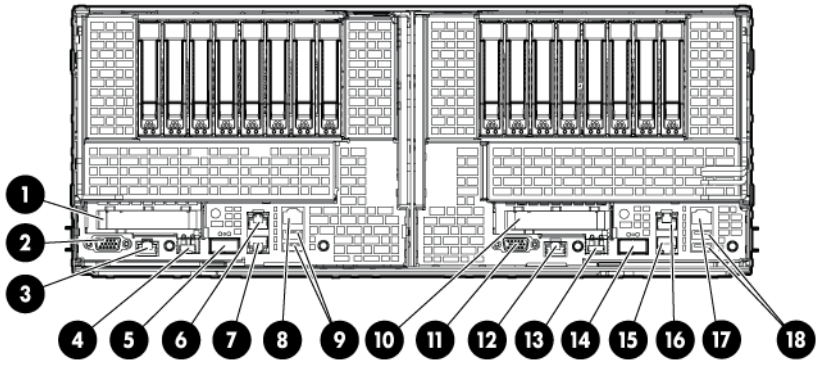

NOTE: This figure illustrates the left and right system trays.

Item	Description
1	Front PCIe bracket (LP slot)
2	VGA port
3	Serial port (RJ45 style)
4	SFP+/10 GigE port*
5	QSFP/InfiniBand port*
6	NIC 1 network port /iLO 3 sideband port
7	NIC 2 network port
8	iLO 3 network port
9	USB connectors
10	Front PCIe bracket (LP slot)
11	VGA port
12	Serial port (RJ45 style)
13	SFP+/10 GigE port*
14	QSFP/InfiniBand port*
15	NIC 1 network port /iLO 3 sideband port
16	NIC 2 network port
17	iLO 3 network port
18	USB connectors

*By default, the HP NC543i 2-port 4x QDR IB/10Gb Adapter is configured as a dual-port 10 GigE device. If the InfiniBand Enablement kit is installed, then the onboard QSFP port functions as InfiniBand, and the device operates as a 1-port 10 GigE (SFP+) and 1-port QDR InfiniBand (QSFP).

Front panel LEDs and buttons

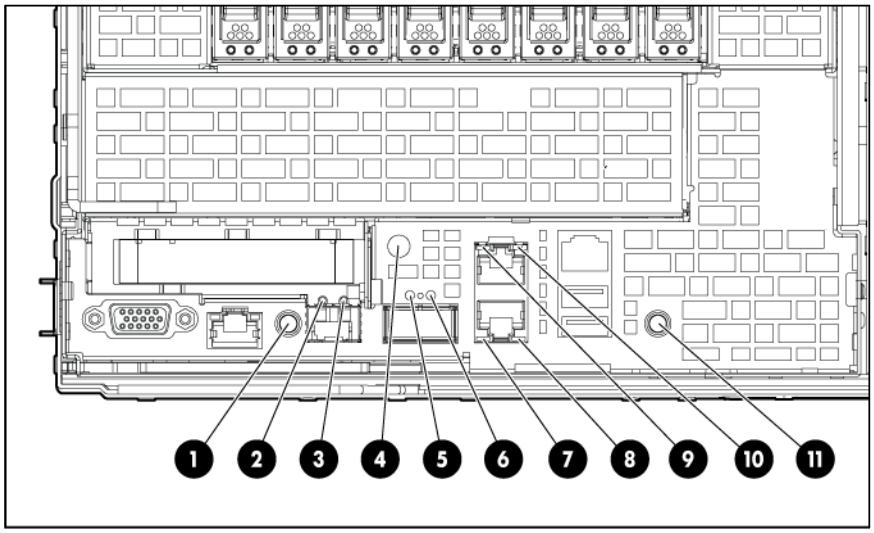

Item	Description	Status
1	Power On/Standby button and system power LED	Green—System on Amber—System shut down, but power still applied. Off—Power cord is not attached, or power supply has failed.
2	SFP+/10 GigE activity LED	Flashing green—Activity exists Off—No activity exists, or no connection exists.
3	SFP+/10 GigE link LED	Green—Linking Off—No connection exists.
4	Health LED	Green—Normal Flashing amber—System degraded Flashing red—System critical
5	QSFP/InfiniBand activity LED	Amber—Logical link established Flashing amber—Activity exists. Off—No activity exists, or no connection exists.
6	QSFP/InfiniBand port link LED	Green—Physical link negotiated. Off—No connection exists.
7	NIC 2 speed LED	Green—LAN connection using a GbE link Amber—LAN connection using a 10 Mbps/100 Mbps link Off—No LAN connection exists.
8	NIC 2 activity LED	Flashing green—Network data activity exists. Off—No network data activity exists, or no network connection exists.
9	NIC 1/iLO 3 activity LED	Flashing green—Network data activity exists. Off—No network data activity exists, or no network connection exists.
10	NIC 1/iLO 3 speed LED	Green—LAN connection using a GbE link Amber—LAN connection using a 10 Mbps/100 Mbps link

Item	Description	Status
		Off—No LAN connection exists.
11	UID LED button	Blue—Activated Flashing blue—System is being remotely managed. Off—Deactivated

* A subnet manager is required to manage and control an InfiniBand fabric. The amber LED indicates if the InfiniBand port has been configured by an Active Subnet manager.

Rear panel components

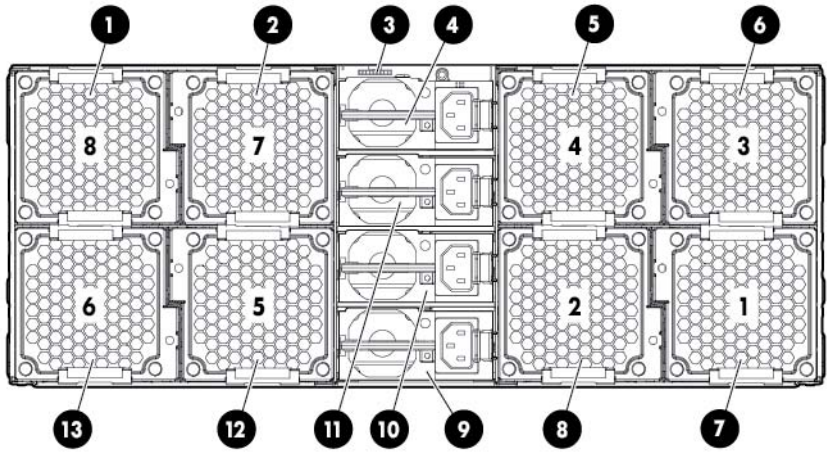

Item	Description
1	Fan 8
2	Fan 7
3	SLAPM interface
4	Power supply 4
5	Fan 4
6	Fan 3
7	Fan 1
8	Fan 2
9	Power supply 1
10	Power supply 2
11	Power supply 3
12	Fan 5
13	Fan 6

Rear panel LEDs and buttons

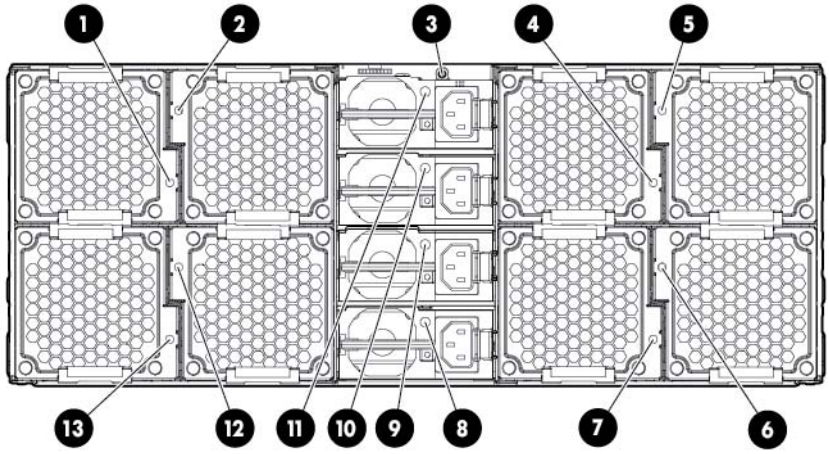

Item	Description	Status
1	Fan 8 power LED	Off—Normal Amber—Fan has failed.
2	Fan 7 power LED	Off—Normal Amber—Fan has failed.
3	UID LED button	Blue—Activated Flashing blue—System is being remotely managed. Off—Deactivated
4	Fan 4 power LED	Off—Normal Amber—Fan has failed.
5	Fan 3 power LED	Off—Normal Amber—Fan has failed.
6	Fan 1 power LED	Off—Normal Amber—Fan has failed.
7	Fan 2 power LED	Off—Normal Amber—Fan has failed.
8	Power supply 1 power LED	Green—Normal Off—No AC power Amber—Power supply has failed.
9	Power supply 2 power LED	Green—Normal Off—No AC power Amber—Power supply has failed.
10	Power supply 3 power LED	Green—Normal Off—No AC power Amber—Power supply has failed.
11	Power supply 4 power LED	Green—Normal Off—No AC power Amber—Power supply has failed.
12	Fan 5 power LED	Off—Normal Amber—Fan has failed.
13	Fan 6 power LED	Off—Normal Amber—Fan has failed.

System board components

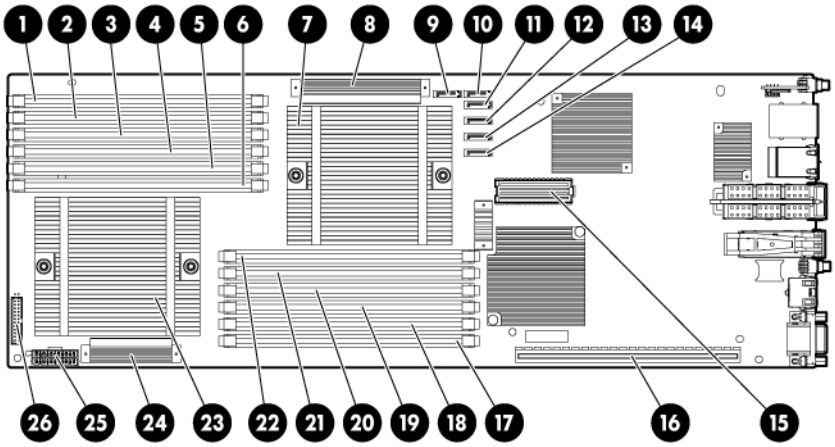

Item	Designator	Description
1	J1	CPU 1 DIMM slot 6A
2	J2	CPU 1 DIMM slot 5D
3	J4	CPU 1 DIMM slot 4B
4	J5	CPU 1 DIMM slot 3E
5	J7	CPU 1 DIMM slot 2C
6	J8	CPU 1 DIMM slot 1F
7	XU2	CPU 2 socket
8	U10 U22 U41 U51 U12 U10 U14 U11	CPU2 VRD and CPU1 DIMM VRD
9	J25	SATA 6 Connector
10	J22	SATA 5 Connector
11	J32	SATA 1 Connector
12	J9	SATA 2 Connector
13	J18	SATA 3 Connector
14	J19	SATA 4 Connector
15	J56	QPI connector
16	J24	Riser connector
17	J10	CPU2 DIMM slot 6A
18	J11	CPU2 DIMM slot 5D
19	J13	CPU2 DIMM slot 4B
20	J14	CPU2 DIMM slot 3E
21	J16	CPU2 DIMM slot 2C

Item	Designator	Description
22	J17	CPU2 DIMM slot 1F
23	XU1	CPU 1 socket
24	U24 U5 U4 U30 U27	CPU1 VRD
25	J36	Power connector
26	J42	RPS connector

DIMM slots

DIMM slots are identified by the numbers 1 through 6. DIMM population order is specified by the letters A through F.

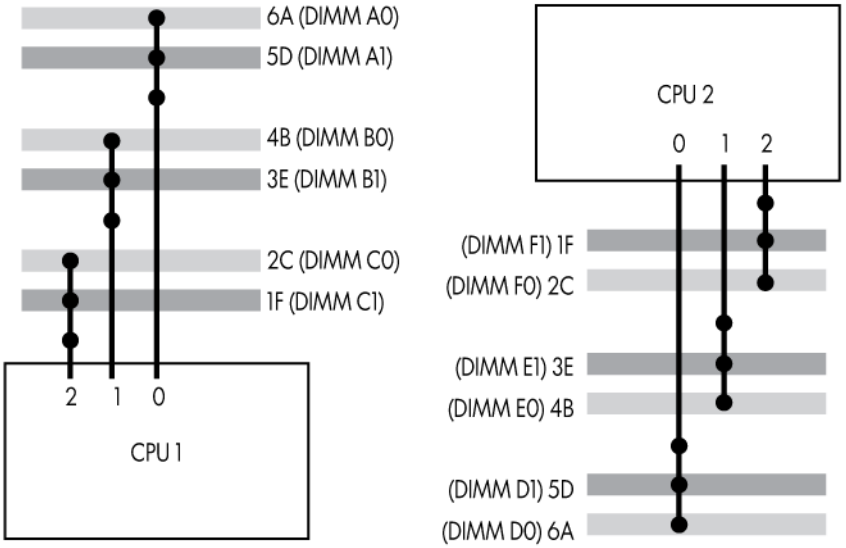

System board switches

System maintenance switch

Position	Default	Function
S1	Off	Off—iLO 3 security is enabled. On—iLO 3 security is disabled.
S2	Off	Off—System configuration can be changed. On—System configuration is locked.
S3	Off	Reserved
S4	Off	Reserved
S5	Off	Off—Power-on password enabled. On—Power-on password disabled.
S6	Off	Off—No function On—ROM reads system configuration as invalid.

When the system maintenance switch position 6 is set to the On position, the system is prepared to erase all system configuration settings from both CMOS and NVRAM.

△ **CAUTION:** Clearing CMOS and/or NVRAM deletes configuration information. There is an RBSU setting that erases default settings and fixed disk partitions, which causes a loss of data.

Diagnostic LEDs

Position	Position	Function
S7	S8	Diagnostic LEDs
Off	Off	Port 85
Off	On	Port 84
On	Off	iLO 3

NMI functionality

An NMI crash dump creates a crash dump log before resetting a system which is not responding.

Crash dump log analysis is an essential part of diagnosing reliability problems, such as failures of operating systems, device drivers, and applications. Many crashes freeze a system, and the only available action for administrators is to restart the system. Resetting the system erases any information which could support problem analysis, but the NMI feature preserves that information by performing a memory dump before a system reset.

To force the system to invoke the NMI handler and generate a crash dump log, do one of the following:

- Use the iLO Virtual NMI feature.
- Short the NMI header.

For more information, see the HP website (http://h20000.www2.hp.com/bc/docs/support/SupportManual/c00797875/c00797875.pdf).

Hard drive numbering

The following figure illustrates the location of hard drives on the front of the system tray.

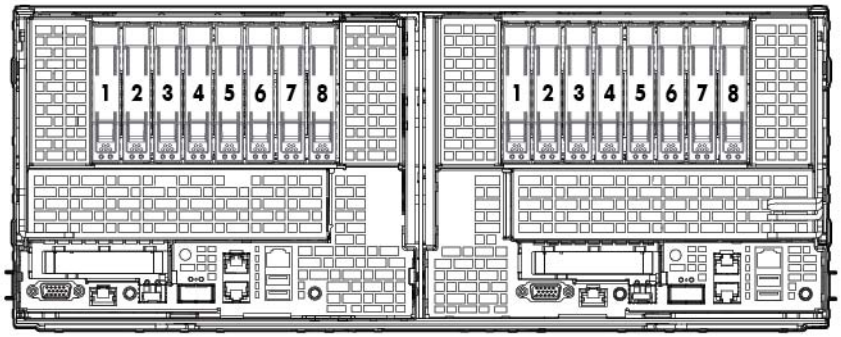

Item	Description
1	SAS/SATA hard drive 1

Item	Description
2	SAS/SATA hard drive 2
3	SAS/SATA hard drive 3
4	SAS/SATA hard drive 4
5	SAS/SATA hard drive 5
6	SAS/SATA hard drive 6
7	SAS/SATA hard drive 7
8	SAS/SATA hard drive 8

Battery pack LEDs

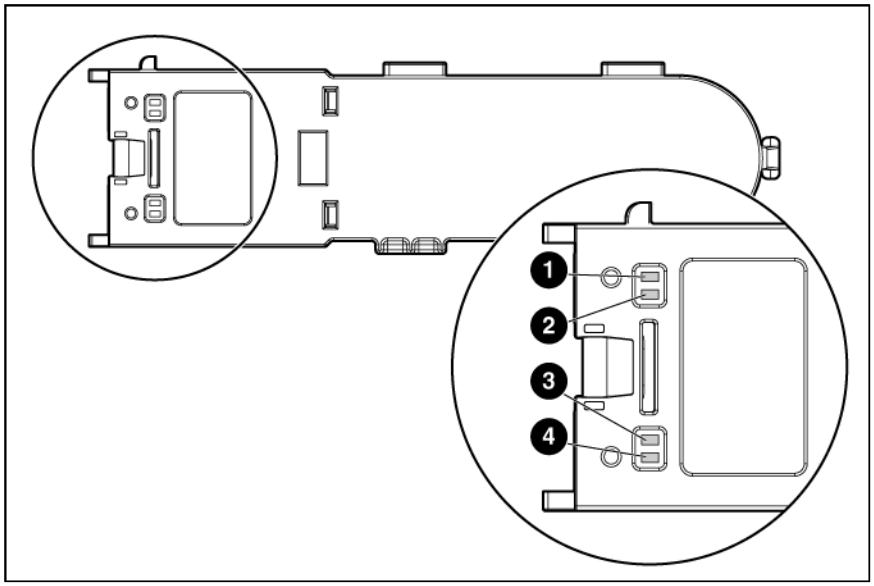

Item	Color	Description
1	Green	System Power LED. This LED is on when the system is powered up and 12 V system power is available. This power supply is used to maintain the battery charge and provide supplementary power to the cache microcontroller.
2	Green	Auxiliary Power LED. This LED is on when 3.3V auxiliary voltage is detected. The auxiliary voltage is used to preserve BBWC data and is available any time that the system power cords are connected to a power supply.
3	Amber	Battery Health LED. To interpret the illumination patterns of this LED, see the following table.
4	Green	BBWC Status LED. To interpret the illumination patterns of this LED, see the following table.

LED3 pattern	LED4 pattern	Interpretation
Off	Flashing (2 Hz)	The system is powered down, and the cache contains data that has not yet been written to the drives. Restore system power as soon as possible to prevent data loss. Data preservation time is extended any time that 3.3 V auxiliary power is available, as indicated by LED 2. In the absence of auxiliary power, battery power alone preserves the data. A fully-charged battery can normally preserve data for at least 2 days. The battery lifetime also depends on the cache module size. For more information, see the controller QuickSpecs on the HP website (http://www.hp.com).
Off	Double flash, then pause	The cache microcontroller is waiting for the host controller to communicate.
Off	Flashing (1 Hz)	The battery pack is below the minimum charge level and is being charged. Features that require a battery (such as write cache, capacity expansion, stripe size migration, and RAID migration) are unavailable temporarily until charging is complete. The recharge process takes between 15 minutes and 2 hours, depending on the initial capacity of the battery.
Off	On	The battery pack is fully charged, and posted write data is stored in the cache.
Off	Off	The battery pack is fully charged, and no posted write data exists in the cache.
Flashing (1 Hz)	Flashing (1 Hz)	An alternating green and amber flashing pattern indicates that the cache microcontroller is executing from within its boot loader and receiving new flash code from the host controller.
On	—	A short circuit exists across the battery terminals or within the battery pack. BBWC features are disabled until the battery pack is replaced. The life expectancy of a battery pack is typically more than 3 years.
Flashing (1 Hz)	—	An open circuit exists across the battery terminals or within the battery pack. BBWC features are disabled until the battery pack is replaced. The life expectancy of a battery pack is typically more than 3 years.

GPU location

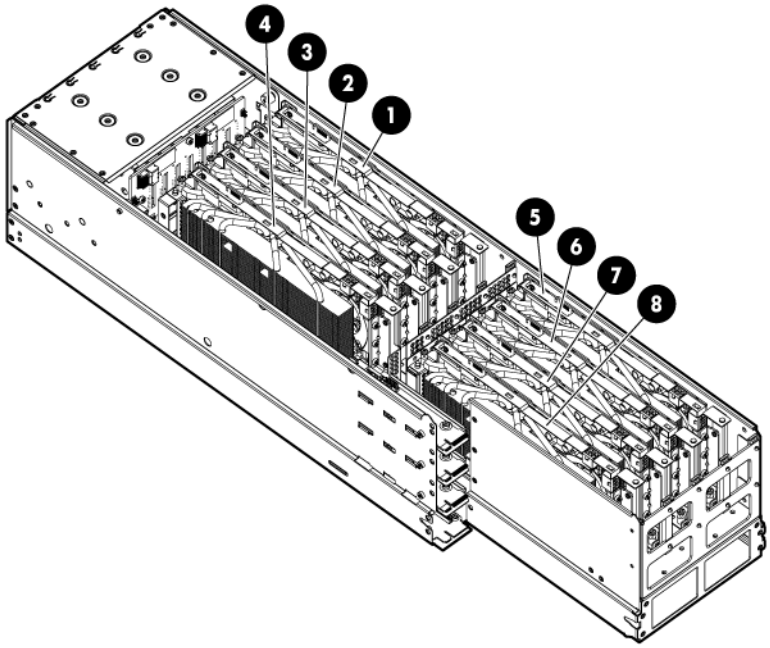

Item	Description
1	GPU 1
2	GPU 2
3	GPU 3
4	GPU 4
5	GPU 5
6	GPU 6
7	GPU 7
8	GPU 8

System fans

The server has eight system fans located on the rear panel of the chassis.

The following figure identifies the system fans by device number.

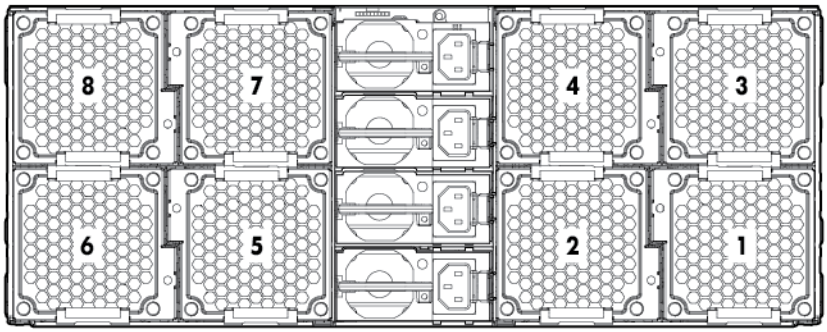

CAUTION: To prevent damage to the server, do not install a combination of redundant and non-redundant fans.

Operations

Power down the server

WARNING: To reduce the risk of personal injury, electric shock, or damage to the equipment, remove the power cord to remove power from the server. The front panel Power On/Standby button does not completely shut off system power. Portions of the power supply and some internal circuitry remain active until AC power is removed.

IMPORTANT: If installing a hot-plug device, it is not necessary to power down the server.

1. Back up the server data.
2. Shut down the operating system as directed by the operating system documentation.

   NOTE: If the operating system automatically places the server in Standby mode, omit the next step.

3. Press the Power On/Standby button to place the server in Standby mode. When the server activates Standby power mode, the system power LED changes to amber.

   IMPORTANT: Pressing the UID button illuminates the blue UID LEDs on the front and rear panels. In a rack environment, this feature facilitates locating a server when moving between the front and rear of the rack.

4. Disconnect the power cords.

The system is now without power.

Removing the server from the chassis

1. Press the latch to release the handle.
2. Rotate the handle to disengage the power connector.
3. Extend the server from the chassis until the release latch catches.
4. While firmly holding the server, press the release button.

5. Remove the server from chassis.

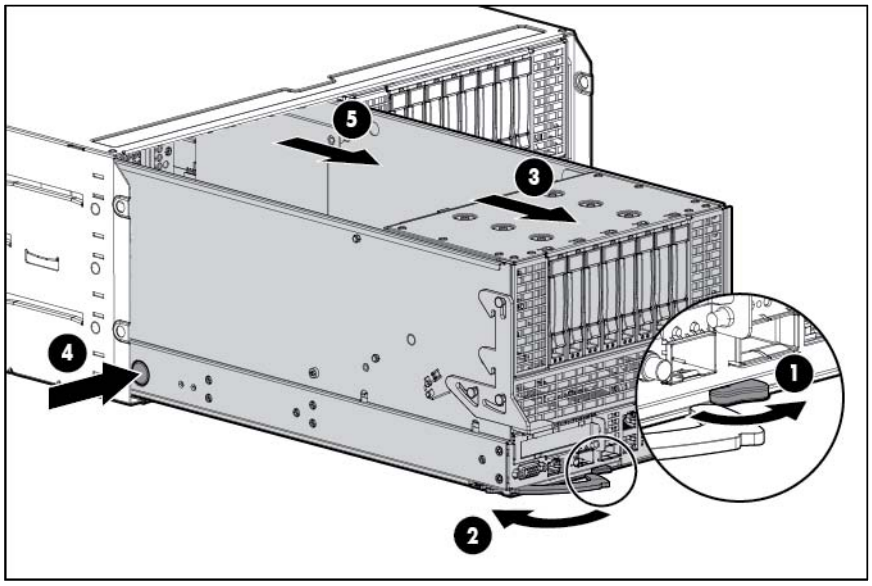

6. Repeat the previous steps to remove the right server from the chassis.

Setup

Optional installation services

Delivered by experienced, certified engineers, HP Care Pack services help you keep your servers up and running with support packages tailored specifically for HP ProLiant systems. HP Care Packs let you integrate both hardware and software support into a single package. A number of service level options are available to meet your needs.

HP Care Pack Services offer upgraded service levels to expand the standard product warranty with easy-to-buy, easy-to-use support packages that help you make the most of your server investments. Some of the Care Pack services are:

- Hardware support
  - 6-hour call-to-repair
  - 4-hour 24x7 same day
  - 4-hour same business day
- Software support
  - Microsoft®
  - Linux
- Integrated hardware and software support
  - Critical Service
  - Proactive 24
  - Support Plus
  - Support Plus 24
- Startup and implementation services for both hardware and software

For more information on Care Packs, see the HP website (http://www.hp.com/hps/carepack).

Rack planning resources

The rack resource kit ships with all HP branded or Compaq branded 9000, 10000, and H9 series racks. For more information on the content of each resource, see the rack resource kit documentation.

Optimum environment

When installing the server in a rack, select a location that meets the environmental standards described in this section.

Space and airflow requirements

To allow for servicing and adequate airflow, observe the following space and airflow requirements when deciding where to install a rack:

- Leave a minimum clearance of 63.5 cm (25 in) in front of the rack.
- Leave a minimum clearance of 76.2 cm (30 in) behind the rack.
- Leave a minimum clearance of 121.9 cm (48 in) from the back of the rack to the back of another rack or row of racks.

HP servers draw in cool air through the front door and expel warm air through the rear door. Therefore, the front and rear rack doors must be adequately ventilated to allow ambient room air to enter the cabinet, and the rear door must be adequately ventilated to allow the warm air to escape from the cabinet.

CAUTION: To prevent improper cooling and damage to the equipment, do not block the ventilation openings.

When vertical space in the rack is not filled by a server or rack component, the gaps between the components cause changes in airflow through the rack and across the servers. Cover all gaps with blanking panels to maintain proper airflow.

CAUTION: Always use blanking panels to fill empty vertical spaces in the rack. This arrangement ensures proper airflow. Using a rack without blanking panels results in improper cooling that can lead to thermal damage.

The 9000 and 10000 Series Racks provide proper server cooling from flow-through perforations in the front and rear doors that provide 64 percent open area for ventilation.

CAUTION: When using a Compaq branded 7000 series rack, install the high airflow rack door insert (PN 327281-B21 for 42U rack, PN 157847-B21 for 22U rack) to provide proper front-to-back airflow and cooling.

CAUTION: If a third-party rack is used, observe the following additional requirements to ensure adequate airflow and to prevent damage to the equipment:

- Front and rear doors—If the 42U rack includes closing front and rear doors, you must allow 5,350 sq cm (830 sq in) of holes evenly distributed from top to bottom to permit adequate airflow (equivalent to the required 64 percent open area for ventilation).
- Side—The clearance between the installed rack component and the side panels of the rack must be a minimum of 7 cm (2.75 in).

IMPORTANT: The HP ProLiant SL390s G7 4U Half-width Server cable management arm is not supported on Compaq branded 7000 series racks.

Temperature requirements

To ensure continued safe and reliable equipment operation, install or position the system in a well-ventilated, climate-controlled environment.

The maximum recommended ambient operating temperature (TMRA) for most server products is 35°C (95°F). The temperature in the room where the rack is located must not exceed 35°C (95°F).

CAUTION: To reduce the risk of damage to the equipment when installing third-party options:

- Do not permit optional equipment to impede airflow around the server or to increase the internal rack temperature beyond the maximum allowable limits.
- Do not exceed the manufacturer's TMRA.

Power requirements

Installation of this equipment must comply with local and regional electrical regulations governing the installation of information technology equipment by licensed electricians. This equipment is designed to operate in installations covered by NFPA 70, 1999 Edition (National Electric Code) and NFPA-75, 1992 (code for Protection of Electronic Computer/Data Processing Equipment). For electrical power ratings on options, refer to the product rating label or the user documentation supplied with that option.

WARNING: To reduce the risk of personal injury, fire, or damage to the equipment, do not overload the AC supply branch circuit that provides power to the rack. Consult the electrical authority having jurisdiction over wiring and installation requirements of your facility.

CAUTION: Protect the server from power fluctuations and temporary interruptions with a regulating uninterruptible power supply. This device protects the hardware from damage caused by power surges and voltage spikes and keeps the system in operation during a power failure.

When installing more than one server, you may need to use additional power distribution devices to safely provide power to all devices. Observe the following guidelines:

- Balance the server power load between available AC supply branch circuits.
- Do not allow the overall system AC current load to exceed 80% of the branch circuit AC current rating.
- Do not use common power outlet strips for this equipment.
- Provide a separate electrical circuit for the server.

Electrical grounding requirements

The server must be grounded properly for proper operation and safety. In the United States, you must install the equipment in accordance with NFPA 70, 1999 Edition (National Electric Code), Article 250, as well as any local and regional building codes. In Canada, you must install the equipment in accordance with Canadian Standards Association, CSA C22.1, Canadian Electrical Code. In all other countries, you must install the equipment in accordance with any regional or national electrical wiring codes, such as the International Electrotechnical Commission (IEC) Code 364, parts 1 through 7. Furthermore, you must be sure that all power distribution devices used in the installation, such as branch wiring and receptacles, are listed or certified grounding-type devices.

Because of the high ground-leakage currents associated with multiple servers connected to the same power source, HP recommends the use of a PDU that is either permanently wired to the building's branch circuit or includes a nondetachable cord that is wired to an industrial-style plug. NEMA locking-style plugs or those complying with IEC 60309 are considered suitable for this purpose. Using common power outlet strips for the server is not recommended.

Rack warnings

⚠ **WARNING:** To reduce the risk of personal injury or damage to the equipment, be sure that:

- The leveling jacks are extended to the floor.
- The full weight of the rack rests on the leveling jacks.
- The stabilizing feet are attached to the rack if it is a single-rack installation.
- The racks are coupled together in multiple-rack installations.
- Only one component is extended at a time. A rack may become unstable if more than one component is extended for any reason.

⚠ **WARNING:** To reduce the risk of personal injury or equipment damage when unloading a rack:

- At least two people are needed to safely unload the rack from the pallet. An empty 42U rack can weigh as much as 115 kg (253 lb), can stand more than 2.1 m (7 ft) tall, and might become unstable when being moved on its casters.
- Never stand in front of the rack when it is rolling down the ramp from the pallet. Always handle the rack from both sides.

Identifying the contents of the server shipping carton

Unpack the server shipping carton and locate the materials and documentation necessary for installing the server. All the rack mounting hardware necessary for installing the server into the rack is included with the rack or the server.

The contents of the server shipping carton include:

- Server
- Power cord
- Hardware documentation, Documentation CD, and software products
- Rack-mounting hardware

In addition to the supplied items, you might need:

- Operating system or application software
- Hardware options

Installing hardware options

Install any hardware options before initializing the server. For options installation information, refer to the option documentation. For server-specific information, refer to "Hardware options installation (on page 26)."

Installing the server into the chassis

1. Insert the system tray into the chassis.

2. Rotate the tray handle to lock.

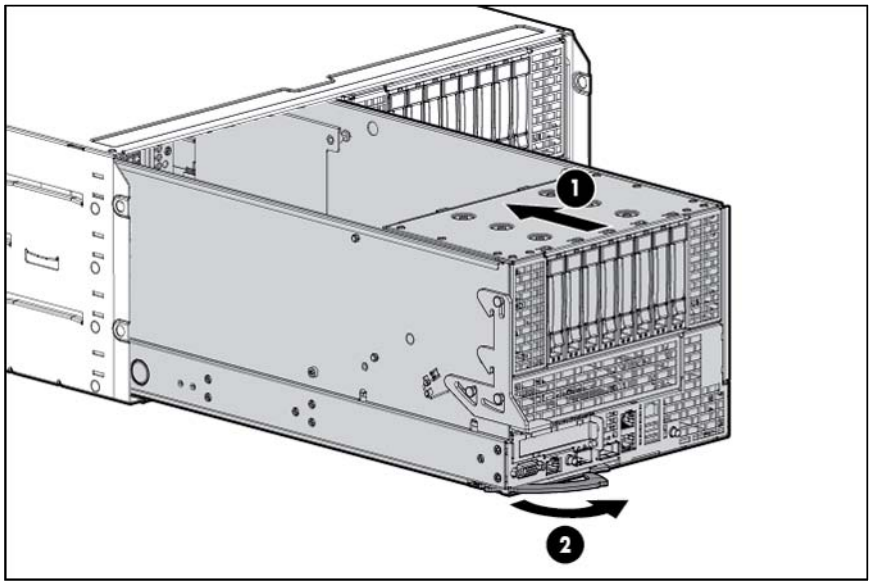

3. Connect peripheral devices to the server.

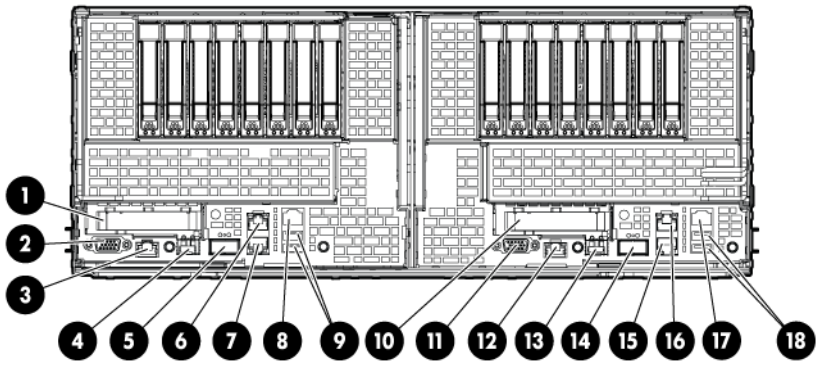

NOTE: This figure illustrates the left and right system trays.

Item	Description
1	Front PCIe bracket (LP slot)
2	VGA port
3	Serial port (RJ45 style)
4	SFP+/10 GigE port*
5	QSFP/InfiniBand port*
6	NIC 1 network port /iLO 3 sideband port
7	NIC 2 network port
8	iLO 3 network port
9	USB connectors
10	Front PCIe bracket (LP slot)

Item	Description
11	VGA port
12	Serial port (RJ45 style)
13	SFP+/10 GigE port*
14	QSFP/InfiniBand port*
15	NIC 1 network port /iLO 3 sideband port
16	NIC 2 network port
17	iLO 3 network port
18	USB connectors

*By default, the HP NC543i 2-port 4x QDR IB/10Gb Adapter is configured as a dual-port 10 GigE device. If the InfiniBand Enablement kit is installed, then the onboard QSFP port functions as InfiniBand, and the device operates as a 1-port 10 GigE (SFP+) and 1-port QDR InfiniBand (QSFP).

⚠ **WARNING:** To reduce the risk of electric shock, fire, or damage to the equipment, do not plug telephone or telecommunications connectors into RJ-45 connectors.

4. Connect the power cords to the power supplies.
5. Connect the power cord to the AC power source.

⚠ **WARNING:** To reduce the risk of electric shock or damage to the equipment:

- Do not disable the power cord grounding plug. The grounding plug is an important safety feature.
- Plug the power cord into a grounded (earthed) electrical outlet that is easily accessible at all times.
- Unplug the power cord from the power supply to disconnect power to the equipment.
- Do not route the power cord where it can be walked on or pinched by items placed against it. Pay particular attention to the plug, electrical outlet, and the point where the cord extends from the server.

Installing the operating system

To operate properly, the server must have a supported operating system installed. For the latest information on supported operating systems, refer to the HP website (http://www.hp.com/go/supportos).

Methods to install an operating system on the server include:

- SmartStart assisted installation—Insert the SmartStart CD into the CD-ROM drive and reboot the server.
- Manual installation—Insert the operating system CD into the CD-ROM drive and reboot the server. This process may require you to obtain additional drivers from the HP website (http://www.hp.com/support).

For information on using these installation paths, refer to the SmartStart installation poster in the HP ProLiant Essentials Foundation Pack, included with the server.

Powering up and configuring the server

To power up the server, press the Power On/Standby button.

While the server boots, RBSU and the ORCA utility are automatically configured to prepare the server for operating system installation.

To configure these utilities manually:

- Press the **F8** key when prompted during the array controller initialization to configure the array controller using ORCA.
- Press the **F9** key when prompted during the boot process to change the server settings using RBSU. The system is set up by default for the English language.

For more information on the automatic configuration, refer to the *HP ROM-Based Setup Utility User Guide* located on the Documentation CD.

Registering the server

To experience quicker service and more efficient support, register the product at the HP Product Registration website (http://register.hp.com).

Hardware options installation

Introduction

If more than one option is being installed, read the installation instructions for all the hardware options and identify similar steps to streamline the installation process.

WARNING: To reduce the risk of personal injury from hot surfaces, allow the drives and the internal system components to cool before touching them.

CAUTION: To prevent damage to electrical components, properly ground the server before beginning any installation procedure. Improper grounding can cause electrostatic discharge.

Drive options

Hard drive guidelines

When adding hard drives to the server, observe the following general guidelines:

- The system automatically sets all drive numbers.
- If only one hard drive is used, install it in the bay with the lowest drive number.
- Drives must be the same capacity to provide the greatest storage space efficiency when drives are grouped together into the same drive array.

Optional storage controllers provide support for hot-plug capability and drive LEDs. Controller options are:

- The embedded controller supports non-hot-plug SATA drives. Drive LEDs are not supported.
- Optional SATA controllers support hot-plug SATA drives and drive LEDs.
- Optional SAS controllers support hot-plug SAS or SATA drives and drive LEDs.

Installing a drive

The server can accommodate to eight SFF drives or SSDs. The server supports SAS/SATA drives and SSDs.

To install the component:

1. Power down the server (on page 17).
2. Disconnect all peripheral cables from the server.
3. Remove the server from the chassis ("Removing the server from the chassis" on page 17).
4. Rotate the drive carrier handle up.
5. Insert the drive carrier, and align the pins.

6. Rotate the drive carrier handle down.

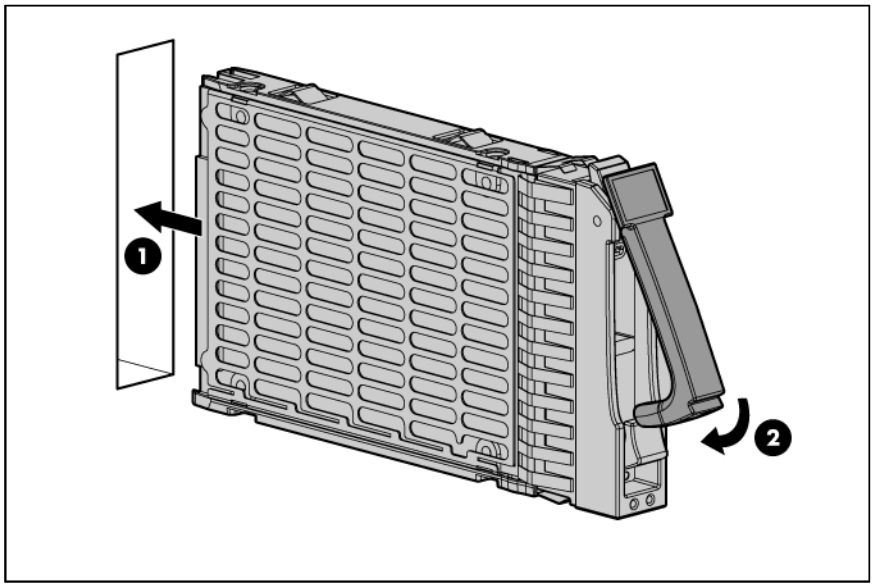

7. Install the server into the chassis ("Installing the server into the chassis" on page 22).
8. Connect the peripheral devices to the server.
9. Power up the server ("Powering up and configuring the server" on page 24).

Processor options

WARNING: To reduce the risk of personal injury from hot surfaces, allow the drives and the internal system components to cool before touching them.

CAUTION: To prevent possible server malfunction and damage to the equipment, multiprocessor configurations must contain processors with the same part number.

CAUTION: To prevent possible server overheating, always populate processor socket 2 with a processor and a heatsink or a processor socket cover and a heatsink blank.

IMPORTANT: Processor socket 1 must be populated at all times or the server does not function.

To install the component:

1. Power down the server (on page 17).
2. Disconnect all peripheral cables from the server.
3. Remove the server from the chassis ("Removing the server from the chassis" on page 17).

CAUTION: Failure to completely open the processor locking lever prevents the processor from seating during installation, leading to hardware damage.

4. Open the processor locking lever and the processor socket retaining bracket. **Do not remove the processor socket cover**.

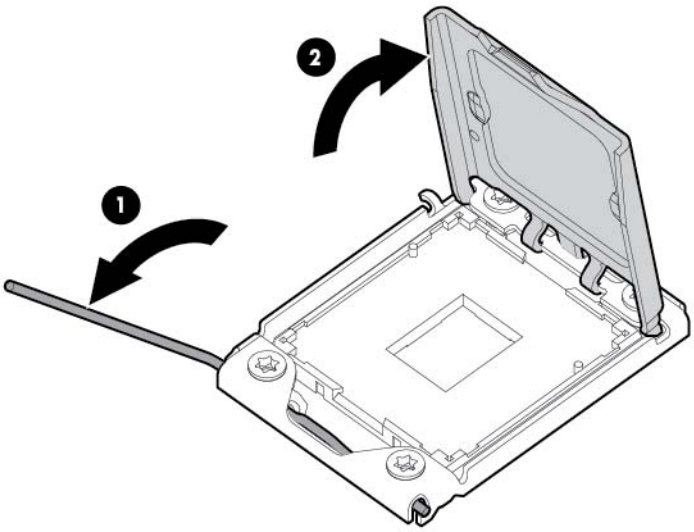

IMPORTANT: Be sure the processor remains inside the processor installation tool.

5. If the processor has separated from the installation tool, carefully re-insert the processor in the tool. Handle the processor by the edges only, and do not touch the bottom of the processor, especially the contact area.

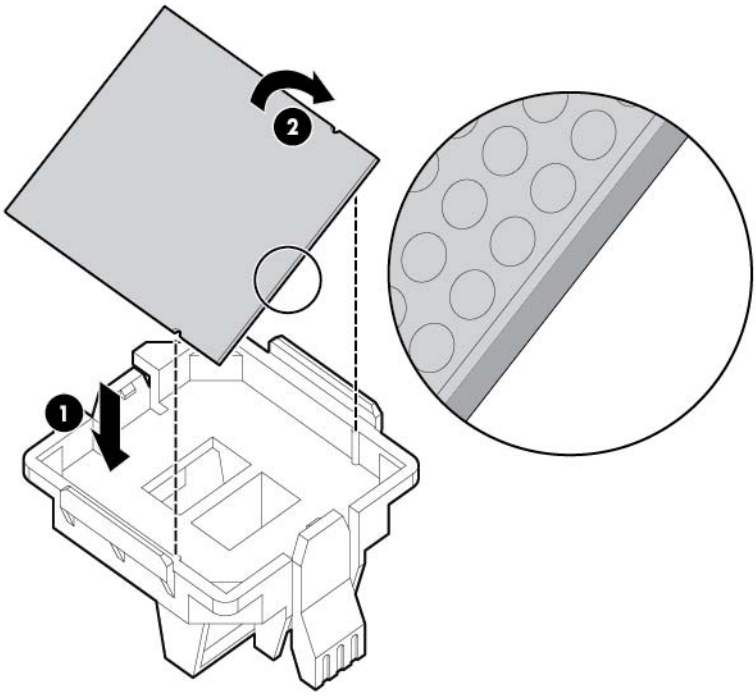

6. Align the processor installation tool with the socket, and then install the processor. **THE PINS ON THE SYSTEM BOARD ARE VERY FRAGILE AND EASILY DAMAGED**.

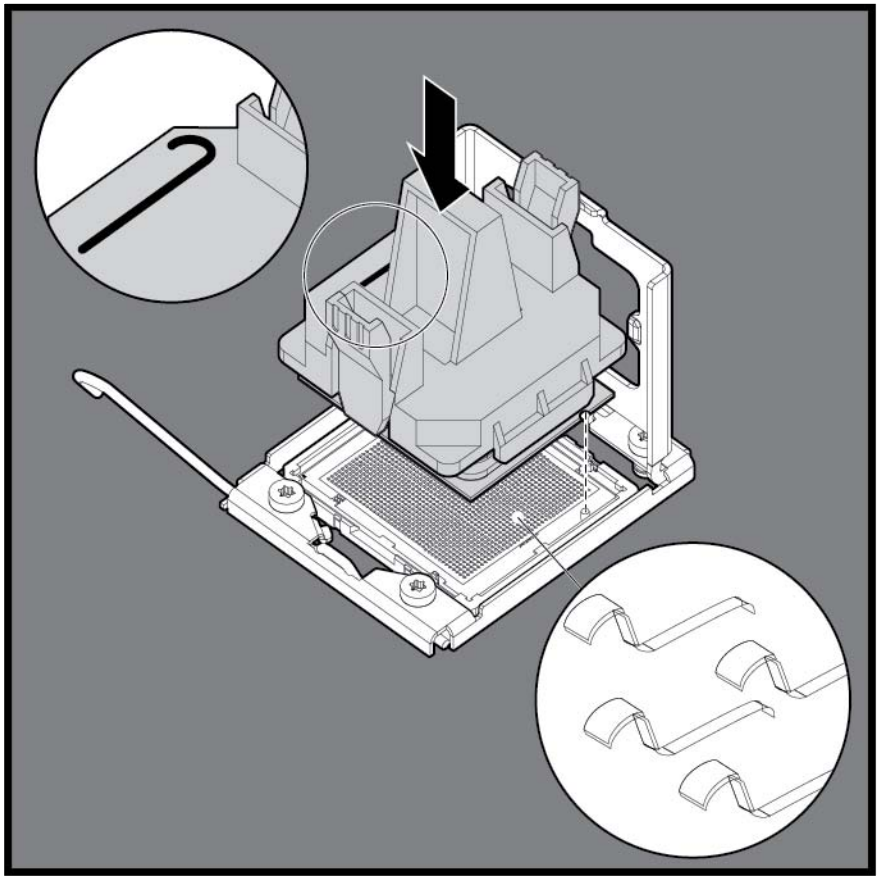

△ **CAUTION: THE PINS ON THE SYSTEM BOARD ARE VERY FRAGILE AND EASILY DAMAGED.** To avoid damage to the system board:

- Never install or remove a processor without using the processor installation tool.
- Do not touch the processor socket contacts.
- Do not tilt or slide the processor when lowering the processor into the socket.

7. Press the tabs on the processor installation tool to separate it from the processor, and then remove the tool.

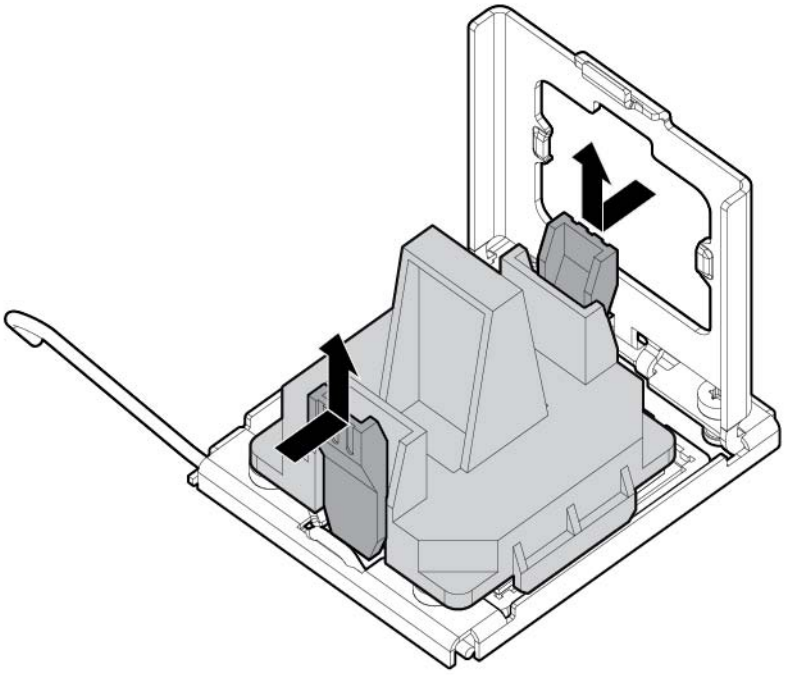

8. Close the processor socket retaining bracket and the processor locking lever. **The processor socket cover is automatically ejected**. Remove the cover.

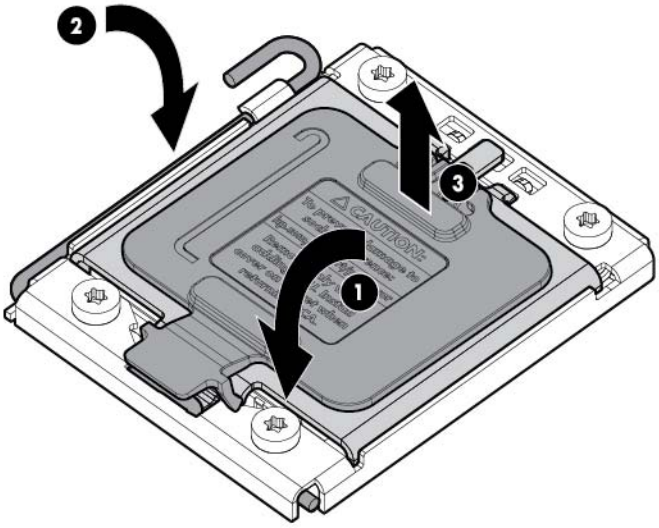

△ **CAUTION:** Be sure to close the processor socket retaining bracket before closing the processor locking lever. The lever should close without resistance. Forcing the lever closed can damage the processor and socket, requiring system board replacement.

9. Remove the heatsink protective cover.

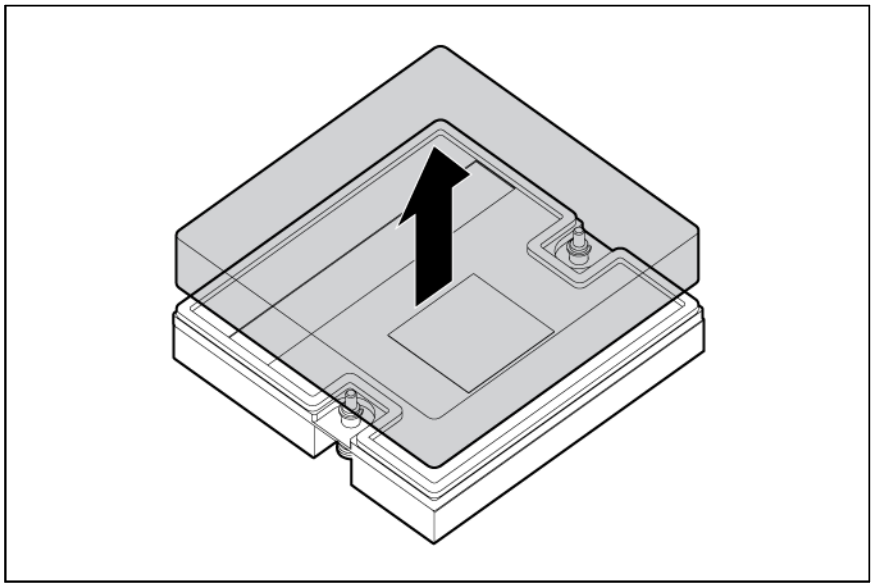

△ **CAUTION:** Heatsink screws should be tightened and loosened in alternating sequence. Do not overtighten the screws as this can damage the system board, connectors, or screws. When using a torque wrench, tighten the screws to 0.68 to 0.90 Nm (6 to 8 in-lb.) of torque.

10. Install the heatsink:
    a. Position the heatsink on the processor backplate.
    b. Tighten the first screw about three quarters in, and then tighten the second screw completely.
    c. Completely tighten the first screw.

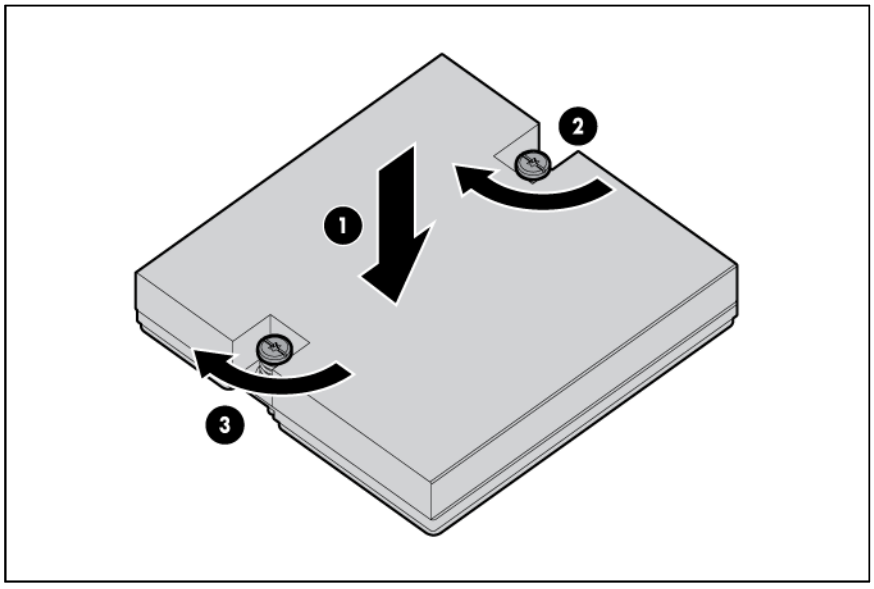

11. Install the server into the chassis ("Installing the server into the chassis" on page 22).
12. Connect the peripheral devices to the server.
13. Power up the server ("Powering up and configuring the server" on page 24).

DIMMs

Memory configurations

The server has 12 DIMM slots that support up to 96 GB maximum system memory. If you add or replace memory modules, follow these guidelines:

- You can install a maximum of 12 DDR3 240-pin RDIMMs (SR, DR, QR) or UDIMMs (SR, DR) slots (6 DIMMs per CPU).
- Channel 0 is located farthest from the processor, followed by channel 1, and then channel 2.
- Of the two DIMMs in a given channel, DIMM 0 is the farthest from the processor.
- Each DIMM can have a maximum capacity of 16 GB.
- CPU speed is 800 MHz, 1067 MHz, or 1333 MHz depending on DIMM population.
- DIMM voltage is 1.5V and LV 1.35V.
- All valid DIMM configurations are supported, provided the total node power is rated below the maximum value.

Follow these guidelines when installing DIMMs in the server:

- Install DIMMs in pairs while following the population rules listed in the following table.
- Install DIMMs in decreasing capacity with the largest DIMMs installed in the banks farthest away from each processor.
- Use only HP DIMM part numbers listed in the server QuickSpecs.

DIMM population order

	DIMM slot	DIMM slot	DIMM slot
Configuration	**6A & 4B**	**2C & 5D**	**3E & 1F**
CPU 1	1st	2nd	3rd
CPU 2	1st	2nd	3rd

The server memory protection mode is Advanced ECC memory. In Advanced ECC, the server does not fail because of correctable memory errors. The server provides notification if the level of correctable errors exceeds a predefined threshold rate. Advanced ECC provides additional protection over standard ECC, because it is possible to correct certain memory errors that would otherwise be uncorrectable and result in a server failure. For example, standard ECC can only correct single-bit memory errors, whereas Advanced ECC can correct single-bit memory errors and multi-bit memory errors if all failed bits are on the same DRAM device on the DIMM.

Installing a DIMM

CAUTION: For proper cooling, do not operate the server without the access panel, baffles, expansion slot covers, or blanks installed. If the server supports hot-plug components, minimize the amount of time the access panel is open.

To install the component:

1. Power down the server (on page 17).
2. Disconnect all peripheral cables from the server.

3. Remove the server from the chassis ("Removing the server from the chassis" on page 17).
4. Open the DIMM slot latches.
5. Install the DIMM.

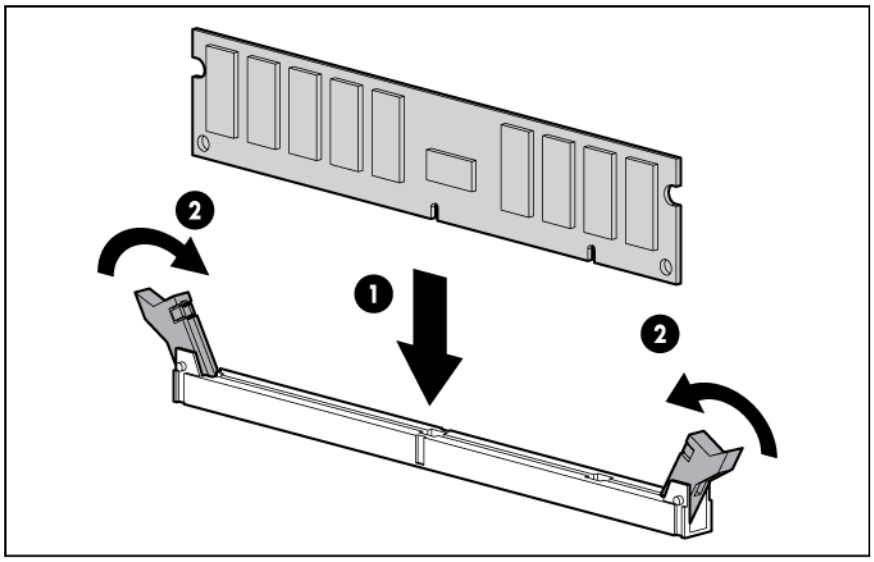

6. Install the server into the chassis ("Installing the server into the chassis" on page 22).
7. Connect the peripheral devices to the server.
8. Power up the server ("Powering up and configuring the server" on page 24).

Expansion board options

The server supports PCI, PCI-X, and PCI Express expansion boards.

Installing a low-profile expansion board

1. Power down the server (on page 17).
2. Disconnect all peripheral cables from the server.
3. Remove the server from the chassis ("Removing the server from the chassis" on page 17).
4. Remove the PCI riser cage.

5. Remove the expansion slot cover.

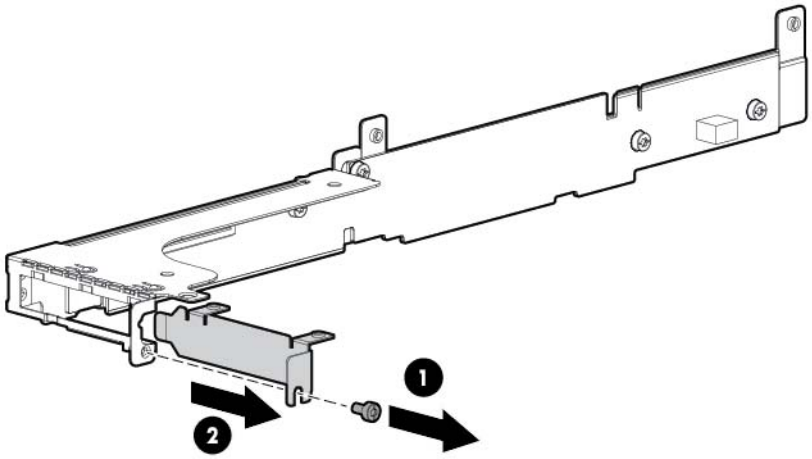

6. Install a low-profile expansion board.

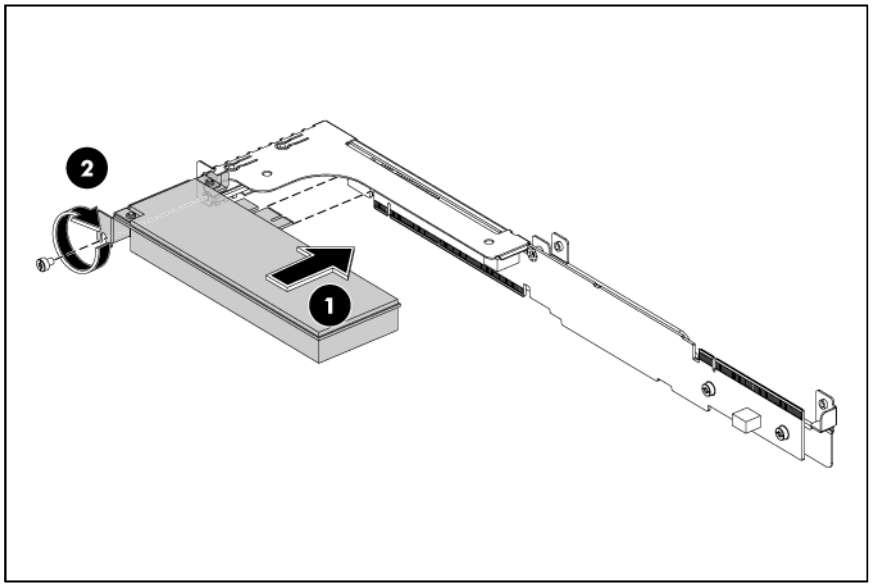

7. Install the PCI riser cage.

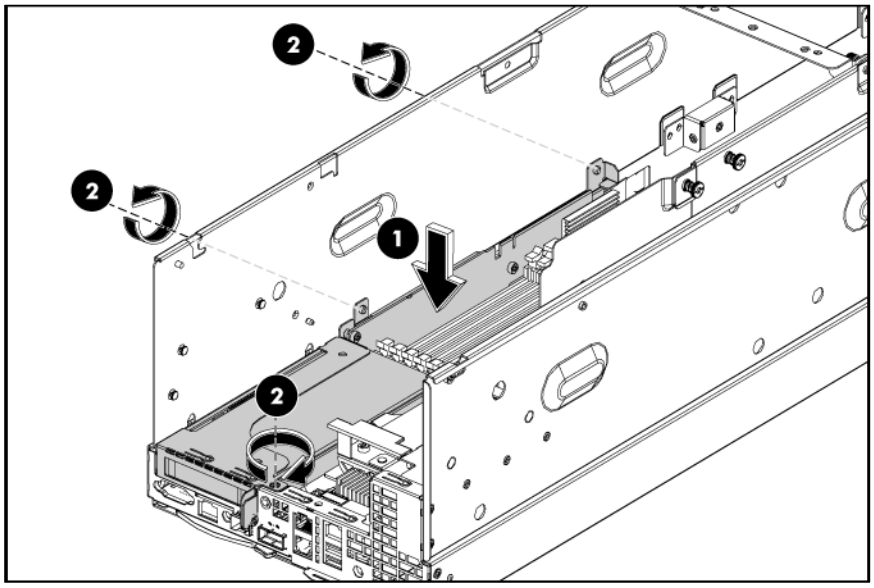

8. Connect all necessary internal cabling to the expansion board. For more information on these cabling requirements, see the documentation that ships with the option.
9. Install the server into the chassis ("Installing the server into the chassis" on page 22).
10. Connect the peripheral devices to the server.
11. Power up the server ("Powering up and configuring the server" on page 24).

PCIe riser board option

△ **CAUTION:** For proper cooling, do not operate the server without the access panel, baffles, expansion slot covers, or blanks installed. If the server supports hot-plug components, minimize the amount of time the access panel is open.

To install the component:

1. Power down the server (on page 17).
2. Disconnect all peripheral cables from the server.
3. Remove the server from the chassis ("Removing the server from the chassis" on page 17).
4. Remove the PCI riser cage.

5. Install the riser board.

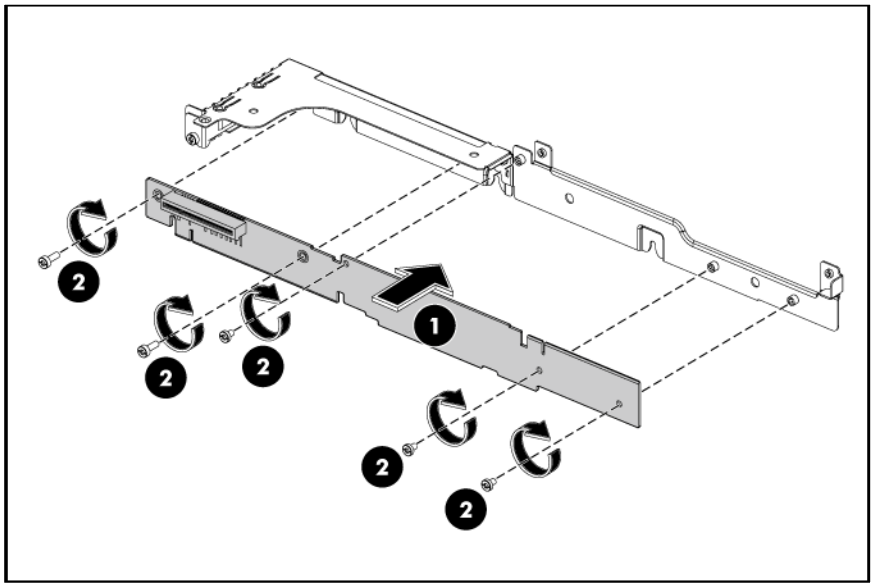

6. Install the PCI riser cage.

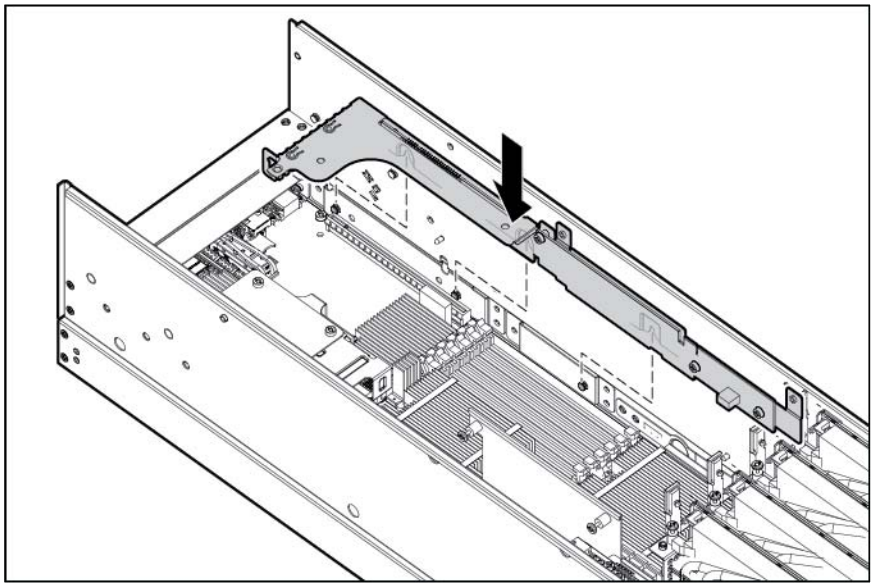

7. Install the server into the chassis ("Installing the server into the chassis" on page 22).
8. Connect the peripheral devices to the server.
9. Power up the server ("Powering up and configuring the server" on page 24).

Cabling

SAS or SATA power cabling options

For server-specific SAS or SATA power cabling installation instructions, see the installation sheet included with the option kit.

Battery cabling for BBWC

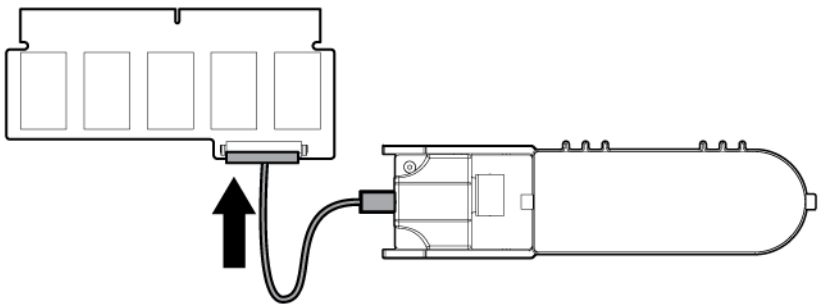

Configuration and utilities

Configuration tools

SmartStart software

SmartStart is a collection of software that optimizes single-server setup, providing a simple and consistent way to deploy server configuration. SmartStart has been tested on many ProLiant server products, resulting in proven, reliable configurations.

SmartStart assists the deployment process by performing a wide range of configuration activities, including:

- Preparing the system for installing "off-the-shelf" versions of leading operating system software
- Installing optimized server drivers, management agents, and utilities automatically with every assisted installation
- Testing server hardware using the Insight Diagnostics Utility ("HP Insight Diagnostics" on page 45)
- Installing software drivers directly from the CD. With systems that have Internet connection, the SmartStart Autorun Menu provides access to a complete list of ProLiant system software.
- Enabling access to the Array Configuration Utility and Erase Utility (on page 43)

SmartStart is included in the HP Insight Foundation suite for ProLiant. For more information about SmartStart software, see the HP Insight Foundation suite for ProLiant or the HP website (http://www.hp.com/go/foundation).

SmartStart Scripting Toolkit

The SmartStart Scripting Toolkit is a server deployment product that allows you to build an unattended automated installation for high-volume server deployments. The SmartStart Scripting Toolkit is designed to support ProLiant BL, ML, DL, and SL servers. The toolkit includes a modular set of utilities and important documentation that describes how to apply these tools to build an automated server deployment process.

The Scripting Toolkit provides a flexible way to create standard server configuration scripts. These scripts are used to automate many of the manual steps in the server configuration process. This automated server configuration process cuts time from each deployment, making it possible to scale rapid, high-volume server deployments.

For more information, and to download the SmartStart Scripting Toolkit, see the HP website (http://www.hp.com/servers/sstoolkit).

Configuration Replication Utility

CONREP is shipped in the SmartStart Scripting Toolkit and is a program that works with RBSU to replicate hardware configuration on ProLiant servers. This utility is run during State 0, Run Hardware Configuration Utility, when doing a scripted server deployment. CONREP reads the state of the system environment variables to determine the configuration and then writes the results to an editable script file. This file can then be deployed across multiple servers with similar hardware and software components. For more information,

refer to the *SmartStart Scripting Toolkit User Guide* on the HP website (http://h18004.www1.hp.com/products/servers/management/toolkit/documentation.html).

HP ROM-Based Setup Utility

RBSU is a configuration utility embedded in HP ProLiant servers that performs a wide range of configuration activities that can include the following:

- Configuring system devices and installed options
- Enabling and disabling system features
- Displaying system information
- Selecting the primary boot controller
- Configuring memory options
- Language selection

For more information on RBSU, see the *HP ROM-Based Setup Utility User Guide* on the Documentation CD or the HP website (http://www.hp.com/support/smartstart/documentation).

Using RBSU

To use RBSU, use the following keys:

- To access RBSU, press the **F9** key during power-up when prompted.
- To navigate the menu system, use the arrow keys.
- To make selections, press the **Enter** key.
- To access Help for a highlighted configuration option, press the **F1** key.

IMPORTANT: RBSU automatically saves settings when you press the **Enter** key. The utility does not prompt you for confirmation of settings before you exit the utility. To change a selected setting, you must select a different setting and press the **Enter** key.

Default configuration settings are applied to the server at one of the following times:

- Upon the first system power-up
- After defaults have been restored

Default configuration settings are sufficient for proper typical server operation, but configuration settings can be modified using RBSU. The system will prompt you for access to RBSU with each power-up.

Auto-configuration process

The auto-configuration process automatically runs when you boot the server for the first time. During the power-up sequence, the system ROM automatically configures the entire system without needing any intervention. During this process, the ORCA utility, in most cases, automatically configures the array to a default setting based on the number of drives connected to the server.

NOTE: The server may not support all the following examples.

NOTE: If the boot drive is not empty or has been written to in the past, ORCA does not automatically configure the array. You must run ORCA to configure the array settings.

Drives installed	Drives used	RAID level
1	1	RAID 0
2	2	RAID 1
3, 4, 5, or 6	3, 4, 5, or 6	RAID 5
More than 6	0	None

To change any ORCA default settings and override the auto-configuration process, press the **F8** key when prompted.

By default, the auto-configuration process configures the system for the English language. To change any default settings in the auto-configuration process (such as the settings for language, operating system, and primary boot controller), execute RBSU by pressing the **F9** key when prompted. After the settings are selected, exit RBSU and allow the server to reboot automatically.

For more information on RBSU, see the *HP ROM-Based Setup Utility User Guide* on the Documentation CD or the HP website (http://www.hp.com/support/smartstart/documentation).

Boot options

Near the end of the boot process, the boot options screen is displayed. This screen is visible for several seconds before the system attempts to boot from a supported boot device. During this time, you can do the following:

- Access RBSU by pressing the **F9** key.
- Access the System Maintenance Menu (which enables you to launch ROM-based Diagnostics or Inspect) by pressing the **F10** key.
- Force a PXE Network boot by pressing the **F12** key.

BIOS Serial Console

BIOS Serial Console allows you to configure the serial port to view POST error messages and run RBSU remotely through a serial connection to the server COM port. The server that you are remotely configuring does not require a keyboard and mouse.

For more information about BIOS Serial Console, see the *BIOS Serial Console User Guide* on the Documentation CD or the HP website (http://www.hp.com/support/smartstart/documentation).

Array Configuration Utility

ACU is a browser-based utility with the following features:

- Runs as a local application or remote service
- Supports online array capacity expansion, logical drive extension, assignment of online spares, and RAID or stripe size migration
- Suggests the optimum configuration for an unconfigured system
- Provides different operating modes, enabling faster configuration or greater control over the configuration options

- Remains available any time that the server is on
- Displays on-screen tips for individual steps of a configuration procedure
- Beginning with ACU version 8.28.13.0, provides diagnostic functionality on the Diagnostics tab (formerly known as Array Diagnostics Utility).

For optimum performance, the minimum display settings are 1024 × 768 resolution and 16-bit color. Servers running Microsoft® operating systems require one of the following supported browsers:

- Internet Explorer 6.0 or later
- Mozilla Firefox 2.0 or later

For Linux servers, see the README.TXT file for additional browser and support information.

For more information about the controller and its features, see the *HP Smart Array Controllers for HP ProLiant Servers User Guide* on the HP website (http://www.hp.com/support/SAC_UG_ProLiantServers_en). To configure arrays, see the *Configuring Arrays on HP Smart Array Controllers Reference Guide* on the HP website (http://www.hp.com/support/CASAC_RG_en).

Option ROM Configuration for Arrays

Before installing an operating system, you can use the ORCA utility to create the first logical drive, assign RAID levels, and establish online spare configurations.

The utility also provides support for the following functions:

- Reconfiguring one or more logical drives
- Viewing the current logical drive configuration
- Deleting a logical drive configuration
- Setting the controller to be the boot controller
- Selecting the boot volume

If you do not use the utility, ORCA will default to the standard configuration.

For more information regarding the default configurations that ORCA uses, see the *HP ROM-Based Setup Utility User Guide* on the Documentation CD.

For more information about the controller and its features, see the *HP Smart Array Controllers for HP ProLiant Servers User Guide* on the HP website (http://www.hp.com/support/SAC_UG_ProLiantServers_en). To configure arrays, see the *Configuring Arrays on HP Smart Array Controllers Reference Guide* on the HP website (http://www.hp.com/support/CASAC_RG_en).

HP Insight Control server deployment (formerly RDP)

HP Insight Control is essential server management that unlocks the management capabilities built into HP ProLiant servers. Insight Control delivers powerful capabilities that enable customers to proactively manage ProLiant server health - whether physical or virtual, deploy ProLiant servers quickly, optimize power consumption, and control ProLiant servers from anywhere.

HP Insight Control server deployment is a key component of Insight Control which provides an automated, simple-to-use solution for bare-metal deployment and configuration of HP ProLiant servers with an operating system or virtualization platform. Insight Control server deployment includes an unaltered Altiris Deployment

Solution while providing optimization for deployment of HP ProLiant servers using HP ProLiant Integration Module.

HP Insight Control facilitates the installation, configuration, and deployment of high-volumes of servers through an intuitive, comprehensive console, using either scripting or imaging technology. It makes deploying a server as easy as selecting one, a few, or hundreds of target servers, selecting predefined images or scripts, and clicking **Run**.

For more information about HP Insight Control, see the HP website (http://www.hp.com/go/insightcontrol).

Re-entering the server serial number and product ID

After you replace the system board, you must re-enter the server serial number and the product ID.

1. During the server startup sequence, press the **F9** key to access RBSU.
2. Select the **System Options** menu.
3. Select **Serial Number**. The following warning is displayed:

   ```
   WARNING! WARNING! WARNING! The serial number is loaded into the system during
   the manufacturing process and should NOT be modified. This option should only
   be used by qualified service personnel. This value should always match the
   serial number sticker located on the chassis.
   ```
4. Press the **Enter** key to clear the warning.
5. Enter the serial number and press the **Enter** key.
6. Select **Product ID**.
7. Enter the product ID and press the **Enter** key.
8. Press the **Esc** key to close the menu.
9. Press the **Esc** key to exit RBSU.
10. Press the **F10** key to confirm exiting RBSU. The server will automatically reboot.

Management tools

Automatic Server Recovery

ASR is a feature that causes the system to restart when a catastrophic operating system error occurs, such as a blue screen, ABEND (does not apply to HP ProLiant DL980 Servers), or panic. A system fail-safe timer, the ASR timer, starts when the System Management driver, also known as the Health Driver, is loaded. When the operating system is functioning properly, the system periodically resets the timer. However, when the operating system fails, the timer expires and restarts the server.

ASR increases server availability by restarting the server within a specified time after a system hang. At the same time, the HP SIM console notifies you by sending a message to a designated pager number that ASR has restarted the system. You can disable ASR from the System Management Homepage or through RBSU.

ROMPaq utility

The ROMPaq utility enables you to upgrade the system firmware (BIOS). To upgrade the firmware, insert a ROMPaq USB Key into an available USB port and boot the system. In addition to ROMPaq, Online Flash Components for Windows and Linux operating systems are available for updating the system firmware.

The ROMPaq utility checks the system and provides a choice (if more than one exists) of available firmware revisions.

For more information, go to the HP website (http://www.hp.com/go/hpsc) and click on **Drivers, Software & Firmware**. Then, enter your product name in the **Find an HP product** field and click **Go**.

To access the server-specific page for this server, enter the following web address into the browser:

http://www.hp.com/support/sl390sg7 (http://www.hp.com/support/sl390sg7)

Integrated Lights-Out 3 technology

The iLO 3 subsystem is a standard component of selected ProLiant servers that provides server health and remote server manageability. The iLO 3 subsystem includes an intelligent microprocessor, secure memory, and a dedicated network interface. This design makes iLO 3 independent of the host server and its operating system. The iLO 3 subsystem provides remote access to any authorized network client, sends alerts, and provides other server management functions.

Using iLO 3, you can:

- Remotely power up, power down, or reboot the host server.
- Send alerts from iLO 3 regardless of the state of the host server.
- Access advanced troubleshooting features through the iLO 3 interface.
- Diagnose iLO 3 using HP SIM through a web browser and SNMP alerting.

For more information about iLO 3 features (which may require an iLO Advanced Pack or iLO Advanced for BladeSystem license), see the iLO 3 documentation on the Documentation CD or on the HP website (http://www.hp.com/servers/lights-out).

Erase Utility

△ **CAUTION:** Perform a backup before running the System Erase Utility. The utility sets the system to its original factory state, deletes the current hardware configuration information, including array setup and disk partitioning, and erases all connected hard drives completely. Refer to the instructions for using this utility.

Run the Erase Utility if you must erase the system for the following reasons:

- You want to install a new operating system on a server with an existing operating system.
- You encounter an error when completing the steps of a factory-installed operating system installation.

To access the Erase Utility, use the System Erase button on the home screen of the SmartStart CD ("SmartStart software" on page 38).

HP ProLiant SL Advanced Power Manager

HP ProLiant SL Advanced Power Manager is a single point of contact for HP ProLiant Scalable System administration.

HP ProLiant SL Advanced Power Manager enables:

- Discovery of server rack components by topology
- Node-level power monitoring and control

- Easy node and identification through UID indicators
- Support of logging through standard syslog servers

For additional information about setting up and using SLAPM, see the *HP ProLiant SL Advanced Power Manager User Guide* (*http://h20000.www2.hp.com/bc/docs/support/SupportManual/c02018322/c02018322.pdf?jumpid=reg_R1002_USEN*).

Redundant ROM support

The server enables you to upgrade or configure the ROM safely with redundant ROM support. The server has an 8-MB ROM that acts as two, separate 4-MB ROMs. In the standard implementation, one side of the ROM contains the current ROM program version, while the other side of the ROM contains a backup version.

NOTE: The server ships with the same version programmed on each side of the ROM.

Safety and security benefits

When you flash the system ROM, ROMPaq writes over the backup ROM and saves the current ROM as a backup, enabling you to switch easily to the alternate ROM version if the new ROM becomes corrupted for any reason. This feature protects the existing ROM version, even if you experience a power failure while flashing the ROM.

USB support and functionality

USB support

HP provides both standard USB 2.0 support and legacy USB 2.0 support. Standard support is provided by the OS through the appropriate USB device drivers. Before the OS loads, HP provides support for USB devices through legacy USB support, which is enabled by default in the system ROM.

Legacy USB support provides USB functionality in environments where USB support is not available normally. Specifically, HP provides legacy USB functionality for the following:

- POST
- RBSU
- Diagnostics
- DOS
- Operating environments which do not provide native USB support

Internal USB functionality

An internal USB connector is available for use with USB drive keys only. This solution provides for use of a permanent boot drive from a USB drive key installed in the internal connector, avoiding issues of clearance on the front of the rack and physical access to secure data.

For additional security, you can disable the external USB connectors through RBSU. Disabling the rear USB connectors in RBSU disables both rear USB ports.

External USB functionality

HP provides external USB support to enable local connection of USB devices for server administration, configuration, and diagnostic procedures.

For additional security, external USB functionality can be disabled through RBSU.

Diagnostic tools

HP Insight Diagnostics

HP Insight Diagnostics is a proactive server management tool, available in both offline and online versions, that provides diagnostics and troubleshooting capabilities to assist IT administrators who verify server installations, troubleshoot problems, and perform repair validation.

HP Insight Diagnostics Offline Edition performs various in-depth system and component testing while the OS is not running. To run this utility, launch the SmartStart CD.

HP Insight Diagnostics Online Edition is a web-based application that captures system configuration and other related data needed for effective server management. Available in Microsoft® Windows® and Linux versions, the utility helps to ensure proper system operation.

For more information or to download the utility, refer to the HP website (http://www.hp.com/servers/diags).

HP Insight Diagnostics survey functionality

HP Insight Diagnostics (on page 45) provides survey functionality that gathers critical hardware and software information on ProLiant servers.

This functionality supports operating systems that may not be supported by the server. For operating systems supported by the server, see the HP website (http://www.hp.com/go/supportos).

If a significant change occurs between data-gathering intervals, the survey function marks the previous information and overwrites the survey data files to reflect the latest changes in the configuration.

Survey functionality is installed with every SmartStart-assisted HP Insight Diagnostics installation, or it can be installed through the HP PSP ("ProLiant Support Packs" on page 47).

NOTE: The current version of SmartStart provides the memory spare part numbers for the server. To download the latest version, see the HP website (http://www.hp.com/support).

Integrated Management Log

The IML records hundreds of events and stores them in an easy-to-view form. The IML timestamps each event with 1-minute granularity.

You can view recorded events in the IML in several ways, including the following:

- From within HP SIM
- From within Survey Utility
- From within operating system-specific IML viewers
  - For NetWare: IML Viewer (does not apply to HP ProLiant DL980 Servers)

- For Windows®: IML Viewer
- For Linux: IML Viewer Application

- From within the iLO 3 user interface
- From within HP Insight Diagnostics (on page 45)

For more information, see the Management CD or DVD in the HP Insight Foundation suite for ProLiant.

Remote support and analysis tools

HP Insight Remote Support software

HP strongly recommends that you install HP Insight Remote Support software to complete the installation or upgrade of your product and to enable enhanced delivery of your HP Warranty, HP Care Pack Service, or HP contractual support agreement. HP Insight Remote Support supplements your monitoring 24 x 7 to ensure maximum system availability by providing intelligent event diagnosis, and automatic, secure submission of hardware event notifications to HP, which will initiate a fast and accurate resolution, based on your product's service level. Notifications may be sent to your authorized HP Channel Partner for on-site service, if configured and available in your country. The software is available in two variants:

- HP Insight Remote Support Standard: This software supports server and storage devices and is optimized for environments with 1–50 servers. Ideal for customers who can benefit from proactive notification but do not need proactive service delivery and integration with a management platform.
- HP Insight Remote Support Advanced: This software provides comprehensive remote monitoring and proactive service support for nearly all HP servers, storage, network, and SAN environments, plus selected non-HP servers that have a support obligation with HP. It is integrated with HP Systems Insight Manager. A dedicated server is recommended to host both HP Systems Insight Manager and HP Insight Remote Support Advanced.

Details for both versions are available on the HP website (http://www.hp.com/go/insightremotesupport).

To download the software, go to Software Depot (http://www.software.hp.com).

Select **Insight Remote Support** from the menu on the right.

Keeping the system current

Drivers

The server includes new hardware that may not have driver support on all operating system installation media.

If you are installing a SmartStart-supported operating system, use the SmartStart software (on page 38) and its Assisted Path feature to install the operating system and latest driver support.

> **NOTE:** If you are installing drivers from the SmartStart CD or the Software Maintenance CD, refer to the SmartStart website (http://www.hp.com/servers/smartstart) to be sure that you are using the latest version of SmartStart. For more information, refer to the documentation provided with the SmartStart CD.

If you do not use the SmartStart CD to install an operating system, drivers for some of the new hardware are required. These drivers, as well as other option drivers, ROM images, and value-add software can be downloaded from the HP website (http://www.hp.com/support).

IMPORTANT: Always perform a backup before installing or updating device drivers.

ProLiant Support Packs

PSPs represent operating system-specific bundles of ProLiant optimized drivers, utilities, and management agents. Refer to the PSP website (http://h18000.www1.hp.com/products/servers/management/psp.html).

Operating system version support

Refer to the operating system support matrix (http://www.hp.com/go/supportos).

Change control and proactive notification

HP offers Change Control and Proactive Notification to notify customers 30 to 60 days in advance of upcoming hardware and software changes on HP commercial products.

For more information, refer to the HP website (http://www.hp.com/go/pcn).

Care Pack

HP Care Pack Services offer upgraded service levels to extend and expand bundled services with easy-to-buy, easy-to-use support packages that help you make the most of your server investments. For more information, see the HP website (http://www.hp.com/services/carepack).

Troubleshooting

Troubleshooting resources

The *HP ProLiant Servers Troubleshooting Guide* provides procedures for resolving common problems and comprehensive courses of action for fault isolation and identification, error message interpretation, issue resolution, and software maintenance on ProLiant servers and server blades. This guide includes problem-specific flowcharts to help you navigate complex troubleshooting processes. To view the guide, select a language:

- English (http://www.hp.com/support/ProLiant_TSG_en)
- French (http://www.hp.com/support/ProLiant_TSG_fr)
- Italian (http://www.hp.com/support/ProLiant_TSG_it)
- Spanish (http://www.hp.com/support/ProLiant_TSG_sp)
- German (http://www.hp.com/support/ProLiant_TSG_gr)
- Dutch (http://www.hp.com/support/ProLiant_TSG_nl)
- Japanese (http://www.hp.com/support/ProLiant_TSG_jp)

The *HP BladeSystem c-Class Enclosure Troubleshooting Guide* provides procedures and solutions for troubleshooting HP BladeSystem c-Class enclosures. This guide explains how to use the Insight Display to troubleshoot enclosures, and it includes a flowchart to help you navigate the troubleshooting process. To view the guide, see the HP website (http://www.hp.com/support/BladeSystem_Enclosure_TSG_en).

Pre-diagnostic steps

WARNING: To avoid potential problems, ALWAYS read the warnings and cautionary information in the server documentation before removing, replacing, reseating, or modifying system components.

IMPORTANT: This guide provides information for multiple servers. Some information may not apply to the server you are troubleshooting. Refer to the server documentation for information on procedures, hardware options, software tools, and operating systems supported by the server.

1. Review the important safety information (on page 48).
2. Gather symptom information (on page 50).
3. Prepare the server for diagnosis (on page 50).
4. Use the Start diagnosis flowchart (on page 53) to begin the diagnostic process.

Important safety information

Familiarize yourself with the safety information in the following sections before troubleshooting the server.

Important safety information

Before servicing this product, read the *Important Safety Information* document provided with the server.

Symbols on equipment

The following symbols may be placed on equipment to indicate the presence of potentially hazardous conditions.

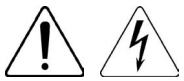

This symbol indicates the presence of hazardous energy circuits or electric shock hazards. Refer all servicing to qualified personnel.
WARNING: To reduce the risk of injury from electric shock hazards, do not open this enclosure. Refer all maintenance, upgrades, and servicing to qualified personnel.



This symbol indicates the presence of electric shock hazards. The area contains no user or field serviceable parts. Do not open for any reason.
WARNING: To reduce the risk of injury from electric shock hazards, do not open this enclosure.



This symbol on an RJ-45 receptacle indicates a network interface connection.
WARNING: To reduce the risk of electric shock, fire, or damage to the equipment, do not plug telephone or telecommunications connectors into this receptacle.

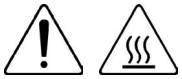

This symbol indicates the presence of a hot surface or hot component. If this surface is contacted, the potential for injury exists.
WARNING: To reduce the risk of injury from a hot component, allow the surface to cool before touching.

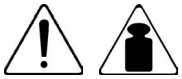

21.36 - 27.27 kg
47.10 - 60.12 lb

This symbol indicates that the component exceeds the recommended weight for one individual to handle safely.
WARNING: To reduce the risk of personal injury or damage to the equipment, observe local occupational health and safety requirements and guidelines for manual material handling.



These symbols, on power supplies or systems, indicate that the equipment is supplied by multiple sources of power.
WARNING: To reduce the risk of injury from electric shock, remove all power cords to completely disconnect power from the system.

Warnings

WARNING: Only authorized technicians trained by HP should attempt to repair this equipment. All troubleshooting and repair procedures are detailed to allow only subassembly/module-level repair. Because of the complexity of the individual boards and subassemblies, no one should attempt to make repairs at the component level or to make modifications to any printed wiring board. Improper repairs can create a safety hazard.

⚠ **WARNING:** To reduce the risk of personal injury or damage to the equipment, be sure that:

- The leveling feet are extended to the floor.
- The full weight of the rack rests on the leveling feet.
- The stabilizing feet are attached to the rack if it is a single-rack installation.
- The racks are coupled together in multiple-rack installations.
- Only one component is extended at a time. A rack may become unstable if more than one component is extended for any reason.

Symptom information

Before troubleshooting a server problem, collect the following information:

- What events preceded the failure? After which steps does the problem occur?
- What has been changed since the time the server was working?
- Did you recently add or remove hardware or software? If so, did you remember to change the appropriate settings in the server setup utility, if necessary?
- How long has the server exhibited problem symptoms?
- If the problem occurs randomly, what is the duration or frequency?

To answer these questions, the following information may be useful:

- Run HP Insight Diagnostics (on page 45) and use the survey page to view the current configuration or to compare it to previous configurations.
- Refer to your hardware and software records for information.
- Refer to server LEDs and their statuses.

Prepare the server for diagnosis

1. Be sure the server is in the proper operating environment with adequate power, air conditioning, and humidity control. For required environmental conditions, see the server documentation.
2. Record any error messages displayed by the system.
3. Remove all diskettes, CD-ROMs, DVD-ROMs, and USB drive keys.
4. Power down the server and peripheral devices if you will be diagnosing the server offline. If possible, always perform an orderly shutdown:
   a. Exit any applications.
   b. Exit the operating system.
   c. Power down the server (on page 17).
5. Disconnect any peripheral devices not required for testing (any devices not necessary to power up the server). Do not disconnect the printer if you want to use it to print error messages.
6. Collect all tools and utilities, such as a Torx screwdriver, loopback adapters, ESD wrist strap, and software utilities, necessary to troubleshoot the problem.
   - You must have the appropriate Health Drivers and Management Agents installed on the server.

     To verify the server configuration, connect to the System Management Homepage (http://h18013.www1.hp.com/products/servers/management/agents/index.html) and select

Version Control Agent. The VCA gives you a list of names and versions of all installed HP drivers, Management Agents, and utilities, and whether they are up-to-date.

- HP recommends you have access to the server documentation for server-specific information.
- HP recommends you have access to the SmartStart CD for value-added software and drivers required during the troubleshooting process. Download the current version of SmartStart from the HP website (http://www.hp.com/servers/smartstart).

Performing processor procedures in the troubleshooting process

Before performing any troubleshooting steps that involve processors, review the following guidelines:

- Be sure that only authorized personnel perform the troubleshooting steps that involve installing, removing, or replacing a processor.
- Always locate the documentation for your processor model before performing **any** steps that require installing, removing, or replacing a processor. If you cannot locate the hard copy of the instructions that shipped with the processor, see the processor instructions in this document.
- Some processor models require the use of a processor installation tool, and specific steps are documented to ensure that you do not damage the processor or processor socket on the system board. For server models that have pins inside the processor socket, remember that **THE PINS ON THE SYSTEM BOARD ARE VERY FRAGILE AND EASILY DAMAGED**. If you damage the socket, you must replace the system board.
- Depending on the server model, the contacts may be on the processor or they may be inside the processor socket. Never touch the contacts. **THE PINS ON THE SYSTEM BOARD ARE VERY FRAGILE AND EASILY DAMAGED**. If the contacts inside the processor socket are damaged, the system board must be replaced.
- Always complete all other troubleshooting procedures before removing or replacing a processor.

Breaking the server down to the minimum hardware configuration

During the troubleshooting process, you may be asked to break the server down to the minimum hardware configuration. A minimum configuration consists of only the components needed to boot the server and successfully pass POST.

When requested to break the server down to the minimum configuration, uninstall the following components, if installed:

- All additional DIMMs

  Leave only the minimum required to boot the server—either one DIMM or a pair of DIMMs. For more information, see the memory guidelines in the server user guide.
- All additional cooling fans, if applicable

  For the minimum fan configuration, see the server user guide.
- All additional power supplies, if applicable (leave one installed)
- All hard drives
- All optical drives (DVD-ROM, CD-ROM, and so forth)
- All optional mezzanine cards
- All expansion boards

Before removing the components, be sure to determine the minimum configuration for each component and follow all guidelines in the server user guide.

Always use the recommended minimum configuration above before removing any processors. If you are unable to isolate the issue with the configuration above, you will then remove all but one of the processors.

> △ **CAUTION:** Before removing or replacing any processors, be sure to follow the guidelines provided in "Performing processor procedures in the troubleshooting process (on page 51)." Failure to follow the recommended guidelines can cause damage to the system board, requiring replacement of the system board.

Service notifications

To view the latest service notifications, refer to the HP website (http://www.hp.com/go/bizsupport). Select the appropriate server model, and then click the **Troubleshoot a Problem** link on the product page.

Loose connections

Action:

- Be sure all power cords are securely connected.
- Be sure all cables are properly aligned and securely connected for all external and internal components.
- Remove and check all data and power cables for damage. Be sure no cables have bent pins or damaged connectors.
- If a fixed cable tray is available for the server, be sure the cords and cables connected to the server are routed correctly through the tray.
- Be sure each device is properly seated. Avoid bending or flexing circuit boards when reseating components.
- If a device has latches, be sure they are completely closed and locked.
- Check any interlock or interconnect LEDs that may indicate a component is not connected properly.
- If problems continue to occur, remove and reinstall each device, checking the connectors and sockets for bent pins or other damage.
- For HP ProLiant BL c-Class Server Blades, be sure the OA tray is seated properly.

Server health LEDs

Some servers have an internal health LED and an external health LED, while other servers have a single system health LED. The system health LED provides the same functionality as the two separate internal and external health LEDs. Depending on the model, the internal health LED and external health LED may either appear solid or they may flash. Both conditions represent the same symptom.

For the location of server LEDs and information on their statuses, see the server documentation on the HP website (http://www.hp.com/support).

Troubleshooting flowcharts

To effectively troubleshoot a problem, HP recommends that you start with the first flowchart in this section, "Start diagnosis flowchart (on page 53)," and follow the appropriate diagnostic path. If the other flowcharts do not provide a troubleshooting solution, follow the diagnostic steps in "General diagnosis flowchart (on page 54)." The General diagnosis flowchart is a generic troubleshooting process to be used when the problem is not server-specific or is not easily categorized into the other flowcharts.

The available flowcharts include:

- Start diagnosis flowchart (on page 53)
- General diagnosis flowchart (on page 54)
- Server blade power-on problems flowchart (on page 56)
- POST problems flowchart (on page 58)
- OS boot problems flowchart (on page 60)
- Server fault indications flowchart (on page 62)

Start diagnosis flowchart

Use the following flowchart to start the diagnostic process.

Item	See
1	"General diagnosis flowchart (on page 54)"
2	"Power-on problems flowchart ("Server blade power-on problems flowchart" on page 56)"
3	"POST problems flowchart (on page 58)"
4	"OS boot problems flowchart (on page 60)"
5	"Server fault indications flowchart (on page 62)"

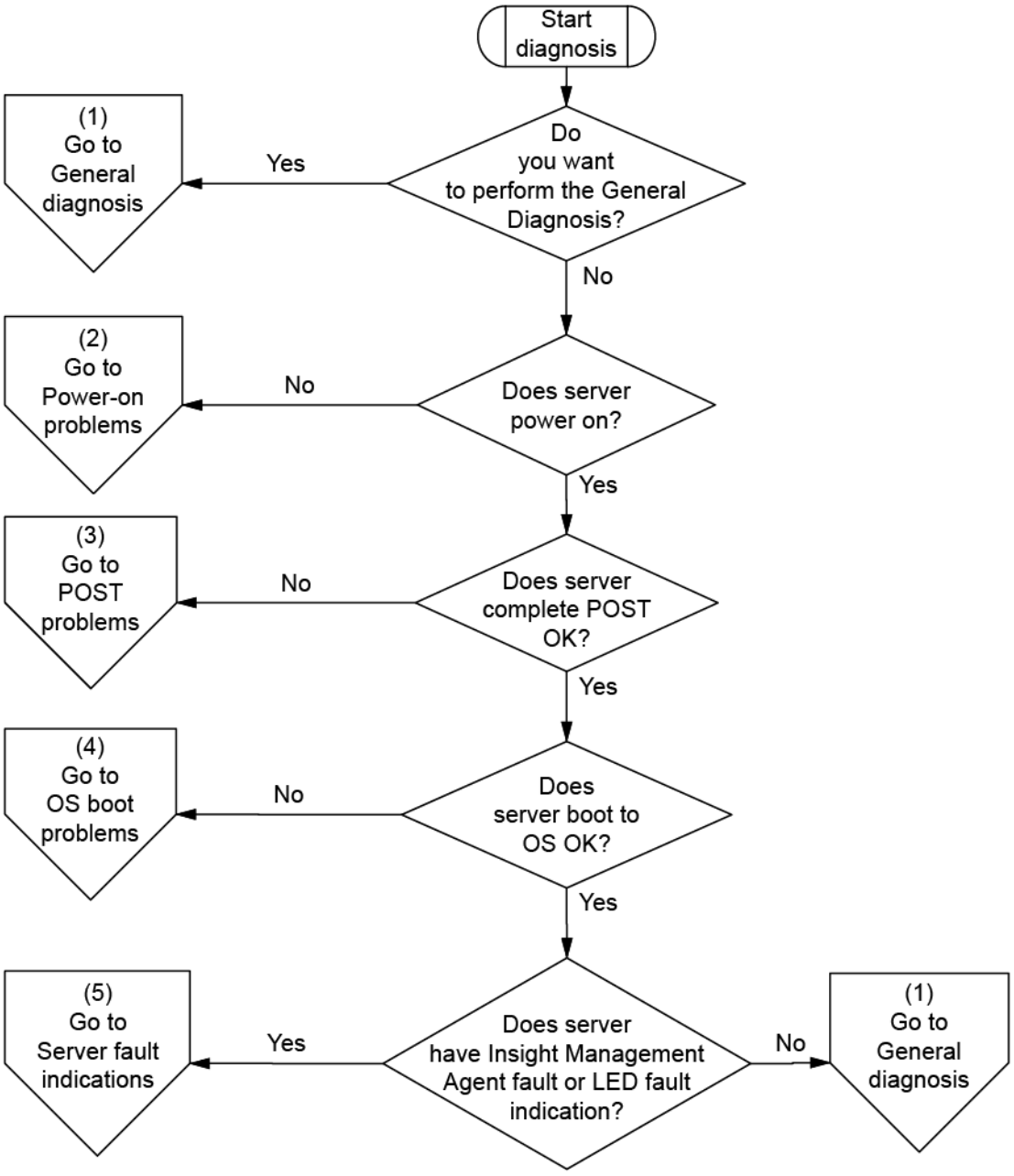

General diagnosis flowchart

The General diagnosis flowchart provides a generic approach to troubleshooting. If you are unsure of the problem, or if the other flowcharts do not fix the problem, use the following flowchart.

Item	See
1	"Symptom information (on page 50)"
2	"Loose connections (on page 52)"
3	"Service notifications (on page 52)"

Item	See
4	The most recent version of a particular server blade or option firmware is available on the HP Support website (http://www.hp.com/support).
5	"General memory problems are occurring" in the *HP ProLiant Servers Troubleshooting Guide* located on the Documentation CD or see "Troubleshooting resources (on page 48)"
6	• Maintenance and service guides for p-Class server blades, located on the Documentation CD or the HP website (http://www.hp.com/products/servers/proliant-bl/p-class/info) • Maintenance and service guides for c-Class server blades, located on the Documentation CD or the HP website (http://www.hp.com/go/bladesystem/documentation)
7	• Maintenance and service guides for p-Class server blades, located on the Documentation CD or the HP website (http://www.hp.com/products/servers/proliant-bl/p-class/info) • Maintenance and service guides for c-Class server blades, located on the Documentation CD or the HP website (http://www.hp.com/go/bladesystem/documentation) • "Hardware problems" in the *HP ProLiant Servers Troubleshooting Guide* located on the Documentation CD or see "Troubleshooting resources (on page 48)"
8	"Breaking the server down to the minimum hardware configuration (on page 51)" in the *HP ProLiant Servers Troubleshooting Guide* located on the Documentation CD or see "Troubleshooting resources (on page 48)"
9	• "Server information you need" in the *HP ProLiant Servers Troubleshooting Guide* located on the Documentation CD or see "Troubleshooting resources (on page 48)" • "Operating system information you need" in the *HP ProLiant Servers Troubleshooting Guide* located on the Documentation CD or see "Troubleshooting resources (on page 48)"
10	"HP contact information (on page 70)"

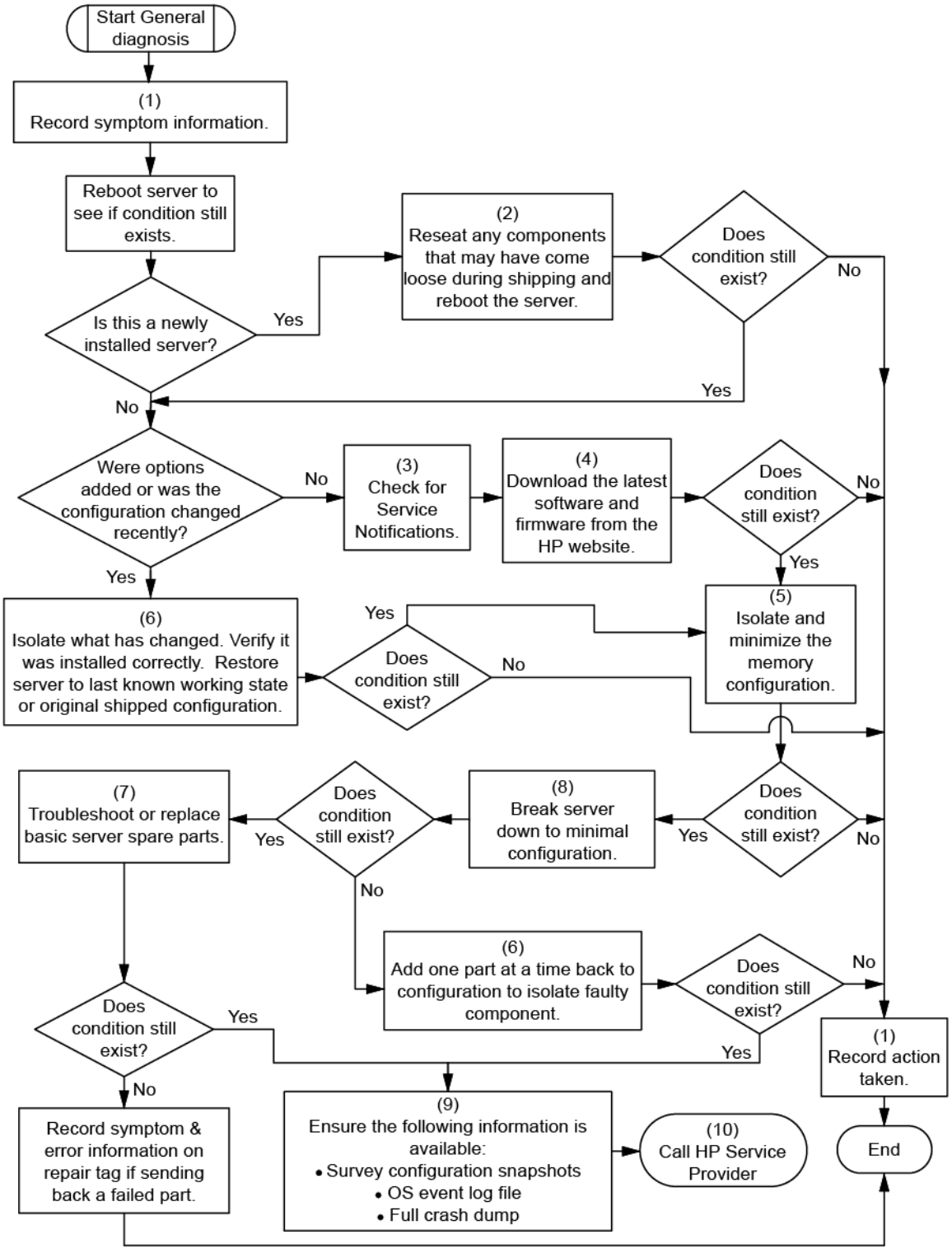

Server blade power-on problems flowchart

Symptoms:

- The server does not power on.
- The system power LED is off or amber.

- The health LED is red or amber.

  NOTE: For the location of server LEDs and information on their statuses, refer to the server documentation.

Possible causes:

- Improperly seated or faulty power supply
- Loose or faulty power cord
- Power source problem
- Power on circuit problem
- Improperly seated component or interlock problem
- Faulty internal component

Item	See
1	"Component identification (on page 6)"
2	Maintenance and service guides for c-Class server blades, located on the HP website (http://www.hp.com/go/bladesystem/documentation)
3	*Integrated Lights-Out User Guide* located on the HP website (http://www.hp.com/servers/lights-out)

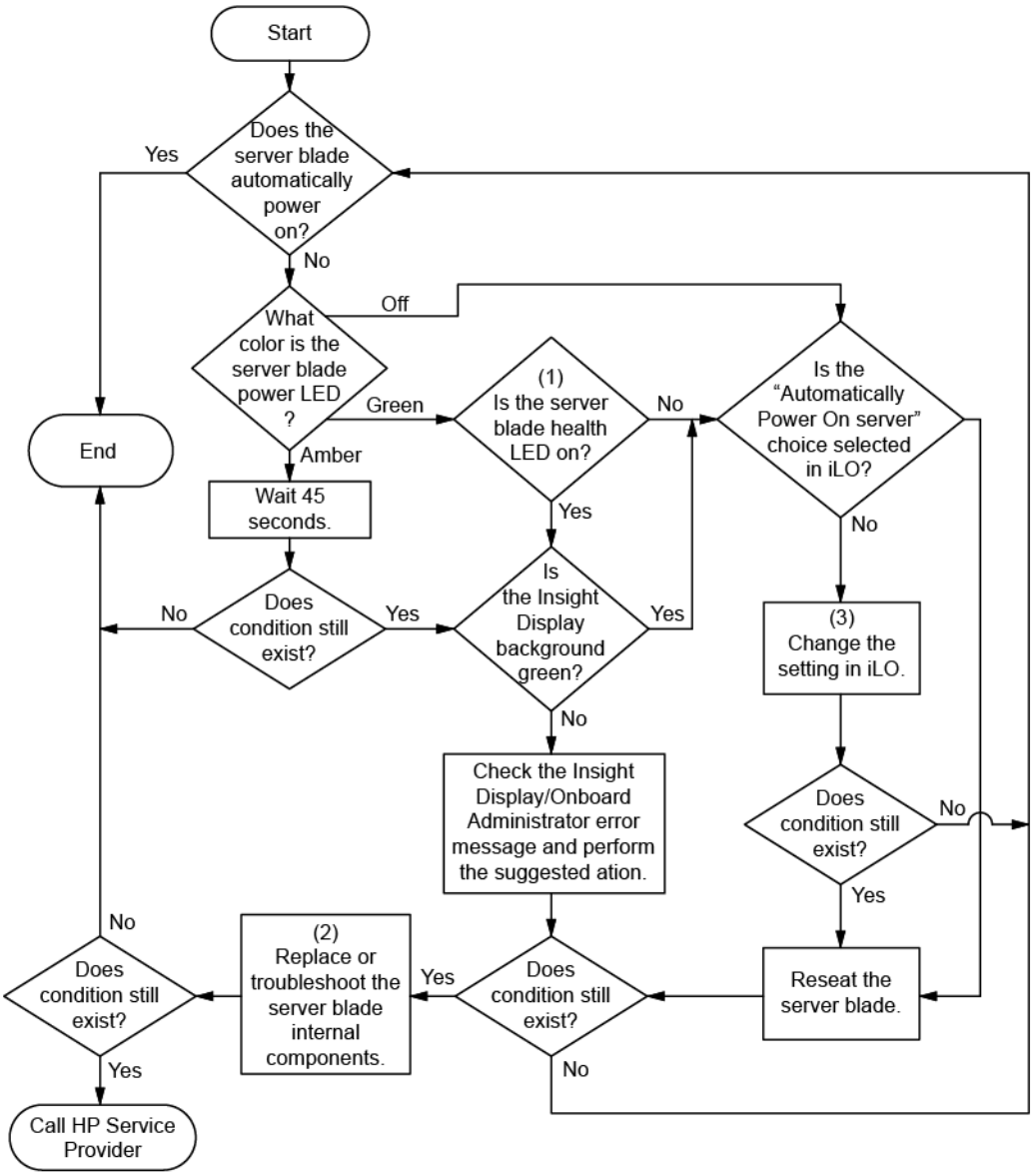

POST problems flowchart

Symptoms:

- Server does not complete POST

  NOTE: The server has completed POST when the system attempts to access the boot device.

- Server completes POST with errors

Possible problems:

- Improperly seated or faulty internal component
- Faulty KVM device
- Faulty video device

Item	See
1	Server blade power-on problems flowchart (on page 56)
2	"POST error messages and beep codes (on page 65)"
3	"Video problems" in the *HP ProLiant Servers Troubleshooting Guide* located on the Documentation CD or see "Troubleshooting resources (on page 48)"
4	"General memory problems are occurring" in the *HP ProLiant Servers Troubleshooting Guide* located on the Documentation CD or see "Troubleshooting resources (on page 48)"
5	"Breaking the server down to the minimum hardware configuration (on page 51)" or in the *HP ProLiant Servers Troubleshooting Guide* located on the Documentation CD or see "Troubleshooting resources (on page 48)"
6	"Symptom information (on page 50)"
7	• "Hardware problems" in the *HP ProLiant Servers Troubleshooting Guide* located on the Documentation CD or see "Troubleshooting resources (on page 48)" • Maintenance and service guides for c-Class server blades, located on the Documentation CD or the HP website (http://www.hp.com/go/bladesystem/documentation)
8	"HP contact information (on page 70)"
9	• "Server information you need" in the *HP ProLiant Servers Troubleshooting Guide* located on the Documentation CD or see "Troubleshooting resources (on page 48)" • "Operating system information you need" in the *HP ProLiant Servers Troubleshooting Guide* located on the Documentation CD or see "Troubleshooting resources (on page 48)"

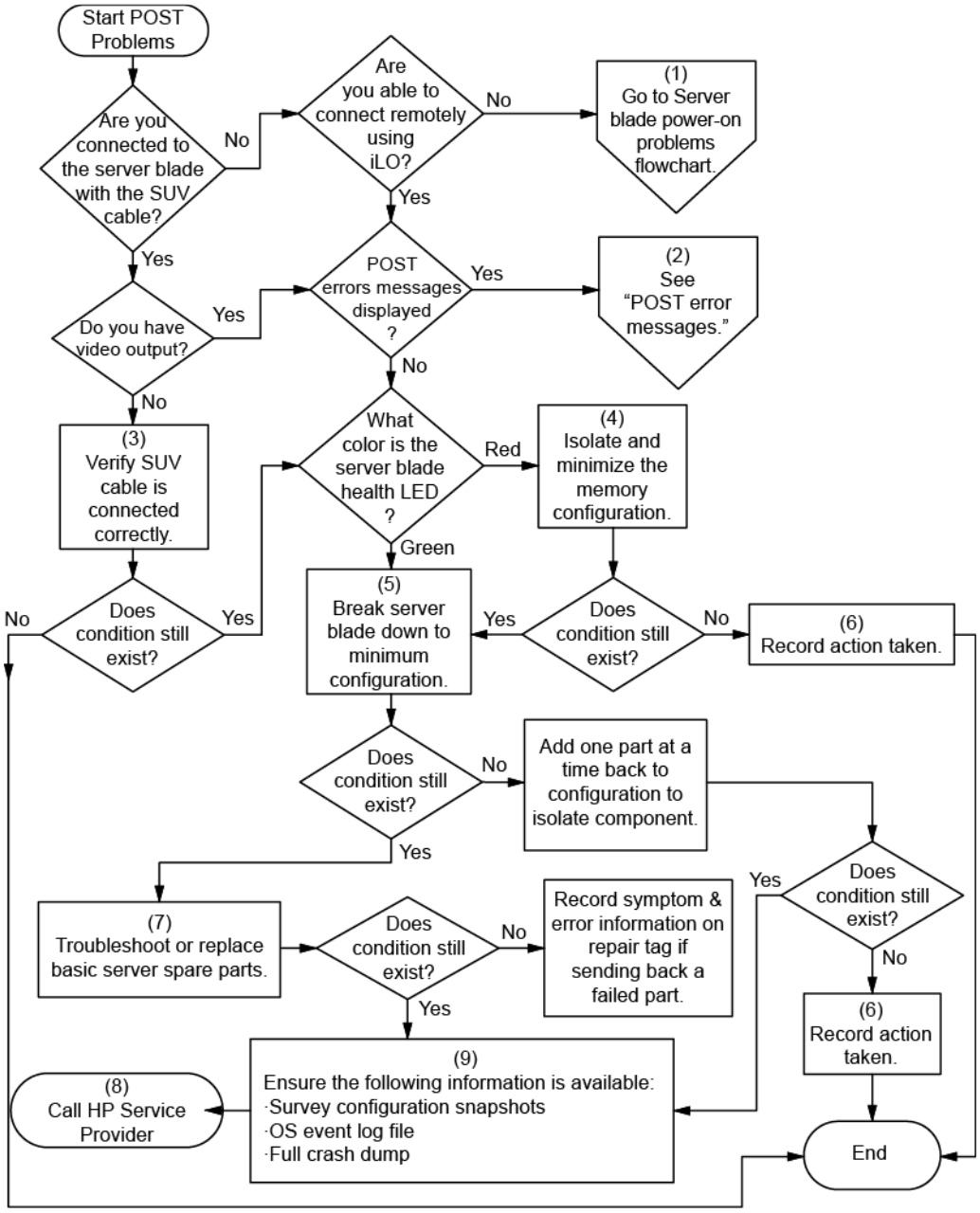

OS boot problems flowchart

There are two ways to use SmartStart when diagnosing OS boot problems on a server blade:

- Use iLO to remotely attach virtual devices to mount the SmartStart CD onto the server blade.
- Use a local I/O cable and drive to connect to the server blade, and then restart the server blade.

Symptoms:

- Server does not boot a previously installed OS
- Server does not boot SmartStart

Possible causes:

- Corrupted OS
- Hard drive subsystem problem
- Incorrect boot order setting in RBSU

Item	See
1	*HP ROM-Based Setup Utility User Guide* (*http://www.hp.com/servers/smartstart*)
2	"POST problems flowchart (on page 58)"
3	• "Hard drive problems" in the *HP ProLiant Servers Troubleshooting Guide* located on the Documentation CD or see "Troubleshooting resources (on page 48)" • Controller documentation
4	"HP Insight Diagnostics (on page 45)" or in the *HP ProLiant Servers Troubleshooting Guide* located on the Documentation CD or see "Troubleshooting resources (on page 48)"
5	• "Loose connections (on page 52)" • "CD-ROM and DVD drive problems" in the *HP ProLiant Servers Troubleshooting Guide* located on the Documentation CD or see "Troubleshooting resources (on page 48)" • Controller documentation
6	"General memory problems are occurring" in the *HP ProLiant Servers Troubleshooting Guide* located on the Documentation CD or see "Troubleshooting resources (on page 48)"
7	• "Operating system problems" in the *HP ProLiant Servers Troubleshooting Guide* located on the Documentation CD or see "Troubleshooting resources (on page 48)" • "HP contact information (on page 70)"
8	• "Hardware problems" in the *HP ProLiant Servers Troubleshooting Guide* located on the Documentation CD or see "Troubleshooting resources (on page 48)" • Maintenance and service guides for p-Class server blades, located on the Documentation CD or the HP website (http://www.hp.com/products/servers/proliant-bl/p-class/info) • Maintenance and service guides for c-Class server blades, located on the Documentation CD or the HP website (http://www.hp.com/go/bladesystem/documentation)
9	"General diagnosis flowchart (on page 54)"

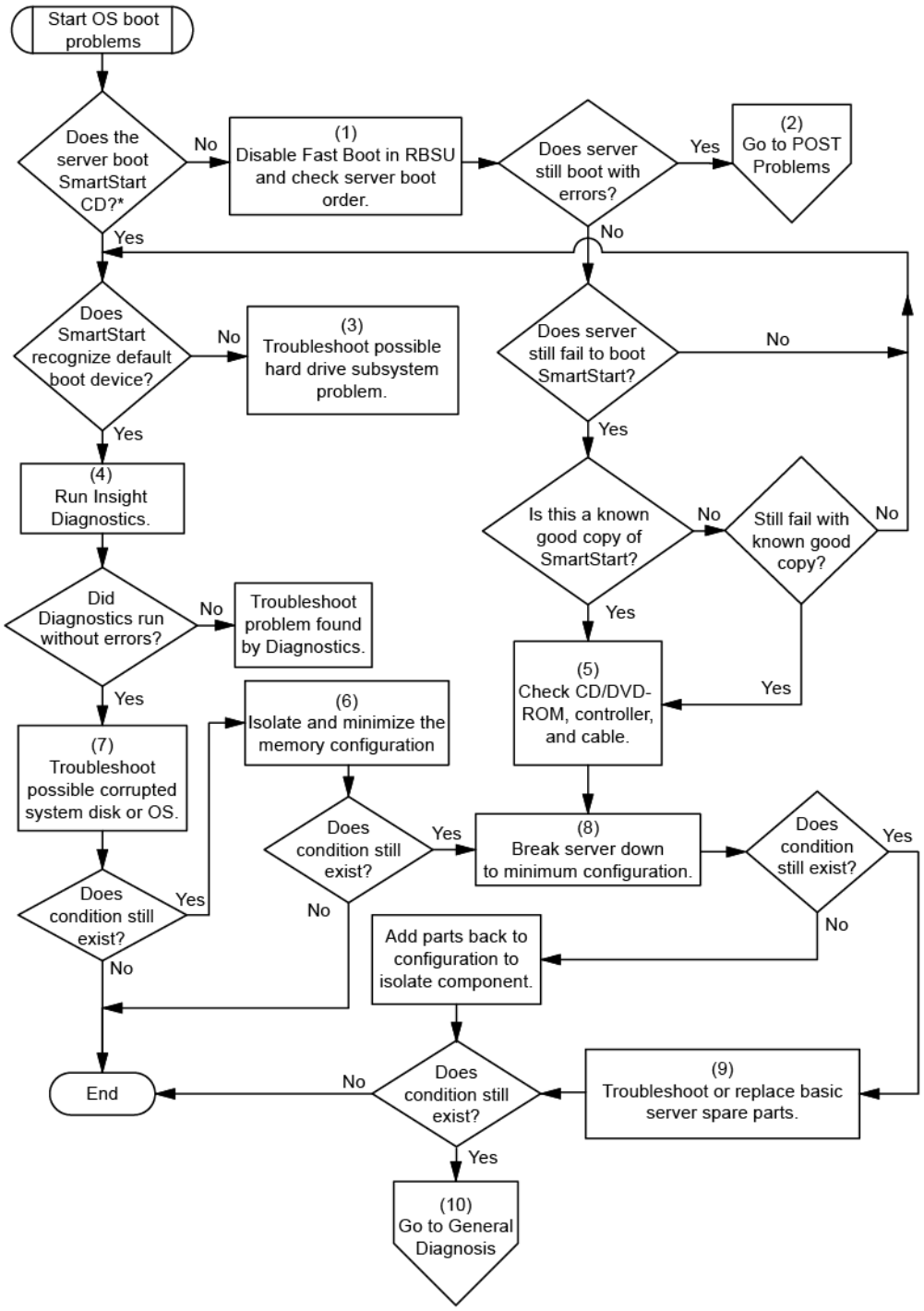

* See the server blade OS boot problems flowchart (on page 60)

Server fault indications flowchart

Symptoms:

- Server boots, but a fault event is reported by Insight Management Agents
- Server boots, but the internal health LED, external health LED, or component health LED is red or amber

NOTE: For the location of server LEDs and information on their statuses, refer to the server documentation.

Possible causes:

- Improperly seated or faulty internal or external component
- Unsupported component installed
- Redundancy failure
- System overtemperature condition

Item	See
1	• "Integrated Management Log (on page 45)" or in the *HP ProLiant Servers Troubleshooting Guide* located on the Documentation CD or see "Troubleshooting resources (on page 48)" • "Event list error messages" in the *HP ProLiant Servers Troubleshooting Guide* located on the Documentation CD or see "Troubleshooting resources (on page 48)"
2	"Component identification (on page 6)"
3	System Management Homepage (https://localhost:2381)
4	"Power-on problems flowchart ("Server blade power-on problems flowchart" on page 56)"
5	• "Hardware problems" in the *HP ProLiant Servers Troubleshooting Guide* located on the Documentation CD or see "Troubleshooting resources (on page 48)" • Maintenance and service guides for c-Class server blades, located on the Documentation CD or the HP website (http://www.hp.com/go/bladesystem/documentation) • "HP contact information (on page 70)"
6	• "Hardware problems" in the *HP ProLiant Servers Troubleshooting Guide* located on the Documentation CD or see "Troubleshooting resources (on page 48)" • Maintenance and service guides for c-Class server blades, located on the Documentation CD or the HP website (http://www.hp.com/go/bladesystem/documentation)

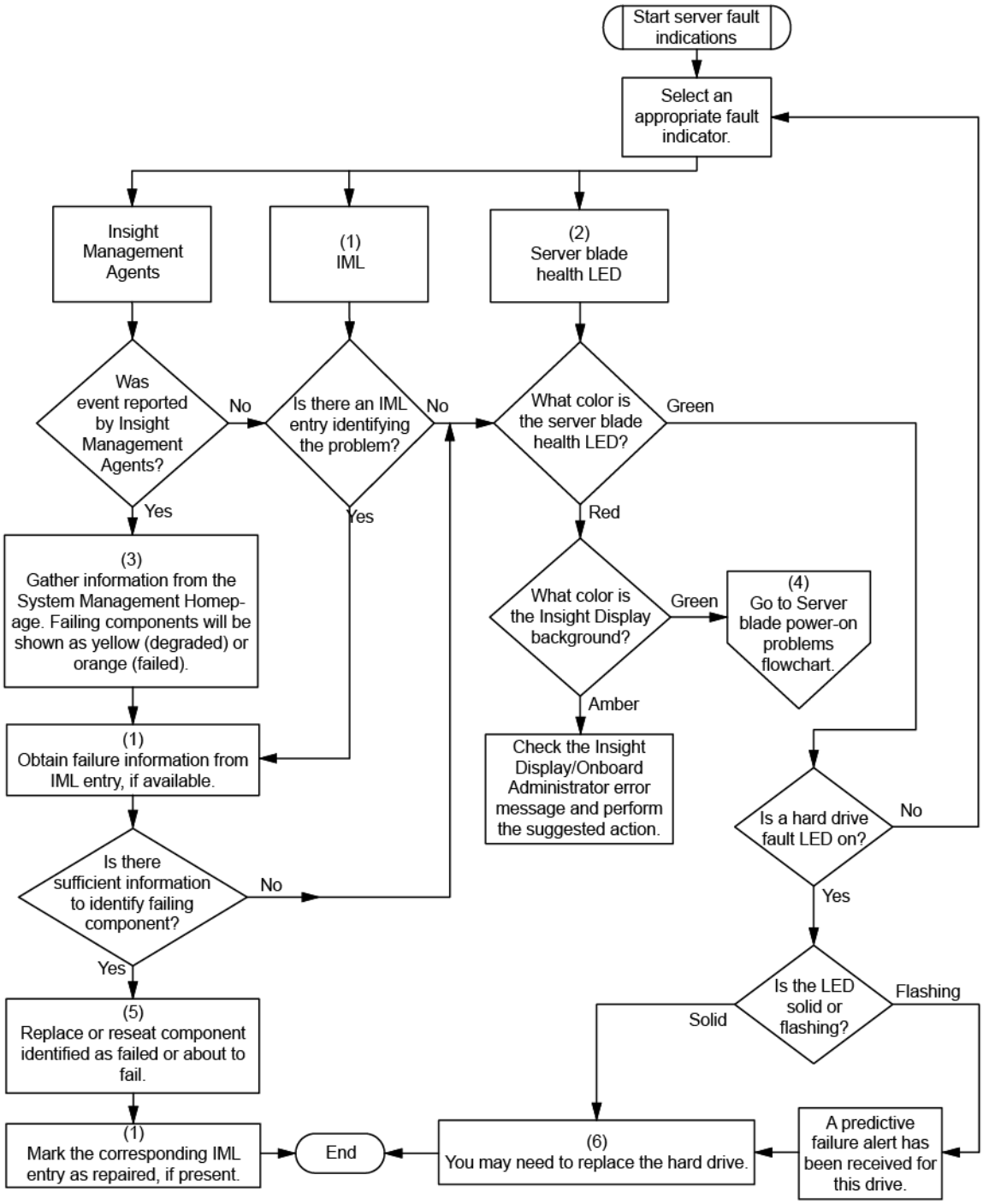
Start server fault indications
Select an appropriate fault indicator.
Insight Management Agents
(1) IML
(2) Server blade health LED
Was event reported by Insight Management Agents?
No
Is there an IML entry identifying the problem?
No
What color is the server blade health LED?
Green
Yes
Yes
Red
(3) Gather information from the System Management Homepage. Failing components will be shown as yellow (degraded) or orange (failed).
What color is the Insight Display background?
Green
(4) Go to Server blade power-on problems flowchart.
Amber
(1) Obtain failure information from IML entry, if available.
Check the Insight Display/Onboard Administrator error message and perform the suggested action.
Is a hard drive fault LED on?
No
Is there sufficient information to identify failing component?
No
Yes
Yes
Is the LED solid or flashing?
Flashing
Solid
(5) Replace or reseat component identified as failed or about to fail.
(1) Mark the corresponding IML entry as repaired, if present.
End
(6) You may need to replace the hard drive.
A predictive failure alert has been received for this drive.

POST error messages and beep codes

For a complete listing of error messages, refer to the "POST error messages" in the *HP ProLiant Servers Troubleshooting Guide* located on the Documentation CD or on the HP website (http://www.hp.com/support).

⚠ **WARNING:** To avoid potential problems, ALWAYS read the warnings and cautionary information in the server documentation before removing, replacing, reseating, or modifying system components.

System battery

If the server no longer automatically displays the correct date and time, you might have to replace the battery that provides power to the real-time clock. Under normal use, battery life is 5 to 10 years.

WARNING: The computer contains an internal lithium manganese dioxide, a vanadium pentoxide, or an alkaline battery pack. A risk of fire and burns exists if the battery pack is not properly handled. To reduce the risk of personal injury:

- Do not attempt to recharge the battery.
- Do not expose the battery to temperatures higher than 60°C (140°F).
- Do not disassemble, crush, puncture, short external contacts, or dispose of in fire or water.
- Replace only with the spare designated for this product.

To remove the component:

1. Power down the server (on page 17).
2. Disconnect all peripheral cables from the server.
3. Remove the server from the chassis ("Removing the server from the chassis" on page 17).
4. If installed, remove the PCI riser board assembly.
5. Locate the battery on the system board.
6. Remove the battery.

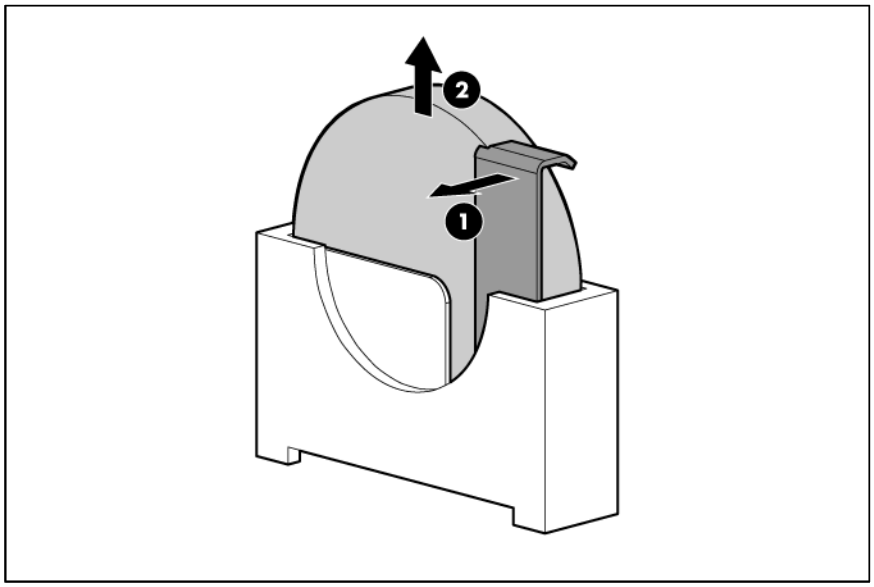

IMPORTANT: Replacing the system board battery resets the system ROM to its default configuration. After replacing the battery, reconfigure the system through RBSU.

To replace the component, reverse the removal procedure.

For more information about battery replacement or proper disposal, contact an authorized reseller or an authorized service provider.

Regulatory information

Safety and regulatory compliance

For safety, environmental, and regulatory information, see *Safety and Compliance Information for Server, Storage, Power, Networking, and Rack Products*, available at the HP website (http://www.hp.com/support/Safety-Compliance-EnterpriseProducts).

Turkey RoHS material content declaration

Türkiye Cumhuriyeti: EEE Yönetmeliğine Uygundur

Ukraine RoHS material content declaration

Обладнання відповідає вимогам Технічного регламенту щодо обмеження використання деяких небезпечних речовин в електричному та електронному обладнанні, затвердженого постановою Кабінету Міністрів України від 3 грудня 2008 № 1057

Warranty information

HP ProLiant and X86 Servers and Options (http://www.hp.com/support/ProLiantServers-Warranties)

HP Enterprise Servers (http://www.hp.com/support/EnterpriseServers-Warranties)

HP Storage Products (http://www.hp.com/support/Storage-Warranties)

HP Networking Products (http://www.hp.com/support/Networking-Warranties)

Electrostatic discharge

Preventing electrostatic discharge

To prevent damaging the system, be aware of the precautions you need to follow when setting up the system or handling parts. A discharge of static electricity from a finger or other conductor may damage system boards or other static-sensitive devices. This type of damage may reduce the life expectancy of the device.

To prevent electrostatic damage:

- Avoid hand contact by transporting and storing products in static-safe containers.
- Keep electrostatic-sensitive parts in their containers until they arrive at static-free workstations.
- Place parts on a grounded surface before removing them from their containers.
- Avoid touching pins, leads, or circuitry.
- Always be properly grounded when touching a static-sensitive component or assembly.

Grounding methods to prevent electrostatic discharge

Several methods are used for grounding. Use one or more of the following methods when handling or installing electrostatic-sensitive parts:

- Use a wrist strap connected by a ground cord to a grounded workstation or computer chassis. Wrist straps are flexible straps with a minimum of 1 megohm ±10 percent resistance in the ground cords. To provide proper ground, wear the strap snug against the skin.
- Use heel straps, toe straps, or boot straps at standing workstations. Wear the straps on both feet when standing on conductive floors or dissipating floor mats.
- Use conductive field service tools.
- Use a portable field service kit with a folding static-dissipating work mat.

If you do not have any of the suggested equipment for proper grounding, have an authorized reseller install the part.

For more information on static electricity or assistance with product installation, contact an authorized reseller.

Specifications

Environmental specifications

Specification	Value
Temperature range*	
Operating	10°C to 35°C (50°F to 95°F)
Shipping	-30°C to 50°C (-22°F to 122°F)
Storage	-30°C to 60°C (-22°F to 140°F)
Maximum wet bulb temperature	28°C (82.4°F)
Relative humidity (noncondensing)**	
Operating	10% to 90%
Non-operating	5% to 95%

* All temperature ratings shown are for sea level. An altitude derating of 1°C per 300 m (1.8°F per 1,000 ft) to 3048 m (10,000 ft) is applicable. No direct sunlight allowed.
** Storage maximum humidity of 95% is based on a maximum temperature of 45°C (113°F). Altitude maximum for storage corresponds to a pressure minimum of 70 KPa.

Server specifications

Specification	Value
Dimensions	
Height	17.68 cm (6.96 in)
Depth	89.71 cm (35.32 in)
Width	44.81 cm (17.64 in)
Weight (single server)	20.87 kg (46 lb)
Weight (two servers in chassis)	64.73 kg (142.7 lb)
Input requirements	
Rated input voltage	90–140 VAC 180–264 VAC
Rated input frequency	47–63 Hz
Rated input current	7.31 A at 115 VAC 3.6 A at 230 VAC
Rated input power	855 W at 100 VAC input 840.72 W at 200 VAC input
Btus per hour	N/A
Power supply output	
Rated steady-state power	750 W at 100 VAC input 1200 W at 200–240 VAC input

System input requirements information is based on measurements with hardware available at the time of publishing this document. For updated information, see the HP website (http://www.hp.com/go/hppoweradvisor).

Support and other resources

Before you contact HP

Be sure to have the following information available before you call HP:

- Active Health System log (HP ProLiant Gen8 or later products)

  Download and have available an Active Health System log for 3 days before the failure was detected. For more information, see the *HP iLO 4 User Guide* or *HP Intelligent Provisioning User Guide* on the HP website (http://www.hp.com/go/ilo/docs).
- Onboard Administrator SHOW ALL report (for HP BladeSystem products only)

  For more information on obtaining the Onboard Administrator SHOW ALL report, see the HP website (http://www.hp.com/go/OAlog).
- Technical support registration number (if applicable)
- Product serial number
- Product model name and number
- Product identification number
- Applicable error messages
- Add-on boards or hardware
- Third-party hardware or software
- Operating system type and revision level

HP contact information

For United States and worldwide contact information, see the Contact HP website (http://www.hp.com/go/assistance).

In the United States:

- To contact HP by phone, call 1-800-334-5144. For continuous quality improvement, calls may be recorded or monitored.
- If you have purchased a Care Pack (service upgrade), see the Support & Drivers website (http://www8.hp.com/us/en/support-drivers.html). If the problem cannot be resolved at the website, call 1-800-633-3600. For more information about Care Packs, see the HP website (http://pro-aq-sama.houston.hp.com/services/cache/10950-0-0-225-121.html).

Customer Self Repair

HP products are designed with many Customer Self Repair (CSR) parts to minimize repair time and allow for greater flexibility in performing defective parts replacement. If during the diagnosis period HP (or HP service

providers or service partners) identifies that the repair can be accomplished by the use of a CSR part, HP will ship that part directly to you for replacement. There are two categories of CSR parts:

- **Mandatory**—Parts for which customer self repair is mandatory. If you request HP to replace these parts, you will be charged for the travel and labor costs of this service.
- **Optional**—Parts for which customer self repair is optional. These parts are also designed for customer self repair. If, however, you require that HP replace them for you, there may or may not be additional charges, depending on the type of warranty service designated for your product.

NOTE: Some HP parts are not designed for customer self repair. In order to satisfy the customer warranty, HP requires that an authorized service provider replace the part. These parts are identified as "No" in the Illustrated Parts Catalog.

Based on availability and where geography permits, CSR parts will be shipped for next business day delivery. Same day or four-hour delivery may be offered at an additional charge where geography permits. If assistance is required, you can call the HP Technical Support Center and a technician will help you over the telephone. HP specifies in the materials shipped with a replacement CSR part whether a defective part must be returned to HP. In cases where it is required to return the defective part to HP, you must ship the defective part back to HP within a defined period of time, normally five (5) business days. The defective part must be returned with the associated documentation in the provided shipping material. Failure to return the defective part may result in HP billing you for the replacement. With a customer self repair, HP will pay all shipping and part return costs and determine the courier/carrier to be used.

For more information about HP's Customer Self Repair program, contact your local service provider. For the North American program, refer to the HP website (http://www.hp.com/go/selfrepair).

Réparation par le client (CSR)

Les produits HP comportent de nombreuses pièces CSR (Customer Self Repair = réparation par le client) afin de minimiser les délais de réparation et faciliter le remplacement des pièces défectueuses. Si pendant la période de diagnostic, HP (ou ses partenaires ou mainteneurs agréés) détermine que la réparation peut être effectuée à l'aide d'une pièce CSR, HP vous l'envoie directement. Il existe deux catégories de pièces CSR:

Obligatoire - Pièces pour lesquelles la réparation par le client est obligatoire. Si vous demandez à HP de remplacer ces pièces, les coûts de déplacement et main d'œuvre du service vous seront facturés.

Facultatif - Pièces pour lesquelles la réparation par le client est facultative. Ces pièces sont également conçues pour permettre au client d'effectuer lui-même la réparation. Toutefois, si vous demandez à HP de remplacer ces pièces, l'intervention peut ou non vous être facturée, selon le type de garantie applicable à votre produit.

REMARQUE: Certaines pièces HP ne sont pas conçues pour permettre au client d'effectuer lui-même la réparation. Pour que la garantie puisse s'appliquer, HP exige que le remplacement de la pièce soit effectué par un Mainteneur Agréé. Ces pièces sont identifiées par la mention "Non" dans le Catalogue illustré.

Les pièces CSR sont livrées le jour ouvré suivant, dans la limite des stocks disponibles et selon votre situation géographique. Si votre situation géographique le permet et que vous demandez une livraison le jour même ou dans les 4 heures, celle-ci vous sera facturée. Pour bénéficier d'une assistance téléphonique, appelez le Centre d'assistance technique HP. Dans les documents envoyés avec la pièce de rechange CSR, HP précise s'il est nécessaire de lui retourner la pièce défectueuse. Si c'est le cas, vous devez le faire dans le délai indiqué, généralement cinq (5) jours ouvrés. La pièce et sa documentation doivent être retournées dans l'emballage fourni. Si vous ne retournez pas la pièce défectueuse, HP se réserve le droit de vous facturer les coûts de remplacement. Dans le cas d'une pièce CSR, HP supporte l'ensemble des frais d'expédition et de retour, et détermine la société de courses ou le transporteur à utiliser.

Pour plus d'informations sur le programme CSR de HP, contactez votre Mainteneur Agrée local. Pour plus d'informations sur ce programme en Amérique du Nord, consultez le site Web HP (http://www.hp.com/go/selfrepair).

Riparazione da parte del cliente

Per abbreviare i tempi di riparazione e garantire una maggiore flessibilità nella sostituzione di parti difettose, i prodotti HP sono realizzati con numerosi componenti che possono essere riparati direttamente dal cliente (CSR, Customer Self Repair). Se in fase di diagnostica HP (o un centro di servizi o di assistenza HP) identifica il guasto come riparabile mediante un ricambio CSR, HP lo spedirà direttamente al cliente per la sostituzione. Vi sono due categorie di parti CSR:

Obbligatorie – Parti che devono essere necessariamente riparate dal cliente. Se il cliente ne affida la riparazione ad HP, deve sostenere le spese di spedizione e di manodopera per il servizio.

Opzionali – Parti la cui riparazione da parte del cliente è facoltativa. Si tratta comunque di componenti progettati per questo scopo. Se tuttavia il cliente ne richiede la sostituzione ad HP, potrebbe dover sostenere spese addizionali a seconda del tipo di garanzia previsto per il prodotto.

NOTA: alcuni componenti HP non sono progettati per la riparazione da parte del cliente. Per rispettare la garanzia, HP richiede che queste parti siano sostituite da un centro di assistenza autorizzato. Tali parti sono identificate da un "No" nel Catalogo illustrato dei componenti.

In base alla disponibilità e alla località geografica, le parti CSR vengono spedite con consegna entro il giorno lavorativo seguente. La consegna nel giorno stesso o entro quattro ore è offerta con un supplemento di costo solo in alcune zone. In caso di necessità si può richiedere l'assistenza telefonica di un addetto del centro di supporto tecnico HP. Nel materiale fornito con una parte di ricambio CSR, HP specifica se il cliente deve restituire dei componenti. Qualora sia richiesta la resa ad HP del componente difettoso, lo si deve spedire ad HP entro un determinato periodo di tempo, generalmente cinque (5) giorni lavorativi. Il componente difettoso deve essere restituito con la documentazione associata nell'imballo di spedizione fornito. La mancata restituzione del componente può comportare la fatturazione del ricambio da parte di HP. Nel caso di riparazione da parte del cliente, HP sostiene tutte le spese di spedizione e resa e sceglie il corriere/vettore da utilizzare.

Per ulteriori informazioni sul programma CSR di HP contattare il centro di assistenza di zona. Per il programma in Nord America fare riferimento al sito Web HP (http://www.hp.com/go/selfrepair).

Customer Self Repair

HP Produkte enthalten viele CSR-Teile (Customer Self Repair), um Reparaturzeiten zu minimieren und höhere Flexibilität beim Austausch defekter Bauteile zu ermöglichen. Wenn HP (oder ein HP Servicepartner) bei der Diagnose feststellt, dass das Produkt mithilfe eines CSR-Teils repariert werden kann, sendet Ihnen HP dieses Bauteil zum Austausch direkt zu. CSR-Teile werden in zwei Kategorien unterteilt:

Zwingend – Teile, für die das Customer Self Repair-Verfahren zwingend vorgegeben ist. Wenn Sie den Austausch dieser Teile von HP vornehmen lassen, werden Ihnen die Anfahrt- und Arbeitskosten für diesen Service berechnet.

Optional – Teile, für die das Customer Self Repair-Verfahren optional ist. Diese Teile sind auch für Customer Self Repair ausgelegt. Wenn Sie jedoch den Austausch dieser Teile von HP vornehmen lassen möchten, können bei diesem Service je nach den für Ihr Produkt vorgesehenen Garantiebedingungen zusätzliche Kosten anfallen.

HINWEIS: Einige Teile sind nicht für Customer Self Repair ausgelegt. Um den Garantieanspruch des Kunden zu erfüllen, muss das Teil von einem HP Servicepartner ersetzt werden. Im illustrierten Teilekatalog sind diese Teile mit „No“ bzw. „Nein“ gekennzeichnet.

CSR-Teile werden abhängig von der Verfügbarkeit und vom Lieferziel am folgenden Geschäftstag geliefert. Für bestimmte Standorte ist eine Lieferung am selben Tag oder innerhalb von vier Stunden gegen einen Aufpreis verfügbar. Wenn Sie Hilfe benötigen, können Sie das HP technische Support Center anrufen und sich von einem Mitarbeiter per Telefon helfen lassen. Den Materialien, die mit einem CSR-Ersatzteil geliefert werden, können Sie entnehmen, ob das defekte Teil an HP zurückgeschickt werden muss. Wenn es erforderlich ist, das defekte Teil an HP zurückzuschicken, müssen Sie dies innerhalb eines vorgegebenen Zeitraums tun, in der Regel innerhalb von fünf (5) Geschäftstagen. Das defekte Teil muss mit der zugehörigen Dokumentation in der Verpackung zurückgeschickt werden, die im Lieferumfang enthalten ist. Wenn Sie das defekte Teil nicht zurückschicken, kann HP Ihnen das Ersatzteil in Rechnung stellen. Im Falle von Customer Self Repair kommt HP für alle Kosten für die Lieferung und Rücksendung auf und bestimmt den Kurier-/Frachtdienst.

Weitere Informationen über das HP Customer Self Repair Programm erhalten Sie von Ihrem Servicepartner vor Ort. Informationen über das CSR-Programm in Nordamerika finden Sie auf der HP Website unter (http://www.hp.com/go/selfrepair).

Reparaciones del propio cliente

Los productos de HP incluyen muchos componentes que el propio usuario puede reemplazar (*Customer Self Repair*, CSR) para minimizar el tiempo de reparación y ofrecer una mayor flexibilidad a la hora de realizar sustituciones de componentes defectuosos. Si, durante la fase de diagnóstico, HP (o los proveedores o socios de servicio de HP) identifica que una reparación puede llevarse a cabo mediante el uso de un componente CSR, HP le enviará dicho componente directamente para que realice su sustitución. Los componentes CSR se clasifican en dos categorías:

- **Obligatorio:** componentes para los que la reparación por parte del usuario es obligatoria. Si solicita a HP que realice la sustitución de estos componentes, tendrá que hacerse cargo de los gastos de desplazamiento y de mano de obra de dicho servicio.
- **Opcional:** componentes para los que la reparación por parte del usuario es opcional. Estos componentes también están diseñados para que puedan ser reparados por el usuario. Sin embargo, si precisa que HP realice su sustitución, puede o no conllevar costes adicionales, dependiendo del tipo de servicio de garantía correspondiente al producto.

NOTA: Algunos componentes no están diseñados para que puedan ser reparados por el usuario. Para que el usuario haga valer su garantía, HP pone como condición que un proveedor de servicios autorizado realice la sustitución de estos componentes. Dichos componentes se identifican con la palabra "No" en el catálogo ilustrado de componentes.

Según la disponibilidad y la situación geográfica, los componentes CSR se enviarán para que lleguen a su destino al siguiente día laborable. Si la situación geográfica lo permite, se puede solicitar la entrega en el mismo día o en cuatro horas con un coste adicional. Si precisa asistencia técnica, puede llamar al Centro de asistencia técnica de HP y recibirá ayuda telefónica por parte de un técnico. Con el envío de materiales para la sustitución de componentes CSR, HP especificará si los componentes defectuosos deberán devolverse a HP. En aquellos casos en los que sea necesario devolver algún componente a HP, deberá hacerlo en el periodo de tiempo especificado, normalmente cinco días laborables. Los componentes defectuosos deberán devolverse con toda la documentación relacionada y con el embalaje de envío. Si no enviara el componente defectuoso requerido, HP podrá cobrarle por el de sustitución. En el caso de todas

sustituciones que lleve a cabo el cliente, HP se hará cargo de todos los gastos de envío y devolución de componentes y escogerá la empresa de transporte que se utilice para dicho servicio.

Para obtener más información acerca del programa de Reparaciones del propio cliente de HP, póngase en contacto con su proveedor de servicios local. Si está interesado en el programa para Norteamérica, visite la página web de HP siguiente (http://www.hp.com/go/selfrepair).

Customer Self Repair

Veel onderdelen in HP producten zijn door de klant zelf te repareren, waardoor de reparatieduur tot een minimum beperkt kan blijven en de flexibiliteit in het vervangen van defecte onderdelen groter is. Deze onderdelen worden CSR-onderdelen (Customer Self Repair) genoemd. Als HP (of een HP Service Partner) bij de diagnose vaststelt dat de reparatie kan worden uitgevoerd met een CSR-onderdeel, verzendt HP dat onderdeel rechtstreeks naar u, zodat u het defecte onderdeel daarmee kunt vervangen. Er zijn twee categorieën CSR-onderdelen:

Verplicht: Onderdelen waarvoor reparatie door de klant verplicht is. Als u HP verzoekt deze onderdelen voor u te vervangen, worden u voor deze service reiskosten en arbeidsloon in rekening gebracht.

Optioneel: Onderdelen waarvoor reparatie door de klant optioneel is. Ook deze onderdelen zijn ontworpen voor reparatie door de klant. Als u echter HP verzoekt deze onderdelen voor u te vervangen, kunnen daarvoor extra kosten in rekening worden gebracht, afhankelijk van het type garantieservice voor het product.

OPMERKING: Sommige HP onderdelen zijn niet ontwikkeld voor reparatie door de klant. In verband met de garantievoorwaarden moet het onderdeel door een geautoriseerde Service Partner worden vervangen. Deze onderdelen worden in de geïllustreerde onderdelencatalogus aangemerkt met "Nee".

Afhankelijk van de leverbaarheid en de locatie worden CSR-onderdelen verzonden voor levering op de eerstvolgende werkdag. Levering op dezelfde dag of binnen vier uur kan tegen meerkosten worden aangeboden, indien dit mogelijk is gezien de locatie. Indien assistentie gewenst is, belt u een HP Service Partner om via de telefoon technische ondersteuning te ontvangen. HP vermeldt in de documentatie bij het vervangende CSR-onderdeel of het defecte onderdeel aan HP moet worden geretourneerd. Als het defecte onderdeel aan HP moet worden teruggezonden, moet u het defecte onderdeel binnen een bepaalde periode, gewoonlijk vijf (5) werkdagen, retourneren aan HP. Het defecte onderdeel moet met de bijbehorende documentatie worden geretourneerd in het meegeleverde verpakkingsmateriaal. Als u het defecte onderdeel niet terugzendt, kan HP u voor het vervangende onderdeel kosten in rekening brengen. Bij reparatie door de klant betaalt HP alle verzendkosten voor het vervangende en geretourneerde onderdeel en kiest HP zelf welke koerier/transportonderneming hiervoor wordt gebruikt.

Neem contact op met een Service Partner voor meer informatie over het Customer Self Repair programma van HP. Informatie over Service Partners vindt u op de HP website (http://www.hp.com/go/selfrepair).

Reparo feito pelo cliente

Os produtos da HP são projetados com muitas peças para reparo feito pelo cliente (CSR) de modo a minimizar o tempo de reparo e permitir maior flexibilidade na substituição de peças com defeito. Se, durante o período de diagnóstico, a HP (ou fornecedores/parceiros de serviço da HP) concluir que o reparo pode ser efetuado pelo uso de uma peça CSR, a peça de reposição será enviada diretamente ao cliente. Existem duas categorias de peças CSR:

Obrigatória – Peças cujo reparo feito pelo cliente é obrigatório. Se desejar que a HP substitua essas peças, serão cobradas as despesas de transporte e mão-de-obra do serviço.

Opcional – Peças cujo reparo feito pelo cliente é opcional. Essas peças também são projetadas para o reparo feito pelo cliente. No entanto, se desejar que a HP as substitua, pode haver ou não a cobrança de taxa adicional, dependendo do tipo de serviço de garantia destinado ao produto.

OBSERVAÇÃO: Algumas peças da HP não são projetadas para o reparo feito pelo cliente. A fim de cumprir a garantia do cliente, a HP exige que um técnico autorizado substitua a peça. Essas peças estão identificadas com a marca "No" (Não), no catálogo de peças ilustrado.

Conforme a disponibilidade e o local geográfico, as peças CSR serão enviadas no primeiro dia útil após o pedido. Onde as condições geográficas permitirem, a entrega no mesmo dia ou em quatro horas pode ser feita mediante uma taxa adicional. Se precisar de auxílio, entre em contato com o Centro de suporte técnico da HP para que um técnico o ajude por telefone. A HP especifica nos materiais fornecidos com a peça CSR de reposição se a peça com defeito deve ser devolvida à HP. Nos casos em que isso for necessário, é preciso enviar a peça com defeito à HP dentro do período determinado, normalmente cinco (5) dias úteis. A peça com defeito deve ser enviada com a documentação correspondente no material de transporte fornecido. Caso não o faça, a HP poderá cobrar a reposição. Para as peças de reparo feito pelo cliente, a HP paga todas as despesas de transporte e de devolução da peça e determina a transportadora/serviço postal a ser utilizado.

Para obter mais informações sobre o programa de reparo feito pelo cliente da HP, entre em contato com o fornecedor de serviços local. Para o programa norte-americano, visite o site da HP (http://www.hp.com/go/selfrepair).

カスタマーセルフリペア

修理時間を短縮し、故障部品の交換における高い柔軟性を確保するために、HP製品には多数のCSR部品があります。診断の際に、CSR部品を使用すれば修理ができるとHP（HPまたはHP正規保守代理店）が判断した場合、HPはその部品を直接、お客様に発送し、お客様に交換していただきます。CSR部品には以下の2通りがあります。

- **必須 -** カスタマーセルフリペアが必須の部品。当該部品について、もしもお客様がHPに交換作業を依頼される場合には、その修理サービスに関する交通費および人件費がお客様に請求されます。
- **任意 -** カスタマーセルフリペアが任意である部品。この部品もカスタマーセルフリペア用です。当該部品について、もしもお客様がHPに交換作業を依頼される場合には、お買い上げの製品に適用される保証サービス内容の範囲内においては、別途費用を負担していただくことなく保証サービスを受けることができます。

注： HP製品の一部の部品は、カスタマーセルフリペア用ではありません。製品の保証を継続するためには、HPまたはHP正規保守代理店による交換作業が必須となります。部品カタログには、当該部品がカスタマーセルフリペア除外品である旨が記載されています。

部品供給が可能な場合、地域によっては、CSR部品を翌営業日に届くように発送します。また、地域によっては、追加費用を負担いただくことにより同日または4時間以内に届くように発送することも可能な場合があります。サポートが必要なときは、HPの修理受付窓口に電話していただければ、技術者が電話でアドバイスします。交換用のCSR部品または同梱物には、故障部品をHPに返送する必要があるかどうかが表示されています。故障部品をHPに返送する必要がある場合は、指定期限内（通常は5営業日以内）に故障部品をHPに返送してください。故障部品を返送する場合は、届いた時の梱包箱に関連書類とともに入れてください。故障部品を返送しない場合、HPから部品費用が請求されます。カスタマーセルフリペアの際には、HPは送料および部品返送費を全額負担し、使用する宅配便会社や運送会社を指定します。

客户自行维修

HP 产品提供许多客户自行维修 (CSR) 部件，以尽可能缩短维修时间和在更换缺陷部件方面提供更大的灵活性。如果在诊断期间 HP（或 HP 服务提供商或服务合作伙伴）确定可以通过使用 CSR 部件完成维修，HP 将直接把该部件发送给您进行更换。有两类 CSR 部件：

- **强制性的** — 要求客户必须自行维修的部件。如果您请求 HP 更换这些部件，则必须为该服务支付差旅费和人工费用。
- **可选的** — 客户可以选择是否自行维修的部件。这些部件也是为客户自行维修设计的。不过，如果您要求 HP 为您更换这些部件，则根据为您的产品指定的保修服务类型，HP 可能收取或不再收取任何附加费用。

注：某些 HP 部件的设计并未考虑客户自行维修。为了满足客户保修的需要，HP 要求授权服务提供商更换相关部件。这些部件在部件图解目录中标记为“否”。

CSR 部件将在下一个工作日发运（取决于备货情况和允许的地理范围）。在允许的地理范围内，可在当天或四小时内发运，但要收取额外费用。如果需要帮助，您可以致电 HP 技术支持中心，将会有技术人员通过电话为您提供帮助。HP 会在随更换的 CSR 部件发运的材料中指明是否必须将有缺陷的部件返还给 HP。如果要求您将有缺陷的部件返还给 HP，那么您必须在规定期限内（通常是五 (5) 个工作日）将缺陷部件发给 HP。有缺陷的部件必须随所提供的发运材料中的相关文件一起返还。如果未能送还有缺陷的部件，HP 可能会要求您支付更换费用。客户自行维修时，HP 将承担所有相关运输和部件返回费用，并指定快递商/承运商。

有关 HP 客户自行维修计划的详细信息，请与您当地的服务提供商联系。有关北美地区的计划，请访问 HP 网站 (http://www.hp.com/go/selfrepair)。

客戶自行維修

HP 產品設計了許多「客戶自行維修」(CSR) 的零件以減少維修時間，並且使得更換瑕疵零件時能有更大的彈性。如果在診斷期間 HP（或 HP 服務供應商或維修夥伴）辨認出此項維修工作可以藉由使用 CSR 零件來完成，則 HP 將直接寄送該零件給您作更換。CSR 零件分為兩種類別：

- **強制的** — 客戶自行維修所使用的零件是強制性的。如果您要求 HP 更換這些零件，HP 將會向您收取此服務所需的外出費用與勞動成本。
- **選購的** — 客戶自行維修所使用的零件是選購的。這些零件也設計用於客戶自行維修之用。不過，如果您要求 HP 為您更換，則可能需要也可能不需要負擔額外的費用，端視針對此產品指定的保固服務類型而定。

備註：某些 HP 零件沒有消費者可自行維修的設計。為符合客戶保固，HP 需要授權的服務供應商更換零件。這些零件在圖示的零件目錄中，被標示為「否」。

基於材料取得及環境允許的情況下，CSR 零件將於下一個工作日以快遞寄送。在環境的允許下當天或四小時內送達，則可能需要額外的費用。若您需要協助，可致電「HP 技術支援中心」，會有一位技術人員透過電話來協助您。不論損壞的零件是否必須退回，HP 皆會在與 CSR 替換零件一起運送的材料中註明。若要將損壞的零件退回 HP，您必須在指定的一段時間內（通常為五 (5) 個工作天），將損壞的零件寄回 HP。損壞的零件必須與寄送資料中隨附的相關技術文件一併退還。如果無法退還損壞的零件，HP 可能要向您收取替換費用。針對客戶自行維修情形，HP 將負責所有運費及零件退還費用並指定使用何家快遞/貨運公司。

如需 HP 的「客戶自行維修」方案詳細資訊，請連絡您當地的服務供應商。至於北美方案，請參閱 HP 網站 (http://www.hp.com/go/selfrepair)。

고객 셀프 수리

HP 제품은 수리 시간을 최소화하고 결함이 있는 부품 교체 시 더욱 융통성을 발휘할 수 있도록 하기 위해 고객 셀프 수리(CSR) 부품을 다량 사용하여 설계되었습니다. 진단 기간 동안 HP(또는 HP 서비스 공급업체 또는 서비스 협력업체)에서 CSR 부품을 사용하여 수리가 가능하다고 판단되면 HP는 해당 부품을 바로 사용자에게 보내어 사용자가 교체할 수 있도록 합니다. CSR 부품에는 두 가지 종류가 있습니다.

- **고객 셀프 수리가 의무 사항인 필수 부품.** 사용자가 HP에 이 부품의 교체를 요청할 경우 이 서비스에 대한 출장비 및 작업비가 청구됩니다.
- **고객 셀프 수리가 선택 사항인 부품.** 이 부품들도 고객 셀프 수리가 가능하도록 설계되었습니다. 하지만 사용자가 HP에 이 부품의 교체를 요청할 경우 사용자가 구입한 제품에 해당하는 보증 서비스 유형에 따라 추가 비용 없이 교체가 가능할 수 있습니다.

참고: 일부 HP 부품은 고객 셀프 수리가 불가능하도록 설계되었습니다. HP는 만족스러운 고객 보증을 위해 공인 서비스 제공업체를 통해 부품을 교체하도록 하고 있습니다. 이러한 부품들은 Illustrated Parts Catalog에 "No"라고 표시되어 있습니다.

CSR 부품은 재고 상태와 지리적 조건이 허용하는 경우 다음 영업일 납품이 가능하도록 배송이 이루어집니다. 지리적 조건이 허용하는 경우 추가 비용이 청구되는 조건으로 당일 또는 4시간 배송이 가능할 수도 있습니다. 도움이 필요하시면 HP 기술 지원 센터로 전화하십시오. 전문 기술자가 전화로 도움을 줄 것입니다. HP는 결함이 발생한 부품을 HP로 반환해야 하는지 여부를 CSR 교체 부품과 함께 배송된 자료에 지정합니다. 결함이 발생한 부품을 HP로 반환해야 하는 경우에는 지정된 기간 내(통상 영업일 기준 5일)에 HP로 반환해야 합니다. 이 때 결함이 발생한 부품은 제공된 포장 재료에 넣어 관련 설명서와 함께 반환해야 합니다. 결함이 발생한 부품을 반환하지 않는 경우 HP가 교체 부품에 대해 비용을 청구할 수 있습니다. 고객 셀프 수리의 경우, HP는 모든 운송 및 부품 반환 비용을 부담하며 이용할 운송업체 및 택배 서비스를 결정합니다.

HP 고객 셀프 수리 프로그램에 대한 자세한 내용은 가까운 서비스 제공업체에 문의하십시오. 북미 지역의 프로그램에 대해서는 HP 웹 사이트(http://www.hp.com/go/selfrepair)를 참조하십시오.

Acronyms and abbreviations

ABEND

abnormal end

ACU

Array Configuration Utility

ASR

Automatic Server Recovery

BBWC

battery-backed write cache

CONREP

Configuration Replication utility

CSA

Canadian Standards Association

CSR

Customer Self Repair

DDR3

double data rate-3

GPU

graphics processing unit

HP SIM

HP Systems Insight Manager

iLO

Integrated Lights-Out

IML

Integrated Management Log

KVM

keyboard, video, and mouse

NMI

nonmaskable interrupt

NVRAM

nonvolatile memory

ORCA

Option ROM Configuration for Arrays

PCIe

Peripheral Component Interconnect Express

PCI-X

peripheral component interconnect extended

PDU

power distribution unit

POST

Power-On Self Test

PXE

preboot execution environment

QPI

QuickPath Interconnect

QSFP

quad small form-factor pluggable

RBSU

ROM-Based Setup Utility

RDIMM

registered dual in-line memory module

RDP

Rapid Deployment Pack

RoHS

Restriction of Hazardous Substances

RPS

redundant power supply

SAS

serial attached SCSI

SATA

serial ATA

SFF

small form factor

SFP

small form-factor pluggable

SFP+

enhanced small form-factor pluggable

SLAPM

SL Advanced Power Manager

SSD

solid-state drive

TMRA

recommended ambient operating temperature

UDIMM

unregistered dual in-line memory module

UID

unit identification

USB

universal serial bus

VCA

Version Control Agent

VRD

Voltage Regulator Down

Documentation feedback

HP is committed to providing documentation that meets your needs. To help us improve the documentation, send any errors, suggestions, or comments to Documentation Feedback (mailto:docsfeedback@hp.com). Include the document title and part number, version number, or the URL when submitting your feedback.

Index

A

ACU (Array Configuration Utility) 40
additional information 48
airflow requirements 19, 20
Altiris Deployment Solution 41
Array Configuration Utility (ACU) 40
ASR (Automatic Server Recovery) 42
authorized reseller 70
auto-configuration process 39
Automatic Server Recovery (ASR) 42

B

battery 37, 66
battery pack LEDs 13
battery-backed write cache battery pack 37
BIOS Serial Console 40
BIOS upgrade 42
boot options 40
buttons 6, 7, 8, 9, 10

C

cable management arm 22
cables 37, 52
cabling 37
Care Pack 47
Change Control 47
components 6
components, identification 6, 7, 9, 10
components, system board 10
configuration of system 24, 38
Configuration Replication Utility 38
configuration tools 38
connection problems 52
connectors 6
contacting HP 70
creating a disk image 41

D

Declaration of Conformity 67
deployment software 41
diagnosing problems 48, 54
diagnostic tools 39, 41, 42, 45
diagnostics utility 45
DIMMs 11, 32
diskette image creation 41
drivers 46
drives 12, 26
drives, installing 26

E

electrical grounding requirements 21
electrostatic discharge 68
environmental requirements 19
Erase Utility 43
expansion board 33

F

fan module locations 16
fans 8, 9, 16
features 6
flowcharts 53, 54, 56, 58, 60, 62
front panel components 6, 7

G

general diagnosis flowchart 54
GPU location 15
grounding methods 68
grounding requirements 21

H

hardware options 26
hardware options installation 22, 26
health driver 42
health LEDs 52
HP Insight Diagnostics 45
HP ProLiant Essentials Rapid Deployment Pack 41

I

iLO (Integrated Lights-Out) 43
IML (Integrated Management Log) 45
Important Safety Information document 48
Insight Diagnostics 45, 46

installation, server options 22, 26
installing hardware 26
installing operating system 24
Integrated Lights-Out (iLO) 43
Integrated Management Log (IML) 45

L

LED, iLO 2 activity 7
LED, iLO 2 link 7
LED, internal health 7
LED, system power 7
LEDs 9
LEDs, battery pack 13
LEDs, NIC 7
LEDs, troubleshooting 48
LEDs, unit identification (UID) 7
loose connections 52

M

management tools 42
memory 11, 32
memory, configuration requirements 32
memory, mirrored 40
mirrored memory 40

N

NMI functionality 12

O

operating systems 24, 47
operations 17
optimum environment 19
Option ROM Configuration for Arrays (ORCA) 41
options installation 22, 26
ORCA (Option ROM Configuration for Arrays) 41

P

PCI riser board 35
phone numbers 70
power distribution unit (PDU) 21
power LEDs, system 13
Power On button 24
power requirements 21, 69
power supply LEDs 9
powering down 17
powering up 24
power-on problems flowchart 56
preparation procedures 17, 50
problem diagnosis 48
processor 10, 27
processor installation tool 51
ProLiant Support Pack (PSP) 47
PSPs, overview 47

R

rack installation 19, 22
rack mounting hardware 22
rack resources 19
rack warnings 22
RBSU (ROM-Based Setup Utility) 39
RBSU configuration 39
rear components 8
rear panel components 8
rear panel connectors 8
rear panel LEDs 9
redundant ROM 44
registering the server 25
regulatory compliance notices 67
remote support and analysis tools 46
removing server from chassis 17
requirements, airflow 20
requirements, power 21, 69
requirements, space 20
requirements, temperature 20
ROM redundancy 44
ROM-Based Setup Utility (RBSU) 39
ROMPaq utility 42, 44

S

safety considerations 22, 44, 48, 67
safety information 44, 48, 67
scripted installation 38
serial number 42
server fault indications flowchart 62
server features and options 26
server, installation 22
service notifications 52
shipping carton contents 22
SLAPM 8, 43
SmartStart autorun menu 38
SmartStart Scripting Toolkit 38
SmartStart, overview 38
software 38
space requirements 20
specifications 69
start diagnosis flowchart 53
static electricity 68

status lights, battery pack 13
support 46, 70
support packs 38
supported operating systems 47
switches 11
symbols on equipment 49
system battery 66
system board components 10, 11
System Erase Utility 43
system power LED 13

T

technical support 70
telephone numbers 70
temperature requirements 20
troubleshooting 48, 51, 53

U

UID LED 9
updating the system ROM 44
USB support 44
utilities 38
utilities, deployment 38, 39, 41

V

ventilation 19

W

warnings 22, 49