RETIRED: This document has been officially retired, and the base products listed herein are now considered obsolete and are no longer available for sale. Consequently, the information contained within may no longer be current. This document is provided exclusively for reference and informational purposes.

Overview

HP ProLiant SL390s Generation 7 (G7)

The HP ProLiant SL390s G7 server is part of a new family, HP ProLiant SL6500 Scalable System, of HP server solutions optimized for scale-out customers to greatly reduce costs, maximize power efficiency, by sharing power supplies and fans, and maintain total flexibility.

The SL390s G7 consists of three different server trays, each with their own benefits. The 1U half width tray is designed for compute density, and the 2U and 4U half width trays are designed for GPU density, support is up to 3 GPUs in the 2U and 8 GPUs in the 4U tray. They each use the same system board and go into the 4U HP ProLiant s6500 Chassis. The SL390s G7 is a two socket Intel server with 12 DDR3 DIMM sockets, two 1 Gb Ethernet ports, one 10 Gb Ethernet port (SFP+) and an option on board InfiniBand port (QSFP).

The SL390s G7 1U half width server tray support a low profile x16 gen 2 PCI-e slot and two 3.5" or four 2.5" hard drives.
The SL390s G7 2U half width server trays support a low profile x8 gen2 PCI-e slot, while also supporting three internal x16 gen2 slots dedicated for three GPU's (up to 225 watts each). The SL390s G7 4 U half width server tray support a low profile x8 gen2 PCI-e slot, while also supporting eight internal x16 gen2 slots dedicated for eight GPU's (up to 225 watts each)

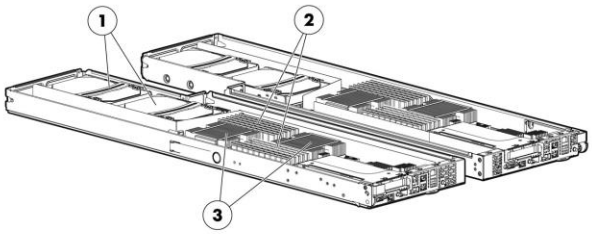

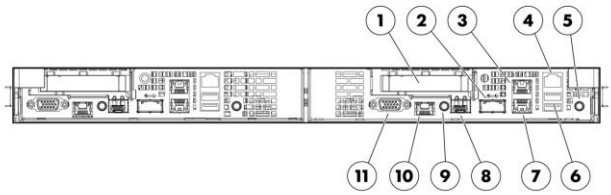

1U Open View:

1. Two 3.5" or four 2.5" non-hot plug hard drives using a quick release drive carrier
2. 12 DDR3 DIMM Slots
3. Support for up to two Intel® 5600 sequence processors

1U Front View:

1. Low profile x16 PCI-e Gen 2
2. Optional Infiniband port (QSFP)
3. 1Gb Ethernet port
4. iLO3 dedicated management port
5. UID LED
6. 2 front USB ports
7. 1 Gb Ethernet port
8. 10Gb Ethernet port (SFP+)
9. Power Button
10. Serial port (RJ45)
11. Video Port

Overview

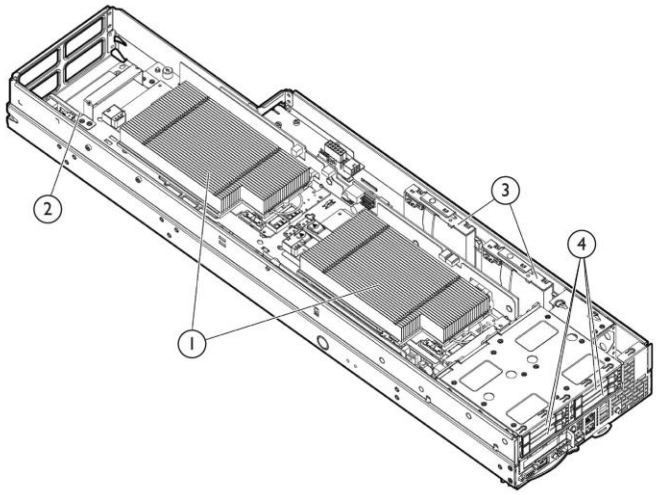

2U Open View:

1. Support for up to two GPUs
2. Support for 1 GPU
3. Two internal non-hot plug 2.5" hard drives
4. Four 2.5" hot plug hard drives

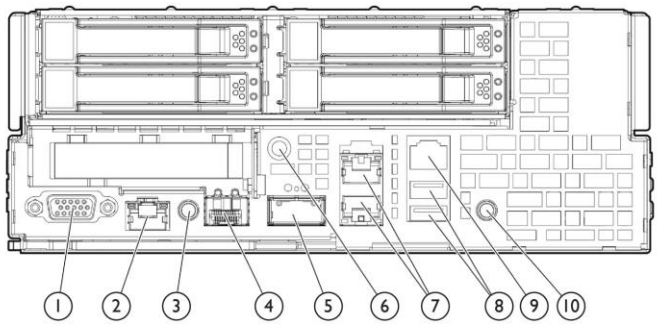

2U Front View:

1. Video Port
2. Serial port (RJ45)
3. Power Button
4. 10Gb Ethernet port (SFP+)
5. Optional Infiniband port (QSFP)
6. Health LED
7. (2) 1Gb Ethernet ports
8. 2 front USB ports
9. iLO3 dedicated management port
10. UID LED

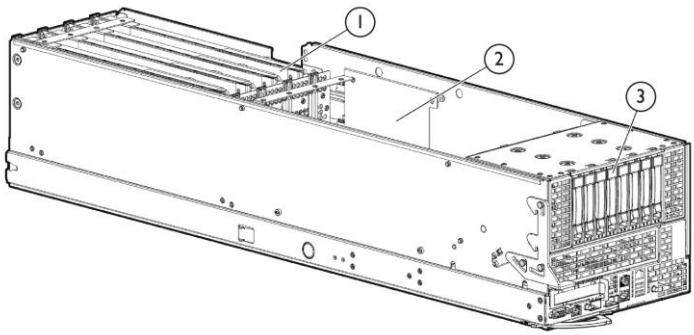

4U Open View:

1. Support for 4 rear GPUs
2. Support for 4 front GPUs
3. Eight 2.5" hot plug hard drives

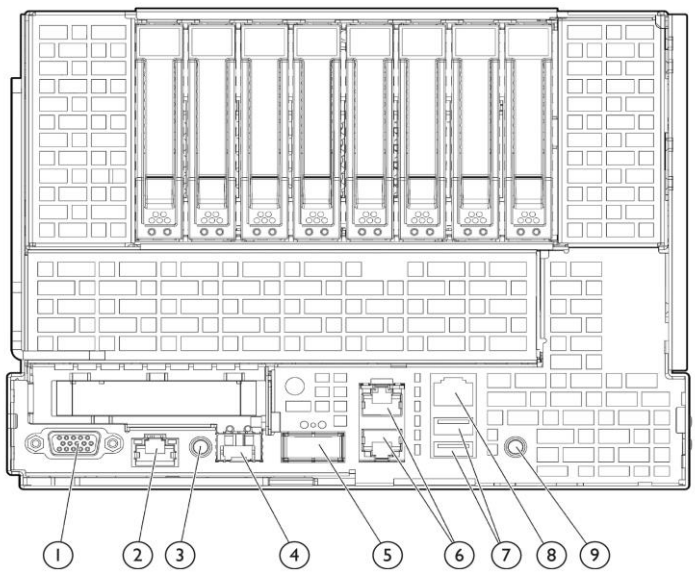

4U Front View:

1. Video Port
2. Serial port (RJ45)
3. Power Button

Overview

4. 10Gb Ethernet port (SFP+)
5. Optional InfiniBand port (QSFP)
6. (2) 1Gb Ethernet ports
7. 2 front USB ports
8. iLO3 dedicated management port
9. UID LED

What's New

- Support for new HP hard drive

Standard Features

NOTE: For the Standard Features shipped in the Factory Integrated Models, please see the "Configuration Information - Factory Integrated Models" section.

Processor One of the following depending on Model	**Six-Core Processor** Intel® Xeon® X5690 (3.46GHz/6-core/12MB/130W), DDR3-1333, HT, Turbo 1/1/1/1/2/2) Processor Intel® Xeon® X5675 (3.06GHz/6-core/12MB/95W, DDR3-1333, HT, Turbo 2/2/2/2/3/3) Processor Intel® Xeon® E5645 (2.40GHz/6-core/12MB/80W, DDR3-1333, HT, Turbo 1/1/1/1/2/3) Processor Intel® Xeon® E5649 (2.53GHz/6-core/12MB/80W, DDR3-1333, HT, Turbo 1/1/1/1/2/2) Processor **Quad-Core Processors** Intel® Xeon® X5687 (3.60GHz/4-core/12MB/130W, DDR3-1333, HT, Turbo 1/1/2/2) Processor Intel® Xeon® X5672 (3.20GHz/4-core/12MB/95W, DDR3-1333, HT, Turbo 1/1/2/2) Processor Intel® Xeon® E5607 (2.26GHz/4-core/8MB/80W, DDR3-1333, HT, Turbo 1/1/2/2/3/3) Processor Intel® Xeon® E5606 (2.13 GHz/4-core/8MB/80W,DDR3-1066, HT, Turbo 1/1/2/2/3/3) Processor Intel® Xeon® E5603 (1.60GHz/4-core/4MB/80W, DDR3-1066) Processor **NOTE:** 130 watt processors are available in all 3 form factors, and can utilize the redundant fan kit. **NOTE:** HT indicates that the processor model supports Intel® Hyper-Threading Technology **NOTE:** Turbo indicates the maximum potential frequency increment when using Intel® Turbo Boost Technology, with 4, 3, 2, and 1 cores active. **NOTE:** DDR3 speed is the maximum memory speed of the processor. Actual memory speed may depend on the quantity and type of DIMMs installed. **NOTE:** For the Intel 5500 Series, the letter preceding the model number indicates the performance/wattage of the processor. "X" denotes High Performance/Wattage; "E" denotes Enterprise Performance/Wattage (Mainstream), and "L" denotes Lower Wattage. **NOTE:** Up to 2 processors supported. Mixing different processor models is not supported. **NOTE:** GPUs are not supported with configurations consisting of a single CPU
Cache Memory One of the following depending on Model	12MB (1 x 12MB) Level 3 cache **NOTE:**For all 5600 sequence processors. 8MB (1 x 8MB) Level 3 cache **NOTE:** For E5607 and E5606 processors. 4MB (1 x 4MB) Level 3 cache **NOTE:** For E5603 processor.
Chipset	Intel® 5520 Chipset **NOTE:** For more information regarding Intel chipsets, please see the following URL: http://www.intel.com/products/server/chipsets/
Upgradeability	Upgradeable to two processors
Memory Protection	Advanced ECC (multi-bit error protection) Lock-step mode
Memory	Type: DDR3 Registered (RDIMM) or Unbuffered (UDIMM) Maximum (RDIMM) (per server tray): 192GB (12 x 16GB) for Registered Memory configurations Maximum (UDIMM) (per server tray): 48GB (12 x 4GB) for Unbuffered Memory configurations **NOTE:** Depending on the memory configuration and processor model, the memory speed may run at 1333MHz, 1066MHz, or 800MHz. Please see the Online Memory Configuration Tool at: www.hp.com/go/ddr3memory-configurator.

Standard Features

NOTE: Kits described as LP include Low Power DIMMs. For more information on ProLiant Energy Efficient Features, see: www.hp.com/go/proliant-energy-efficient.

Network Controller

HP NC362i Integrated Dual Port Gigabit Server Adapter
HP NC543i 2-port 4xQDR IB/10Gb Adapter

Expansion Slots

For SL390s 1U half width server:

- Up to one available PCI Express 2.0 slots:
- Standard Slot 1: low-profile x16 PCI-Express 2.0

For SL390s 2U half width server:

- Up to four available PCI Express 2.0 slots:
- Standard Slot 1: low-profile x8 PCI-Express 2.0
- Internal Slots 3: x16 PCI-express 2.0 for internal GPU (up to 225 watts) support

For SL390s 4U half width server:

- Up to nine available PCI Express 2.0 slots:
- Standard Slot 1: low-profile x8 PCI-Express 2.0
- Internal Slots 8: x16 PCI-express 2.0 for internal GPU (up to 225 watts/GPU) support

Expansion Slots #	Technology	Bus Width**	Connector Width	Form Factor	Notes
1	PCI-Express 2.0	x16	x16	Low Profile	3.3 volts

** Indicates the number of physical electrical lanes running to the connector.

Storage Controller

HP Embedded Smart Array B110i SATA RAID Controller (RAID 0, 1, 10) per server node

NOTE: To enable RAID on Embedded SATA, use the HP Smart Array B110i SATA Raid controller, To enable use of the B110i, enter the ROM based setup utility(RBSU). The option for enabling RAID can be found in the advanced section of the RBSU. For additional details www.hp.com/go/SATARAID

NOTE: Transfer rate: 3.0 Gb/s SATA.
NOTE: A HP Smart Array controller is required for SAS Hard Drives
NOTE: An external diskette drive, USB floppy drive key or virtual FDD using LO100 Advanced Pack is needed to install storage controller drivers during a Windows operating system installation from a CD.

Internal Storage Devices

Diskette Drives	Via USB only	
Optical Drives	DVD / CD drives via USB only External support only.	
Hard Drives	None ship standard	
	SL390s 1U half width server	Support for up to two 3.5" or four 2.5" non-hot plug hard drives using a quick release drive carrier
	SL390s 2U half width server	Support for up to four 2.5" hot plug hard drives Support for up to two internal 2.5" non-hot plug hard drives using a quick release drive carrier
	SL390s 4U half width server	Support for up to eight 2.5" hot plug hard drives

Standard Features

Maximum Internal Storage	**1U Half Width tray**		
	Non-Hot Plug SATA 3.5"	4.0 TB	2 x 2TB
	Non-Hot Plug SATA 2.5"	2.0 TB	4 x 500GB
	Non-Hot Plug SAS 3.5"	4.0TB	2 x 2TB
	Non-Hot Plug SAS 2.5"	1.2TB	4 x 300GB
	Hot Plug SATA SSD 2.5"	1.6TB	4 x 400GB
	Non-Hot Plug SSD 2.5"	1.6TB	4 x 400GB
	2U Half width tray		
	Hot Plug SATA 2.5"	2.0TB	4 x 500GB
	Hot Plug SAS 2.5"	3.6TB	4 x 900GB
	Hot Plug SSD 2.5"	480GB	4 x 120GB
	Hot Plug SATA SSD 2.5"	1.6TB	4 x 400GB
	Non-Hot Plug SAS 2.5"	1.2TB	4x300GB
	Non-Hot Plug SSD 2.5"	1.6TB	4x400GB
	4U Half width tray		
	Hot Plug SATA 2.5"	4.0TB	8 x 500GB
	Hot Plug SAS 2.5"	4.0TB	8 x 500GB
	Hot Plug SSD 2.5"	3.2TB	8 x 400GB
	Hot Plug SATA SSD 2.5"	3.2TB	8 x 400GB

Interfaces	Parallel	None
	Network RJ-45	Two 10/100/1000 NIC ports One 10GB SPF+ One optional IB (QSFP)
	Serial (RJ-45)	1
	Graphics	1
	Micro SD	1
	USB	3 (two front, 1 internal)
	Management	1 Dedicated iLO3 Management Port
	Health LED	1 front
	Power	1 front
	UID	1 front

Industry Standard Compliance

ACPI 2.0b Compliant
PCI 2.2 Compliant
WOL Support
Microsoft® Logo certifications
PXE Support
USB 1.1 and 2.0 Compliant
SMBIOS 2.6.1

Graphics

ATI RN50/ES1000 w/ 64MB memory

Server Power Cords

One 6' Highline (IEC-IEC) power cord ships standard
NOTE: HP ProLiant SL servers are primarily connected to PDU's in data center racks so they ship standard with only a PDU power cord (416151-B21).

Standard Features

	NOTE: If customers require a local power cord, they can check the power cord matrix for the appropriate cord. Please see the following power cord matrix: http://www.hp.com/go/powercordmatrix.
HP Common Slot Power Supplies	HP has a new design for ProLiant power. The new Common Slot Power Supply provides the customer with commonality in power supplies across multiple platforms to save on the cost of spares and allows HP to offer multiple power solutions to fit the customers' needs. Many HP ProLiant Servers come with or compatible with high-efficiency HP CS Power Supplies. These power supplies are designed for highest efficiency to provide power efficiency without degrading performance of the ProLiant server. HP CS Power Supplies options for this server will have efficiency ratings up to 94%. There are six power options available, depending on the configuration of your server. To make sure you select the correct power supply to meet your configuration, we suggest that you use the HP Power Advisor to decide the "Right-Size" for your configuration. All HP Common Slot power sources are UL, CE Mark Compliant, Hot Plug and Redundant (redundancy dependent on node configurations).
System Fans	Non redundant model - 8 fans required Redundant model - redundant fan kit required **NOTE:** all 8 fan bays must be populated with either redundant or non-redundant fans **NOTE:** mixing and matching of fans is not allowed
Operating Systems and Virtualization Software Support for ProLiant Servers	Microsoft Windows Server Red Hat Enterprise Linux (RHEL) SUSE Linux Enterprise Server (SLES) VMware ESX **NOTE:** For more information on HP's Certified and Supported ProLiant Servers for OS and Virtualization Software and latest listing of software drivers available for your server including how to purchase from HP, please visit our OS Support Site at: http://www.hp.com/go/ossupport
Form Factor	HP ProLiant s6500 Chassis - 4U HP ProLiant SL390s G7 1U half width server tray HP ProLiant SL390s G7 2U half width server tray HP ProLiant SL390s G7 4U half width server tray
HP Insight management software	HP Insight Foundation Managing the growing number of servers can be complex and expensive for your organization. IT managers need to address changing business needs with tools that meet the challenges of managing today's complex Datacenters. HP provides management solutions that are designed to simplify a server's installation, configuration and maintenance throughout the entire server lifecycle. This provides the customer with higher levels of operational efficiency and highly reliable systems: www.hp.com/go/foundation. The foundation pack includes: • HP SmartStart • HP Management DVD • HP ProLiant Smart Update Firmware DVD SmartStart version supported (minimum): SmartStart 8.40. http://www.hp.com/servers/smartstart **NOTE:** In an effort to support reducing our environmental impact, the HP

Standard Features

		Insight Foundation Suite for ProLiant media will be available as a selectable option for this server at time of order of a CTO SKU. This will allow customers to order the number of media kits that best meet their needs and eliminate receiving unnecessary duplicate media.
	HP Integrated Lights-Out 3 (iLO 3)	HP Integrated Lights-Out 3 (iLO) simplifies server setup, health monitoring, power and thermal control, and lights-out remote administration of ProLiant ML, DL, and BL servers. HP iLO functions without additional software and can be accessed from any location via a web browser. HP iLO works hand-in-hand with HP Systems Insight Manager, Insight Control suites, and Insight Dynamics for ProLiant, helping customers unleash the value of the ProLiant platform and deliver the highest possible quality of IT service. For more information, visit: www.hp.com/go/iLO

Security	Power-on password Keyboard password QuickLock, Network Server Mode Serial interface control Administrator's password iLO 3 (Integrated Lights-Out 3) has 12 customizable user accounts and SSL encryption iLO 3 can be disabled via a Global Setting iLO Advanced supports directory services integration
Warranty	This product is covered by a global limited warranty and supported by HP Services and a worldwide network of HP Authorized Channel Partners. Hardware diagnostic support and repair is available for one year from date of purchase. Support for software and initial setup is available for 90 days from date of purchase. Enhancements to warranty services are available through HP Care Pack services or customized service agreements. Hard drives have either a one year or three year warranty. **NOTE:** Server Warranty includes 1 year Parts, 1 year Labor, 1-year on-site support with next business day response. Warranty repairs may be accomplished through the use of Customer Self Repair (CSR) parts. These parts fall into two categories: 1) Mandatory CSR parts are designed for easy replacement. A travel and labor charge will result when customers decline to replace a Mandatory CSR part; 2) Optional CSR parts are also designed for easy replacement but may involve added complexity. Customers may choose to have HP replace Optional CSR parts at no charge. Additional information regarding worldwide limited warranty and technical support is available at: http://h18004.www1.hp.com/products/servers/platforms/warranty/index.html.

Optional Features

HP Insight management software	HP Insight Control	HP Insight Control, a product option, delivers essential infrastructure management that can help save time and money by making it easy to deploy, migrate, monitor, remote control, and optimize your IT infrastructure through a single, simple management console. For more information, see http://www.hp.com/go/insightcontrol. HP Insight Control includes one year of 24 x 7 HP Software Technical Support and Update Service ensuring rapid access to HP support staff and proactive delivery of software updates. For more information about this service, see: http://www.hp.com/services/insight.
	HP Insight Dynamics for ProLiant	HP Insight Dynamics for ProLiant, a product option, is advanced infrastructure management software that enables IT staff to instantly adjust their environments to meet dynamic business demands by provisioning, optimizing and protecting complex infrastructure in minutes. It's a powerful toolkit, integrated-by-design, that accelerates complex technology projects and simplifies daily operations, transforming data center economics. With Insight Dynamics IT professionals can plan capacity and power continuously, balance workloads across physical and virtual resources, and ensure cost-effective high availability. It also enables IT organizations to provision infrastructure consistently and automatically from pools of shared resources using a self-service portal. Resources provisioned can range from a single virtual machine to complex multi-tier environments and their associated physical and virtual resource requirements. In addition to the previous functional benefits, it also provides a cost-effective disaster recovery for physical and virtual environments that works with HP Continuous Access software for both the Enterprise Virtual Array and the XP storage array allowing application environments to be reactivated in minutes with the touch of a button to a remote location. **NOTE:** For more information, visit: http://www.hp.com/go/insightdynamics
High Performance Clusters	HP Cluster Platforms	HP Cluster Platforms are specifically engineered, factory-integrated large-scale ProLiant clusters optimized for High Performance Computing, with a choice of servers, networks and software. Operating system options include specially priced offerings for Red Hat Enterprise Linux and SUSE Linux Enterprise Server, as well as Microsoft Windows HPC Server. A Cluster Platform Configurator simplifies ordering. http://www.hp.com/go/clusters
	HP HPC Interconnects	High Performance Computing (HPC) interconnect technologies are available for this server as part of the HP Cluster Platform portfolio. These high-speed InfiniBand and Gigabit interconnects are fully supported by HP when integrated within an HP cluster. Flexible, validated solutions can be defined with the help of configuration tools. http://www.hp.com/techservers/clusters/ucp/index.html
	HP Cluster Management Utility	HP Cluster Management Utility (CMU) is an HP-licensed and HP-supported suite of tools that are used to manage large-scale Linux ProLiant systems. CMU includes software for the centralized provisioning, management and monitoring of nodes. CMU makes the administration of clusters user friendly, efficient, and effective. http://www.hp.com/go/cmu
	HP HPC Linux Value Pack	HP HPC Linux Value Pack (Value Pack) is an HP-licensed and HP-supported specially priced software bundle for the development and deployment of applications on HPC Cluster Platforms. Value Pack includes the Platform HPC Enterprise Edition suite of tools including the LSF workload scheduler,

	the HP-MPI parallelization library. Also included are the HP Unified Parallel C compiler and the HP Shmem library, as well as the execution environments for the libraries and compiler. HP HPC Linux Value Pack
Factory Express Portfolio for Servers and Storage	HP Factory Express offers configuration, customization, integration and deployment services for HP servers and storage products. Customers can choose how their factory solutions are built, tested, integrated, shipped and deployed. Factory Express offers service packages for simple configuration, racking, installation, complex configuration and design services as well as individual factory services, such as image loading, asset tagging, and custom packaging. HP products supported through Factory Express include a wide array of servers and storage: HP Integrity, HP ProLiant, HP ProLiant Server Blades, HP BladeSystem, HP 9000 servers as well as the MSAxxxx, VA7xxx, EVA, XP, rackable tape libraries and configurable network switches. For more information on Factory Express services for your specific server model please contact your sales representative or go to: http://www.hp.com/go/factory-express.
HP Simple Configurator	SCE is a guided self service tool to help sales and non technical people provide customers with initial configurations in 3 to 5 minutes. You may then send the configuration on for configuration help, or use in your existing ordering processes. If you require "custom" rack configuration or configuration for products not available in SCE, please contact HP's Customer Business Center or an Authorized Partner for assistance. http://www.hp.com/products/configurator
GPU Computing Modules	Each SL390s 2U tray will accommodate up to three GPUs, with options including HP NVIDIA Tesla M2050, M2070, M2070Q and M2090 computational accelerator modules. Each SL390s 4U tray will accommodate up to eight GPUs, with options including NVIDIA Tesla M2050, M2070, M2070Q and M2090 computational accelerator modules. The NVIDIA M2070Q module enables computational acceleration as well as high-end QUADRO® graphics. The other modules are primarily for computational acceleration. **NOTE:** The ambient temperature for SL390s 2U systems with between one and three NVIDIA M2090 GPUs, must be 30 degrees Celsius or less. The ambient temperature for SL390s 4U systems with between five and eight NVIDIA M2090 GPUs, must be 30 degrees Celsius or less. All other SL390s systems may be operated with ambient temperatures up to 35 degrees Celsius. **NOTE:** When adding GPU solutions to the SL390 2U & 4U servers one must utilize the HP 1200W CS Platinum Power Supply Kit, 578322-B21, for all four power supply slots. **NOTE:** GPU power consumption is managed dynamically in order to optimize performance within acceptable GPU power limits. The power limits are system-dependent. For SL390 2U systems with up to 2 GPUs, and for SL390 4U systems with up to 6 GPUs, the GPU power-cap is set to 250 watts. For all other GPU configurations, the GPU power-cap is set to 225 watts."

Service and Support

Service and Support	**THE SL390s tray is a part of the HP ProLiant s6500 Chassis. Support for these tray need to be purchased at a chassis level. Please refer to HP ProLiant s6500 Chassis quick spec documentation for details.** **HP Technology Services for Industry Standard Servers** HP Technology Services delivers confidence, reduces risk and helps customers realize agility and stability. Connect to HP to help prevent problems and solve issues faster. Our support technology lets you to tap into the knowledge of millions of devices and thousands of experts to stay informed and in control, anywhere, any time. **Protect your business beyond warranty with HP Care Pack Services** HP Care Pack Services enable you to order the right service level, length of coverage and response time as you purchase your new server, giving you full entitlement for the term you select.
Get connected to HP to improve your support experience	Prevent problems with innovative, automated monitoring tools and proactive services. Combining Proactive Care Services with our remote support technology such as Insight Online provides you with expert advice and personalized, cloud-based automated IT support, helping to prevent unplanned down time and solve problems quickly. For more information, visit: www.hp.com/go/proactiveinsightexperience
Parts and Materials	HP will provide HP-supported replacement parts and materials necessary to maintain the covered hardware product in operating condition, including parts and materials for available and recommended engineering improvements. Parts and components that have reached their maximum supported lifetime and/or the maximum usage limitations as set forth in the manufacturer's operating manual, product quick-specs, or the technical product data sheet will not be provided, repaired, or replaced as part of these services. The defective media retention service feature option applies only to Disk or eligible SSD/Flash Drives replaced by HP due to malfunction.
For more information	To learn more on HP ProLiant servers and HP BladeSystem servers, please contact your HP sales representative or HP Authorized Channel Partner. Or visit: http://www.hp.com/services/proliant

Pre-configured Models

NOTE: For the Standard Features shipped in the "Factory Integrated Models", please see the "Configuration Information - Factory Integrated Models" section.
NOTE: Pre-configured models ship with the configurations below. Options can be selected from the Core or Additional options section of this QuickSpecs.
NOTE: HP does not allow factory integration of options into pre-configured models. Any additional options purchased will be shipped separately.
NOTE: If you desire a custom configuration please see "Configuration Information - Factory Integrated Models" section of this QuickSpecs.
NOTE: Not all models are available in all regions. Check with your local country HP offices for availability.
NOTE: Server SKUs below are the server tray only, a chassis is needed to run servers.
NOTE: Mixing and matching of half width trays is supported - See s6500 Tray mixing support plan.
NOTE: 130 watt processors are available in all 3 form factors, and can utilize the redundant fan kit.
NOTE: The ambient temperature for SL390s 2U systems with between one and three NVIDIA M2090 GPUs, must be 30 degrees Celsius or less. The ambient temperature for SL390s 4U systems with between five and eight NVIDIA M2090 GPUs, must be 30 degrees Celsius or less. All other SL390s systems may be operated with ambient temperatures up to 35 degrees Celsius.
NOTE: When adding GPU solutions to the SL390 2U & 4U servers one must utilize the HP 1200W CS Platinum Power Supply Kit, 578322-B21, for all four power supply slots.

HP ProLiant SL390s G7 1U Server

Base Models

HP ProLiant SL390s G7 1U Left Half Width Tray X5650 1P 12GB-R B110i Base Server 625538-B21	**Processor(s)**	(1) Intel® Xeon® Processor X5650 (2.66 GHz, 12MB L3 Cache, 95 Watts, DDR3-1333, HT Turbo 2/2/2/2/3/3)
	Cache Memory	12MB (1 x 12MB) Level 3 cache
	Memory	12 GB (3 x 4 GB) PC3-10600R (DDR3-1333) Registered DIMM **NOTE:** Total of 12 DIMM slots.
HP ProLiant SL390s G7 1U Right Half Width Tray X5650 1P 12GB-R B110i Base Server 625539-B21	**Network Controller**	HP NC362i Integrated Dual Port Gigabit Server Adapter HP NC543i 2-port 4xQDR IB/10Gb Adapter
	Storage Controller	HP Embedded Smart Array B110i SATA RAID Controller (RAID 0, 1, 10)
	Hard Drive	None ship standard
	Internal Storage	2 LFF or 4 SFF Hard drives
	Optical Drive	None ship standard
	Power Supply	Chassis sold separately
	Fans	Chassis sold separately
	Form Factor	1U Half Width server tray
	Warranty	Server Warranty includes 1-Year Parts, 1-Year Labor, 1-Year onsite service

Entry Models

HP ProLiant SL390s G7 1U Left Half Width Tray E5620 1P 6GB-R B110i Entry Server 625536-B21	**Processor(s)**	(1) Intel® Xeon® Processor E5620 (2.40 GHz, 12MB L3 Cache, 80 Watts, DDR3-1066, HT Turbo 1/1/2/2)
	Cache Memory	12MB (1 x 12MB) Level 3 cache
	Memory	6 GB (3 x 2 GB) PC3-10600R (DDR3-1333) Registered DIMM **NOTE:** Total of 12 DIMM slots.
HP ProLiant SL390s G7 1U Right Half Width Tray E5620 1P 6GB-R B110i Entry Server 625537-B21	**Network Controller**	HP NC362i Integrated Dual Port Gigabit Server Adapter HP NC543i 2-port 4xQDR IB/10Gb Adapter
	Storage Controller	HP Embedded Smart Array B110i SATA RAID Controller (RAID 0, 1, 10)
	Hard Drive	None ship standard
	Internal Storage	2 LFF or 4 SFF Hard drives
	Optical Drive	None ship standard

Pre-configured Models

	Power Supply	Chassis sold separately
	Fans	Chassis sold separately
	Form Factor	1U Half Width server tray
	Warranty	Server Warranty includes 1-Year Parts, 1-Year Labor, 1-Year onsite service

HP ProLiant SL390s G7 2U Server

Base Models

HP ProLiant SL390s G7 2U Left Half Width Tray X5650 1P 12GB-R B110i Base Server 625544-B21	**Processor(s)**	(1) Intel® Xeon® Processor X5650 (2.66 GHz, 12MB L3 Cache, 95 Watts, DDR3-1333, HT Turbo 2/2/2/2/3/3)
	Cache Memory	12MB (1 x 12MB) Level 3 cache
	Memory	12 GB (3 x 4 GB) PC3-10600R (DDR3-1333) Registered DIMM **NOTE:** Total of 12 DIMM slots.
HP ProLiant SL390s G7 2U Right Half Width Tray X5650 1P 12GB-R B110i Base Server 625545-B21	**Network Controller**	HP NC362i Integrated Dual Port Gigabit Server Adapter HP NC543i 2-port 4xQDR IB/10Gb Adapter
	Storage Controller	HP Embedded Smart Array B110i SATA RAID Controller (RAID 0, 1, 10)
	Hard Drive	None ship standard
	Internal Storage	4 SFF Hard drives
	Optical Drive	None ship standard
	Power Supply	Chassis sold separately
	Fans	Chassis sold separately
	Form Factor	1U Half Width server tray
	Warranty	Server Warranty includes 1-Year Parts, 1-Year Labor, 1-Year onsite service

Entry Models

HP ProLiant SL390s G7 2U Left Half Width Tray E5620 1P 6GB-R B110i Entry Server 625542-B21	**Processor(s)**	(1) Intel® Xeon® Processor E5620 (2.40 GHz, 12MB L3 Cache, 80 Watts, DDR3-1066, HT Turbo 1/1/2/2)
	Cache Memory	12MB (1 x 12MB) Level 3 cache
	Memory	6 GB (3 x 2 GB) PC3-10600R (DDR3-1333) Registered DIMM **NOTE:** Total of 12 DIMM slots.
HP ProLiant SL390s G7 2U Right Half Width Tray E5620 1P 6GB-R B110i Entry Server 625543-B21	**Network Controller**	HP NC362i Integrated Dual Port Gigabit Server Adapter HP NC543i 2-port 4xQDR IB/10Gb Adapter
	Storage Controller	HP Embedded Smart Array B110i SATA RAID Controller (RAID 0, 1, 10)
	Hard Drive	None ship standard
	Internal Storage	4 SFF Hard drives
	Optical Drive	None ship standard
	Power Supply	Chassis sold separately
	Fans	Chassis sold separately
	Form Factor	1U Half Width server tray
	Warranty	Server Warranty includes 1-Year Parts, 1-Year Labor, 1-Year onsite service

HP ProLiant SL390s G7 4U Server

Performance Models

HP ProLiant SL390s G7 4U Left Half Width Tray X5672 2P 24GB Server	**Processor(s)**	(2) Intel® Xeon® Processor X5672 (3.20 GHz, 12MB L3 Cache, 95 Watts, DDR3-1066, HT Turbo 2/2/3/3)
	Cache Memory	12MB (1 x 12MB) Level 3 cache

Pre-configured Models

626448-B21	**Memory**	24 GB (6 x 4 GB) PC3-10600R (DDR3-1333) Registered DIMM **NOTE:** Total of 12 DIMM slots.
HP ProLiant SL390s G7 4U Right Half Width Tray X5672 2P 24GB Server 626449-B21	**Network Controller**	HP NC362i Integrated Dual Port Gigabit Server Adapter HP NC543i 2-port 4xQDR IB/10Gb Adapter
	Storage Controller	HP Embedded Smart Array B110i SATA RAID Controller (RAID 0, 1, 10)
	Hard Drive	None ship standard
	Internal Storage	8 SFF Hard drives
	Optical Drive	None ship standard
	Power Supply	Chassis sold separately
	Fans	Chassis sold separately
	Form Factor	1U Half Width server tray
	Warranty	Server Warranty includes 1-Year Parts, 1-Year Labor, 1-Year onsite service

Base Models

HP ProLiant SL390s G7 4U Left Half Width Tray X5650 1P 12GB Server 626446-B21	**Processor(s)**	(1) Intel® Xeon® Processor X5650 (2.66 GHz, 12MB L3 Cache, 95 Watts, DDR3-1333, HT Turbo 2/2/2/2/3/3)
	Cache Memory	12MB (1 x 12MB) Level 3 cache
	Memory	12 GB (3 x 4 GB) PC3-10600R (DDR3-1333) Registered DIMM **NOTE:** Total of 12 DIMM slots.
HP ProLiant SL390s G7 4U Right Half Width Tray X5650 1P 12GB Server 626447-B21	**Network Controller**	HP NC362i Integrated Dual Port Gigabit Server Adapter HP NC543i 2-port 4xQDR IB/10Gb Adapter
	Storage Controller	HP Embedded Smart Array B110i SATA RAID Controller (RAID 0, 1, 10)
	Hard Drive	None ship standard
	Internal Storage	8 SFF Hard drives
	Optical Drive	None ship standard
	Power Supply	Chassis sold separately
	Fans	Chassis sold separately
	Form Factor	1U Half Width server tray
	Warranty	Server Warranty includes 1-Year Parts, 1-Year Labor, 1-Year onsite service

HP ProLiant s6500 chassis

HP ProLiant s6500 3/1200 Redundant Fan Chassis 629236-B21	**Power Supply**	(3) 1200W (94% efficient) Hot Plug Power Supplies
	Fans	(8) hot plug redundant fans
	Form Factor	4U chassis
	Tray blank	1 tray blank
	Power supply blanks	1 power supply blank
HP ProLiant s6500 2/1200 Non Redundant Fan Chassis 629235-B21	**Power Supply**	(2) 1200W (94% efficient) Hot Plug Power Supplies
	Fans	(8) cold plug fans
	Form Factor	4U chassis
	Tray blank	1 tray blank
	Power supply blanks	2 power supply blank

S6500 tray mixing support plan

NOTE: s6500 is a 4U chassis and has a left and a right side.
NOTE: The picture below show how each half of the chassis can be configured.

Pre-configured Models

NOTE: This shows mixing and matching of half width trays.
NOTE: 2U half width tray is NOT supported in middle 2 bays.

1U ½ Width
1U ½ Width
1U ½ W
1U ½ W

2U ½ W
2U ½ W

1U ½ W
1U ½ W
2U ½ W

2U ½ W
1U ½ W
1U ½ W

4U ½ W

Configuration Information - Factory Integrated Models

NOTE: This section lists some of the steps required to configure a Factory Integrated Model. To ensure only valid configurations are ordered, HP recommends the use of an HP approved configurator. Contact your local sales representative for information on configurable product offerings and requirements.
NOTE: Configure-to-order (CTO) servers must start with a CTO Chassis.
NOTE: FIO indicates that this option is only available as a factory installable option.
NOTE: If you already have an s6500 chassis skip to Step 1A.

Step 1: Select Nodes

NOTE: Mixing and matching of half width trays is supported in the s6500 chassis.
NOTE: If you do not fill up chassis with servers, the HP node blank Kit 622372-B21 needs to be ordered for each half width 1U space unpopulated.

HP Server Nodes	HP ProLiant SL390s G7 1U Right Tray Node Server	605078-B21
	HP ProLiant SL390s G7 1U Left Tray Node Server	612217-B21
	HP ProLiant SL390s G7 2U Right Half Tray Node Server	605080-B21
	HP ProLiant SL390s G7 2U Left Half Tray Node Server	605081-B21
	HP ProLiant SL390s G7 4U Right Half Tray Node Server	612227-B21
	HP ProLiant SL390s G7 4U Left Half Tray Node Server	612228-B21

Step 2: Choose Required Node Options (only one of the following from each list unless otherwise noted)

HP Processors	**NOTE:** If 2 processors are desired, select one xxxxx-L21 and one xxxxxx-B21. **NOTE:** 130 watt processors are available in all 3 form factors, and can utilize the redundant fan kit.	
	Six-Core Processors	
	HP SL390s G7 Intel® Xeon® X5690 (3.46GHz/6-core/12MB/130W) FIO Processor Kit	638867-L21
	HP SL390s G7 Intel® Xeon® X5675 (3.06GHz/6-core/12MB/95W) FIO Processor Kit	638871-L21
	HP SL390s G7 Intel® Xeon® E5645 (2.53GHz/6-core/12MB/80W) FIO Processor Kit	638894-L21
	HP SL390s G7 Intel® Xeon® E5649 (2.53GHz/6-core/12MB/80W) FIO Processor Kit	638892-L21
	Quad-Core Processors	
	HP SL390s G7 Intel® Xeon® X5687 (3.60GHz/4-core/12MB/130W) FIO Processor Kit	638869-L21
	HP SL390s G7 Intel® Xeon® X5672 (3.20GHz/4-core/12MB/95W) FIO Processor Kit	638890-L21
	HP SL390s G7 Intel® Xeon® E5603 (1.60GHz/4-core/4MB/80W) FIO Processor Kit	638900-L21

HP Memory	**Registered DIMMs (RDIMMs)**	
	HP 2GB (1x2GB) Dual Rank x8 PC3-10600 (DDR3-1333) Registered CAS-9 Memory Kit	500656-B21
	HP 4GB (1x4GB) Dual Rank x4 PC3-10600 (DDR3-1333) Registered CAS-9 Memory Kit	500658-B21
	HP 4GB (1x4GB) Single Rank x4 PC3-10600 (DDR3-1333) Registered CAS-9 Memory Kit	593339-B21
	HP 4GB (1x4GB) Single Rank x4 PC3L-10600 (DDR3-1333) Registered CAS-9 Low Power Memory Kit **NOTE:** Low Voltage DIMMs can only be used with Intel® Xeon® processor 5600 series processors.	604504-B21
	HP 16GB (1x16GB) Quad Rank x4 PC3-8500 (DDR3-1066) Registered CAS-7 Memory Kit	500666-B21
	HP 8GB (1x8GB) Dual Rank x4 PC3-10600 (DDR3-1333) Registered CAS-9 Memory Kit	500662-B21

Configuration Information - Factory Integrated Models

	HP 8GB (1x8GB) Dual Rank x4 PC3L-10600 (DDR3-1333) Registered CAS-9 Low Power Memory Kit	604506-B21
	HP 16GB (1x16GB) Dual Rank x4 PC3L-10600 (DDR3-1333) Registered CAS-9 LP Memory Kit	627812-B21
	HP 32GB (1x32GB) Quad Rank x4 PC3L-8500 (DDR3-1066) Registered CAS-7 LP Memory Kit	627814-B21
	NOTE: Low Voltage DIMMs can only be used with Intel® Xeon® processor 5600 series processors.	
	Unbuffered with ECC DIMMs (UDIMMs)	
	HP 1GB (1x1GB) Single Rank x8 PC3-10600 (DDR3-1333) Unbuffered CAS-9 Memory Kit	500668-B21
	HP 2GB (1x2GB) Dual Rank x8 PC3-10600 (DDR3-1333) Unbuffered CAS-9 Memory Kit	500670-B21
	HP 4GB (1x4GB) Dual Rank x8 PC3-10600 (DDR3-1333) Unbuffered CAS-9 Memory Kit	500672-B21
	HP 4GB (1x4GB) Dual Rank x8 PC3L-10600 (DDR3-1333) Unbuffered CAS-9 Low Power Memory Kit	619488-B21
	NOTE: For detailed memory configuration rules and guidelines, please use the Online DDR3 Memory Configuration Tool: www.hp.com/go/ddr3memory-configurator.	
	NOTE: There is a maximum support limitation of 8 ranks per memory channel (maximum of 2 quad rank DIMMs per channel) **NOTE:** PC3L is a low voltage memory.	
	NOTE: Memory Min and Max depends on number of processors and type of memory: 1. Processor -> R-Dimm: Min 1 // Max 6 U-Dimm: Min 1 // Max 12 2. Processors -> R-Dimm: Min 2 // Max 6 U-Dimm: Min 2 // Max 12	

Step 3: Choose Additional Factory Integratable Options (only one of the following from each list unless otherwise noted)

Riser Cards	HP SL390 PCIe Riser x16 FIO Card Kit **NOTE:** For additional Riser card options refer to the Unique Options section of this QuickSpecs. Only FIO options are displayed here.	615149-B21
HP Storage Controllers	HP Smart Array P212/256 BBWC 1-ports Int/1-ports Ext PCIe x8 FIO SAS Controller **NOTE:** HP P212 SAS 4HDD Cable Kit is required when adding SAS hard drives using the P212 controller (574001-B21)	491191-B21
	HP Smart Array P410/ZM 2-ports Int PCIe x8 FIO SAS Controller **NOTE:** HP P410 SAS 4HDD Cable Kit is required when adding SAS hard drives using the P410 controller (583997-B21)	462860-B21
	HP Smart Array P410/256 BBWC 2-ports Int PCIe x8 FIO SAS Controller **NOTE:** HP P410 SAS 4HDD Cable Kit is required when adding SAS hard drives using the P410 controller (583997-B21)	491195-B21
	HP Smart Array P411/256 BBWC 2-ports Ext PCIe x8 FIO SAS Controller **NOTE:** For additional Storage Controller options refer to the Additional Options section of this QuickSpecs. Only FIO options are displayed here.	491193-B21

Step 4: Choose Additional Options for Factory Integration

NOTE: For additional options, please refer to the "Core Options" and "Additional Options" section below.

Core Options

NOTE: Some options may not be integrated at the factory. To ensure only valid configurations are ordered, HP recommends the use of an HP approved configurator. Contact your local sales representative for additional information.

HP Unique Options	HP SL390s Small Form Factor (SFF) Enablement Kit **NOTE:** required for every 2 SFF drives being added to the 1U tray.	625034-B21
	HP SL390 2 Graphics Processing Unit Riser Kit **NOTE:** riser need when adding 2 GPUs to 2U tray.	614839-B21
	HP SL390 Single Graphics Processing Unit Riser Kit **NOTE:** needed when adding 1 GPU to 2U tray. **NOTE:** also needed if adding 3rdd GPU to 2U tray.	614840-B21
HP Processors	**Six-Core Processors**	
	HP SL390s G7 Intel® Xeon® X5690 (3.46GHz/6-core/12MB/130W) Processor Kit	638867-B21
	HP SL390s G7 Intel® Xeon® X5675 (3.06GHz/6-core/12MB/95W) Processor Kit	638871-B21
	HP SL390s G7 Intel® Xeon® E5645 (2.40GHz/6-core/12MB/80W) Processor Kit	638894-B21
	HP SL390s G7 Intel® Xeon® E5649 (2.53GHz/6-core/12MB/80W) Processor Kit	638892-B21
	Quad-Core Processors	
	HP SL390s G7 Intel® Xeon® X5687 (3.60GHz/4-core/12MB/130W) Processor Kit	638869-B21
	HP SL390s G7 Intel® Xeon® X5672 (3.20GHz/4-core/12MB/95W) Processor Kit	638890-B21
	HP SL390s G7 Intel® Xeon® E5607 (2.26GHz/4-core/8MB/80W) Processor Kit	638896-B21
	HP SL390s G7 Intel® Xeon® E5606 (2.13GHz/4-core/8MB/80W) Processor Kit	638898-B21
	HP SL390s G7 Intel® Xeon® E5603 (1.60GHz/4-core/4MB/80W) Processor Kit	638900-B21
	NOTE: 130 watt processors are available in all 3 form factors, and can utilize the redundant fan kit. **NOTE:** HT indicates that the processor model supports Intel® Hyper-Threading Technology. **NOTE:** Turbo indicates the maximum potential frequency increment when using Intel® Turbo Boost Technology, with 4, 3, 2, and 1 cores active. **NOTE:** DDR3 speed is the maximum memory speed of the processor. Actual memory speed may depend on the quantity and type of DIMMs installed. **NOTE:** For the Intel 5500 Series, the letter preceding the model number indicates the performance/wattage of the processor. "X" denotes High Performance/Wattage; "E" denotes Enterprise Performance/Wattage (Mainstream); and "L" denotes Lower Wattage.	
HP Memory	**Registered DIMMs (RDIMMs)**	
	HP 2GB (1x2GB) Dual Rank x8 PC3-10600 (DDR3-1333) Registered CAS-9 Memory Kit	500656-B21
	HP 4GB (1x4GB) Dual Rank x4 PC3-10600 (DDR3-1333) Registered CAS-9 Memory Kit	500658-B21
	HP 4GB (1x4GB) Single Rank x4 PC3-10600 (DDR3-1333) Registered CAS-9 Memory Kit	593339-B21
	HP 4GB (1x4GB) Single Rank x4 PC3L-10600 (DDR3-1333) Registered CAS-9 Low Power Memory Kit **NOTE:** Low Voltage DIMMs can only be used with Intel® Xeon® processor 5600 series processors.	604504-B21
	HP 16GB (1x16GB) Quad Rank x4 PC3-8500 (DDR3-1066) Registered CAS-7 Memory Kit	500666-B21
	HP 8GB (1x8GB) Dual Rank x4 PC3-10600 (DDR3-1333) Registered CAS-9 Memory Kit	500662-B21

Core Options

	HP 8GB (1x8GB) Dual Rank x4 PC3L-10600 (DDR3-1333) Registered CAS-9 Low Power Memory Kit	604506-B21
	HP 16GB (1x16GB) Dual Rank x4 PC3L-10600 (DDR3-1333) Registered CAS-9 LP Memory Kit	627812-B21
	HP 32GB (1x32GB) Quad Rank x4 PC3L-8500 (DDR3-1066) Registered CAS-7 LP Memory Kit	627814-B21
	NOTE: Low Voltage DIMMs can only be used with Intel® Xeon® processor 5600 series processors.	
	Unbuffered with ECC DIMMs (UDIMMs)	
	HP 1GB (1x1GB) Single Rank x8 PC3-10600 (DDR3-1333) Unbuffered CAS-9 Memory Kit	500668-B21
	HP 2GB (1x2GB) Dual Rank x8 PC3-10600 (DDR3-1333) Unbuffered CAS-9 Memory Kit	500670-B21
	HP 4GB (1x4GB) Dual Rank x8 PC3-10600 (DDR3-1333) Unbuffered CAS-9 Memory Kit	500672-B21
	HP 4GB (1x4GB) Dual Rank x8 PC3L-10600 (DDR3-1333) Unbuffered CAS-9 Low Power Memory Kit	619488-B21
	NOTE: For detailed memory configuration rules and guidelines, please use the Online DDR3 Memory Configuration Tool: www.hp.com/go/ddr3memory-configurator.	
	NOTE: There is a maximum support limitation of 8 ranks per memory channel (maximum of 2 quad rank DIMMs per channel) **NOTE:** PC3L is a low voltage memory.	
	NOTE: Memory Min and Max depends on number of processors and type of memory: 1. Processor -> R-Dimm: Min 1 // Max 6 U-Dimm: Min 1 // Max 12 2. Processors -> R-Dimm: Min 2 // Max 6 U-Dimm: Min 2 // Max 12	

HP Hard Drives

	NOTE: The components of a storage subsystem (e.g. the drive, the HBA/controller, firmware, and the server backplane) should operate at the same data transfer rate or the system bandwidth will be negotiated down to an acceptable level for all components. **NOTE:** Hard drives have either a one year or three year warranty. **NOTE:** The non-hot plug hard drives use a quick release carrier. **NOTE:** Hot plug hard drives are for 2U and 4U trays only. **NOTE:** non hot plug with quick release carrier are used in 1U tray and internal to the 2U tray.	
	SAS Hot Plug SFF (2.5-inch) Enterprise (ENT) Drives	
	HP 900GB 6G SAS 10K rpm SFF (2.5-inch) Dual Port Enterprise 3yr Warranty Hard Drive	619291-B21
	HP 600GB 6G SAS 10K rpm SFF (2.5-inch) Dual Port Enterprise 3yr Warranty Hard Drive	581286-B21
	HP 300GB 6G SAS 10K rpm SFF (2.5-inch) Dual Port Enterprise 3yr Warranty Hard Drive	507127-B21
	HP 300GB 6G SAS 15K rpm SFF (2.5-inch) Hot Plug Enterprise 3 yr Warranty Hard Drive	627117-B21
	HP 146GB 6G SAS 15K rpm SFF (2.5-inch) Dual Port Enterprise 3yr Warranty Hard Drive	512547-B21
	SAS Hot Plug SFF (2.5-inch) Midline (MDL) Drives	

Core Options

HP 1TB 6G SAS 7.2K rpm SFF (2.5-inch) Dual Port Midline 1yr Warranty Hard Drive	605835-B21
HP 500GB 6G SAS 7.2K rpm SFF (2.5-inch) Dual Port Midline 1yr Warranty Hard Drive	507610-B21
SAS Quick Release SFF (2.5-inch) Enterprise (ENT) Drives	
HP 300GB 6G SAS 10K rpm SFF (2.5-inch) Quick-release Dual Port Enterprise 3yr Warranty Hard Drive	574879-B21
SAS Quick Release LFF (3.5-inch) Enterprise (ENT) Drives	
HP 600GB 6G SAS 15K rpm LFF (3.5-inch) Quick-release Dual Port Enterprise 3yr Warranty Hard Drive	574758-B21
HP 300GB 6G SAS 15K rpm LFF (3.5-inch) Quick-release Dual Port Enterprise 3yr Warranty Hard Drive	585980-B21
SAS Quick Release LFF (3.5-inch) Midline (MDL) Drives	
HP 2TB 6G SAS 7.2K rpm LFF (3.5-inch) Quick-release Dual Port Midline 1yr Warranty Hard Drive	574761-B21
NOTE: Please see the QuickSpecs for Technical Specifications and additional information: http://h18000.www1.hp.com/products/quickspecs/12244_div/12244_div.html (Worldwide)	
SATA Hot Plug SFF (2.5-inch) Midline (MDL) Drives	
HP 1TB 3G SATA 7.2K rpm SFF (2.5-inch) Hot Plug Midline 1yr Warranty Hard Drive	625609-B21
HP 500GB 3G SATA 7.2K rpm SFF (2.5-inch) Midline 1yr Warranty Hard Drive	507750-B21
SATA Quick Release SFF (2.5-inch) Midline (MDL) Drives	
HP 500GB 3G SATA 7.2K rpm SFF (2.5-inch) Quick-release Midline 1yr Warranty Hard Drive	574953-B21
SATA Quick Release LFF (3.5-inch) Midline (MDL) Drives	
HP 3TB 3G SATA 7.2K rpm LFF (3.5-inch) Quick Release Midline 1yr Warranty Hard Drive	642098-B21
HP 2TB 3G SATA 7.2K rpm LFF (3.5-inch) Quick-release Midline 1yr Warranty Hard Drive	574755-B21
HP 1TB 3G SATA 7.2K rpm LFF (3.5-inch) Quick-release Midline 1yr Warranty Hard Drive	574025-B21
HP 500GB 3G SATA 7.2K rpm LFF (3.5-inch) Quick-release Midline 1yr Warranty Hard Drive	574023-B21
NOTE: Please see the QuickSpecs for Technical Specifications and additional information: http://h18000.www1.hp.com/products/quickspecs/13021_div/13021_div.html (Worldwide)	
3G SATA MLC Hot Plug SFF (2.5-inch) Enterprise Mainstream Solid State Drives	
HP 400GB 3G SATA MLC SFF (2.5-inch) Enterprise Mainstream 3yr Warranty Solid State Drive	636597-B21
HP 200GB 3G SATA MLC SFF (2.5-inch) Enterprise Mainstream 3yr Warranty Solid State Drive	636595-B21
HP 100GB 3G SATA MLC SFF (2.5-inch) Enterprise Mainstream 3yr Warranty Solid State Drive	636593-B21
3G SATA MLC Quick Release SFF (2.5-inch) Enterprise Mainstream Solid State Drives	
HP 400GB 3G SATA MLC SFF (2.5-inch) Quick-release Enterprise Mainstream 3yr Wty Solid State Drive	636625-B21
HP 200GB 3G SATA MLC SFF (2.5-inch) Quick-release Enterprise Mainstream 3yr Wty Solid State Drive	636623-B21

Core Options

	HP 100GB 3G SATA MLC SFF (2.5-inch) Quick-release Enterprise Mainstream 3yr Wty Solid State Drive	636621-B21
	6G SAS SLC Hot Plug Enterprise Performance Solid State Drives	
	HP 400GB 6G SAS SLC SFF (2.5-inch) Enterprise Performance 3yr Warranty Solid State Drive	632494-B21
	HP 200GB 6G SAS SLC SFF (2.5-inch) Enterprise Performance 3yr Warranty Solid State Drive	632492-B21
	6G SAS MLC Hot Plug Enterprise Mainstream Solid State Drives	
	HP 800GB 6G SAS MLC SFF (2.5-inch) Enterprise Mainstream 3yr Warranty Solid State Drive	632506-B21
	HP 400GB 6G SAS MLC SFF (2.5-inch) Enterprise Mainstream 3yr Warranty Solid State Drive	632504-B21
	HP 200GB 6G SAS MLC SFF (2.5-inch) Enterprise Mainstream 3yr Warranty Solid State Drive	632502-B21
	RECOMMENDATION: For best performance of SSD drives it is recommended that any Smart Array Controller use a max of 4 drives. For this product a second Smart Array option can be used for the second set of 4 SSD drives. **NOTE:** Please see the QuickSpecs for Technical Specifications and additional information: http://h18000.www1.hp.com/products/quickspecs/14038_div/14038_div.html **NOTE:** HP P212 SAS 4HDD Cable Kit (574001-B21) is needed when adding more than two 2.5" hard drives. **NOTE:** The non-hot plug hard drives use a quick release carrier. **NOTE:** When Adding SAS to the 4U, the SL390s 4U SAS enablement kit (641764-B21) plus an HP Smart Array controller must be ordered **NOTE:** When Adding SAS to the 2U, the SL390s 2U SAS enablement kit (620000-B21) plus an HP Smart Array controller must be ordered **NOTE:** When Adding SAS to the 1U one of 4 options needs to be added HP 2x170 P212 SAS 2 Hard Drive Power Cable Kit **NOTE:** this is required when add two 3.5" SAS drive to the 1U tray. 589234-B21 HP z6000 P212 SAS 4 Hard Drive Power Cable Kit **NOTE:** this is required when add four 3.5" SAS drive to the 1U tray. 574001-B21 **NOTE:** Hot plug hard drives are for 2U and 4U tray only. **NOTE:** non hot plug with quick release carrier are used in 1U tray and internal to the 2U tray.	
HP Networking	**Gigabit Ethernet Adapters**	
	HP NC112T PCI Express Gigabit Server Adapter	503746-B21
	HP NC360T PCI-E Dual Port Gigabit Server Adapter	412648-B21
	HP NC365T 4-port Ethernet Server Adapter	593722-B21
	HP NC373F PCI-E Multifunction 1000SX Gigabit Svr Adapter	394793-B21
	HP NC373T PCI-E Multifunction Gigabit Server Adapter	394791-B21
	HP NC375T PCI Express Quad Port Gigabit Server Adapter	538696-B21
	HP NC382T PCI Express Dual Port Multifunction Gigabit Server Adapter	458492-B21
	10 Gigabit Ethernet adapters **NOTE:** The SL390s G7 supports only the low-profile version of the 10GbE Ethernet Adapters. **NOTE:** A minimum of two Gigabytes (2 GB) of server memory is required per each adapter. **NOTE:** Direct Attach Cable (DAC) for copper environments or fiber transceivers and cables for fiber-optic environments must be purchased separately.	

Core Options

	HP NC522SFP Dual Port 10GbE Gigabit Server Adapter	468332-B21
	HP NC550SFP Dual Port 10GbE Server Adapter	581201-B21
	HP NC552SFP 10Gb 2-port Ethernet Server Adapter	614203-B21
	NOTE: Please see the QuickSpecs for Technical Specifications and additional information: www.hp.com/go/ProLiantNICs	
	HP 10 GbE PCI-e G2 Dual Port Network Interface Card	516937-B21
HP InfiniBand	HP InfiniBand 4X QDR ConnectX-2 PCIe G2 Dual Port HCA	592520-B21
	QLogic InfiniBand 4X QDR PCI-E G2 Dual Port HCA	583211-B21
	HP InfiniBand Enablement Kit	614841-B21
	NOTE: Please see the QuickSpecs for additional information: http://h18000.www1.hp.com/products/quickspecs/13078_div/13078_div.html	
HP I/O Expansion Options	HP SL390 2 Graphics Processing Unit Riser Kit	614839-B21
	HP SL390 Single Graphics Processing Unit Riser Kit	614840-B21

Additional Options

NOTE: Some options may not be integrated at the factory. To ensure only valid configurations are ordered, HP recommends the use of an HP approved configurator. Contact your local sales representative for additional information.

HP Insight Software	**HP Insight Control**	
	HP Insight Control including 1yr 24x7 Technical Support and Updates Flexible Quantity License	452149-B22
	HP Insight Management Media Kit **NOTE:** HP Insight Management Media Kit contains DVDs without licenses. Contains HP Systems Insight Manager, HP Insight Control, HP Matrix Operating Environment, and Virtual Connect Enterprise Manager software. Uses an integrated installer to perform quick and accurate software installation and updates.	436222-B21
	HP Integrated Lights-Out (iLO) Advanced for ProLiant Remote Management	
	HP iLO Advanced including 1yr 24x7 Technical Support and Updates Electronic License	TA850AAE
	HP iLO Advanced Electronic License with 3yr 24x7 Tech Support and Updates	BD506AAE
	HP iLO Advanced including 1yr 24x7 Technical Support and Updates Flexible Quantity License	512486-B21
	HP iLO Advanced Flexible Qty License with 3yr 24x7 Tech Support and Updates	BD506A
	HP iLO Advanced including 1yr 24x7 Technical Support and Updates Tracking License	512487-B21
	HP iLO Advanced Tracking License with 3yr 24x7 Tech Support and Updates	BD507A
	NOTE: This license allows 1 server to be deployed and managed via HP iLO Advanced. Customer will receive a printed license entitlement certificate via physical shipment. The license entitlement certificate must be redeemed online or via fax in order to obtain the license activation key(s). Includes one year of 24 x 7 HP Software Technical Support Service. **NOTE:** For additional license kits, including electronic delivery options, please see the iLO QuickSpecs at: http://h18004.www1.hp.com/products/quickspecs/14276_div/14276_div.html	
	HP Insight Control server deployment	
	HP Insight Control Server Deployment including 1yr 24x7 Support Electronic License	T9082AAE
	HP Insight Control Server Deployment including 1yr 24x7 Support Single Server License	452151-B21
	NOTE: Electronic and Flexible-Quantity licenses can be used to purchase multiple licenses with a single activation key. **NOTE:** Customer will receive a license entitlement certificate. The license entitlement certificate must be redeemed online or via fax in order to obtain the license activation key(s). Includes one year of 24 x 7 HP Software Technical Support and Update Service. **NOTE:** Licenses ship without media. The HP Insight Management Media Kit can be ordered separately, or can be downloaded at: http://www.hp.com/go/insightupdates. **NOTE:** For additional license options please see the Insight Control QuickSpecs at: http://h18000.www1.hp.com/products/quickspecs/12631_div/12631_div.html	
High Performance Clusters	**HP Cluster Management Utility**	
	HP Insight Cluster Management Utility 1yr 24x7 Flexible License **NOTE:** This part number can be used to purchase one certificate for multiple licenses with a single activation key. Each license is for one node (server). Customer will receive a printed end user license agreement and license entitlement certificate via physical shipment. The license entitlement certificate must be redeemed online in order to obtain a license key.	QL803B

Additional Options

	HP Insight Cluster Management Utility 3yr 24x7 Flexible License **NOTE:** These part numbers can be used to purchase one certificate for multiple licenses and support with a single activation key. Each license is for one node (server). Customer will receive a printed end user license agreement and license entitlement certificate via physical shipment. The license entitlement certificate must be redeemed online in order to obtain a license key. Customer also will receive a support agreement.	BD476A
	HP Insight Cluster Management Utility Media	BD477A
	NOTE: For additional license kits please see the QuickSpecs at: http://h18004.www1.hp.com/products/quickspecs/12612_div/12612_div.html	
	HP HPC Linux Value Pack	
	HP High Performance Computing Linux Value Pack 1 Processor Flexible License for ProLiant Servers **NOTE:** This part number can be used to purchase one certificate for multiple licenses with a single activation key. Each license is for one socket (a.k.a. processor). Customer will receive a printed end user license agreement and license entitlement certificate via physical shipment. The license entitlement certificate must be redeemed online in order to obtain a license key.	TC293B
	HP High Performance Computing Linux Value Pack Media Kit for ProLiant Servers **NOTE:** This part number can be used to purchase media including software and documentation, which will be delivered to the customer.	TC294A
	NOTE: For additional license kits please see the QuickSpecs at: http://h18004.www1.hp.com/products/quickspecs/13485_div/13485_div.html	
GPU Computing Modules	**NOTE:** The Tesla modules can only be accommodated in SL390s 2U or 4U trays. **NOTE:** When only one Tesla module is to be configured in a 2U tray, a GPU Riser Kit (single GPU or 2 GPU) must be ordered. **NOTE:** When two Tesla modules are to be configured in a 2U tray, either order one 2 GPU Riser kit, or order one single GPU Riser Kit plus a 2 GPU Riser Kit. In the second case, one Tesla module would be placed in each of the two Riser Kits, resulting in increased total GPU bandwidth. **NOTE:** When three Tesla modules (the maximum allowed) are to be configured in a 2U tray, order one single GPU Riser Kit plus a 2 GPU Riser Kit. **NOTE:** Power supplies must be configured to accommodate the power requirements of the Tesla modules. For example, the M2075 modules each have a peak power requirement of 225 watts. **NOTE:** The ambient temperature for SL390s 2U systems with between one and three NVIDIA M2090 GPUs, must be 30 degrees Celsius or less. The ambient temperature for SL390s 4U systems with between five and eight NVIDIA M2090 GPUs, must be 30 degrees Celsius or less. All other SL390s systems may be operated with ambient temperatures up to 35 degrees Celsius. **NOTE:** When adding GPU solutions to the SL390 2U & 4U servers one must utilize the HP 1200W CS Platinum Power Supply Kit, 578322-B21, for all four power supply slots.	
	NVIDIA Tesla M2070 6GB Module	SH886A
	NVIDIA Tesla M2070Q 6GB GPU Graphics Module	A0C39A
	NVIDIA Tesla M2090 6GB Module	A0J99A
	NVIDIA Tesla M2075 6GB Computational Module	A0R41A
	NOTE: For additional license kits please see the QuickSpecs at: http://h18004.www1.hp.com/products/quickspecs/13743_div/13743_div.html	
HP Storage Controllers	**SAS Controllers**	

Additional Options

Smart Array P212 Controller	
HP Smart Array P212/ZM 1-ports Int/1-ports Ext PCIe x8 SAS Controller	462828-B21
HP Smart Array P212/256 1-ports Int/1-ports Ext PCIe x8 SAS Controller	462834-B21
Smart Array P410 Controller	
HP Smart Array P410/256 2-ports Int PCIe x8 SAS Controller	462862-B21
HP Smart Array P410/512 BBWC 2-ports Int PCIe x8 SAS Controller	462864-B21
HP Smart Array P410/512 FBWC 2-ports Int PCIe x8 SAS Controller	578230-B21
HP Smart Array P410/1G FBWC 2-ports Int PCIe x8 SAS Controller	572532-B21
Smart Array P411 Controller	
HP Smart Array P411/256 2-ports Ext PCIe x8 SAS Controller	462830-B21
HP Smart Array P411/512 BBWC 2-ports Ext PCIe x8 SAS Controller	462832-B21
HP Smart Array P411/512 FBWC 2-ports Ext PCIe x8 SAS Controller	578229-B21
HP Smart Array P411/1G FBWC 2-ports Ext PCIe x8 SAS Controller	572531-B21
Optional Upgrades	
HP 256MB P-series Cache Upgrade	462968-B21
HP 512MB P-Series Battery Backed Write Cache Upgrade	462967-B21
HP 1GB Flash Backed Cache	534562-B21
HP 512MB Flash Backed Write Cache	534916-B21
HP 650 mAh P-Series Battery **NOTE:** HP z6000 BBWC HDWR KIT (582653-B21) is required when adding BBWC **NOTE:** To enable BBWC on the 256MB cache.	462969-B21
HP z6000 P212 SAS 4 Hard Drive Power Cable Kit	574001-B21
HP z6000 Battery Back Write Cache Hardware Kit	582653-B21
HP 2x170 P212 SAS 2 Hard Drive Power Cable Kit	589234-B21
HP Smart Array Advanced Pack including 1yr 24x7 Technical Support and Updates Single Server License **NOTE:** This part number can be used to purchase a single license or to order multiple licenses with a single activation key. Customers will receive a license entitlement certificate via e-mail. The license entitlement certificate must be redeemed online or via fax in order to obtain the license activation key(s). Include one year of 24x7 HP Software Technical Support Services. **NOTE:** Please see the QuickSpecs for Technical Specifications and additional information: http://h18000.www1.hp.com/products/quickspecs/13203_div/13203_div.html (Smart Array P212 Controller) http://h18000.www1.hp.com/products/quickspecs/13201_div/13201_div.html (Smart Array P410 Controller) http://h18000.www1.hp.com/products/quickspecs/13202_div/13202_div.html (Smart Array P411 Controller) http://h18000.www1.hp.com/products/quickspecs/13200_div/13200_div.html (Smart Array Advanced Pack)	516471-B21
SCSI HBA	
HP SC11Xe Ultra320 Single Channel/ PCIe x4 SCSI Host Bus Adapter **NOTE:** Recommended HBA for SCSI tape drive connect. **NOTE:** Please see the QuickSpecs for additional information: http://h18000.www1.hp.com/products/quickspecs/12566_div/12566_div.html (SC11Xe HBA)	412911-B21

HP Tape Backup **NOTE:** For the complete range of tape drives, autoloaders, libraries and media see:

Additional Options

	http://www.hp.com/go/tape. For hardware and software compatibility of HP tape backup products see: http://www.hp.com/storage/SPOCK	
	HP StoreEver LTO-6 Ultrium 6250 Tape Drive in 1U Rack-mount Kit	C0L99A
	HP StoreEver LTO-6 Ultrium 6650 Internal Tape Drive	EH963A
	HP StoreEver LTO-6 Ultrium 6650 External Tape Drive	EH964A
	HP StoreEver LTO-6 Ultrium 6250 Internal Tape Drive	EH969A
	HP StoreEver LTO-6 Ultrium 6250 External Tape Drive	EH970A
HP Storage Options	**Storage Fibre Channel HBA** **NOTE:** The following is a list of all Fibre Channel Host Bus Adapters for Windows and Linux. For detailed compatibility information please see: http://h18006.www1.hp.com/storage/saninfrastructure/hba.html	
	Brocade Fibre Channel HBAs	
	HP 81B 8Gb 1-port PCIe Fibre Channel Host Bus Adapter	AP769B
	HP 82B 8Gb 2-port PCIe Fibre Channel Host Bus Adapter	AP770B
	HP 41B 4Gb 1-port PCIe Fibre Channel Host Bus Adapter	AP767B
	HP 42B 4Gb 2-port PCIe Fibre Channel Host Bus Adapter	AP768B
	Emulex Fibre Channel HBAs	
	HP 81E 8Gb 1-port PCIe Fibre Channel Host Bus Adapter	AJ762A
	HP 82E 8Gb 2-port PCIe Fibre Channel Host Bus Adapter	AJ763A
	HP FC2142SR 4Gb 1-port PCIe Fibre Channel Host Bus Adapter	A8002A
	HP FC2242SR 4Gb 2-port PCIe Fibre Channel Host Bus Adapter	A8003A
	HP SN1000E 16Gb 2-port PCIe Fibre Channel Host Bus Adapter	QR559A
	HP SN1000E 16Gb 1-port PCIe Fibre Channel Host Bus Adapter	QR558A
	QLogic Fibre Channel HBAs	
	HP 81Q 8Gb 1-port PCIe Fibre Channel Host Bus Adapter	AK344A
	HP 82Q 8Gb 2-port PCIe Fibre Channel Host Bus Adapter	AJ764A
	HP FC1142SR 4Gb 1-port PCIe Fibre Channel Host Bus Adapter	AE311A
	HP FC1242SR 4Gb 2-port PCIe Fibre Channel Host Bus Adapter	AE312A
	Converged Network Adapter	
	HP CN1100E Dual Port Converged Network Adapter	BK835A
	HP CN1000E Dual Port Converged Network Adapter	AW520B
HP Uninterruptible Power Systems	**HP Rack-mountable UPS**	
	HP R1500 G3 Uninterruptible Power Supply (UPS)	
	HP R1.5kVA G3 1U INTL Uninterruptible Power System	AF471A
	HP R1.5kVA G3 1U JP/TW Uninterruptible Power System	AF470A
	HP R1.5kVA G3 1U NA Uninterruptible Power System	AF469A
	NOTE: Please see the QuickSpecs for additional information: http://h18000.www1.hp.com/products/quickspecs/14059_div/14059_div.html (Worldwide)	
	HP R/T3000 G2 Uninterruptible Power System (UPS)	
	HP R/T3000 G2 2U Detachable Cord High Voltage INTL Uninterruptible Power System	AF468A
	HP R/T3000 G2 2U L530 Low Voltage NA/JP Uninterruptible Power System	AF466A
	HP R/T3000 G2 2U L620 High Voltage NA/JP Uninterruptible Power System	AF467A
	NOTE: Please see the QuickSpecs for additional information:	

Additional Options

	http://h18000.www1.hp.com/products/quickspecs/14058_div/14058_div.html (Worldwide)	
	R5000 Uninterruptible Power System (UPS)	
	HP R5KVA 3U IEC309-32A High Voltage INTL Uninterruptible Power System	AF461A
	HP R5KVA 3U L630 High Voltage NA/JP Uninterruptible Power System	AF460A
	NOTE: Please see the QuickSpecs for additional information: http://h18000.www1.hp.com/products/quickspecs/14109_div/14109_div.html (Worldwide)	
	R7000 Uninterruptible Power System (UPS)	
	HP R7KVA 4U 50A High Voltage NA/JP Uninterruptible Power System	AF462A
	HP R7KVA 4U IEC-32A High Voltage INTL Uninterruptible Power System	AF463A
	NOTE: Please see the QuickSpecs for additional information: http://h18000.www1.hp.com/products/quickspecs/14110_div/14110_div.html (Worldwide)	
	NOTE: For additional information on sizing your HP UPS, please reference: http://www.upssizer.com	
	NOTE: Please see the UPS and PDU cable matrix's on the HP Power Protection and Management page. Under Power Cords, click on the "HP Power Cord Matrix" link. That link will list cable descriptions, requirements, and specifications for UPS and PDU units. Please see the following link: www.hp.com/products/powercords.	
	NOTE: For additional information on HP Uninterruptible Power Systems please go to: www.hp.com/servers/rackups.	
HP Power Distribution Units	**HP Monitored Power Distribution Unit: Full Rack Version**	
	HP 8.6kVA 24A Single Input Three Phase NA/JP Monitored Power Distribution Unit	AF504A
	HP 8.3kVA 40A Single Input Single Phase NA/JP Monitored Power Distribution Unit	AF506A
	HP 11kVA 16A Single Input Three Phase INTL Monitored Power Distribution Unit	AF508A
	HP 7.3kVA 32A Single Input Single Phase INTL Monitored Power Distribution Unit	AF510A
	HP Monitored Power Distribution Unit: Half Rack Version	
	HP 4.9kVA 24A Single Input Single Phase NA/JP Monitored Power Distribution Unit	AF914A
	HP 7.3kVA 32A Single Input Single Phase INTL Monitored Power Distribution Unit	AF915A
	NOTE: Please see the following QuickSpecs for additional information: http://h18000.www1.hp.com/products/quickspecs/12118_div/12118_div.html (Worldwide)	
	Modular PDUs 1U/0U **NOTE:** 1U/0U mounting brackets shipped with the unit (optimized for 10000 G2 and 9000 series racks).	
	HP 3.6kVA 16A High Voltage INTL Modular Power Distribution Unit	252663-B24
	HP 4.9kVA 24A High Voltage NA/JP Modular Power Distribution Unit	252663-D72
	HP 2.8kVA 24A Low Voltage NA/JP Modular Power Distribution Unit	252663-D71
	HP 7.3kVA 32A High Voltage INTL Modular Power Distribution Unit	252663-B31
	NOTE: For additional information on HP Power Distribution Units including accessories please go to: www.hp.com/go/pdu. **NOTE:** Please see the UPS and PDU cable matrix's on the HP Power Protection and Management page. Under Power Cords, click on the "HP Power Cord Matrix" link. That link will list cable descriptions, requirements, and specifications for UPS and PDU units. Please see the following link: www.hp.com/products/powercords. **NOTE:** This PDU has a detachable input power cord and allows for adaptability to country specific power requirements.	

Additional Options

NOTE: Please see the following QuickSpecs for additional options including shorter jumper cables and country specific power cords:
http://h18000.www1.hp.com/products/quickspecs/11041_div/11041_div.html (Worldwide)

HP Intelligent Power Distribution Units (iPDU)	**iPDU Core Units**	
	HP 4.9kVA 24A Single Phase NA/JP Core Intelligent Modular Power Distribution Unit	AF520A
	HP 8.6kVA 24A Three Phase NA/JP Core Intelligent Modular Power Distribution Unit	AF522A
	HP 7.3kVA 32A Single Phase INTL Core Intelligent Modular Power Distribution Unit	AF525A
	HP 11kVA 16A Three Phase INTL Core Intelligent Modular Power Distribution Unit	AF526A
	iPDU Extension Bars	
	HP 5xC13 Intelligent PDU Extension Bar G2 Kit	AF547A
	HP 5xC13 Outlets Power and UID LEDs Pair Standard Extension Bar	AF528A
	NOTE: Please see the QuickSpecs for Technical Specifications and additional information: http://h18000.www1.hp.com/products/quickspecs/13650_div/13650_div.html (Worldwide)	
HP Rack Options	**HP USB Keyboard and Mouse**	
	HP USB BFR with PVC Free US Keyboard/Mouse Kit	631341-B21
	HP USB BFR with PVC Free UK Keyboard/Mouse Kit	631344-B21
	HP USB BFR with PVC Free FR Keyboard/Mouse Kit	631346-B21
	HP USB BFR with PVC Free ES Keyboard/Mouse Kit	631348-B21
	HP USB BFR with PVC Free DE Keyboard/Mouse Kit	631358-B21
	HP USB BFR with PVC Free JP Keyboard/Mouse Kit	631360-B21
	HP USB BFR with PVC Free IT Keyboard/Mouse Kit	631362-B21
	HP USB BFR with PVC Free CN Keyboard/Mouse Kit	631364-B21
	HP USB BFR with PVC Free AE Keyboard/Mouse Kit	638212-B21
	HP USB BFR with PVC Free RU Keyboard/Mouse Kit	638214-B21
	HP USB BFR with PVC Free AP-Intl Keyboard/Mouse Kit	672097-373
	HP USB BFR with PVC Free Intl Keyboard/Mouse Kit	672097-B33
	HP USB BFR with PVC Free PT Keyboard/Mouse Kit	672097-133
	HP USB BFR with PVC Free TR Keyboard/Mouse Kit	672097-143
	HP USB BFR with PVC Free CZ Keyboard/Mouse Kit	672097-223
	HP USB BFR with PVC Free FI Keyboard/Mouse Kit	672097-353
	HP USB BFR with PVC Free SE Keyboard/Mouse Kit	672097-103
	HP USB BFR with PVC Free CH Keyboard/Mouse Kit	672097-113
	HP USB BFR with PVC Free KR Keyboard/Mouse Kit	672097-KD3
	HP USB BFR with PVC Free IN Keyboard/Mouse Kit	672097-D63
	NOTE: Please see the QuickSpecs for Technical Specifications and additional information: http://h18000.www1.hp.com/products/quickspecs/13972_div/13972_div.html (Worldwide)	
	HP TFT7600 G2 KVM Console Rackmount Keyboard Monitor	
	HP TFT7600 G2 KVM Console Rackmount Keyboard US Monitor	AZ870A
	HP TFT7600 G2 KVM Console Rackmount Keyboard UK Monitor	AZ871A
	HP TFT7600 G2 KVM Console Rackmount Keyboard DE Monitor	AZ872A

Additional Options

	HP TFT7600 G2 KVM Console Rackmount Keyboard FR Monitor	AZ873A
	HP TFT7600 G2 KVM Console Rackmount Keyboard IT Monitor	AZ874A
	HP TFT7600 G2 KVM Console Rackmount Keyboard ES Monitor	AZ875A
	HP TFT7600 G2 KVM Console Rackmount Keyboard DK Monitor	AZ876A
	HP TFT7600 G2 KVM Console Rackmount Keyboard NO Monitor	AZ877A
	HP TFT7600 G2 KVM Console Rackmount Keyboard SE/FI Monitor	AZ878A
	HP TFT7600 G2 KVM Console Rackmount Keyboard CH Monitor	AZ879A
	HP TFT7600 G2 KVM Console Rackmount Keyboard PT Monitor	AZ880A
	HP TFT7600 G2 KVM Console Rackmount Keyboard BE Monitor	AZ881A
	HP TFT7600 G2 KVM Console Rackmount Keyboard JP Monitor	AZ882A
	HP TFT7600 G2 KVM Console Rackmount Keyboard RU Monitor	AZ883A
	HP TFT7600 G2 KVM Console Rackmount Keyboard Intl Monitor	AZ884A
	HP TFT7600 G2 KVM Console Rackmount Keyboard US TAA Monitor	AZ885A
	NOTE: Please see the QuickSpecs for Technical Specifications and additional information: http://h18000.www1.hp.com/products/quickspecs/13731_div/13731_div.html (Worldwide)	
	HP Server Console Switches	
	HP Server Console 0x2x8 Port Analog Switch	AF616A
	HP Server Console 0x2x16 Port Analog Switch	AF617A
	HP TAA 0x2x16xKVM Server Console G2 Switch	AF626A
	NOTE: Please see the QuickSpecs for Technical Specifications and additional information: http://h18000.www1.hp.com/products/quickspecs/11834_div/11834_div.html (Worldwide)	
	HP Server Console Switch G2 with Virtual Media & CAC	
	HP 0x2x16 KVM Server Console Switch G2 with Virtual Media CAC Software	AF618A
	HP 0x2x32 KVM Server Console Switch G2 with Virtual Media CAC Software	AF619A
	HP KVM CAT5 1-pack USB Interface Adapter	336047-B21
	NOTE: Please see the QuickSpecs for Technical Specifications and additional information: http://h18000.www1.hp.com/products/quickspecs/13475_div/13475_div.html (Worldwide)	
	HP IP Console Switch G2 with Virtual Media & CAC	
	HP 1x4 USB/PS2 KVM Console Switch	AF611A
	HP 1x1Ex8 KVM IP Console Switch G2 with Virtual Media CAC Software	AF620A
	HP 2x1Ex16 KVM IP Console Switch G2 with Virtual Media CAC Software	AF621A
	HP 4x1Ex32 KVM IP Console Switch G2 with Virtual Media CAC Software	AF622A
	NOTE: Please see the QuickSpecs for Technical Specifications and additional information: http://h18000.www1.hp.com/products/quickspecs/13474_div/13474_div.html (Worldwide)	
HP USB and SD Options	HP USB 2-Button Optical Scroll Mouse	DC172B
	HP USB 04 Standard Keyboard	DT528A#ABA
	HP 4GB Micro SDHC Flash Media Kit	647444-B21

Additional Options

HP Care Pack Services	HP 3 year Next business day ProLiant s6500 Hardware Support	UR398E
	HP 3 year Next business day with Defective Media Retention ProLiant s6500 Hardware Support	UR399E
	HP 3 year 4 hour 13x5 ProLiant s6500 Hardware Support	UR400E
	HP 3 year 4 hour 13x5 with Defective Media Retention ProLiant s6500 Hardware Support	UR401E
	HP 3 year 4 hour 24x7 ProLiant s6500 Hardware Support	UR402E
	HP 3 year 4 hour 24x7 with Defective Media Retention ProLiant s6500 Hardware Support	UR403E
	HP 3 year 6 hour 24x7 Call to Repair ProLiant s6500 Hardware Support	UR404E
	HP 3 year 6 hour 24x7 Call to Repair with Defective Media Retention s6500 Hardware Support	UR405E
	HP 3 year 4 hour 24x7 ProLiant s6500 Collaborative Support	U1M52E
	HP 3 year 4 hour 24x7 ProLiant s6500 Proactive Care Service	U3C72E
	HP 3 year Next business day ProLiant s6500 Collaborative Support	U1M46E
	HP 3 year Next business day ProLiant s6500 Proactive Care Service	U3C66E
	HP 4 year Next business day ProLiant s6500 Hardware Support	UR406E
	HP 4 year Next business day with Defective Media Retention ProLiant s6500 Hardware Support	UR407E
	HP 4 year 4 hour 13x5 ProLiant s6500 Hardware Support	UR408E
	HP 4 year 4 hour 13x5 with Defective Media Retention ProLiant s6500 Hardware Support	UR409E
	HP 4 year 4hour 24x7 ProLiant s6500 Hardware Support	UR410E
	HP 4 year 4 hour 24x7 with Defective Media Retention ProLiant s6500 Hardware Support	UR411E
	HP 4 year 6 hour 24x7 Call to Repair ProLiant s6500 Hardware Support	UR412E
	HP 4 year 6 hour Call to Repair 24x7 with Defective Media Retention ProLiant s6500 Hardware Support	UR413E
	HP 5 year Next business day ProLiant s6500 Hardware Support	UR414E
	HP 5 year Next business day with Defective Media Retention ProLiant s6500 Hardware Support	UR415E
	HP 5 year 4 hour 13x5 ProLiant s6500 Hardware Support	UR416E
	HP 5 year 4 hour 13x5 with Defective Media Retention ProLiant s6500 Hardware Support	UR417E
	HP 5 year 4 hour 24x7 ProLiant s6500 Hardware Support	UR418E
	HP 5 year 4 hour 24x7 with Defective Media Retention ProLiant s6500 Hardware Support	UR419E
	HP 5 year 6 hour 24x7 Call to Repair ProLiant s6500 Hardware Support	UR420E
	HP 5 year 6 hour 24x7 Call to Repair with Defective Media Retention s6500 Hardware Support	UR421E
	HP 3 year 24x7 24 hour Call to Repair ProLiant s6500 Hardware Support	UR425E
	HP 3 year 24x7 24 hour Call to Repair with Defective Media Retention ProLiant s6500 Hardware Support	UR426E
	HP 4 year 24x7 24 hour Call to Repair ProLiant s6500 Hardware Support	UR427E
	HP 4 year 24x7 24 hour Call to Repair with Defective Media Retention ProLiant s6500 Hardware Support	UR428E
	HP 5 year 24x7 24 hour Call to Repair ProLiant s6500 Hardware Support	UR429E

Additional Options

HP 5 year 24x7 24 hour Call to Repair with Defective Media Retention ProLiant s6500 Hardware Support **NOTE:** For more information, customer/resellers can contact: http://www.hp.com/services/carepack.	UR430E

Memory

HP ProLiant SL390s G7 Server

NOTE: Memory configurations listed do not apply to "Factory Integrated Models".
NOTE: Chart does not represent all possible memory configurations.

DDR3 memory population guidelines

For detailed memory configuration rules and guidelines, please use the Online DDR3 Memory Configuration Tool: www.hp.com/go/ddr3memory-configurator

Some DIMM installation guidelines are summarized below:

- For servers with Twelve (12) memory slots
- There are three (3) channels per processor; six (6) channels per server
- There are two (2) DIMM slots per memory channel; (12) total slots
- DIMM slots that are white should be populated first
- Do not mix Unbuffered memory (UDIMMs) with Registered memory (RDIMMs)
- Do not install DIMMs if the corresponding processor is not installed
- If only one processor is installed in a 2CPU system, only half of the DIMM slots are available
- To maximize performance, balance the total memory capacity between all installed processors
- It is not required, but it is recommended to load the channels similarly if possible
- You can only have up to eight (8) ranks installed per channel
- You can only install two quad-rank DIMMs per channel
- You can only install two UDIMMs per channel; if available, the third slot in the channel must remain empty
- Populate DIMMs from heaviest load (quad-rank) to lightest load (single-rank) within a channel
- Heaviest load (DIMM with most ranks) within a channel goes furthest from the chipset
- If mixing DIMM voltage is a requirement, please note that the DIMMs will run at 1.5V since all 1.35V are capable of supporting 1.5V operations

DIMM slot/capacity/populated speed table												
DIMM Type	**Registered DIMMS (RDIMMs)**									**Unbuffered with ECC DIMMs (UDIMMs)**		
DIMM Rank	**Single Rank (1R)**	**Dual Rank (2R)**					**Quad Rank (4R)**			**Single Rank (1R)**	**Dual Rank (2R)**	
DIMM Capacity	4GB	2GB	4GB	8GB	8GB	16GB	4GB	16GB	32GB	1GB	2GB	4GB
DIMM Native Speed (MHz)	1333	1333	1333	1066	1333	1333	1066	1066	1066	1333	1333	1333
	SLOTS THAT CAN BE POPULATED											
12 slot servers	12	12	12	12	12	12	12	12	12	12	12	12
	MAXIMUM CAPACITY (GB)											
	48	24	48	96	96	192	48	192	384	12	24	48
	POPULATED DIMM SPEED (MHz)											
1 DIMM Per Channel	1333	1333	1333	1066	1333	1333	1066	1066	1066	1333	1333	1333
2 DIMM Per Channel	1333*	1333*	1333*	1066	1333*	1066/ 1333**	800	800	800	1333	1333	1333*
*Supported at 1333 via setting in ROM based setup utility (RBSU)												

Memory

**2DPC: LV runs at 1066, Std voltage runs at 1333

NOTES:

- PC3-10600 DIMMs have a maximum speed of 1333MHz. PC3-8500 DIMMs have a maximum speed of 1066MHz
- Mixing DIMM speeds is allowed, but the system processor speed rules always override the DIMM capabilities
- If you do mix DIMM speeds, the memory bus will default to the minimum clock rate of all DIMMs in the system - even if the slower DIMM is on the other processor
- If you install 1x 1066MHz DIMM in channel 1 and 1x 1333MHz DIMM in channel 2, the maximum speed will be 1066MHz If you install 1x 1066MHz DIMM in channel 1 and 5x 1333MHz DIMMs with 1 DIMM Per Channel (DPC) in each of the other channels, the maximum speed will be 1066MHz
- Maximum memory speed will also depend on the processor installed
- References to the above MHz speeds are for the various speeds of DDR3 DIMMs; 1333 refers to DDR3-1333, etc.

DIMM slot and configuration diagrams
Basic memory slot & population diagram

- Population order; start with "A" first, "B" second, "C" third, etc.

12 DIMM SLOTS (8 per CPU node)					
	CPU1		CPU2		
	slot #	population order	slot #	population order	
Chnl 1	1	A	1	A	Chnl 1
	2	D	2	D	
Chnl 2	3	B	3	B	Chnl 2
	4	E	4	E	
Chnl 3	5	C	5	C	Chnl 3
	6	F	6	F	

Standard memory configuration (1 CPU model)

- 6GB, consisting of three (3) 2GB dual-rank PC3-10600E UDIMMs

	CPU1		CPU2		
	slot #	population order	slot #	population order	
Chnl 1	1	A; 2GB DIMM	1	A; empty	Chnl 1
	2	D; empty	2	D; empty	
Chnl 2	3	B; 2GB DIMM	3	B; empty	Chnl 2
	4	E; empty	4	E; empty	
Chnl 3	5	C; 2GB DIMM	5	C; empty	Chnl 3
	6	F; empty	6	F; empty	

Memory

Standard memory plus optional memory (1 CPU model)

- 12GB, consisting of three (3) 2GB UDIMMs plus three (3) 2GB UDIMMs
  - 6x 2GB dual-rank PC3-10600E UDIMMs

	CPU1		CPU2		
	slot #	population order	slot #	population order	
Chnl 1	1	A; 2GB DIMM	1	A; empty	Chnl 1
	2	D; 2GB DIMM	2	D; empty	
Chnl 2	3	B; 2GB DIMM	3	B; empty	Chnl 2
	4	E; 2GB DIMM	4	E; empty	
Chnl 3	5	C; 2GB DIMM	5	C; empty	Chnl 3
	6	F; 2GB DIMM	6	F; empty	

Standard memory replaced with optional memory (1 CPU model)
RDIMM maximum configuration

- 96GB, consisting of eight (8) 16GB dual-rank PC3-8500 RDIMMs

	CPU1		CPU2		
	slot #	population order	slot #	population order	
Chnl 1	1	A; 16GB DIMM	1	A; empty	Chnl 1
	2	D; 16GB DIMM	2	D; empty	
Chnl 2	3	B; 16GB DIMM	3	B; empty	Chnl 2
	4	E; 16GB DIMM	4	E; empty	
Chnl 3	5	C; 16GB DIMM	5	C; empty	Chnl 3
	6	F; 16GB DIMM	6	F; empty	

Standard memory replaced with optional memory (2 CPU model)
RDIMM maximum configuration

- 384GB, consisting of twelve (12) 32GB PC3-8500 RDIMMs

	CPU1		CPU2		
	slot #	population order	slot #	population order	
Chnl 1	1	A; 32GB DIMM	1	A; 32GB DIMM	Chnl 1
	2	D; 32GB DIMM	2	D; 32GB DIMM	
Chnl 2	3	B; 32GB DIMM	3	B; 32GB DIMM	Chnl 2
	4	E; 32GB DIMM	4	E; 32GB DIMM	
Chnl 3	5	C; 32GB DIMM	5	C; 32GB DIMM	Chnl 3
	6	F; 32GB DIMM	6	F; 32GB DIMM	

Memory

UDIMM maximum configuration

- 48GB, consisting of twelve (12) 4GB dual-rank PC3-10600 UDIMMs

	CPU1		CPU2		
	slot #	population order	slot #	population order	
Chnl 1	1	A; 4GB DIMM	1	A; 4GB DIMM	Chnl 1
	2	D; 4GB DIMM	2	D; 4GB DIMM	
Chnl 2	3	B; 4GB DIMM	3	B; 4GB DIMM	Chnl 2
	4	E; 4GB DIMM	4	E; 4GB DIMM	
Chnl 3	5	C; 4GB DIMM	5	C; 4GB DIMM	Chnl 3
	6	F; 4GB DIMM	6	F; 4GB DIMM	

NOTE: Capacity references are rounded to the common Gigabyte values.

- 1GB = 1024MB
- 2GB = 2048MB
- 4GB = 4096MB
- 8GB = 8192MB
- 16GB = 16384MB
- 32GB = 32768MB

DDR3 memory options part number decoder

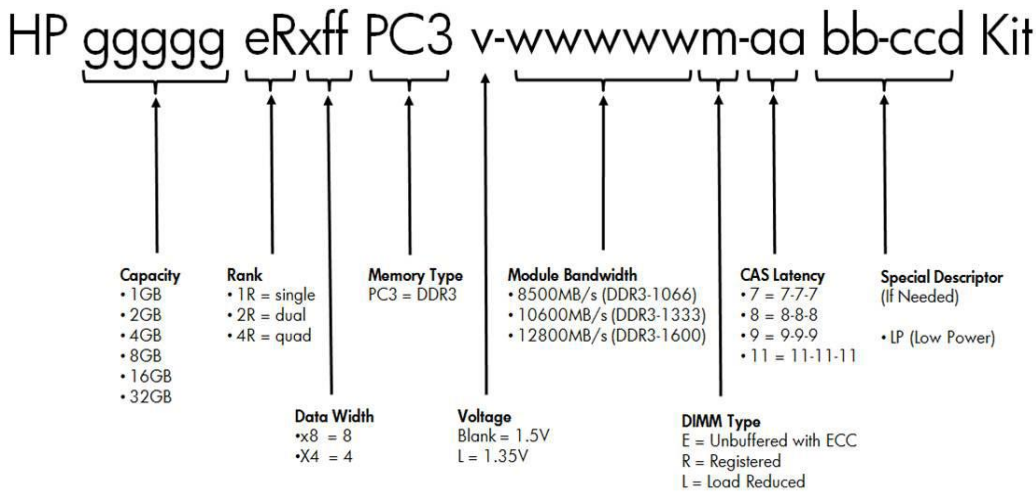

Following are memory options available from HP:

HP Memory	**Registered DIMMs (RDIMMs)**	
	HP 2GB (1x2GB) Dual Rank x8 PC3-10600 (DDR3-1333) Registered CAS-9 Memory Kit	500656-B21
	HP 4GB (1x4GB) Dual Rank x4 PC3-10600 (DDR3-1333) Registered CAS-9 Memory Kit	500658-B21
	HP 4GB (1x4GB) Single Rank x4 PC3-10600 (DDR3-1333) Registered CAS-9 Memory Kit	593339-B21
	HP 4GB (1x4GB) Single Rank x4 PC3L-10600 (DDR3-1333) Registered CAS-9 Low Power Memory Kit	604504-B21

Memory

NOTE: Low Voltage DIMMs can only be used with Intel® Xeon® processor 5600 series processors.

HP 16GB (1x16GB) Quad Rank x4 PC3-8500 (DDR3-1066) Registered CAS-7 Memory Kit	500666-B21
HP 8GB (1x8GB) Dual Rank x4 PC3-10600 (DDR3-1333) Registered CAS-9 Memory Kit	500662-B21
HP 8GB (1x8GB) Dual Rank x4 PC3L-10600 (DDR3-1333) Registered CAS-9 Low Power Memory Kit	604506-B21
HP 16GB (1x16GB) Dual Rank x4 PC3L-10600 (DDR3-1333) Registered CAS-9 LP Memory Kit	627812-B21
HP 32GB (1x32GB) Quad Rank x4 PC3L-8500 (DDR3-1066) Registered CAS-7 LP Memory Kit	627814-B21

NOTE: Low Voltage DIMMs can only be used with Intel® Xeon® processor 5600 series processors.

Unbuffered with ECC DIMMs (UDIMMs)

HP 1GB (1x1GB) Single Rank x8 PC3-10600 (DDR3-1333) Unbuffered CAS-9 Memory Kit	500668-B21
HP 2GB (1x2GB) Dual Rank x8 PC3-10600 (DDR3-1333) Unbuffered CAS-9 Memory Kit	500670-B21
HP 4GB (1x4GB) Dual Rank x8 PC3-10600 (DDR3-1333) Unbuffered CAS-9 Memory Kit	500672-B21
HP 4GB (1x4GB) Dual Rank x8 PC3L-10600 (DDR3-1333) Unbuffered CAS-9 Low Power Memory Kit	619488-B21

NOTE: For detailed memory configuration rules and guidelines, please use the Online DDR3 Memory Configuration Tool: www.hp.com/go/ddr3memory-configurator.

NOTE: There is a maximum support limitation of 8 ranks per memory channel (maximum of 2 quad rank DIMMs per channel)

NOTE: PC3L is a low voltage memory.

NOTE: Memory Min and Max depends on number of processors and type of memory:

1. Processor -> R-Dimm: Min 1 // Max 6 U-Dimm: Min 1 // Max 12
2. Processors -> R-Dimm: Min 2 // Max 6 U-Dimm: Min 2 // Max 12

Storage

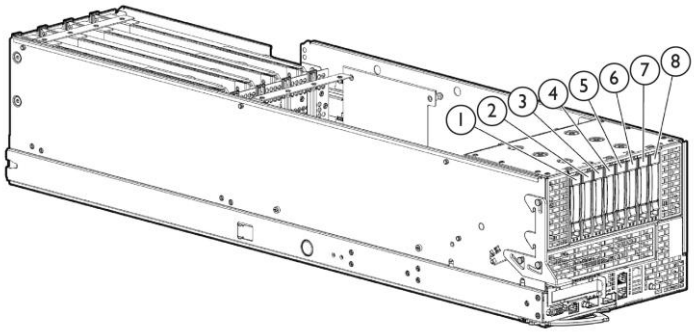

4U Tray

1-8 Up to eight 2.5" hot plug hard drive bays

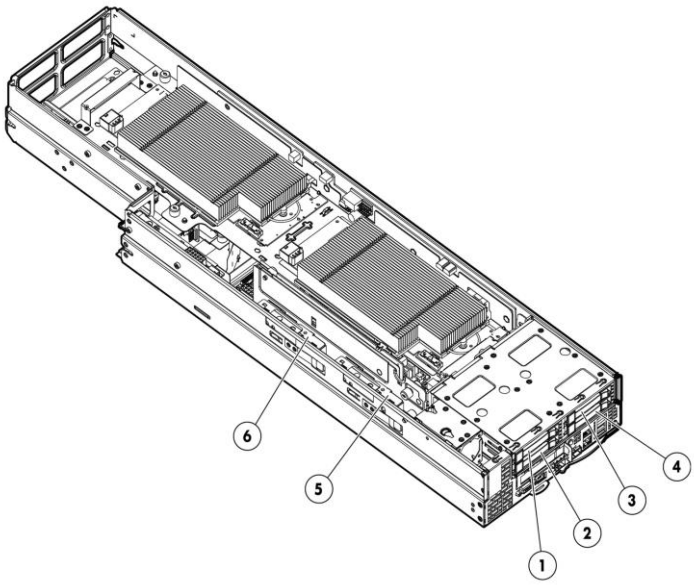

2U Tray

1-4 Up to four 2.5" hot plug hard drive bays

5-6 Up to two 2.5" hard drives use quick release carrier

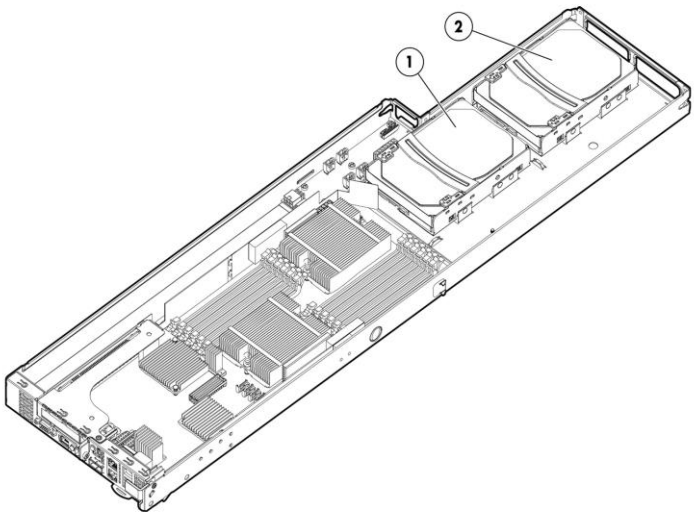

1U Tray

1-2 Up to two 3.5" hard drives use quick release carrier

Storage

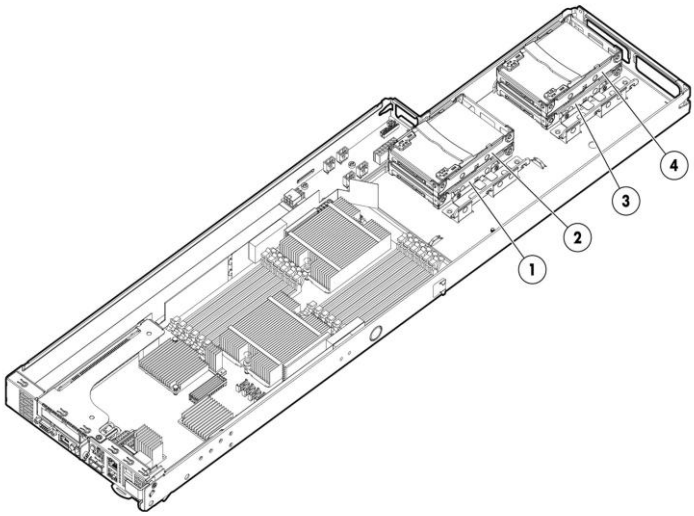

1-4 Up to four 2.5" hard drives use quick release carrier

Drive Support

Hard Drives

NOTE: The components of a storage subsystem (e.g. the drive, the HBA/controller, firmware, and the server backplane) should operate at the same data transfer rate or the system bandwidth will be negotiated down to an acceptable level for all components.

NOTE: Hard drives have either a one year or three year warranty.

4U Tray

SAS Hot Plug SFF (2.5-inch) Enterprise (ENT) Drives

	Quantity Supported	Position Supported	Controller
900GB 6G SAS 10K 600GB 6G SAS 10K 300GB 6G SAS 10K 146GB 6G SAS 15K 146GB 6G SAS 10K	Up to 8	1-8	HP Smart Array P212/Zero Memory Controller HP Smart Array P212/256 MB Controller HP Smart Array P410/256 MB Controller HP Smart Array P410/512 MB BBWC Controller

SAS Hot Plug SFF (2.5-inch) Midline (MDL) Drives

	Quantity Supported	Position Supported	Controller
1TB 6G SAS 7.2K 500GB 6G SAS 7.2K	Up to 8	1-8	HP Smart Array P212/Zero Memory Controller HP Smart Array P212/256 MB Controller HP Smart Array P410/256 MB Controller HP Smart Array P410/512 MB BBWC Controller

SATA Hot Plug SFF (2.5-inch) Midline (MDL) Drives

	Quantity Supported	Position Supported	Controller
500GB 3G SATA 7.2K	Up to 4	1-4	HP Embedded Smart Array B110i SATA RAID Controller (RAID 0, 1, 10)

SATA Hot Plug 2.5" Enterprise Mainstream Solid State Drives

Storage

	Quantity Supported	Position Supported	Controller
400GB 3.0G SATA 200GB 3.0G SATA 100GB 3.0G SATA	Up to 4	1-4	HP Embedded Smart Array B110i SATA RAID Controller (RAID 0, 1, 10)

2U Tray

SAS Hot Plug SFF (2.5-inch) Enterprise (ENT) Drives

	Quantity Supported	Position Supported	Controller
300GB 6G SAS 10K 146GB 6G SAS 15K 146GB 6G SAS 10K 72GB 6G SAS 15K	Up to 4	1-4	HP Smart Array P212/Zero Memory Controller HP Smart Array P212/256 MB Controller HP Smart Array P410/256 MB Controller HP Smart Array P410/512 MB BBWC Controller

SAS Hot Plug SFF (2.5-inch) Midline (MDL) Drives

	Quantity Supported	Position Supported	Controller
500GB 6G SAS 7.2K	Up to 4	1-4	HP Smart Array P212/Zero Memory Controller HP Smart Array P212/256 MB Controller HP Smart Array P410/256 MB Controller HP Smart Array P410/512 MB BBWC Controller

SATA Hot Plug SFF (2.5-inch) Midline (MDL) Drives

	Quantity Supported	Position Supported	Controller
500GB 3G SATA 7.2K 160GB 3G SATA 7.2K	Up to 4	1-4	HP Embedded Smart Array B110i SATA RAID Controller (RAID 0, 1, 10)

SATA Hot Plug Midline (MDL) Solid State Drives

	Quantity Supported	Position Supported	Controller
120GB 3.0G SATA	Up to 4	1-4	HP Embedded Smart Array B110i SATA RAID Controller (RAID 0, 1, 10)

1U Tray

SAS Non-Hot Plug LFF (3.5-inch) Enterprise (ENT) Drives - with quick-release (QR) carrier

	Quantity Supported	Position Supported	Controller
600GB 6G SAS 15K 300GB 6G SAS 15K	Up to 2	1-2	HP Embedded Smart Array B110i SATA RAID Controller (RAID 0, 1, 10)

SAS Non-Hot Plug SFF (2.5-inch) Enterprise (ENT) Drives - with quick-release (QR) carrier

	Quantity Supported	Position Supported	Controller
300GB 6G SAS 10K	Up to 4	1-4	HP Embedded Smart Array B110i SATA RAID Controller (RAID 0, 1, 10)

SAS Non-Hot Plug LFF (3.5-inch) Midline (MDL) Drives - with quick-release (QR) carrier

	Quantity Supported	Position Supported	Controller

Storage

2TB 6G SAS 7.2K	Up to 2	1-2	HP Embedded Smart Array B110i SATA RAID Controller (RAID 0, 1, 10)

SATA Non-Hot Plug LFF (3.5-inch) Midline (MDL) Drives - with quick-release (QR) carrier

	Quantity Supported	Position Supported	Controller
3TB 3G SATA 7.2K 2TB 3G SATA 7.2K 1TB 3G SATA 7.2K 500GB 3G SATA 7.2K	Up to 2	1-2	HP Embedded Smart Array B110i SATA RAID Controller (RAID 0, 1, 10)

SATA Non-Hot Plug SFF (2.5-inch) Midline (MDL) Drives - with quick-release (QR) carrier

	Quantity Supported	Position Supported	Controller
500GB 3G SATA 7.2K	Up to 4	1-4	HP Embedded Smart Array B110i SATA RAID Controller (RAID 0, 1, 10)

6G SAS Hot Plug Enterprise Performance Solid State Drives

	Quantity Supported	Position Supported	Controller
400GB 6G SAS SLC SFF 200GB 6G SAS SLC SFF	Up to 4	1-4	HP Embedded Smart Array B110i SATA RAID Controller (RAID 0, 1, 10)

6G SAS Hot Plug Enterprise Mainstream Solid State Drives

	Quantity Supported	Position Supported	Controller
800GB 6G SAS MLC SFF 400GB 6G SAS MLC SFF 200GB 6G SAS MLC SFF	Up to 4	Up to 4	HP Embedded Smart Array B110i SATA RAID Controller (RAID 0, 1, 10)

Power Specifications

HP 750W Common Slot Gold Hot Plug Power Supply Kit							
Part Number	512327-B21						
Input Voltage Range (V rms)	100 to 240						
Frequency Range (Nominal) (Hz)	50/60						
Nominal Input Voltage (Vrms)	**100**	**120**	**200**	**208**	**220**	**230**	**240**
Maximum Rated Output Wattage Rating	750	750	750	750	750	750	750
Nominal Input Current (A rms)	8.9	7.4	4.3	4.1	3.9	3.7	3.6
Maximum Rated Input Wattage Rating (Watts)	857	847	824	824	820	820	820
Maximum Rated VA (Volt-Amp)	894	884	859	854	854	854	
Efficiency (%)	87.5	88.5	91	91	91.5	91.5	91.5
Power Factor	0.97						
Leakage Current (mA)	0.42	0.50	0.83	0.87	0.92	0.96	1.00
Maximum Inrush Current (A peak)	30						
Maximum Inrush Current duration (mS)	20						
Maximum British Thermal Unit Rating (BTU-Hr)	2925	2892	2812	2812	2797	2797	2797

HP 750W Common Slot Platinum Hot Plug Power Supply Kit							
Part Number	593831-B21						
Input Voltage Range (V rms)	100 to 240						
Frequency Range (Nominal) (Hz)	50/60						
Nominal Input Voltage (Vrms)	**100**	**120**	**200**	**208**	**220**	**230**	**240**
Maximum Rated Output Wattage Rating	750	750	750	750	750	750	750
Nominal Input Current (A rms)	8.6	7.1	4.2	4.0	3.8	3.6	3.4
Maximum Rated Input Wattage Rating (Watts)	841	828	809	808	807	806	805
Maximum Rated VA (Volt-Amp)	863	850	830	829	828	827	826
Efficiency (%)	89.2	90.6	92.7	92.8	93	93.1	93.2
Power Factor	0.985						
Leakage Current (mA)	0.42	0.50	0.83	0.87	0.92	0.96	1.00
Maximum Inrush Current (A peak)	30						
Maximum Inrush Current duration (mS)	20						
Maximum British Thermal Unit Rating (BTU-Hr)	2868	2825	2761	2757	2753	2749	2747

HP 1200W Common Slot Silver Hot Plug Power Supply Kit							
Part Number	500172-B21						
Input Voltage Range (V rms)	100 to 240						
Frequency Range (Nominal) (Hz)	50/60						
Nominal Input Voltage (Vrms)	**100**	**120**	**200**	**208**	**220**	**230**	**240**
Maximum Rated Output Wattage Rating	800	900	1200	1200	1200	1200	1200
Nominal Input Current (A rms)	9.7	9.0	7.0	6.8	6.4	6.1	5.9
Maximum Rated Input Wattage Rating (Watts)	930	1034	1348	1348	1348	1348	1348
Maximum Rated VA (Volt-Amp)	970	1079	1406	1406	1406	1406	1406
Efficiency (%)	86	87	89	89	89	89	89

Power Specifications

Power Factor	0.97						
Leakage Current (mA)	0.42	0.50	0.83	0.87	0.92	0.96	1.00
Maximum Inrush Current (A peak)	30						
Maximum Inrush Current duration (mS)	20						
Maximum British Thermal Unit Rating (BTU-Hr)	3174	3530	4600	4600	4600	4600	4600

HP 1200W Common Slot Platinum Hot Plug Power Supply Kit							
Part Number	578322-B21						
Input Voltage Range (V rms)	100 to 240						
Frequency Range (Nominal) (Hz)	50/60						
Nominal Input Voltage (Vrms)	**100**	**120**	**200**	**208**	**220**	**230**	**240**
Maximum Rated Output Wattage Rating	800	900	1200	1200	1200	1200	1200
Nominal Input Current (A rms)	9.3	8.6	6.7	6.5	6.1	5.8	5.6
Maximum Rated Input Wattage Rating (Watts)	889	989	1290	1290	1290	1290	1290
Maximum Rated VA (Volt-Amp)	927	1031	1345	1345	1345	1345	1345
Efficiency (%)	90	91	93	93	93	93	93
Power Factor	0.97						
Leakage Current (mA)	0.42	0.50	0.83	0.87	0.92	0.96	1.00
Maximum Inrush Current (A peak)	30						
Maximum Inrush Current duration (mS)	10						
Maximum British Thermal Unit Rating (BTU-Hr)	3033	3375	4403	4403	4403	4403	4403

To review typical system power ratings use the Active Answers HP Power Advisor which is available via the online tool located at URL: www.hp.com/go/proliant-energy-efficient or www.hp.com/go/hppoweradvisor

Technical Specifications

System Unit	**Chassis Dimensions** (H x W x D) Add fan extension kit (with bezel)	6.96 x 17.638 x 35.236in (17.68 x 44.8 x 89.55cm)	
	Weight (approximate)	Maximum (all hard drives, power supplies, and processors installed)	220lb (99.8kg)
	Input Requirements (per power supply)	Rated Line Voltage	90 to 140 VAC 180 to 264 VAC
		Rated Input Current	7.31A at 115VAC 3.6A at 230VAC
		Rated Input Frequency	47 to 63 Hz
		Rated Input Power	855W (at 100 VAC), 840.72W (at 200 VAC)
	Power Specifications	To review typical system power ratings use the HP Power Advisor which is available via the online tool located at URL: www.hp.com/go/proliant-energy-efficient	
	Power Supply Output (per power supply)	Rated Steady-State Power	653.10W (at 100 VAC), 653.08W (at 200 VAC)
	System Inlet Temperature	Operating	50° to 95° F (10° to 35° C) at sea level with an altitude derating of 1.8°F per every 1000 ft (1.0°C per every 305 m) above sea level to a maximum of 10,000 ft (3050 m), no direct sustained sunlight. Maximum rate of change is 18°F/hr (10°C/hr). The upper limit may be limited by the type and number of options installed. System performance may be reduced if operating with a fan fault or above 86°F (30°C).
		Non-operating	-22° to 140° F (-30° to 60° C) Maximum rate of change is 36°F/hr (20°C/hr).
	Relative Humidity (non-condensing)	Operating	10% to 90% relative humidity (Rh), 82.4°F (28°C) maximum wet bulb temperature, non-condensing.
		Non-operating	5% to 95% relative humidity (Rh), 101.7°F (38.7°C) maximum wet bulb temperature, non-condensing.
	Altitude	Operating	10,000 ft (3050 m). This value may be limited by the type and number of options installed. Maximum allowable altitude change rate is 1500 ft/min (457 m/min).
		Non-operating	30,000 ft (9144 m). Maximum allowable altitude change rate is 1500 ft/min (457 m/min).
	Acoustic Noise	Listed are the declared A-Weighted sound power levels (LWAd) and declared average bystander position A-Weighted sound pressure levels (LpAm) when the product is operating in a 23°C ambient environment. Noise emissions were measured in accordance with ISO 7779 (ECMA 74) and declared in accordance with ISO 9296 (ECMA 109). **Idle**	

		LWAd	6.4
		LpAm	45dBA
		Operating	
		LWAd	6.7
		LpAm	51dBA
	Emissions Classification (EMC)	FCC Rating	Class A
		Normative Standards	CISPR 22; EN55022; EN55024; FCC CFR 47, Pt 15; ICES-003; CNS13438; GB9254; K22;K24; EN 61000-3-2; EN 61000-3-3; EN 60950-1; IEC 60950-1
		NOTE: Product conformance to cited product specifications is based on sample (type) testing, evaluation, or assessment. This product or family of products is eligible to bear the appropriate compliance logos and statements.	
Embedded NC362i PCIe Gigabit Server Adapter	**Network Interface**	Integrated 10/100/1000BASE-T Transceiver Combines a triple-speed IEEE 802.3TM - Compliant Media Access Controller (MAC) with a triple-speed Ethernet transceiver.	
	Data Transfer Method	Compliant to x4 PCIe Specification	
	Controller	Intel® 82576	
	Network Transfer Rate	10Base-T (Half-Duplex)	10 Mb/s
		10Base-T (Full-Duplex)	20 Mb/s
		100Base-TX (Half-Duplex)	100 Mb/s
		100Base-TX (Full-Duplex)	200 Mb/s
		1000Base-TX (Half and Full-Duplex)	2000Mb/s
	Connector	RJ-45 connector	
	Cable Support	Performs all the physical layer functions for 10BASE-T, 100BASE-T, and 1000BASE-T Ethemet on standard Category 5 UTP	
HP NC543i 2-port 4x QDR InfiniBand /10 GB Adapter	**Data Transfer Method**	Compliant to x8 PCIe Gen2 Specification.	
	Network Transfer Rate	X4 IB: 10 Gb/s (SDR), 20 Gb/s (DDR), 40Gb/s (QDR) 10Gb/s Ethernet: Full-duplex single lane XFI	
	Connector	QSFP - IB SFP+ - 10Gb/s Ethernet.	
	Cable Support	IB: HP copper and optical IB cables. 10Gb/s: HP copper and optical SFP+ cables.	
Environment-friendly Products and Approach	**End-of-life Management and Recycling**	Hewlett-Packard offers end-of-life HP product return, trade-in, and recycling programs in many geographic areas. For trade-in information, please go to: http://www.hp.com/go/green. To recycle your product, please go to: http://www.hp.com/go/green or contact your nearest HP sales office. Products returned to HP will be recycled, recovered or disposed of in a responsible manner. The EU WEEE directive (2002/95/EC) requires manufacturers to provide treatment information for each product type for use by treatment facilities. This information (product disassembly instructions) is posted on the Hewlett Packard web site at: http://www.hp.com/go/green. These instructions may be used by recyclers and other WEEE treatment facilities	

as well as HP OEM customers who integrate and re-sell HP equipment.

Summary of Changes

Date	Version History	Action	Description of Change:
01-Nov-2014	From version 28 to 29	Changed	Service and support sections updated.
18-Apr-2014	From Version 27 to 28	Changed	Optimized, Standard, and Basic Care were revised in Service and Support.
01-Mar-2013	From Version 26 to 27	Removed	Additional Options: Removed 452148-B22 from HP Insight Software section.
07-Dec-2012	From Version 25 to 26	Added	HP I/O Expansion Options HP R5KVA and R7KVA 3U Extended Runtime Module was added to HP UPS HP Insight Software, HP Tape Backup, HP Uninterruptible Power Systems, HP Power Distribution Units and HP Intelligent Power Distribution Units (iPDU) sections Added several new Storage Options Added three new Storage Controllers
		Changed	Completely revised Standard Features/Processors Updated Standard Features/Cache Memory Updated HP Insight Control Updated the model names in the s6500 chassis models section. Updated processors in Configuration Information/Step 2 Completely revised HP Unique Options, HP Processors, Hard Drives, and HP Infiniband in Core Options Revised GPU Computing Modules models in Additional Options Revised HP Rack Options
		Removed	Removed the first half of Configuration Information/Step 1 Removed "Performance Models" from HP ProLiant SL390s G7 1U Server and HP ProLiant SL390s G7 2U Server Removed Cable Kits from Configuration Information/Step 3 Removed HP Power Supplies from Core Options Removed SL Advanced Power Manager

Summary of Changes

			Removed HP iLO Advanced License Removed HP Rail Options Removed HP Backup & Recovery Software Removed HP Power Cords
19-Oct-2012	From Version 24 to 25	Removed	Removed a part number from the Options section.
24-Sep-2012	From Version 23 to 24	Changed	Changes were made in the Optional Features section.
17-May-2012	From Version 22 to 23	Changed	Changes were made in the Standard Features, Configuration Information and Options sections.
26-Mar-2012	From Version 21 to 22	Changed	Changes made in the Options section.
06-Mar-2012	From Version 20 to 21	Changed	Changed a link in the Hard Drives section of Core Options.
13-Feb-2012	From Version 19 to 20	Changed	Changes made in the Standard Features, Configuration Information, Options and Storage sections.
26-Sep-2011	From Version 18 to 19	Changed	Processors and Hard Drives were updated GPU Computing Modules and Storage Options product descriptions were revised Hot Plug SATA SSD 2.5" maximum internal storage was added
15-Sep-2011	From Version 17 to 18	Changed	Part number change was made in Step 1 of Configuration Information.
31-Aug-2011	From Version 15 to 17	Removed	Removed SATA Hot Plug SFF (2.5-inch) Entry (ETY) Drives from the Hard Drives and Storage sections.
02-Aug-2011	From Version 14 to 15	Changed	Description change made in the Hard Drives section.
24-Jun-2011	From Version 13 to 14	Changed	HP 1TB 6G SAS 7.2K rpm SFF Hot Plug Midline Drive, HP 3TB 3G SATA 7.2K rpm LFF Quick Release Midline Drive and 6G SAS Hot Plug Enterprise Performance and Mainstream Solid State Drives were added and HP 160GB 3G SATA 7.2K rpm SFF Midline Drive and HP 160GB 3G SATA 7.2K rpm SFF Quick-release Midline Drive were removed from Hard Drives HP NC552SFP 10Gb 2-port Ethernet Server Adapter was added to HP Networking
15-Jun-2011	From Version 12 to 13	Removed	Removed part number 627632-B21 from the Core Options / HP Hard Drives section.
01-Jun-2011	From Version 11 to 12	Changed	Note changes made to the Models and Options sections.
24-May-2011	From Version 10 to 11	Changed	Hot Plug SAS 2.5" maximum internal storage was increased to 3.6TB HP 900GB 6G SAS 10K rpm SFF Enterprise Drive was added to Hard Drives NVIDIA Tesla M2090 6GB Module was added to GPU Computing Modules

Summary of Changes

05-Apr-2011	From Version 9 to 10	Changed	GPU Computing Modules and Service and Support were completely revised Models and Power Supplies descriptions were revised Part numbers were changed for HP Cluster Management Utility Compute Node Flexible License and HP High Performance Computing Linux Value Pack 1 Processor Flexible License in High Performance Clusters GPUs are not supported with configurations consisting of a single CPU note was added to Processors Non-hot Plug SAS and SSD 2.5" Maximum Internal Storage were added The Chassis dimensions are 6.96 x 17.638 x 35.236 in (17.68 x 44.8 x 89.55 cm) (H x W x D) and requires a 1200mm deep server rack and The Redundant Fan Kit also extends the depth of the SL Chassis to 38.15 in or 96.90 cm notes were added to Step 1 HP 600GB 6G SAS 10K rpm SFF Dual Port Enterprise, HP 160GB 3G SATA 7.2K rpm LFF Quick-release Entry and HP 1TB 3G SATA 7.2K rpm SFF Quick-release Midline Drives were added to Hard Drives HP 4GB Micro SDHC Flash Media Kit was added to HP USB and SD Options Oracle Solaris and Citrix Essentials for XenServer were removed from Operating Systems and Virtualization Software Support for ProLiant Servers
16-Mar-2011	From Version 8 to 9	Changed	Processor descriptions were revised in Step 2 of the Configuration Information section.
14-Feb-2011	From Version 7 to 8	Changed	Models and HP StorageWorks Options product descriptions were revised Power Supplies was completely revised Intel Xeon Processor X5690, X5675, E5649, E5645, X5687, X5672, E5606 and E5603 were added to Processors SL390s 4U half width server was added throughout HP ProLiant SL390s G7 4U Right and Left Half Tray Node Servers were added to HP Server Nodes HP 16GB Dual Rank x4 PC3L-10600 Registered CAS-9 LP Memory Kit and HP 32GB Quad Rank x4 PC3L-8500 Registered CAS-9 LP Memory Kit were added to Memory

Summary of Changes

			HP SL390s 4U SAS Enablement Kit was added to HP Unique Options HP 120GB 1.5G SATA 5.4K rpm SFF Entry Hard Drive and HP 2TB 6G SAS 7.2K rpm LFF Quick-release Dual Port Midline Hard Drive was added to Hard Drives HP SL Advanced Power Mrg Dist Module Kit was added to HP SL Advanced Power Manager Online Spare module (available with Intel Xeon 5600 series processors) was removed from Memory Protection
26-Jan-2011	From Version 6 to 7	Changed	NVIDIA Tesla M2050 3GB Module and NVIDIA Tesla M2070 6GB Module product descriptions were revised in GPU Computing Modules.
10-Jan-2011	From Version 5 to 6	Changed	HP Chassis and HP Server Mode product descriptions were revised, This kit includes only 1 fan note was added to HP Chassis Fan and Only needed with 2U when configured with no GPUs or 1 GPU note was added to Cable Kits in Configuration Information Node blank is needed when removing 1/2 width tray for service note was added to HP S6500 node blank kit and HP s6500 Half Width Service Tray Kit and HP s6500 POD RAIL KIT were removed from HP Unique Options Power Supplies note was modified HP Insight Software product description was revised One optional IB (QSFP) was added to Network RJ-45 and Micro SD was added in Interfaces Notes were added to System Fans HP Management DVD and HP ProLiant Smart Update Firmware DVD were added to HP Insight management software HP z6000 BBWC HDWR KIT (582653-B21) is required when adding BBWC note was added to HP 650 mAh P-Series Battery in Storage Controllers Mirroring Mode was removed from Memory Protection UPS and PDU Power Cord Matrix was removed from Standard Features HP NC364T PCI Express Quad Port Gigabit Server Adapter was removed from HP Networking HP SL APM Cable Kit (1 per SL APM Distribution module) was removed from HP SL Advanced Power Manager

Summary of Changes

03-Dec-2010	From Version 4 to 5	Changed	Activated a link in the High Performance Clusters section.
29-Oct-2010	From Version 3 to 4	Changed	Corrected a part number in the GPU Computing Modules section.
25-Oct-2010	From Version 2 to 3	Changed	Changes made in the Standard Features, Models, Core and Additional Options and Storage sections.
05-Oct-2010	From Version 1 to 2	Changed	Changes made in the Standard Features and Core Options sections.

© Copyright 2014 Hewlett-Packard Development Company, L.P.

The information contained herein is subject to change without notice.

Microsoft and Windows NT are US registered trademarks of Microsoft Corporation. Intel, the Intel logo, Xeon and Xeon Inside are trademarks of Intel Corporation in the U.S. and other countries.

The only warranties for HP products and services are set forth in the express warranty statements accompanying such products and services. Nothing herein should be construed as constituting an additional warranty. HP shall not be liable for technical or editorial errors or omissions contained herein.

For hard drives, 1GB = 1 billion bytes. Actual formatted capacity is less.