HPE ProLiant SL390s G7 Server - Parts Support Guide

Part Number: External
Published: 2020
Edition: 1

HPE ProLiant SL390s G7 Server - Parts Support Guide

Abstract
This document gives a step-by-step instruction on how to remove and replace the components of the product.

Part Number: External
Published: 2020
Edition: 1

© Copyright 2020 Hewlett Packard Enterprise Development LP

Notices

The information contained herein is subject to change without notice. The only warranties for Hewlett Packard Enterprise products and services are set forth in the express warranty statements accompanying such products and services. Nothing herein should be construed as constituting an additional warranty. Hewlett Packard Enterprise shall not be liable for technical or editorial errors or omissions contained herein.

Confidential computer software. Valid license from Hewlett Packard Enterprise required for possession, use, or copying. Consistent with FAR 12.211 and 12.212, Commercial Computer Software, Computer Software Documentation, and Technical Data for Commercial Items are licensed to the U.S. Government under vendor's standard commercial license.

Links to third-party websites take you outside the Hewlett Packard Enterprise website. Hewlett Packard Enterprise has no control over and is not responsible for information outside the Hewlett Packard Enterprise website.

Acknowledgments

Intel®, Itanium®, Optane™, Pentium®, Xeon®, Intel Inside®, and the Intel Inside logo are trademarks of Intel Corporation in the U.S. and other countries.
Microsoft® and Windows® are either registered trademarks or trademarks of Microsoft Corporation in the United States and/or other countries.
Adobe® and Acrobat® are trademarks of Adobe Systems Incorporated.
Java® and Oracle® are registered trademarks of Oracle and/or its affiliates.
UNIX® is a registered trademark of The Open Group.
All third-party marks are property of their respective owners.

Table of contents

Remove/Replace
References
Precautions 6
Tools And Materials 10
Power Down Procedures 10
Systembattery Considerations 11
1U/2U Memory Considerations 11
4U Memory Considerations 12
Cable Management 13
s6500 chassis
System Fan 14
Power Supply 14
PSU Backplane 15
SLAPM Interface Module 16
SL390s 1U half-width server
1U System Tray 16
Hard Disk Drive 17
Memory DIMM 19
Heat Sink And Processor 20
IOH Loopback Board 22
PCIe Expansion Card 22
BBW Cache Module And Battery Pack 23
PCI Riser Card 24
MLB Power Cable 24
IB Enablement Board 25
System Battery 25
Personality Board 26
System Board 27
SL390s 2U half-width server
Hot-Plug Hard Disk Drive 28
2U System Tray 28
Non Hot-Plug Hard Disk Drive 29
Upper GPU Module 30
GPU Power Board 30

Hard Disk Drive Cage And Backplane....31
GPU Shelf....32
IOH Mezzanine Card....33
2U Front Riser Board....33
Mini-SAS To SATA Cable....34
Lower GPU Module....35
GPU Riser Rear Board....36
X24 Riser Assembly....36
2U PCIe Expansion Card....37
2U BBW Cache Module And Battery Pack....38
X24 Riser Card....39
2U MLB Power Cable....39
2U IB Enablement Board....40
2U Memory DIMM....40
2U Heat Sink And Processor....41
2U System Battery....43
2U Personality Board....44
2U System Board....45
SL390s 4U half-width server....
4U Hard Disk Drives....45
4U System Tray....46
4U Hard Disk Drive Cage And Backplane....47
4U GPU Module....48
8 GPU Shelf....49
4U Front Panel....51
4U Interposer Module With QPI Mezzanine Card....51
4U Mini-SAS To SATA Cable....52
4U X24 Riser Assembly....52
4U PCIe Expansion Card....53
4U BBW Cache Module And Battery Pack....54
4U X24 Riser Card....54
4U MLB Power Cable....55
4U IB Enablement Board....56
4U Memory DIMM....56
4U Heat Sink And Processor....57
4U System Battery....59
4U System Board....59
4U Personality Board....60

4U Power BP Module.....61
4U Power Module.....62

Precautions

To prevent damage to the unit, protect data, and avoid personal injury, review and follow these precautions.

Before you begin

1. If the unit contains heated components, wait until the components have cooled off before proceeding. Refer to the service manual for details on how long each component requires to adequately cool off.
2. Put on your electrostatic discharge (ESD) wrist or shoe strap to avoid damaging any circuitry.
3. Place an ESD mat on a suitably grounded surface, and then place the unit on the mat.
4. Remove any devices from the unit being serviced, such as diskettes, tape cartridges, or CD-ROMs.
5. Power off the unit and any peripheral devices that are connected to it.**Note: Replacing a hot-plug device does not require powering down the unit.**
6. Disconnect the power cord from the electrical outlet and then from the unit. When a unit is plugged into an AC power source, voltage is always applied to the unit. You must therefore disconnect the power cord from the power source before opening the unit.
7. Disconnect all peripheral device cables from the unit.

Static electricity

An electrostatic discharge (ESD) can damage static-sensitive devices or microcircuit. Proper packaging and grounding techniques are necessary precautions to prevent damage. To prevent electrostatic damage, observe the following precautions:

- Transport products in static-safe containers such as conductive tubes, bags, or boxes.
- Keep electrostatic-sensitive parts in their containers until they arrive at static-free stations.
- Cover workstations with approved static-dissipating material. Use a wrist strap connected to the work surface, and properly grounded (earthed) tools and equipment.
- Keep work area free of nonconductive materials, such as ordinary plastic assembly aids and foam packing.
- Make sure that you are always properly grounded (earthed) when touching a static-sensitive component or assembly.
- Avoid touching pins, leads, or circuitry.

- Always place drives with the Printed Circuit Board (PCB) assembly-side down.
- Use conductive field service tools.

Pre-servicing procedure

Perform the steps below before you open the server or before you remove or replace any component.**WARNING: Failure to properly turn off the server before you open the server or before your start removing/replacing components may cause serious damage as well as bodily harm.**

1. Turn off the server and all the peripherals connected to it.
2. Unplug all cables from the power outlets to avoid exposure to high energy levels that may cause burns when parts are short-circuited by metal objects such as tools or jewelry.
3. During disassembly, label each cable as you remove it, noting its position and routing. This will make the replacement of the cables much easier, and will ensure that the cables are rerouted properly to protect the cables.
4. Keep all screws with the units removed. The screws used in the server may be of different thread sizes and lengths; using the wrong screw in a component could damage the unit.
5. If server is installed in a rack, remove server and place it on a flat surface.
6. Disconnect telecommunication cables to avoid exposure to shock hazard from ringing voltages.
7. Follow the ESD precautions when handling a server component.

IMPORTANT: To streamline the configuration process, watch and read through the entire removal/replacement procedure first and make sure you understand them before you begin.

Post-installation instructions

Observe the following items after removing/replacing a server component:

1. Be sure all components are installed according to the described step-by-step instructions.
2. Check to make sure you have not left loose tools or parts inside the server.
3. Reinstall the PCI riser, peripherals, and system cables that you have removed.
4. Reinstall the server into the chassis.
5. Connect all external cables to the system.
6. Press the power button on the front panel to turn on the server.

NOTE: The HP ProLiant SL390s server supports up to 4 750-W or 1200-W power supply units.

Server blade warnings and cautions

Before installing a server, be sure that you understand the following warnings and cautions.

WARNING: To reduce the risk of electric shock or damage to the equipment:

- Do not disable the power cord grounding plug. The grounding plug is an important safety feature.
- Plug the power cord into a grounded (earthed) electrical outlet that is easily accessible at all times.
- Unplug the power cord from the power supply to disconnect power to the equipment.
- Do not route the power cord where it can be walked on or pinched by items placed against it. Pay particular attention to the plug, electrical outlet, and the point where the cord extends from the server.

WARNING: To reduce the risk of personal injury from hot surfaces, allow the drives and the internal system components to cool before touching them.

CAUTION: Do not operate the server for long periods with the access panel open or removed. Operating the server in this manner results in improper airflow and improper cooling that can lead to thermal damage.

CAUTION: The following rack-mount instructions shall be paid attention to.

- Elevated Operating Ambient - If installed in a closed or multi-unit rack assembly, the operating ambient temperature of the rack environment may be greater than room ambient. Therefore, consideration should be given to installing the equipment in an environment compatible with the maximum ambient temperature (Tma) specified by the manufacturer.
- Reduced Air Flow - Installation of the equipment in a rack should be such that the amount of air flow required for safe operation of the equipment is not compromised.
- Mechanical Loading - Mounting of the equipment in the rack should be such that a hazardous condition is not achieved due to uneven mechanical loading.
- Circuit Overloading - Consideration should be given to the connection of the equipment to the supply circuit and the effect that overloading of the circuits might have on overcurrent protection and supply wiring. Appropriate consideration of equipment nameplate ratings should be used when addressing this concern.
- Reliable Earthing - Reliable earthing of rack-mounted equipment should be maintained. Particular attention should be given to supply connections other than direct connections to the branch circuit (e.g. use of power strips)."

Symbols on equipment

The following symbols may be placed on equipment to indicate the presence of potentially hazardous conditions:

 	This symbol indicates the presence of hazardous energy circuits or electric sh ock hazards. Refer all servicing to qualified personnel.**WARNING: To reduce th e risk of injury from electric shock hazards, do not open this enclosure. Re fer all maintenance, upgrades, and servicing to qualified personnel.**
 	This symbol indicates the presence of electric shock hazards. The area contain s no user or field serviceable parts. Do not open for any reason.**WARNING: To reduce the risk of injury from electric shock hazards, do not open this encl osure.**
 	This symbol on an RJ-45 receptacle indicates a network interface connection. **WARNING: To reduce the risk of electric shock, fire, or damage to the equ ipment, do not plug telephone or telecommunications connectors into this receptacle.**
	This symbol indicates the presence of a hot surface or a hot component. If this surface is touched, the potential for injury exists.**WARNING: To reduce the ris k of injury from a hot component, allow the surface to cool before touching .**



  weight1_kgweight1_lb	This symbol indicates that the component exceeds the recommended weight for one individual to handle safely.**WARNING : To reduce the risk of personal injury or damage to the equipment, observe local occupational health and safety requirements and guidelines for manual material handling.**
	These symbols, on power supplies or systems, indicate that the equipment is s upplied by multiple sources of power.**WARNING: To reduce the risk of injury f rom electric shock, remove all power cords to completely disconnect power from the system.**

Tools And Materials

- T-10 and T-15 Torx screwdrivers
- P-1 Philips-head screwdriver
- Flat-blade screwdriver

Power Down Procedures

Power down procedures

The server does not completely power down when the power button on the front panel is pressed. The button toggles between On and Standby. The standby position removes power from most electronics and the drives, but some internal circuitry remains active. To completely remove all power from the system, disconnect all power cords from the server.To power down the server:

1. Shut down server as directed by the operating system documentation.
2. Press the power button to toggle to Standby.
3. This places the server in standby mode changing the power LED indicator to amber. In this mode, the main power supply output is disabled. Standby does not completely disable or remove power from the system.
4. Be sure that the power LED indicator is turned off and that the fan noise has stopped.
5. Disconnect all power cords from the server.

Systembattery Considerations

System battery considerations

WARNING: Note the following reminders when replacing the system battery:

- Replace the battery with the same type as the battery recommended by HP. Use of another battery may present a risk of fire or explosion.
- A risk of fire and chemical burn exists if the battery is not handled properly. Do not disassemble, crush, puncture, or short external contacts, or expose the battery to temperatures higher than 60°C (140°F).
- Do not dispose of used battery in water or fire. Dispose of used batteries according to manufacturer's instructions.

CAUTION: Loss of BIOS settings occurs when the battery is removed. You must reconfigure BIOS settings whenever you replace the battery. NOTE: If the server no longer automatically displays the correct date and time, you may need to replace the system battery. Under normal usage, battery life is five to ten years.

1U/2U Memory Considerations

1U/2U Memory considerations

HP ProLiant SL390s servers have 12 DIMM slots that support up to 96 GB maximum system memory.

- You must adhere to the following guidelines when adding or replacing memory modules:
- Support 12 DDR3 240-pin RDIMM (SR, DR, QR) or UDIMM (SR, DR) slots (6 DIMMs per CPU).
- Channel 0 is located furthest to processor, followed by channel 1 then channel 2.
- DIMM 0 is the furthest from the processor of the two DIMMs in a given channel.
- DIMM Capacity up to 16G.
- Speed is 800 MHz, 1067 MHz, 1333 MHz depending on DIMM population.
- Supported DIMM: 1 GB, 2 GB, 4GB and 8GB DDR3.
- DIMM Voltage is 1.5V and LV 1.35V.
- For 2P system, both physical processors in each Node must be of the same type and speed.

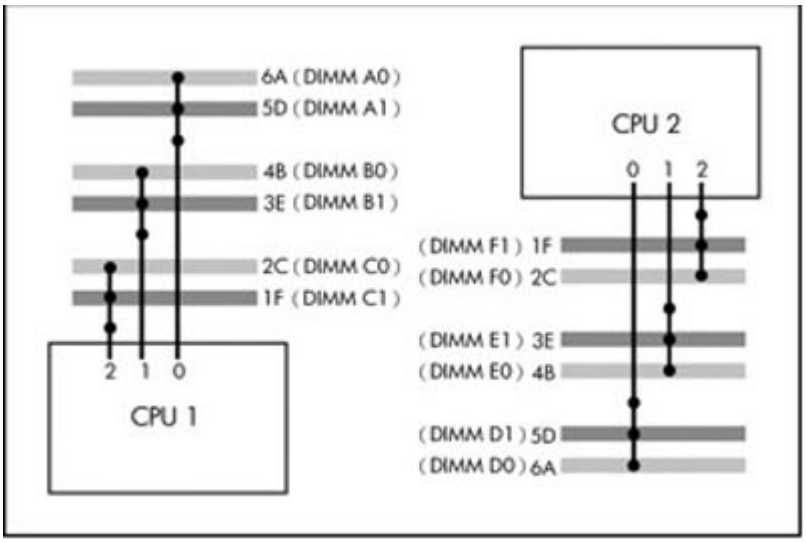

4U Memory Considerations

HP ProLiant SL390s servers have 12 DIMM slots that support up to 96 GB maximum system memory.

- You must adhere to the following guidelines when adding or replacing memory modules:
- Support 12 DDR3 240-pin RDIMM (SR, DR, QR) or UDIMM (SR, DR) slots (6 DIMMs per CPU)
- RDIMM = Registered DIMM; UDIMM = Unbuffered DIMM

- Channel 0 is located furthest to processor, followed by channel 1 then channel 2
- DIMM 0 is the furthest from the processor of the two DIMMs in a given channel
- Single RDIMM Capacity up to 16GB; Single UDIMM Capacity up to 2GB
- Speed is 800 MHz, 1067 MHz and 1333 MHz depending on DIMM population
- Supported DIMM: 1GB, 2GB, 4GB, 8GB and 16GB (192GB maximum capacity) DDR3
- DIMM Voltage is 1.5V or LV 1.35V
- For 2P system, both physical processors in each socket must be of the same type and speed

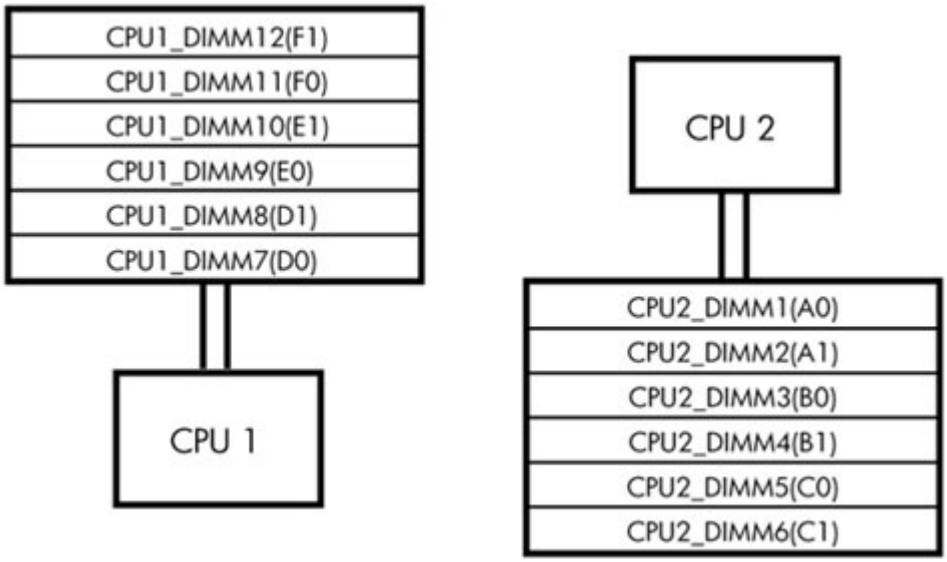

Cable Management

Always follow good cable management practices when working inside the computer.

- Keep cables away from major heat sources like the heat sink.
- Do not jam cables on top of expansion cards or memory modules. Printed circuit cards are not designed to withstand excessive pressure.
- Keep cables clear of sliding or moveable parts to prevent cutting or crimping.
- When folding a flat ribbon cable, never fold to a sharp crease. Sharp creases may damage the wires.
- Some flat ribbon cables come pre-folded. Never change the folds on these cables.
- Do not sharply bend any cable. A sharp bend can break the internal wires.

- Never bend a SATA data cable tighter than a 30 mm (1.18 in) radius.
- Never crease a SATA data cable.
- Do not rely on components like the drive cage, power supply, or system cover to push cables down into the chassis.

Removing power supply cables from the system board connectors (J36) follow below steps:

1. Squeeze on the top of the retaining latch attached to the cable end of the connector.
2. Grasp the cable end of the connector and pull it straight up.**CAUTION: Always pull the connector - NEVER pull on the cable. Pulling on the cable could damage the cable and result in a failed power supply.**

System Fan

https://support.hpe.com/hpesc/public/videoDisplay?videoId=vpsg00003185en_us&noframe

System Fan removal

Before you begin: Review and follow Precautions .**NOTE: There are two sizes of fans supported. Removal/Replacement procedures are the same for both.**

1. Squeeze the two release tabs on the system fan together to release it from the system fan bay at the rear of the chassis.
2. Slide the system fan out of the system fan bay.

System Fan replacement

1. Align the connector on the system fan with the connector inside the system fan bay.
2. Slide the system fan into the system fan bay until it clicks into place, indicating that it is fully seated.

Power Supply

https://support.hpe.com/hpesc/public/videoDisplay?videoId=vpsg00003186en_us&noframe

Power Supply removal

Before you begin: Review and follow Precautions .**WARNING: Take note of the following reminders to reduce the risk of personal injury from electric shock hazards and/or damage to the equipment.CAUTION: To prevent improper cooling and thermal damage, do not attempt to remove and replace a power supply as a hot-plug procedure unless all bays are populated with power supplies. If a power supply fails, leave it in place in the enclosure until a new power supply is available to install.CAUTION: DO NOT open the power supply unit. There are no serviceable parts inside it.**

1. Remove the power cord from the power supply.
2. Grasp the power supply by the handle and release tab.
3. Squeeze the release tab and slide the power supply out of the power supply bay at the rear of the chassis.**CAUTION: Be sure to support the power supply from underneath.**

Power Supply replacement

1. While supporting the power supply from underneath, align the power supply edge card with the connector inside the power supply bay.
2. Slide the power supply into the chassis until it clicks into place, indicating that it is fully seated.

PSU Backplane

https://support.hpe.com/hpesc/public/videoDisplay?videoId=vpsg00003187en_us&noframe

PSU Backplane removal

Before you begin: Review and follow Precautions . Review and follow Power down procedures for all servers in the s6500 chassis. Remove all power supplies.

1. Pull all servers forward a couple inches to disengage them from the backplane.
2. Remove the T-15 Torx screw that secures the top cover to the power supply cage.
3. Slide the top cover back and carefully lift it up enough to disconnect the cable from the top cover to the PSU backplane.
4. Disconnect all of the cables to the PSU Backplane, noting their location for later reconnection.
5. Lift the PSU backplane up and out of the chassis.

PSU Backplane replacement

1. Align the PSU backplane guide pins with the guide slots in the chassis.
2. Lower the PSU backplane completely into chassis.
3. Reconnect all of the cables to the PSU backplane.
4. Reconnect the top cover cable to the PSU backplane.
5. Turn the top cover over and align the guide pins in the chassis with the guide slots in the top cover.
6. Press down gently and slide the top cover back into position.
7. Replace the T-15 Torx screw to secure the top cover to the power supply cage.
8. Reseat all servers.

SLAPM Interface Module

https://support.hpe.com/hpesc/public/videoDisplay?videoId=vpsg00003188en_us&noframe

SLAPM Interface Module removal

Before you begin: Review and follow Precautions . Review and follow Power down procedures for all servers in the s6500 chassis.

1. Remove the T-15 Torx screw that secures the top cover to the power supply cage.
2. Slide the top cover back and carefully lift it up, careful not to disconnect the cable to the PSU backplane, and rest it temporarily on top of the chassis.
3. Remove the two T-10 Torx screws that secure the SLAPM interface module to the power supply cage.
4. Slide the SLAPM interface module out of the top power supply bay.

SLAPM Interface Module replacement

1. To replace the SLAPM interface module, reverse the removal procedures.

1U System Tray

https://support.hpe.com/hpesc/public/videoDisplay?videoId=vpsg00003189en_us&noframe

1U System Tray removal

Before you begin: Review and follow Precautions . Review and follow Power down procedures for the 1U half-width server to be serviced.**NOTE: The 1U half-width server trays fit into the left side only or the right side only of the S6500 chassis. The removal and replacement procedure is the same for both, with the exception of the location of the release latch. The release latch is always located on the outer end of the system tray.**

1. Pull the release latch down and slide the 1U system tray out of the S6500 chassis until it stops.
2. Press in on the release button located on the outside edge of the 1U system tray and slide the server completely out of the chassis.**CAUTION: Be sure to support the 1U system tray from underneath.**
3. Place the 1U system tray on a flat anti-static surface.
4. Slide a 1U half-wide node blank into the empty 1U server bay.**NOTE: The same 1U half-wide node blank can be turned over to fit in either the left or right side of the S6500 chassis.**

1U System Tray replacement

1. If necessary, remove the 1U half-node blank from the appropriate server bay.
2. While supporting the 1U system tray from underneath, align and slide the 1U system tray all the way into the S6500 chassis until it clicks into position, indicating that it is fully seated.

Hard Disk Drive

https://support.hpe.com/hpesc/public/videoDisplay?videoId=vpsg00003190en_us&noframe

Hard Disk Drive removal

Before you begin: Review and follow Precautions . Review and follow Power down procedures for the 1U server and remove the 1U system tray.**NOTE: 1U SL390s servers support either 3.5 LFF drives or 2.5 SFF drives, but not both within a single system tray.**

1. For LFF drives:
   a. Slide the HDD carrier latches to unlock the HDD handle.
   b. Raise the HDD handle.

c. Lift the HDD assembly partially out of the 1U system tray.

d. Disconnect the SATA data and power cable from the hard disk drive.

e. If necessary remove the four T-10 Torx screws that secure the hard disk drive to the HDD carrier.

2. For SFF drives:

a. Disconnect the SATA data and power cable from the hard disk drive.

b. For the upper drive in the SFF drive cage, slide the HDD carrier latches to unlock the HDD handle.

c. For the lower drive in the SFF drive cage, press in on the release latch of the SFF drive cage and rotate the top bay up to gain access to the hard disk drive below.

d. Slide the HDD carrier latches to unlock the HDD handle.

e. Raise the HDD handle.

f. Lift the HDD assembly out of the SFF drive cage.

g. If necessary remove the four P-1 Phillips-head screws that secure the hard disk drive to the HDD carrier.

3. For the SFF drive cage:

a. Use a flat bladed tool to disengage the release tab in the SFF drive cage.

b. Slide the SFF drive cage forward and lift the SFF drive cage out of the system tray.

Hard Disk Drive replacement

1. For the LFF drives:

a. If necessary, insert the LFF hard disk drive into the HDD carrier and insert the four T-10 Torx screws to secure the hard disk drive to the HDD carrier.

b. If not already open, slide the HDD carrier latches to unlock the HDD handle.

c. Raise the HDD handle.

d. Connect the SATA data and power cable to the hard disk drive.

e. Align and lower the HDD assembly over the five guide pins in the system tray.

f. Rotate the HDD carrier handle down.

g. Lock the HDD carrier latches.

2. For the SFF drives:

a. If necessary, insert the SFF hard disk drive into the HDD carrier and replace the four P-1 Phillips-head screws to secure the hard disk drive to the HDD carrier.

b. If not already open, slide the HDD carrier latches to unlock the HDD handle.

c. Raise the HDD handle.

d. Align and lower the HDD assembly over the four guide pins in the SFF drive cage.

e. Rotate the HDD carrier handle down.

f. Lock the HDD carrier latches.

g. Connect the SATA data and power cable to the hard disk drive.

h. For access to the lower bay in the SFF drive cage, press in on the release latch of the SFF drive cage and rotate the top bay up.

3. For the SFF drive cage:

   a. Align and lower the SFF drive cage over the five guide pins in the system tray.

   b. Slide the SFF drive cage back until it locks into place in the system tray.

Memory DIMM

https://support.hpe.com/hpesc/public/videoDisplay?videoId=vpsg00003191en_us&noframe

Memory DIMM removal

Before you begin: Review and follow Precautions . Review and follow Memory considerations . Review and follow Power down procedures for the 1U server and remove the 1U system tray.

1. Open the DIMM slot latches.
2. Lift the DIMM up and out of the DIMM slot
3. Place the DIMM in a static-dissipative bag.

Memory DIMM replacement

1. Ensure that the DIMM slot latches are open.
2. Remove the DIMM from its static-dissipative bag.

3. Locate the alignment notch on the DIMM and align it with the key in the DIMM slot.
4. Push the DIMM down firmly into the slot until the DIMM slot latches snap into place.
5. Ensure that the DIMM is fully inserted and properly seated in the slot.**CAUTION: The memory slots are structured to ensure proper installation. If you insert a memory module but it does not fit easily into the slot, you may have inserted it incorrectly. Double-check the orientation of the module and reinsert. If the holding clips do not close, the module is not inserted correctly.**

Heat Sink And Processor

https://support.hpe.com/hpesc/public/videoDisplay?videoId=vpsg00003192en_us&noframe

1U Heat Sink and Processor removal

CAUTION: To avoid damage to the processor: Handle the processor only by the edges. Do not touch the bottom of the processor, especially the contact area.

CAUTION: THE PINS ON THE SYSTEM BOARD ARE VERY FRAGILE AND EASILY DAMAGED. To avoid damage to the system board:- Never install or remove a processor without using the processor installation tool.- Do not touch the processor socket contacts.- Do not tilt or slide the processor when lowering the processor into the socket.

Before you begin: Review and follow Precautions . Review and follow Power down procedures for the 1U server and remove the 1U system tray.**WARNING: To reduce the risk of personal injury from hot surfaces, allow the heat sink and processor to cool before touching them.**

1. Loosen both captive T-15 Torx screws that secure the heat sink to the system board.**CAUTION: To prevent the heat sink from tilting to one side during removal and replacement procedures, alternate between the two spring-loaded captive screws, three to four turns each when loosening and tightening. Do not over tighten the heat sinks spring-loaded screws to prevent them from breaking off. A maximum torque of 4 in-lb is set for the system.**
2. Lift the heat sink straight up and out of the system tray, being careful not to touch or spread the remaining thermal grease on the bottom.**IMPORTANT: If the processor may be reused in this or any other system, remove the thermal grease with an alcohol swab. Allow the alcohol to evaporate before you continue.**
3. If you are replacing the processor, open the processor locking lever and the processor socket retaining bracket.
4. Align the processor installation tool over the processor with the locking lever graphic correctly oriented.
5. Press in on the release tabs on the side of the tool and lower it onto the processor.

6. With the processor in place, release the tabs to firmly grasp the processor into the mouth of the tool.
7. Lift the processor straight up and out of the socket.
8. To help ensure that the processor remains in the tool, carefully rotate the tool, and then push in and release the tabs to secure the processor in the tool.

1U Heat Sink and Processor replacement

CAUTION: To prevent possible server malfunction, do not mix processors of different speeds or cache sizes. Refer to the documentation for a description of supported processors and processor speeds. CAUTION: The pins on the processor socket are very fragile. Any damage to them may require replacing the system board. CAUTION: Failure to completely open the processor locking lever prevents the processor from seating during installation, leading to hardware damage.

1. Insert the processor into the processor installation tool. Handle the processor by the edges only, and do not touch the bottom of the processor, especially the contact area.**CAUTION:** Ensure that the alignment pins on the tool are aligned with the cutouts on the processor. If the processor is not inserted correctly, it may be destroyed.**IMPORTANT: Be sure the processor remains inside the processor installation tool.**
2. Align the processor installation tool with the socket, and then install the processor.
3. Press the tabs on the processor installation tool to separate it from the processor, and then remove the tool.
4. Close the processor socket retaining bracket and the processor locking lever.**CAUTION:** Be sure to close the processor socket retaining bracket before closing the processor locking lever. The lever should close without resistance. Forcing the lever closed can damage the processor and socket, requiring system board replacement.**CAUTION: The heat sink thermal interface media is not reusable and must be replaced if the heat sink is removed from the processor after it has been installed.**
5. If you are reinstalling the old heat sink, use an alcohol wipe to clean off the old thermal grease from the heat sink. Allow the alcohol to evaporate before you continue.**CAUTION: To allow heat sink to draw as much heat as possible from the processor base, there must be good contact between the heat sink base and the top of the processor. To ensure good contact, you must apply thermal interface material.CAUTION: HP recommends using Shin-Etsu X-23-7783D thermal grease command for your ProLiant server.** Apply thermal grease in an 'S' pattern on the processor.**NOTE: A thermal grease pattern of five big dots is also acceptable.CAUTION: Applying too much grease creates a gap between the contact surfaces, significantly reducing the ability of the heat sink to draw out heat. Installing the heat sink with excessive grease can also cause the grease to spread over the processor pins or the system board base, which can cause electrical shorts that damage the system.**
6. Align the appropriate heat sink over the two standoffs in the system board.

7. While firmly holding the heat sink in place, tighten the two captive T-15 Torx screws to secure the heat sink to the system board.**CAUTION: Alternate between the two spring-loaded captive screws, three to four turns each when loosening and tightening. Do not over tighten the heat sinks spring-loaded screws to prevent them from breaking off. A maximum torque of 4 in-lb is set for the system.**

IOH Loopback Board

https://support.hpe.com/hpesc/public/videoDisplay?videoId=vpsg00003193en_us&noframe

IOH Loopback Board removal

Before you begin: Review and follow Precautions . Review and follow Power down procedures for the 1U server and remove the 1U system tray.

1. Grasp the IOH loopback board and carefully lift it straight up to disconnect it from the QPI connector on the system board.

IOH Loopback Board replacement

1. Align the connector on the bottom of the IOH loopback board with the QPI connector on the system board.
2. Press the IOH loopback board down firmly to fully seat the connector.

PCIe Expansion Card

https://support.hpe.com/hpesc/public/videoDisplay?videoId=vpsg00003194en_us&noframe

PCIe Expansion Card removal

Before you begin: Review and follow Precautions . Review and follow Power down procedures for the 1U server and remove the 1U system tray.

1. Remove the T-10 Torx screw that secures the PCIe assembly to the I/O front bezel.
2. Carefully and evenly pull the PCIe assembly straight up and off of the system board.**CAUTION: As in this example, the PCIe expansion card may contain a BBW cache module connected through a cable to a battery pack. Do not disconnect the battery pack cable from the cache module unless you are**

replacing the cache module or the battery pack and have all of the associated data backed up. Detaching the cable causes any unsaved data in the cache module to be lost.

3. Remove the T-15 Torx screw that secures the PCIe expansion card to the PCIe assembly.
4. Carefully and evenly pull the PCIe expansion card out of the PCIe slot in the PCIe riser card.

PCIe Expansion Card replacement

1. Align the PCIe expansion card with the PCIe slot in the PCIe riser card and insert it fully.
2. Replace T-15 Torx screw to secure the PCIe expansion card to the PCIe assembly.
3. Carefully align and evenly insert the PCIe assembly into the PCIe slot in the system board and fully seated in the 1U system tray.
4. Replace the T-10 Torx screw to secure the PCIe assembly to the I/O front bezel.

BBW Cache Module And Battery Pack

https://support.hpe.com/hpesc/public/videoDisplay?videoId=vpsg00003195en_us&noframe

BBW Cache Module and Battery Pack removal

Before you begin: Review and follow Precautions . Review and follow Power down procedures for the 1U server and remove the 1U system tray. Remove the PCIe assembly.**CAUTION: Do not detach the cable that connects the battery pack to the cache module until the data has been recovered. Detaching the cable causes any unsaved data in the cache module to be lost.**

1. Gently pull the bracket release tab away from the battery pack and slide the battery pack out of its bracket on the 1U system tray.
2. Open the cache module slot latches to release the BBW cache module from the cache module slot on the PCIe expansion card.
3. Lift the BBW cache module out of the cache module slot.
4. Disconnect the battery pack cable from the connector on the cache module.**NOTE: To recover cached data from a failed server, refer to the maintenance service guide.**

BBW Cache Module and Battery Pack replacement

1. Reconnect the battery pack cable to the BBW cache module.
2. Align the notch on the bottom of the BBW cache module with the key in the cache module slot on the PCIe expansion card.
3. Insert the BBW cache module fully into the slot.**IMPORTANT: Ensure that the BBW cache module is fully inserted and the slot latches are closed in around the module.**
4. Align the plastic tabs on the bottom of the battery pack with the slots in the battery pack bracket.
5. Insert the battery pack and slide it to the rear of the server until it clicks into position.

PCI Riser Card

https://support.hpe.com/hpesc/public/videoDisplay?videoId=vpsg00003196en_us&noframe

PCI Riser Card removal

Before you begin: Review and follow Precautions . Review and follow Power down procedures for the 1U server and remove the 1U system tray. Remove the PCIe assembly and the PCIe expansion card.

1. Remove the two T-15 Torx screws that secure the PCI riser card to the PCIe assembly bracket.
2. Remove the PCI riser card.

PCI Riser Card replacement

1. Align the PCI rise card standoffs with the screw holes in the PCIe assembly bracket.
2. Replace the two T-15 Torx screws to secure the PCI riser card to the PCIe assembly bracket.

MLB Power Cable

https://support.hpe.com/hpesc/public/videoDisplay?videoId=vpsg00003197en_us&noframe

MLB Power Cable removal

Before you begin: Review and follow Precautions . Review and follow Power down procedures for the 1U server and remove the 1U system tray. Remove the PCIe assembly.

1. Disconnect the MLB power cable from the connector on the system board.
2. Push the LED through the LED bracket in the I/O front bezel.
3. Remove the MLB power cable.

MLB Power Cable replacement

1. Carefully and fully insert the MLB power cable LED into the LED bracket in the I/O front bezel.
2. Connect the MLB power cable to the connector on the system board.

IB Enablement Board

https://support.hpe.com/hpesc/public/videoDisplay?videoId=vpsg00003198en_us&noframe

IB Enablement Board removal

Before you begin: Review and follow Precautions . Review and follow Power down procedures for the 1U server and remove the 1U system tray. Remove the PCIe assembly.

1. Grasp the IB Enablement board and carefully lift it straight up to disconnect it from its connector on the system board.

IB Enablement Board replacement

1. Align the connector on the bottom of the IB Enablement board with its connector on the system board.
2. Press the IB Enablement board down firmly to fully seat the connector.

System Battery

https://support.hpe.com/hpesc/public/videoDisplay?videoId=vpsg00003199en_us&noframe

System Battery removal

Before you begin: Review and follow Precautions and System battery considerations . Review and follow Power down procedures for the 1U server and remove the 1U system tray. Remove the PCIe assembly.

1. Push back on the release tab that secures the system battery in place.
2. Grasp the system battery and lift it out of its retaining bracket.

System Battery replacement

1. With the positive (+) side of the battery facing towards the inside of the server, place the battery fully into its retaining bracket with the release tab holding the battery in place.

Personality Board

https://support.hpe.com/hpesc/public/videoDisplay?videoId=vpsg00003200en_us&noframe

Personality Board removal

Before you begin: Review and follow Precautions . Review and follow Power down procedures for the 1U server and remove the 1U system tray. Remove the PCIe assembly.

1. Disconnect the RPS cable from the personality board.
2. Disconnect the power cables from the personality board.
3. Disconnect any additional cables from the personality board, noting their location for replacement.
4. Remove the five T-15 Torx screws that secure the personality board to the 1U system tray.
5. Slide the personality board out from under the tray cutout and then up and out of the 1U system tray.

Personality Board replacement

1. Toe the personality board into position aligned over the screw standoffs in the 1U system tray.
2. Replace the five T-15 Torx screws to secure the personality board to the 1U system tray.
3. Connect the power cables to the personality board.
4. Connect the RPS cable to the personality board.

5. Connect any additional cables to the personality board that were disconnected earlier.

System Board

https://support.hpe.com/hpesc/public/videoDisplay?videoId=vpsg00003201en_us&noframe

System Board removal

Before you begin: Review and follow Precautions . Review and follow Power down procedures for the 1U server and remove the 1U system tray. Remove the PCIe assembly.

1. Disconnect the MLB power cable from the system board.
2. Disconnect all SATA cables from the system board.
3. Disconnect the power cable from the system board.
4. Disconnect the RPS cable from the system board.
5. Remove the six T-15 Torx screws that secure the system board to the 1U system tray.
6. Slide system board toward the rear of the system tray then lift it up and out of the 1U system tray.

System Board replacement

NOTE: Remove the memory, heat sinks and processors, and possibly the IOH loopback board and IB Enablement board from the defective system board and transfer them to the new system board.

1. Carefully maneuver the system board into position in the 1U system tray about a half an inch back from the I/O front bezel.
2. Slide the system board forward until its connectors fit into the I/O front bezel and the holes in the system board align over the screw holes.
3. Replace the six T-15 Torx screws to secure the system board to the 1U system tray.
4. Connect RPS cable to the system board.
5. Connect the power cable to the system board.
6. Connect all SATA cables to the system board.
7. Connect the MLB power cable to the system board.

Hot-Plug Hard Disk Drive

https://support.hpe.com/hpesc/public/videoDisplay?videoId=vpsg00003202en_us&noframe

Hot-Plug Hard Disk Drives removal

Before you begin: Review and follow Precautions .**CAUTION: To prevent improper cooling and thermal damage, do not operate the server unless all bays are populated with either a component or a blank.**

1. Press the hot-plug button to release the handle.
2. Pull the handle back to disengage the hard disk drive and slide it out of the server.

Hot-Plug Hard Disk Drives replacement

1. Press the hot-plug button to release the handle.
2. Align and insert the hot-plug hard disk drive into the hard disk drive bay until it begins to engage.
3. Close the handle until it locks into place behind the hot-plug button.
4. Confirm that the hot-plug hard disk drive is fully seated into the server.

2U System Tray

https://support.hpe.com/hpesc/public/videoDisplay?videoId=vpsg00003203en_us&noframe

2U System Tray removal

Before you begin: Review and follow Precautions . Review and follow Power down procedures for the 2U server.**NOTE: The 2U half-width server trays fit into the left side only or the right side only of the S6500 chassis. The removal and replacement procedure is the same for both, with the exception of the location of the release handle. The release handle is always located on the outer end of the system tray.**

1. Press the release tab to unlock the release handle.
2. Pull the release handle and slide the 2U system tray out of the S6500 chassis until it stops.
3. Press in on the release button located on the outside edge of the 2U system tray and slide the server completely out of the chassis.**CAUTION: Be sure to support the 2U system tray from underneath.**
4. Place the 2U system tray on a flat anti-static surface.

5. Slide two 1U half-wide node blanks into the empty server bay.**NOTE: The same 1U half-wide node blank can be turned over to fit in either the left or right side of the S6500 chassis.**

2U System Tray replacement

1. If necessary, remove the two 1U half-node blanks from the appropriate server bay.
2. While supporting the 2U system tray from underneath, align and slide the 2U system tray all the way into the S6500 chassis until it is fully seated.
3. Press the release handle in until it locks into place behind the release tab.

Non Hot-Plug Hard Disk Drive

https://support.hpe.com/hpesc/public/videoDisplay?videoId=vpsg00003204en_us&noframe

Non Hot-Plug Hard Disk Drives removal

Before you begin: Review and follow Precautions . Review and follow Power down procedures for the 2U server and remove the 2U system tray.**WARNING: To reduce the risk of personal injury from hot surfaces, allow the hard disk drive to cool before touching it.**

1. Press the release tab and slide the HDD carrier forward.
2. Lift the HDD carrier out of the chassis.
3. Disconnect the SATA data and power cable from the hard disk drive.
4. If necessary remove the four P-1 Phillips-head screws that secure the hard disk drive to the HDD carrier and remove the hard disk drive.

Non Hot-Plug Hard Disk Drives replacement

1. If necessary, insert the hard disk drive into the HDD carrier and replace the four P-1 Phillips-head screws to secure the hard disk drive to the HDD carrier.
2. Connect the SATA data and power cable to the hard disk drive.
3. Lower the HDD carrier into position on the guide pins along the side of the 2U system tray.
4. Slide the HDD carrier back until it clicks into position.

Upper GPU Module

https://support.hpe.com/hpesc/public/videoDisplay?videoId=vpsg00003205en_us&noframe

Upper GPU Module removal

Before you begin: Review and follow Precautions . Review and follow Power down procedures for the 2U server and remove the 2U system tray.

1. Disconnect the power cable from the GPU module.
2. If appropriate, remove the two T-15 Torx screws that secure one end of the GPU module through the expansion bracket to the GPU shelf.**NOTE: Only GPU models M2050, M2070, M2090, and P1154 require expansion brackets.**
3. Remove the T-15 Torx screw that secures the other end of the GPU module to the GPU shelf.
4. Pull the GPU module out of the GPU slot in the 2U front riser board.
5. Remove the GPU module.

Upper GPU Module replacement

1. If necessary, add a GPU expansion bracket with three T-15 Torx screws to one end of the GPU module.
2. Lower the GPU module onto the GPU shelf and insert it into GPU slot in the 2U front riser board.
3. Repace the T-15 Torx screw to secure one end of the GPU module to the GPU shelf.
4. If appropriate, replace two T-15 Torx screws to secure the other end of the GPU module through the expansion bracket to the GPU shelf.**NOTE: Only GPU models M2050, M2070, M2090, and P1154 require expansion brackets.**
5. Connect the power cable to the GPU module.

GPU Power Board

https://support.hpe.com/hpesc/public/videoDisplay?videoId=vpsg00003206en_us&noframe

GPU Power Board removal

Before you begin: Review and follow Precautions . Review and follow Power down procedures for the 2U server and remove the 2U system tray.

1. Remove all cabling to the GPU power board, noting the locations for replacement.
2. Remove the three T-15 Torx screws that secure the GPU power board to the 2U system tray.
3. Remove the GPU power board from the 2U system tray.

GPU Power Board replacement

1. Align the GPU power board over the three standoffs in the 2U system tray.
2. Replace the three T-15 Torx screws to secure the GPU power board to the 2U system tray.
3. Connect all of the cabling to the GPU power board removed earlier.

Hard Disk Drive Cage And Backplane

https://support.hpe.com/hpesc/public/videoDisplay?videoId=vpsg00003207en_us&noframe

Hard Disk Drive Cage and Backplane removal

Before you begin: Review and follow Precautions . Review and follow Power down procedures for the 2U server and remove the 2U system tray. Remove all of the hard drives and hard drive blanks.

1. Remove the power cable from the hard disk drive backplane.
2. Remove the mini-SAS cable from the hard disk drive backplane.
3. Loosen the two captive T-15 Torx thumbscrews that secure the hard disk drive cage to the GPU Shelf and 2U system tray.
4. Slide the hard disk drive cage forward until it stops.
5. Lift the hard disk drive cage up and out of the 2U system tray.
6. Remove the two T-15 Torx screws that secure the hard disk drive backplane to the hard disk drive cage.
7. Remove the hard disk drive backplane.

Hard Disk Drive Cage and Backplane replacement

1. Align the hard disk drive backplane to the screw holes at the rear of the hard disk drive cage.
2. Replace the two T-15 Torx screws to secure the hard disk drive backplane to the hard disk drive cage.
3. Lower the hard disk drive cage over the guide pins in the side of the 2U system tray.
4. Slide the hard disk drive cage back until the front is flush with the I/O front bezel.
5. Tighten the two captive T-15 Torx thumbscrews to secure the hard disk drive cage to the GPU Shelf and 2U system tray.
6. Connect the mini-SAS cable to the hard disk drive backplane.
7. Connect the power cable to the hard disk drive backplane.

GPU Shelf

https://support.hpe.com/hpesc/public/videoDisplay?videoId=vpsg00003208en_us&noframe

GPU Shelf removal

Before you begin: Review and follow Precautions . Review and follow Power down procedures for the 2U server and remove the 2U system tray. Remove the hard disk drive cage without removing the hard disk drives or hard disk drive backplane.

1. Remove all cabling to any installed upper GPU modules and the 2U front riser board, noting the locations for replacement.
2. Loosen the four captive T-15 Torx thumbscrews that secure the GPU shelf to the 2U system tray.
3. Grasp the GPU shelf by its two handles and lift it straight up and out of the 2U system tray.

GPU Shelf replacement

1. Route all cables so that no cables are pinched or block access to the QPI connector on the system board.**NOTE: The IOH mezzanine card mounted on the bottom of the GPU shelf mates with to the QPI connector on the system board when the GPU shelf is fully seated.**
2. Make sure that the mini-SAS cable and a power cable are positioned to come up through opening in the GPU shelf to eventually connect to the hard disk drive backplane.
3. Align the GPU shelf with the guide pins and guide tabs in the 2U system trays.

4. Carefully lower the GPU shelf into position until it is fully seated.
5. Tighten the four captive T-15 Torx thumbscrews to secure the GPU shelf to the 2U system tray.
6. Connect all of the cabling removed earlier.

IOH Mezzanine Card

https://support.hpe.com/hpesc/public/videoDisplay?videoId=vpsg00003209en_us&noframe

IOH Mezzanine card removal

Before you begin: Review and follow Precautions . Review and follow Power down procedures for the 2U server and remove the 2U system tray. Remove the hard disk drive cage without removing the hard disk drives or hard disk drive backplane. Remove the GPU Shelf.

1. Place the GPU shelf on its side with the 2U front riser board flat on the surface.
2. Remove the three T-10 Torx screws that secure the IOH mezzanine card and bracket to the GPU shelf.
3. Pull the IOH mezzanine card out of its slot in the 2U front riser board.
4. Remove the two T-10 Torx screws that secure the IOH mezzanine card to its bracket.
5. Remove the IOH mezzanine card.

IOH Mezzanine card replacement

1. Align the IOH mezzanine card into its bracket over the screw holes and under the holder tabs.
2. Replace the two T-10 Torx screws to secure the IOH mezzanine card to its bracket.
3. Insert the IOH mezzanine card into its slot in the 2U front riser board until it is fully seated.
4. Replace the three T-10 Torx screws to secure the IOH mezzanine card and bracket to the GPU shef.

2U Front Riser Board

https://support.hpe.com/hpesc/public/videoDisplay?videoId=vpsg00003210en_us&noframe

2U Front Riser Board removal

Before you begin: Review and follow Precautions . Review and follow Power down procedures for the 2U server and remove the 2U system tray. Remove the hard disk drive cage without removing the hard disk drives or hard disk drive backplane. Remove all upper GPU modules, the GPU shelf, and the IOH mezzanine card.

1. Remove the two T-15 Torx screws that secure the 2U front riser board to the GPU shelf.
2. Slide the 2U front riser board forward enough to unlock it from the four alignment pins in the GPU shelf.
3. Remove the 2U front riser board from the GPU shelf.

2U Front Riser Board replacement

1. Carefully position the 2U front riser board onto the four alignment pins on the GPU shelf.
2. Slide the 2U front riser board back to lock it into place.
3. Replace the two T-15 Torx screws to secure the 2U front riser board to the GPU shelf.

Mini-SAS To SATA Cable

https://support.hpe.com/hpesc/public/videoDisplay?videoId=vpsg00003211en_us&noframe

Mini-SAS to SATA Cable removal

Before you begin: Review and follow Precautions . Review and follow Power down procedures for the 2U server and remove the 2U system tray. Remove the hard disk drive cage without removing the hard disk drives or hard disk drive backplane. Remove the GPU Shelf.

1. Disconnect the Mini-SAS to SATA cable from its multiple SATA and control cable connections on the system board, noting the cable labeling for exact replacement.

Mini-SAS to SATA Cable replacement

1. Connect the Mini-SAS to SATA cable to its multiple SATA and control cable connections on the system board, using the cable labeling to match the removed cable.

Lower GPU Module

https://support.hpe.com/hpesc/public/videoDisplay?videoId=vpsg00003212en_us&noframe

Lower GPU Module removal

Before you begin: Review and follow Precautions . Review and follow Power down procedures for the 2U server and remove the 2U system tray. Remove the hard disk drive cage without removing the hard disk drives or hard disk drive backplane. Remove the GPU Shelf.

1. If appropriate, remove the two T-15 Torx screws that secure one end of the GPU module through the expansion bracket to the GPU shelf.**NOTE: Only GPU models M2050, M2070, M2090, and P1154 require expansion brackets.**
2. Remove the T-15 Torx screw that secures the other end of the GPU module to the GPU shelf.
3. Loosen the two captive T-15 Torx thumbscrews that secure the rear GPU assembly to the 2U system tray.
4. Slide the rear GPU assembly away from the two alignment pins in the 2U system tray to make room for removing the GPU module.
5. Pull the GPU module out of the GPU slot in the GPU riser rear board.
6. Carefully lift the GPU module off of the rear GPU assembly and out of the 2U system tray.

Lower GPU Module replacement

1. If necessary, add a GPU expansion bracket with three T-15 Torx screws to one end of the GPU module.**NOTE: Only GPU models M2050, M2070, M2090, and P1154 require expansion brackets.**
2. Carefully lower the GPU module onto the rear GPU assembly and insert the GPU module into GPU slot in the GPU riser rear board.
3. Replace the T-15 Torx screw to secure one end of the GPU module to the rear GPU assembly.
4. If appropriate, replace two T-15 Torx screws to secure the other end of the GPU module through the expansion bracket to the rear GPU assembly.
5. Slide the rear GPU assembly under the two alignment pins.
6. Tighten the two captive T-15 Torx thumbscrews to secure the rear GPU assembly to the 2U system tray.

GPU Riser Rear Board

https://support.hpe.com/hpesc/public/videoDisplay?videoId=vpsg00003213en_us&noframe

GPU Riser Rear Board removal

Before you begin: Review and follow Precautions . Review and follow Power down procedures for the 2U server and remove the 2U system tray. Remove the hard disk drive cage without removing the hard disk drives or hard disk drive backplane. Remove the GPU Shelf and lower GPU module.

1. Lift the rear GPU assembly up and onto the top of the system tray.
2. While hold the rear GPU assembly in place, disconnect all SAS and power cables from the GPU riser rear board, noting their exact location for replacement.
3. Place the rear GPU assembly on a flat work surface.
4. Remove the four T-15 Torx screws that secure the GPU riser rear board from its bracket.
5. Lift and remove the GPU riser rear board.

GPU Riser Rear Board replacement

1. Align the GPU riser rear board with the screw holes in its bracket.
2. Replace the four T-15 Torx screws to secure the GPU riser rear board to its bracket.
3. Place the rear GPU assembly on the top of the 2U system tray to allow replacement of the cabling.
4. Reconnect all SAS and power cables to the GPU riser rear board in the exact location from which they were earlier removed.
5. Lower the rear GPU assembly into the 2U system tray just to the side of the two alignment pins.

X24 Riser Assembly

https://support.hpe.com/hpesc/public/videoDisplay?videoId=vpsg00003214en_us&noframe

x24 Riser Assembly removal

Before you begin: Review and follow Precautions . Review and follow Power down procedures for the 2U server and remove the 2U system tray. Remove the hard disk drive cage without removing the hard disk drives or hard disk drive backplane. Remove the GPU Shelf.

1. Disconnect all SAS cables from the x24 riser assembly, noting their exact location for replacement.
2. Loosen the captive T-15 Torx thumbscrew that secures the x24 riser assembly to the 2U system tray.
3. Remove the T-10 Torx screw that secures the x24 riser assembly to the I/O front bezel assembly.
4. Supporting both ends of the assembly, lift the x24 riser assembly carefully and evenly out of the PCIe slot in the system board and out of the 2U system tray.**CAUTION: As in this example, the PCIe expansion card may contain a BBW cache module connected through a cable to a battery pack. Do not disconnect the battery pack cable from the cache module unless you are replacing the cache module or the battery pack and have all of the associated data backed up. Detaching the cable causes any unsaved data in the cache module to be lost.**

x24 Riser Assembly replacement

1. Carefully align and evenly insert the x24 riser assembly into PCIe slot in the system board and fully seated in the 2U system tray.
2. Replace the T-10 Torx screw to secure the x24 riser assembly to the I/O front bezel.
3. Tighten the captive T-15 Torx thumbscrew to secure the x24 riser assembly to the 2U system tray.
4. Reconnect all SAS cables to the x24 riser assembly in the exact location from which they were earlier removed.

2U PCIe Expansion Card

https://support.hpe.com/hpesc/public/videoDisplay?videoId=vpsg00003215en_us&noframe

2U PCIe Expansion Card removal

Before you begin: Review and follow Precautions . Review and follow Power down procedures for the 2U server and remove the 2U system tray. Remove the hard disk drive cage without removing the hard disk drives or hard disk drive backplane. Remove the GPU Shelf and the x24 riser assembly.**CAUTION: As in this example, the PCIe expansion card may contain a BBW cache module connected through a cable to a battery pack. Do not disconnect the battery pack cable from the cache module unless you are replacing**

the cache module or the battery pack and have all of the associated data backed up. Detaching the cable causes any unsaved data in the cache module to be lost.

1. Remove the T-15 Torx screw that secures the PCIe expansion card to the x24 riser assembly.
2. Carefully and evenly pull the PCIe expansion card out of the PCIe slot in the x24 riser card.

2U PCIe Expansion Card replacement

1. Align the PCIe expansion card with the PCIe slot in the x24 riser card and insert it fully.
2. Replace T-15 Torx screw to secure the PCIe expansion card to the x24 riser assembly.

2U BBW Cache Module And Battery Pack

https://support.hpe.com/hpesc/public/videoDisplay?videoId=vpsg00003216en_us&noframe

2U BBW Cache Module and Battery Pack removal

Before you begin: Review and follow Precautions . Review and follow Power down procedures for the 2U server and remove the 2U system tray. Remove the hard disk drive cage without removing the hard disk drives or hard disk drive backplane. Remove the GPU Shelf and the x24 riser assembly.**CAUTION: Do not detach the cable that connects the battery pack to the cache module until the data has been recovered. Detaching the cable causes any unsaved data in the cache module to be lost.**

1. Gently pull the bracket release tab away from the battery pack and slide the battery pack out of its bracket on the 2U system tray.
2. Open the cache module slot latches to release the BBW cache module from the cache module slot on the PCIe expansion card.
3. Lift the BBW cache module out of the cache module slot.
4. Disconnect the battery pack cable from the connector on the cache module.**NOTE: To recover cached data from a failed server, refer to the maintenance service guide.**

2U BBW Cache Module and Battery Pack replacement

1. Reconnect the battery pack cable to the BBW cache module.
2. Align the notch on the bottom of the BBW cache module with the key in the cache module slot on the PCIe expansion card.

3. Insert the BBW cache module fully into the slot.**IMPORTANT: Ensure that the BBW cache module is fully inserted and the slot latches are closed in around the module.**
4. Align the plastic tabs on the bottom of the battery pack with the slots in the battery pack bracket.
5. Insert the battery pack and slide it toward the front of the server until it clicks into position.

X24 Riser Card

https://support.hpe.com/hpesc/public/videoDisplay?videoId=vpsg00003217en_us&noframe

x24 Riser Card removal

Before you begin: Review and follow Precautions . Review and follow Power down procedures for the 2U server and remove the 2U system tray. Remove the hard disk drive cage without removing the hard disk drives or hard disk drive backplane. Remove the GPU Shelf, x24 riser assembly and any installed PCIe expansion card.

1. Remove the four T-15 Torx screws that secure the x24 riser card to its bracket.
2. Lift and remove the x24 riser card off of its bracket.

x24 Riser Card replacement

1. Align the x24 riser card with the screw holes in its braket.
2. Replace the four T-15 Torx screws to secure the x24 riser card to its bracket.

2U MLB Power Cable

https://support.hpe.com/hpesc/public/videoDisplay?videoId=vpsg00003218en_us&noframe

2U MLB Power Cable removal

Before you begin: Review and follow Precautions . Review and follow Power down procedures for the 2U server and remove the 2U system tray. Remove the hard disk drive cage without removing the hard disk drives or hard disk drive backplane. Remove the GPU Shelf and the x24 riser assembly.

1. Disconnect the MLB power cable from the connector on the system board.

2. Push the LED through the LED bracket in the I/O front bezel.
3. Remove the MLB power cable.

2U MLB Power Cable replacement

1. Carefully and fully insert the MLB power cable LED into the LED bracket in the I/O front bezel.
2. Connect the MLB power cable to the connector on the system board.

2U IB Enablement Board

https://support.hpe.com/hpesc/public/videoDisplay?videoId=vpsg00003219en_us&noframe

2U IB Enablement Board removal

Before you begin: Review and follow Precautions . Review and follow Power down procedures for the 2U server and remove the 2U system tray. Remove the hard disk drive cage without removing the hard disk drives or hard disk drive backplane. Remove the GPU Shelf and the x24 riser assembly.

1. Grasp the IB Enablement board and carefully lift it straight up to disconnect it from its connector on the system board.

2U IB Enablement Board replacement

1. Align the connector on the bottom of the IB Enablement board with its connector on the system board.
2. Press the IB Enablement board down firmly to fully seat the connector.

2U Memory DIMM

https://support.hpe.com/hpesc/public/videoDisplay?videoId=vpsg00003220en_us&noframe

2U Memory DIMM removal

Before you begin: Review and follow Precautions . Review and follow Memory considerations . Review and follow Power down procedures for the 2U server and remove the 2U system tray. Remove the hard disk drive cage without removing the hard disk drives or hard disk drive backplane. Remove the GPU Shelf.

1. Open the DIMM slot latches.
2. Lift the DIMM up and out of the DIMM slot.
3. Place the DIMM in a static-dissipative bag.

2U Memory DIMM replacement

1. Ensure that the DIMM slot latches are open.
2. Remove the DIMM from its static-dissipative bag.
3. Locate the alignment notch on the DIMM and align it with the key in the DIMM slot.
4. Push the DIMM down firmly into the slot until the DIMM slot latches snap into place.
5. Ensure that the DIMM is fully inserted and properly seated in the slot.**CAUTION: The memory slots are structured to ensure proper installation. If you insert a memory module but it does not fit easily into the slot, you may have inserted it incorrectly. Double-check the orientation of the module and reinsert. If the holding clips do not close, the module is not inserted correctly.**

2U Heat Sink And Processor

https://support.hpe.com/hpesc/public/videoDisplay?videoId=vpsg00003221en_us&noframe

2U Heat Sink and Processor removal

CAUTION: To avoid damage to the processor: Handle the processor only by the edges. Do not touch the bottom of the processor, especially the contact area.

CAUTION: THE PINS ON THE SYSTEM BOARD ARE VERY FRAGILE AND EASILY DAMAGED. To avoid damage to the system board:- Never install or remove a processor without using the processor installation tool.- Do not touch the processor socket contacts.- Do not tilt or slide the processor when lowering the processor into the socket.

Before you begin: Review and follow Precautions . Review and follow Power down procedures for the 2U server and remove the 2U system tray. Remove the hard disk drive cage without removing the hard disk drives or hard disk drive backplane. Remove the GPU Shelf.**WARNING: To reduce the risk of personal injury from hot surfaces, allow the heat sink and processor to cool before touching them.**

1. Loosen both captive T-15 Torx screws that secure the heat sink to the system board.**CAUTION: To prevent the heat sink from tilting to one side during removal and replacement procedures, alternate between the two spring-loaded captive screws, three to four turns each when loosening and tightening. Do not over tighten the heat sinks spring-loaded screws to prevent them from breaking off. A maximum torque of 4 in-lb is set for the system.**
2. Lift the heat sink straight up and out of the system tray, being careful not to touch or spread the remaining thermal grease on the bottom.**IMPORTANT: If the processor may be reused in this or any other system, remove the thermal grease with an alcohol swab. Allow the alcohol to evaporate before you continue.**
3. If you are replacing the processor, open the processor locking lever and the processor socket retaining bracket.
4. Align the processor installation tool over the processor with the locking lever graphic correctly oriented.
5. Press in on the release tabs on the side of the tool and lower it onto the processor.
6. With the processor in place, release the tabs to firmly grasp the processor into the mouth of the tool.
7. Lift the processor straight up and out of the socket.
8. To help ensure that the processor remains in the tool, carefully rotate the tool, and then push in and release the tabs to secure the processor in the tool.

2U Heat Sink and Processor replacement

CAUTION: To prevent possible server malfunction, do not mix processors of different speeds or cache sizes. Refer to the documentation for a description of supported processors and processor speeds. CAUTION: The pins on the processor socket are very fragile. Any damage to them may require replacing the system board. CAUTION: Failure to completely open the processor locking lever prevents the processor from seating during installation, leading to hardware damage.

1. Insert the processor into the processor installation tool. Handle the processor by the edges only, and do not touch the bottom of the processor, especially the contact area.**CAUTION:** Ensure that the alignment pins on the tool are aligned with the cutouts on the processor. If the processor is not inserted correctly, it may be destroyed.**IMPORTANT: Be sure the processor remains inside the processor installation tool.**
2. Align the processor installation tool with the socket, and then install the processor.
3. Press the tabs on the processor installation tool to separate it from the processor, and then remove the tool.
4. Close the processor socket retaining bracket and the processor locking lever.**CAUTION:** Be sure to close the processor socket retaining bracket before closing the processor locking lever. The lever should close without resistance. Forcing the lever closed can damage the processor and socket, requiring system

board replacement.**CAUTION: The heat sink thermal interface media is not reusable and must be replaced if the heat sink is removed from the processor after it has been installed.**

5. If you are reinstalling the old heat sink, use an alcohol wipe to clean off the old thermal grease from the heat sink. Allow the alcohol to evaporate before you continue.**CAUTION: To allow heat sink to draw as much heat as possible from the processor base, there must be good contact between the heat sink base and the top of the processor. To ensure good contact, you must apply thermal interface material.CAUTION: HP recommends using Shin-Etsu X-23-7783D thermal grease command for your ProLiant server.** Apply thermal grease in an 'S' pattern on the processor.**NOTE: A thermal grease pattern of five big dots is also acceptable.CAUTION: Applying too much grease creates a gap between the contact surfaces, significantly reducing the ability of the heat sink to draw out heat. Installing the heat sink with excessive grease can also cause the grease to spread over the processor pins or the system board base, which can cause electrical shorts that damage the system.**
6. Align the appropriate heat sink over the two standoffs in the system board.
7. While firmly holding the heat sink in place, tighten the two captive T-15 Torx screws to secure the heat sink to the system board.**CAUTION: Alternate between the two spring-loaded captive screws, three to four turns each when loosening and tightening. Do not over tighten the heat sinks spring-loaded screws to prevent them from breaking off. A maximum torque of 4 in-lb is set for the system.**

2U System Battery

https://support.hpe.com/hpesc/public/videoDisplay?videoId=vpsg00003222en_us&noframe

2U System Battery removal

Before you begin: Review and follow Precautions and System battery considerations . Review and follow Power down procedures for the 2U server and remove the 2U system tray. Remove the hard disk drive cage without removing the hard disk drives or hard disk drive backplane. Remove the GPU Shelf and the x24 riser assembly.

1. Push back on the release tab that secures the system battery in place.
2. Grasp the system battery and lift it out of its retaining bracket.

2U System Battery replacement

1. With the positive (+) side of the battery facing towards the inside of the server, place the battery fully into its retaining bracket with the release tab holding the battery in place.

2U Personality Board

https://support.hpe.com/hpesc/public/videoDisplay?videoId=vpsg00003223en_us&noframe

2U Personality Board removal

Before you begin: Review and follow Precautions . Review and follow Power down procedures for the 2U server and remove the 2U system tray. Remove the hard disk drive cage without removing the hard disk drives or hard disk drive backplane. Remove the GPU Shelf.

1. Remove the three T-15 Torx screws that secure the GPU power board shelf to the 2U system tray, two on the outside and one on the bottom.
2. Carefully slide the GPU power board shelf out from under the alignment pin on the bottom of the 2U system tray and carefully lift it out of the way to gain access to the personality board below.
3. Disconnect the RPS cable from the personality board.
4. Disconnect the power cables from the personality board.
5. Disconnect any additional cables from the personality board, noting their location for replacement.
6. Remove the five T-15 Torx screws that secure the personality board to the 2U system tray.
7. Lift the personality board out of the 2U system tray.

2U Personality Board replacement

1. Place the personality board into position aligned over the screw standoffs in the 2U system tray.
2. Replace the five T-15 Torx screws to secure the personality board to the 2U system tray.
3. Connect the power cables to the personality board.
4. Connect the RPS cable to the personality board.
5. Connect any additional cables to the personality board that were disconnected earlier.
6. Reposition the GPU power board shelf onto its alignment pin and over its screw holes.
7. Replace the three T-15 Torx screws to secure the GPU power board shelf to the 2U system tray, one on the bottom and two on the outside.

2U System Board

https://support.hpe.com/hpesc/public/videoDisplay?videoId=vpsg00003224en_us&noframe

2U System board removal

Before you begin: Review and follow Precautions . Review and follow Power down procedures for the 2U server and remove the 2U system tray. Remove the hard disk drive cage without removing the hard disk drives or hard disk drive backplane. Remove the GPU Shelf and the x24 riser assembly.

1. Disconnect the MLB power cable from the system board.
2. Disconnect all SATA cables from the system board.
3. Disconnect the power cable from the system board.
4. Disconnect the RPS cable from the system board.
5. Remove the six T-15 Torx screws that secure the system board to the 2U system tray.
6. Slide system board toward the rear of the system tray then lift it up and out of the 2U system tray.

2U System board replacement

1. Carefully maneuver the system board into position in the 2U system tray about a half an inch back from the I/O front bezel.
2. Slide the system board forward until its connectors fit into the I/O front bezel and the holes in the system board align over the screw holes.
3. Replace the six T-15 Torx screws to secure the system board to the 2U system tray.
4. Connect RPS cable to the system board.
5. Connect the power cable to the system board.
6. Connect all SATA cables to the system board.
7. Connect the MLB power cable to the system board.

4U Hard Disk Drives

https://support.hpe.com/hpesc/public/videoDisplay?videoId=vpsg00003225en_us&noframe

4U Hard Disk Drives removal

Before you begin: Review and follow Precautions .**CAUTION:** To prevent improper cooling and thermal damage, do not operate the server unless all bays are populated with either a component or a blank.**NOTE: The 4U server supports SAS or SATA small form factor, SFF drives or solid state, SSD drives. When the drives are connected to the embedded SATA controller they are not hot-plug supported. For hot-plug support the drives must be connected to an optional SATA or SAS controller.**

1. Press the thumb release button to release the drive handle.
2. Pull the handle back to disengage the hard disk drive and slide it out of the server.

4U Hard Disk Drives replacement

1. Press the thumb release button to release the handle.
2. Align and insert the hard disk drive into the hard disk drive bay until it begins to engage.
3. Close the handle until it locks into place behind the thumb release button.
4. Confirm that the hard disk drive is fully seated into the server.

4U System Tray

https://support.hpe.com/hpesc/public/videoDisplay?videoId=vpsg00003226en_us&noframe

4U System Tray removal

Before you begin: Review and follow Precautions . Review and follow Power down procedures for the 4U server.**NOTE: The 4U half-width server trays fit into the left side only or the right side only of the S6500 chassis. The removal and replacement procedure is the same for both, with the exception of the location of the release handle. The release handle is always located on the outer end of the system tray.**

1. Press the release tab to unlock the release handle.
2. Pull the release handle and slide the 4U system tray out of the S6500 chassis until it stops.
3. Press in on the release button located on the outside edge of the 4U system tray and slide the server completely out of the chassis.**CAUTION: Be sure to support the 4U system tray from underneath.**
4. Place the 4U system tray on a flat anti-static surface.

5. Slide four 1U half-wide node blanks into the empty server bay.**NOTE: The same 1U half-wide node blank can be turned over to fit in either the left or right side of the S6500 chassis.**

4U System Tray replacement

1. If necessary, remove the four 1U half-node blanks from the appropriate server bay.
2. While supporting the 4U system tray from underneath, align and slide the 4U system tray all the way into the S6500 chassis until it is fully seated.
3. Press the release handle in until it locks into place behind the release tab.

4U Hard Disk Drive Cage And Backplane

https://support.hpe.com/hpesc/public/videoDisplay?videoId=vpsg00003227en_us&noframe

4U Hard Disk Drive Cage and Backplane removal

Before you begin: Review and follow Precautions . Review and follow Power down procedures for the 4U server and remove the 4U system tray. Remove all of the hard drives and hard drive blanks.

1. Remove the two T-15 Torx screws from the side front corners that secure the hard disk drive cage to the 4U system tray.
2. Loosen the two captive T-15 Torx thumbscrews.
3. Slide the hard disk drive cage forward and then tilt the cage forward to access the cables connected the disk drive cage backplane.
4. Remove the power cable from the hard disk drive backplane.
5. Remove one or two mini-SAS cables from the hard disk drive backplane.
6. Remove the I2C cable from the hard disk drive backplane.
7. Lift the hard disk drive cage up and out of the 4U system tray.
8. Remove the two T-15 Torx screws that secure the hard disk drive backplane to the hard disk drive cage.
9. Remove the hard disk drive backplane.

4U Hard Disk Drive Cage and Backplane replacement

1. Align the hard disk drive backplane within the metal guide tabs and the screw holes at the rear of the hard disk drive cage.
2. Replace the two T-15 Torx screws to secure the hard disk drive backplane to the hard disk drive cage.
3. Position the hard disk drive cage to allow access to connect the cables to the hard disk drive backplane.
4. Connect the I2C cable hard disk drive backplane.
5. Connect one or two, depending upon the configuration, mini-SAS cables to the hard disk drive backplane.
6. Connect the power cable to the hard disk drive backplane.
7. While being careful not to pinch any cables, lower the hard disk drive cage over the guide pins in the side of the 4U system tray.
8. Slide the hard disk drive cage back until the front is flush and the screw holes align.
9. Tighten the two captive T-15 Torx thumbscrews.
10. Replace the two T-15 Torx screws into the side front corners to secure the hard disk drive cage to the 4U system tray.

4U GPU Module

https://support.hpe.com/hpesc/public/videoDisplay?videoId=vpsg00003228en_us&noframe

4U GPU Module removal

Before you begin: Review and follow Precautions . Review and follow Power down procedures for the 4U server and remove the 4U system tray.

CAUTION: To prevent improper cooling and thermal damage, do not operate the server unless all slots in the 8 GPU shelf are populated with either a GPU module or a GPU blank.

1. Remove any shipping brackets holding the GPU module in place in the 8 GPU shelf.**NOTE: The middle bracket in the front bay is held in place with one removable T-10 Torx screw and one captive T-15 Torx thumbscrew. The middle bracket in the rear bay is held in place with two removable T-10 Torx screws. The end bracket in both bays can be rotated out of the way after loosening the two captive T-15 Torx thumbscrews.**
2. Disconnect the power cable from the GPU module.

3. Remove the two T-15 Torx screws that secure the front of the GPU module to the 8 GPU shelf.
4. Loosen the captive T-15 Torx screw that secures the rear bracket of the GPU module to the base of the 8 GPU shelf.**NOTE: A GPU blank is removed the same way but without the power cable connection.**

4U GPU Module replacement

1. If necessary, transfer a front and rear GPU bracket from either the removed GPU module or a GPU blank. GPU blanks come labeled with bracket installation instructions.
   a. For the front GPU bracket, remove the three P1 Phillips-head screws and remove the bracket.
   b. Align the front GPU bracket with the screw holes at the front of the GPU module.**NOTE: The screw holes will only align when the bracket is in the correct position.**
   c. Replace the three P1 Phillips-head screws to secure the front GPU bracket to the GPU module.
   d. For the rear GPU bracket, remove the three T-15 Torx screws and remove the bracket.
   e. Align the rear GPU bracket with the screw holes as shown.
   f. Replace the three T-15 Torx screws to secure the rear GPU bracket to the GPU module.
2. Using the alignment pins and empty slot as the guide, lower the GPU module into the 8 GPU shelf.
3. Once aligned, carefully, but firmly press the GPU module down until it is fully seated in the 8 GPU shelf slot.
4. Tighten the captive T-15 Torx screw to secure the rear bracket of the GPU module to the base of the 8 GPU shelf.
5. Replace the two T-15 Torx screws to secure the front of the GPU module to the 8 GPU shelf.
6. Connect the power cable to the GPU module.
7. If necessary, replace any shipping brackets.

8 GPU Shelf

https://support.hpe.com/hpesc/public/videoDisplay?videoId=vpsg00003229en_us&noframe

8 GPU Shelf removal

Before you begin: Review and follow Precautions . Review and follow Power down procedures for the 4U server and remove the 4U system tray. Remove the hard disk drive cage without removing the hard disk drives or hard disk drive backplane.

1. Remove all shipping brackets from the 8 GPU shelf.**NOTE: The middle bracket in the front bay is held in place with one removable T-10 Torx screw and one captive T-15 Torx thumbscrew. The middle bracket in the rear bay is held in place with two removable T-10 Torx screws. The end bracket is held in place by two captive T-15 Torx thumbscrews.**
2. Loosen the four captive T-15 Torx thumbscrews located at the rear of the 8 GPU shelf.
3. Loosen the four captive T-15 Torx screws, two on each side, that secure the 8 GPU shelf to the 4U system tray.
4. Loosen the two captive T-15 Torx thumbscrews located in the front inside of the 8 GPU shelf.
5. Grasp the GPU shelf by its front handle and the fan cut-outs at the rear and lift it straight up and out of the 4U system tray.

8 GPU Shelf replacement

NOTE: Transfer all GPU modules from the removed 8 GPU shelf to the new 8 GPU shelf. This can be done before or after removing the 8 GPU shelf from the 4U system tray.

1. Route all cables so that no cables are pinched or block access when the 8 GPU shelf is installed.**NOTE:** The bottom of the 8 GPU shelf mates with 4U Interposer module, 4U x24 riser module, and the power backplane module when the 8 GPU shelf is fully seated.
2. Make sure that all mini-SAS cables and I2C cable are positioned to come up in front of the 8 GPU shelf to eventually connect to the hard disk drive backplane.
3. Align the GPU shelf with the guide pins in the 4U system tray.
4. Carefully lower the 8 GPU shelf into position and press firmly until it is fully seated.
5. Tighten the two captive T-15 Torx thumbscrews located in the front inside of the 8 GPU shelf.
6. Tighten the four captive T-15 Torx screws, two on each side, that secure the 8 GPU shelf to the 4U system tray.
7. Tighten the four captive T-15 Torx thumbscrews located at the rear of the 8 GPU shelf.
8. If necessary, replace any shipping brackets.

4U Front Panel

https://support.hpe.com/hpesc/public/videoDisplay?videoId=vpsg00003230en_us&noframe

4U Front Panel removal

Before you begin: Review and follow Precautions . Review and follow Power down procedures for the 4U server and remove the 4U system tray. Remove the hard disk drive cage without removing the hard disk drives or hard disk drive backplane.

1. Lift the 4U front panel up just enough to clear the guide pin and pull forward out of the 4U system tray.

4U Front Panel replacement

1. Align the 4U front panel with the guide pin in the 4U system tray.
2. Move the 4U front panel in and down over the guide pin on one end and an alignment pin on the other in the 4U system tray.

4U Interposer Module With QPI Mezzanine Card

https://support.hpe.com/hpesc/public/videoDisplay?videoId=vpsg00003231en_us&noframe

4U Interposer Module with QPI Mezzanine Card removal

Before you begin: Review and follow Precautions . Review and follow Power down procedures for the 4U server and remove the 4U system tray. Remove the hard disk drive cage without removing the hard disk drives or hard disk drive backplane. Remove the 8 GPU shelf.

1. Loosen the two captive T-15 Torx screws that secure the Interposer assembly to the 4U system tray.
2. Grasp the 4U Interposer assembly and lift the assembly up and out of the 4U system tray.**NOTE:** The 4U Interposer module contains the Interposer riser card attached to the QPI mezzanine card.

4U Interposer Module with QPI Mezzanine Card replacement

1. Align the 4U Interposer assembly standoffs with the cutouts in the 4U system tray chassis wall.
2. Lower the 4U Interposer assembly until the standoffs are in the locked position.

3. Tighten the two captive T-15 Torx screws to secure the Interposer assembly to the 4U system tray.

4U Mini-SAS To SATA Cable

https://support.hpe.com/hpesc/public/videoDisplay?videoId=vpsg00003232en_us&noframe

4U Mini-SAS to SATA cable removal

Before you begin: Review and follow Precautions . Review and follow Power down procedures for the 4U server and remove the 4U system tray. Remove the hard disk drive cage without removing the hard disk drives or hard disk drive backplane. Remove the 8 GPU shelf, and the 4U interposer module with QPI mezzanine card.**NOTE:** This cable will only be installed when the embedded controller is used and not an optional controller.

1. Disconnect the Mini-SAS to SATA cable from its multiple SATA and control cable connections on the system board, noting the cable labeling for exact replacement.

4U Mini-SAS to SATA cable replacement

1. Connect the Mini-SAS to SATA cable to its multiple SATA and control cable connections on the system board, using the cable labeling to match the removed cable.

4U X24 Riser Assembly

https://support.hpe.com/hpesc/public/videoDisplay?videoId=vpsg00003233en_us&noframe

4U x24 Riser Assembly removal

Before you begin: Review and follow Precautions . Review and follow Power down procedures for the 4U server and remove the 4U system tray. Remove the hard disk drive cage without removing the hard disk drives or hard disk drive backplane. Remove the 8 GPU shelf, and the 4U front panel.

1. Remove the two T-15 Torx screws that secure the x24 riser assembly to the 4U system tray.
2. Remove the T-10 Torx screw that secures the x24 riser assembly to the I/O front bezel.
3. Grasp the x24 riser assembly at both ends and pull up just enough for the 4U system tray standoffs to clear, and pull the assembly up out of the 4U system tray.**CAUTION:** As in this example, the PCIe

expansion card may contain a BBW cache module connected through a cable to a battery pack. Do not disconnect the battery pack cable from the cache module unless you are replacing the cache module or the battery pack and have all of the associated data backed up. Detaching the cable causes any unsaved data in the cache module to be lost.

4U x24 Riser Assembly replacement

1. Align the x24 riser assembly with the PCIe slot in the system board, the standoffs in the 4U system tray chassis wall and the screw hole in the I/O front bezel.
2. While carefully guiding any cables attached to the PCIe expansion card, evenly insert the x24 riser assembly into PCIe slot in the system board until it is fully seated.
3. Replace the T-10 Torx screw to secure the x24 riser assembly to the I/O front bezel.
4. Replace the two T-15 Torx screws to secure the 4U front riser board to the GPU shelf.

4U PCIe Expansion Card

https://support.hpe.com/hpesc/public/videoDisplay?videoId=vpsg00003234en_us&noframe

4U PCIe Expansion Card removal

Before you begin: Review and follow Precautions . Review and follow Power down procedures for the 4U server and remove the 4U system tray. Remove the hard disk drive cage without removing the hard disk drives or hard disk drive backplane. Remove the 8 GPU shelf, 4U front panel, and the x24 riser assembly.

CAUTION: As in this example, the PCIe expansion card may contain a BBW cache module connected through a cable to a battery pack. Do not disconnect the battery pack cable from the cache module unless you are replacing the cache module or the battery pack and have all of the associated data backed up. Detaching the cable causes any unsaved data in the cache module to be lost.

1. Remove the T-15 Torx screw that secures the PCIe expansion card to the x24 riser assembly.
2. Carefully and evenly pull the PCIe expansion card out of the PCIe slot in the x24 riser card.

4U PCIe Expansion Card replacement

NOTE: For installation of a new PCIe expansion card:

1. Remove the the T-15 Torx screw and slot cover from the x24 riser assembly.

2. If necessary replace the full height bracket on the PCIe expansion card with a low profile bracket.

1. Align the PCIe expansion card with the PCIe slot in the x24 riser card and insert it fully.

2. Replace T-15 Torx screw to secure the PCIe expansion card to the x24 riser assembly.

4U BBW Cache Module And Battery Pack

https://support.hpe.com/hpesc/public/videoDisplay?videoId=vpsg00003235en_us&noframe

4U BBW Cache Module and Battery Pack removal

Before you begin: Review and follow Precautions . Review and follow Power down procedures for the 4U server and remove the 4U system tray. Remove the hard disk drive cage without removing the hard disk drives or hard disk drive backplane. Remove the 8 GPU shelf, 4U front panel, and the x24 riser assembly.**CAUTION:** Do not detach the cable that connects the battery pack to the cache module until the data has been recovered. Detaching the cable causes any unsaved data in the cache module to be lost.

1. Open the cache module slot latches to release the BBW cache module from the cache module slot on the PCIe expansion card.

2. Lift the BBW cache module out of the cache module slot.

3. Disconnect the battery pack cable from the connector on the cache module.**NOTE:** To recover cached data from a failed server, refer to the maintenance service guide.

4U BBW Cache Module and Battery Pack replacement

1. Reconnect the battery pack cable to the BBW cache module.

2. Align the notch on the bottom of the BBW cache module with the key in the cache module slot on the PCIe expansion card.

3. Insert the BBW cache module fully into the slot.**IMPORTANT: Ensure that the BBW cache module is fully inserted and the slot latches are closed in around the module.**

4U X24 Riser Card

https://support.hpe.com/hpesc/public/videoDisplay?videoId=vpsg00003236en_us&noframe

4U x24 Riser Card removal

Before you begin: Review and follow Precautions . Review and follow Power down procedures for the 4U server and remove the 4U system tray. Remove the hard disk drive cage without removing the hard disk drives or hard disk drive backplane. Remove the 8 GPU shelf, 4U front panel, the x24 riser assembly, and any installed PCIe expansion card.

1. Remove the five T-15 Torx screws that secure the x24 riser card to its bracket.
2. Lift and remove the x24 riser card off of its bracket.

4U x24 Riser Card replacement

1. Align the x24 riser card with the screw holes in its bracket.
2. Replace the five T-15 Torx screws to secure the x24 riser card to its bracket.**NOTE:** The two long screws are used in the front.

4U MLB Power Cable

https://support.hpe.com/hpesc/public/videoDisplay?videoId=vpsg00003237en_us&noframe

4U MLB Power Cable removal

Before you begin: Review and follow Precautions . Review and follow Power down procedures for the 4U server and remove the 4U system tray. Remove the hard disk drive cage without removing the hard disk drives or hard disk drive backplane. Remove the 8 GPU shelf, 4U front panel, and the x24 riser assembly.

1. Disconnect the MLB power cable from the connector on the system board.
2. Push the LED through the LED bracket in the I/O front bezel.
3. Remove the MLB power cable.

4U MLB Power Cable replacement

1. Carefully and fully insert the MLB power cable LED into the LED bracket in the I/O front bezel.
2. Connect the MLB power cable to the connector on the system board.

4U IB Enablement Board

https://support.hpe.com/hpesc/public/videoDisplay?videoId=vpsg00003238en_us&noframe

4U IB Enablement Board removal

Before you begin: Review and follow Precautions . Review and follow Power down procedures for the 4U server and remove the 4U system tray. Remove the hard disk drive cage without removing the hard disk drives or hard disk drive backplane. Remove the 8 GPU shelf, 4U front panel, and the x24 riser assembly.

1. Grasp the IB Enablement board and carefully lift it straight up to disconnect it from its connector on the system board.

4U IB Enablement Board replacement

1. Align the connector on the bottom of the IB Enablement board with its connector on the system board.
2. Press the IB Enablement board down firmly to fully seat the connector.

4U Memory DIMM

https://support.hpe.com/hpesc/public/videoDisplay?videoId=vpsg00003239en_us&noframe

4U Memory DIMM removal

Before you begin: Review and follow Precautions . Review and follow Power down procedures for the 4U server and remove the 4U system tray. Remove the hard disk drive cage without removing the hard disk drives or hard disk drive backplane. Remove the 8 GPU shelf.

1. Open the DIMM slot latches.
2. Lift the DIMM up and out of the DIMM slot.
3. Place the DIMM in a static-dissipative bag.

4U Memory DIMM replacement

1. Ensure that the DIMM slot latches are open.
2. Remove the DIMM from its static-dissipative bag.

3. Locate the alignment notch on the DIMM and align it with the key in the DIMM slot.
4. Push the DIMM down firmly into the slot until the DIMM slot latches snap into place.
5. Ensure that the DIMM is fully inserted and properly seated in the slot.**CAUTION:** The memory slots are structured to ensure proper installation. If you insert a memory module but it does not fit easily into the slot, you may have inserted it incorrectly. Double-check the orientation of the module and reinsert. If the holding clips do not close, the module is not inserted correctly.

4U Heat Sink And Processor

https://support.hpe.com/hpesc/public/videoDisplay?videoId=vpsg00003240en_us&noframe

4U Heat Sink and Processor removal

CAUTION: To avoid damage to the processor: Handle the processor only by the edges. Do not touch the bottom of the processor, especially the contact area.

CAUTION: THE PINS ON THE SYSTEM BOARD ARE VERY FRAGILE AND EASILY DAMAGED. To avoid damage to the system board:- Never install or remove a processor without using the processor installation tool.- Do not touch the processor socket contacts.- Do not tilt or slide the processor when lowering the processor into the socket.

Before you begin: Review and follow Precautions . Review and follow Power down procedures for the 4U server and remove the 4U system tray. Remove the hard disk drive cage without removing the hard disk drives or hard disk drive backplane. Remove the 8 GPU shelf.

WARNING: To reduce the risk of personal injury from hot surfaces, allow the heat sink and processor to cool before touching them.

1. Loosen both captive T-15 Torx screws that secure the heat sink to the system board.**CAUTION: To prevent the heat sink from tilting to one side during removal and replacement procedures, alternate between the two spring-loaded captive screws, three to four turns each when loosening and tightening. Do not over tighten the heat sinks spring-loaded screws to prevent them from breaking off. A maximum torque of 4 in-lb is set for the system.**
2. Lift the heat sink straight up and out of the system tray, being careful not to touch or spread the remaining thermal grease on the bottom.**IMPORTANT: If the processor may be reused in this or any other system, remove the thermal grease with an alcohol swab. Allow the alcohol to evaporate before you continue.**
3. If you are replacing the processor, open the processor locking lever and the processor socket retaining bracket.
4. Align the processor installation tool over the processor with the locking lever graphic correctly oriented.

5. Press in on the release tabs on the side of the tool and lower it onto the processor.
6. With the processor in place, release the tabs to firmly grasp the processor into the mouth of the tool.
7. Lift the processor straight up and out of the socket.
8. To help ensure that the processor remains in the tool, carefully rotate the tool, and then push in and release the tabs to secure the processor in the tool.

4U Heat Sink and Processor replacement

CAUTION: To prevent possible server malfunction, do not mix processors of different speeds or cache sizes. Refer to the documentation for a description of supported processors and processor speeds. CAUTION: The pins on the processor socket are very fragile. Any damage to them may require replacing the system board. CAUTION: Failure to completely open the processor locking lever prevents the processor from seating during installation, leading to hardware damage.

1. Insert the processor into the processor installation tool. Handle the processor by the edges only, and do not touch the bottom of the processor, especially the contact area.**CAUTION:** Ensure that the alignment pins on the tool are aligned with the cutouts on the processor. If the processor is not inserted correctly, it may be destroyed.**IMPORTANT: Be sure the processor remains inside the processor installation tool.**
2. Align the processor installation tool with the socket, and then install the processor.
3. Press the tabs on the processor installation tool to separate it from the processor, and then remove the tool.
4. Close the processor socket retaining bracket and the processor locking lever.**CAUTION:** Be sure to close the processor socket retaining bracket before closing the processor locking lever. The lever should close without resistance. Forcing the lever closed can damage the processor and socket, requiring system board replacement.**CAUTION: The heat sink thermal interface media is not reusable and must be replaced if the heat sink is removed from the processor after it has been installed.**
5. If you are reinstalling the old heat sink, use an alcohol wipe to clean off the old thermal grease from the heat sink. Allow the alcohol to evaporate before you continue.**CAUTION: To allow heat sink to draw as much heat as possible from the processor base, there must be good contact between the heat sink base and the top of the processor. To ensure good contact, you must apply thermal interface material.CAUTION: HP recommends using Shin-Etsu X-23-7783D thermal grease command for your ProLiant server.** Apply thermal grease in an 'S' pattern on the processor.**NOTE: A thermal grease pattern of five big dots is also acceptable.CAUTION: Applying too much grease creates a gap between the contact surfaces, significantly reducing the ability of the heat sink to draw out heat. Installing the heat sink with excessive grease can also cause the grease to spread over the processor pins or the system board base, which can cause electrical shorts that damage the system.**

6. Align the appropriate heat sink over the two standoffs in the system board.
7. While firmly holding the heat sink in place, tighten the two captive T-15 Torx screws to secure the heat sink to the system board.**CAUTION: Alternate between the two spring-loaded captive screws, three to four turns each when loosening and tightening. Do not over tighten the heat sinks spring-loaded screws to prevent them from breaking off. A maximum torque of 4 in-lb is set for the system.**

4U System Battery

https://support.hpe.com/hpesc/public/videoDisplay?videoId=vpsg00003241en_us&noframe

4U System Battery removal

Before you begin: Review and follow Precautions . Review and follow Power down procedures for the 4U server and remove the 4U system tray. Remove the hard disk drive cage without removing the hard disk drives or hard disk drive backplane. Remove the 8 GPU shelf, 4U front panel, and the x24 riser assembly.

1. Push back on the release tab that secures the system battery in place.
2. Grasp the system battery and lift it out of its retaining bracket.

4U System Battery replacement

1. With the positive (+) side of the battery facing towards the inside of the server, place the battery fully into its retaining bracket with the release tab holding the battery in place.

4U System Board

https://support.hpe.com/hpesc/public/videoDisplay?videoId=vpsg00003242en_us&noframe

4U System Board removal

Before you begin: Review and follow Precautions . Review and follow Power down procedures for the 4U server and remove the 4U system tray. Remove the hard disk drive cage without removing the hard disk drives or hard disk drive backplane. Remove the 8 GPU shelf, the 4U interposer module with QPI mezzanine card, 4U front panel, and the x24 riser assembly.

1. Disconnect the MLB power cable from the system board.

2. Disconnect the power cable from the system board.
3. Disconnect the RPS cable from the system board.
4. Remove the six T-15 Torx screws that secure the system board to the 4U system tray.
5. Slide system board toward the rear of the system tray then lift it up and out of the 4U system tray.

4U System Board replacement

NOTE: Remove the memory, heat sinks and processors, IB Enablement board, and if attached, the Mini-SAS to SATA Cable or the I2C cable from the defective system board and transfer them to the new system board.

1. Carefully maneuver the system board into position in the 4U system tray about a half an inch back from the I/O front bezel.
2. Slide the system board forward until its connectors fit into the I/O front bezel and the holes in the system board align over the screw holes.
3. Replace the six T-15 Torx screws to secure the system board to the 4U system tray.
4. Connect RPS cable to the system board.
5. Connect the power cable to the system board.
6. Connect the MLB power cable to the system board.

4U Personality Board

https://support.hpe.com/hpesc/public/videoDisplay?videoId=vpsg00003243en_us&noframe

4U Personality Board removal

Before you begin: Review and follow Precautions . Review and follow Power down procedures for the 4U server and remove the 4U system tray.

NOTE: The 4U system tray contains three personality boards, each mounted to its own shelf.

1. Remove the two T-15 Torx screws that secure the personality board shelf to the chassis wall of the 4U system tray.
2. Grasp the personality board and shelf and disconnect it from it power connector.
3. Remove the three T-15 Torx screws that secure the personality board to its shelf.

4. Remove the personality board.

4U Personality Board replacement

1. Align the personality board onto its shelf over the screw holes.
2. Replace the three T-15 Torx screws to secure the personality board to its shelf.
3. Insert the personality board into its power connector until it is fully seated.
4. Replace the two T-15 Torx screws to secure the personality board shelf to the chassis wall of the 4U system tray.

4U Power BP Module

https://support.hpe.com/hpesc/public/videoDisplay?videoId=vpsg00003244en_us&noframe

4U Power BP Module removal

Before you begin: Review and follow Precautions . Review and follow Power down procedures for the 4U server and remove the 4U system tray. Remove the hard disk drive cage without removing the hard disk drives or hard disk drive backplane. Remove the 8 GPU shelf.

1. Loosen the two captive T-15 Torx screws that secure the removable inner chassis wall of the 4U system tray.
2. Lift the removable inner chassis wall and set aside.
3. Disconnect the power cable from the power backplane.
4. Remove the four T-15 Torx screws that secure the power backplane to the base bracket of the 4U system tray.
5. Remove the two T-15 Torx screws that secure the power bus bar to the outer chassis wall of the 4U system tray.
6. Remove the three T-15 Torx screws that secure the power bus bar to the inner chassis wall of the 4U system tray.
7. Pull the power bus bar away from the personality boards to disconnect it from the three personality boards.
8. Lift the Power BP module out of the 4U system tray.

4U Power BP Module replacement

1. Connect the large power cable and the RPS cable to the power module.
2. Reposition the power module into its compartment in the 4U system tray.
3. Replace the two T-15 Torx screws to secure the power module to the base of the 4U system tray.
4. Connect both power cables to the front of the power module.
5. Replace the T-10 Torx screw to secure the power module bracket to the rear of the 4U system tray.
6. Slide in the bottom personality board on its shelf.
7. Replace the two T-15 Torx screws to secure the bottom personality board shelf to the chassis wall of the 4U system tray.

4U Power Module

https://support.hpe.com/hpesc/public/videoDisplay?videoId=vpsg00003245en_us&noframe

4U Power Module removal

Before you begin: Review and follow Precautions . Review and follow Power down procedures for the 4U server and remove the 4U system tray. Remove the hard disk drive cage without removing the hard disk drives or hard disk drive backplane. Remove the 8 GPU shelf and the power BP module.

1. Remove the two T-15 Torx screws that secure the bottom personality board shelf to the chassis wall of the 4U system tray.
2. Slide out the bottom personality board on its shelf.
3. Remove the T-10 Torx screw that secures the power module bracket to the rear of the 4U system tray.
4. Disconnect both power cables from the front of the power module.
5. Remove the two T-15 Torx screws that secure the power module to the base of the 4U system tray.
6. Carefully tilt up the front of the power module and pull it out enough to access the attached cables.
7. Disconnect the RPS cable and the large power cable from the power module.
8. Remove the power module from the 4U system tray.

4U Power Module replacement

1. Connect the large power cable and the RPS cable to the power module.
2. Reposition the power module into its compartment in the 4U system tray.
3. Replace the two T-15 Torx screws to secure the power module to the base of the 4U system tray.
4. Connect both power cables to the front of the power module.
5. Replace the T-10 Torx screw to secure the power module bracket to the rear of the 4U system tray.
6. Slide in the bottom personality board on its shelf.
7. Replace the two T-15 Torx screws to secure the bottom personality board shelf to the chassis wall of the 4U system tray.