HPE ProLiant XL225n Gen10 Plus Server User Guide

Part Number: 10-150137-Q324
Published: May 2024
Edition: 5

HPE ProLiant XL225n Gen10 Plus Server User Guide

Abstract

This document is for the person who installs, administers, and troubleshoots servers and storage systems. Hewlett Packard Enterprise assumes you are qualified in the servicing of computer equipment and trained in recognizing hazards in products with hazardous energy levels, and are familiar with the weight and stability precautions for rack installations.

Part Number: 10-150137-Q324
Published: May 2024
Edition: 5

© Copyright 2024 Hewlett Packard Enterprise Development LP

Notices

The information contained herein is subject to change without notice. The only warranties for Hewlett Packard Enterprise products and services are set forth in the express warranty statements accompanying such products and services. Nothing herein should be construed as constituting an additional warranty. Hewlett Packard Enterprise shall not be liable for technical or editorial errors or omissions contained herein.

Confidential computer software. Valid license from Hewlett Packard Enterprise required for possession, use, or copying. Consistent with FAR 12.211 and 12.212, Commercial Computer Software, Computer Software Documentation, and Technical Data for Commercial Items are licensed to the U.S. Government under vendor's standard commercial license.

Links to third-party websites take you outside the Hewlett Packard Enterprise website. Hewlett Packard Enterprise has no control over and is not responsible for information outside the Hewlett Packard Enterprise website.

Acknowledgments

AMD and AMD EPYC are trademarks of Advanced Micro Devices, Inc.

Linux® is the registered trademark of Linus Torvalds in the U.S. and other countries.

Microsoft®, Windows®, and Windows Server® are registered trademarks or trademarks of Microsoft Corporation in the United States and/or other countries.

Red Hat® Enterprise Linux® are registered trademarks of Red Hat, Inc. in the United States and other countries.

VMware ESXi™ and VMware vSphere® are registered trademarks or trademarks of VMware, Inc. in the United States and/or other jurisdictions.

All third-party marks are property of their respective owners.

Table of contents

HPE Apollo 2000 Gen10 Plus System 9
Component identification 9
Server node numbering 10
Server node orientation 10
Rear panel components 11
Selecting the NIC port for the iLO interface 12
Information pull tab 12
Rear panel LEDs and button 14
Front panel LED power fault codes 15
System board components 16
DIMM slot locations 17
DIMM label identification 18
Processor and socket components 20
System maintenance switch descriptions 21
Riser board components 22
Primary riser board components 22
Secondary riser board components 22
PCIe4 slot description 24
Direct liquid cooling system 25
Server-to-DLC manifold interconnect tube set 26
Processor cooling loop components 27
DIMM-processor cooling loop components 28
Operations 30
Power up the server 31
Power down the server 31
Power capping 32
Power capping using HPE Apollo Platform Manager 33
Power capping using the HPE iLO web interface 34
Power capping with HPE Performance Cluster Manager 34
Remove the server blank 35
Disconnect the tube set 35
Remove the server 36
Remove the node cover 38
Remove the air baffle 39

Remove the primary riser....40
Remove the secondary riser....42
Install the secondary riser....44
Install the primary riser....46
Install the air baffle....47
Install the node cover....48
Install the server....49
Connect the tube set....50
Setup....51
General site planning....52
Optional service....52
Compiling the documentation....53
Initial system installation....53
HPE Installation Service....53
Setting up the server....54
Operational requirements....57
Site requirements....57
Space and airflow requirements....58
Temperature requirements....59
Power requirements....59
Grounding requirements....60
Device bay thermal requirements....60
Server warnings and cautions....61
Electrostatic discharge....62
POST screen options....62
Hardware options installation....63
Hardware option installation guidelines....64
SUV cable option....64
SUV cable components....65
Using the SUV cable in a KVM setup....66
Using the SUV cable to access a USB drive in a KVM setup....66
Transceiver option....67
Transceiver warnings and cautions....68
Installing a transceiver....68
PCIe riser options....70
Installing the primary riser board....70
Installing the secondary riser board....73
Storage controller cable options....80

Installing a storage controller cable ... 81
Storage controller options ... 90
Installing a Smart Array type-p controller in the secondary riser ... 90
Configuring an HPE Smart Array Gen10 controller ... 97
Expansion card options ... 97
PCIe expansion option population rules ... 98
Installing an expansion card in the primary riser ... 98
Installing an expansion card in the secondary riser ... 102
OCP NIC 3.0 adapter option ... 108
Installing the OCP NIC 3.0 adapter ... 108
Processor and heatsink options ... 110
Installing the processor and heatsink options ... 110
Processor cautions ... 111
Installing a processor ... 111
Installing a heatsink ... 115
Memory options ... 118
DIMM population information ... 119
HPE SmartMemory speed information ... 119
Installing a DIMM ... 119
Mezzanine card option ... 126
Installing the mezzanine card for internal USB device ... 126
HPE Trusted Platform Module 2.0 Gen10 Plus option ... 128
Overview ... 129
HPE Trusted Platform Module 2.0 guidelines ... 129
Installing and enabling the HPE TPM 2.0 Gen10 Plus option ... 130
Installing the Trusted Platform Module board ... 130
Preparing the server for installation ... 131
Installing the TPM board and cover ... 132
Preparing the server for operation ... 134
Enabling the Trusted Platform Module ... 135
Enabling the Trusted Platform Module as TPM 2.0 ... 135
Enabling the Trusted Platform Module as TPM 1.2 ... 136
Retaining the BitLocker recovery key/password ... 137
Cabling ... 137
Cabling guidelines ... 137
Node power button cabling ... 139
Storage cabling ... 140
Onboard SATA controller cabling ... 140

HPE Smart Array type-p controller cabling....141
Storage controller backup power cabling....142
Pump-cold plate signal cabling....143
Pump-cold plate signal cabling: Processor cooling loop....144
Pump-cold plate signal cabling: DIMM-processor cooling loop....144
Software and configuration utilities....145
Server mode....145
iLO....146
iLO Federation....146
GUID-5284E08F-722A-4E3C-806B-A23F15F4BDF0.xml....
RESTful Interface Tool....147
iLO Amplifier Pack....147
Integrated Management Log....147
Intelligent Provisioning....148
Management security....149
Scripting Toolkit for Windows and Linux....149
Bright Cluster Manager....150
UEFI System Utilities....150
Selecting the boot mode....151
Secure Boot....151
Launching the Embedded UEFI Shell....152
Smart Storage Administrator....153
HPE InfoSight for servers....154
USB support....154
External USB functionality....154
Redundant ROM support....155
Safety and security benefits....155
Keeping the system current....155
Updating firmware or system ROM....156
Service Pack for ProLiant....156
Introduction to Smart Update Manager....157
Integrated Smart Update Tools....157
Updating firmware from the System Utilities....158
Updating the firmware from the UEFI Embedded Shell....159
Online Flash components....159
Drivers....160
Software and firmware....160
Operating system version support....160

HPE Pointnext Portfolio....161
Proactive notifications....161
Troubleshooting....161
NMI functionality....162
Troubleshooting resources....162
Safety, warranty, and regulatory information....162
Regulatory information....163
Notices for Eurasian Economic Union....163
Turkey RoHS material content declaration....164
Ukraine RoHS material content declaration....165
Warranty information....165
System battery replacement....165
Removing and replacing the system battery....166
Specifications....168
Environmental specifications....169
Limited system operating temperature requirements....169
Mechanical specifications....170
Websites....170
Support and other resources....171
Accessing Hewlett Packard Enterprise Support....171
Accessing updates....171
Remote support....172
Documentation feedback....173

HPE Apollo 2000 Gen10 Plus System

The HPE Apollo 2000 Gen10 Plus System is a dense, multiserver platform that packs incredible performance and workload flexibility into a small data center space. The system offers a density-optimized, shared infrastructure with a flexible scale-out architecture. The system supports a variety of workloads from remote site systems to large HPC clusters and everything in between.

Chassis

The HPE Apollo n2000 Gen10 Plus series chassis occupies 2U space in the rack.

- HPE Apollo n2400 Gen10 Plus Chassis—This model has no drives, drive backplanes, and system interconnect assemblies. This model provides optimum power and cooling efficiencies ideal for high-power processor configurations.
- HPE Apollo n2600 Gen10 Plus Chassis
  - This model supports the following storage configurations:
    - 8 SFF SAS/SATA/NVMe drive configuration
    - 24 SFF SAS/SATA drive configuration
  - Drives are allocated equally across all server nodes.

Server node

- HPE ProLiant XL225n Gen10 Plus Server—1U, dual-processor AMD server node

For more information about product features, specifications, options, configurations, and compatibility, see the product QuickSpecs on the Hewlett Packard Enterprise website (**https://www.hpe.com/info/qs**).

Component identification

Subtopics

Server node numbering
Server node orientation
Rear panel components
Rear panel LEDs and button
System board components
Riser board components
Direct liquid cooling system

Server node numbering

1U system: Server node numbering

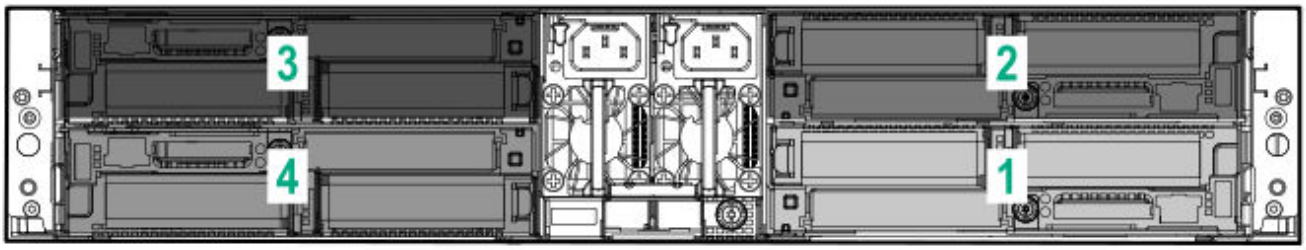

Server node orientation

The server node cover facilitates smooth node entry and ejection from the bay. When installing the server into the bay, observe the correct node orientation.

- Left side—The node cover must be facing down with the release lever on the top side of the bay.
- Right side—The node cover must be facing up with the release lever on the bottom side of the bay.

The following image is shown from the perspective of a user facing the chassis rear panel. The release lever is shown in amber color.

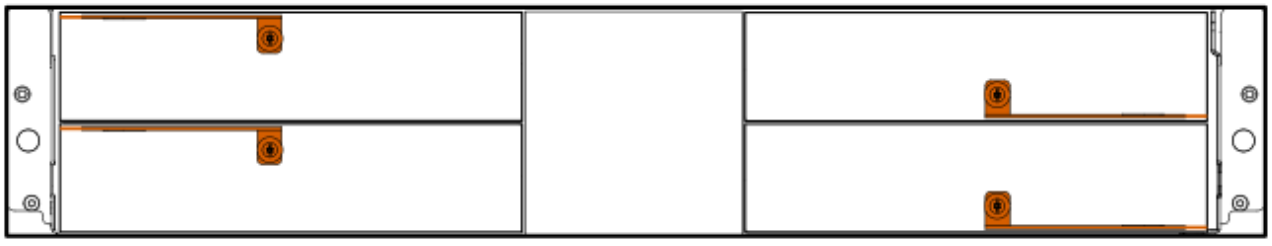

Rear panel components

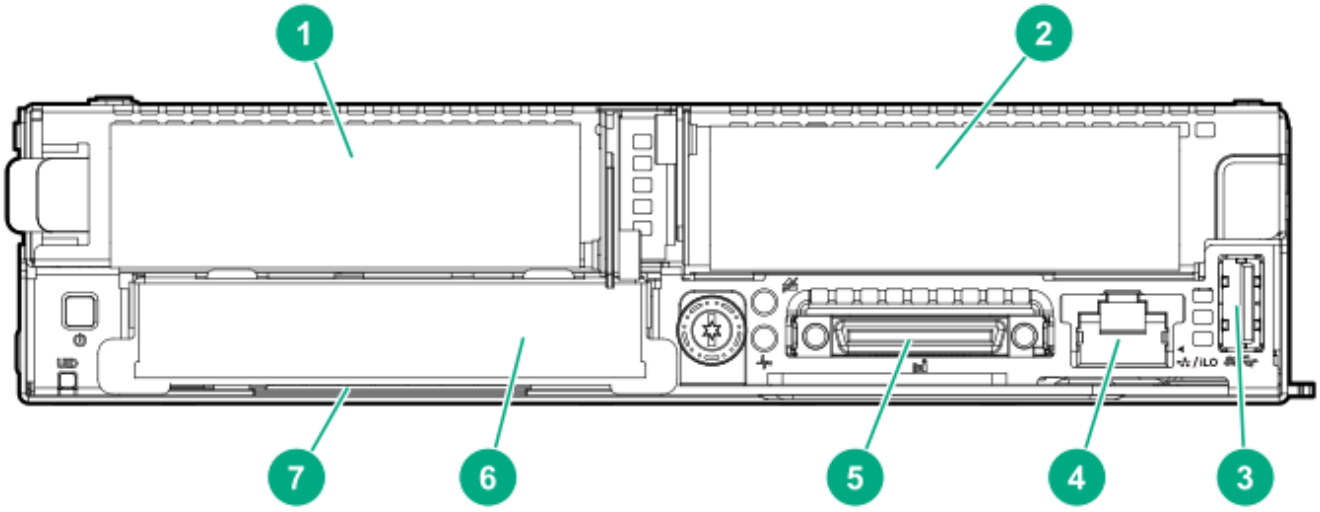

Item	Description
1	Slot 1 PCIe4 x16 (16, 8, 4, 2, 1)
2	Slot 2 PCIe4 x16 (16, 8, 4, 2, 1) [1]
3	USB 3.2 Gen 1 Type-A port
4	NIC/shared iLO network port [2]
5	SUV port
6	OCP 3.0 NIC adapter slot
7	Information pull tab

[1] When the P2 secondary riser is installed, PCIe Gen4 devices installed in the riser will only operate in PCIe Gen3 speed (8 GT/s transferrate).

[2] To specify the NIC port for the iLO interface, use the **Network Options** menu in the UEFI System Utilities. For more information, see Selecting the NIC port for the iLO interface.

Subtopics

Selecting the NIC port for the iLO interface

Information pull tab

Selecting the NIC port for the iLO interface

Procedure

1. During the server startup sequence, press **F9** to access the UEFI System Utilities.
2. From the **System Utilities** screen, select **System Configuration > iLO 5 Configuration Utility > Network Options**.
3. In the **Network Interface Adapter** field, select the preferred NIC port for the iLO interface:
   - **On**—Uses the iLO port in the RCM module option.
   - **Off**—Disables all network interfaces to iLO.
   - **Shared Network Port – LOM**—Uses the onboard NIC/shared iLO network port (default).
   - **Shared Network Port – FlexibleLOM/OCP**—Uses the NIC port in the OCP NIC 3.0 adapter option.
4. Save the setting.

Information pull tab

Figure 1. HPE Apollo n2600 Gen10 Plus Chassis

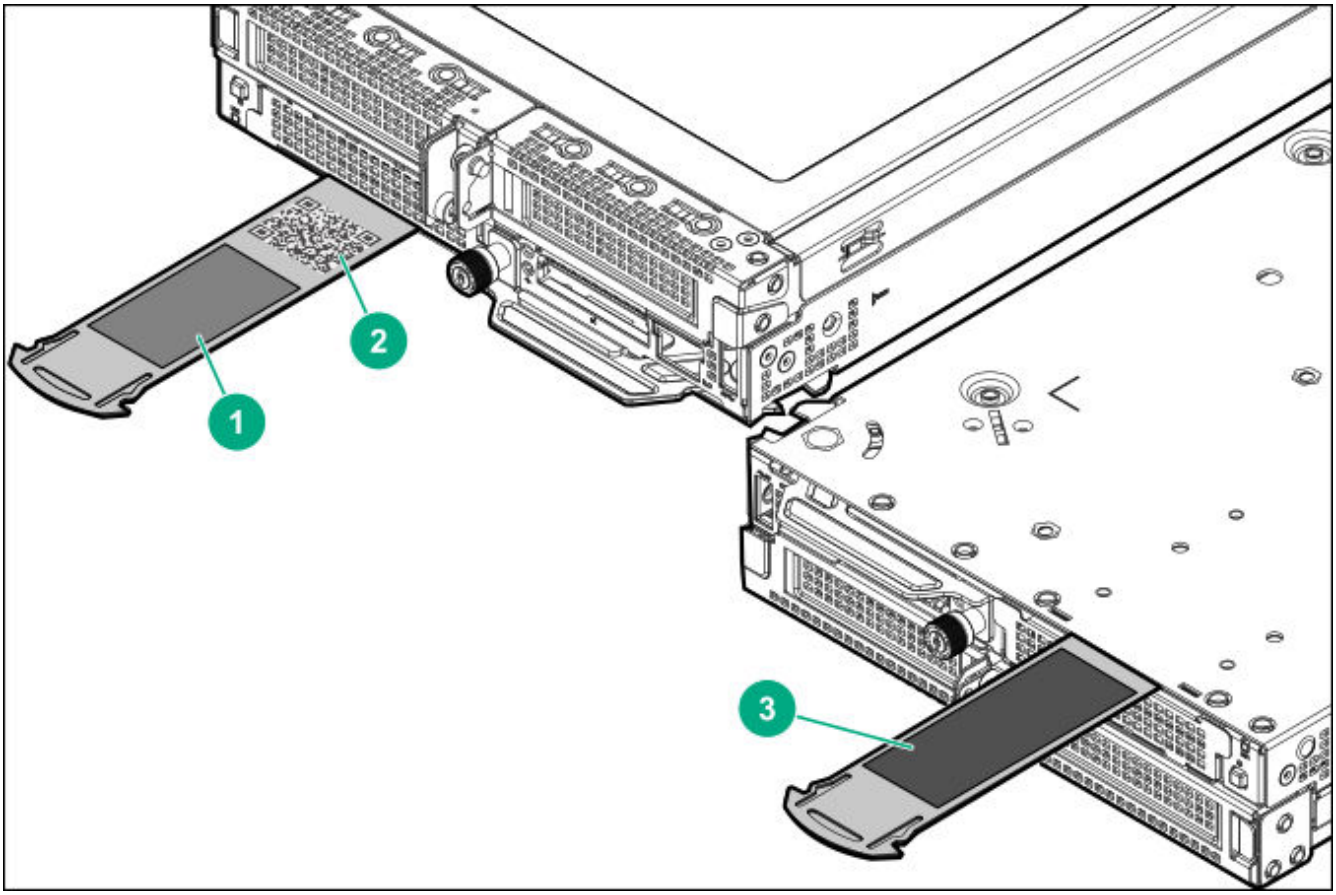

Figure 2. HPE Apollo n2610 Gen10 Plus Chassis

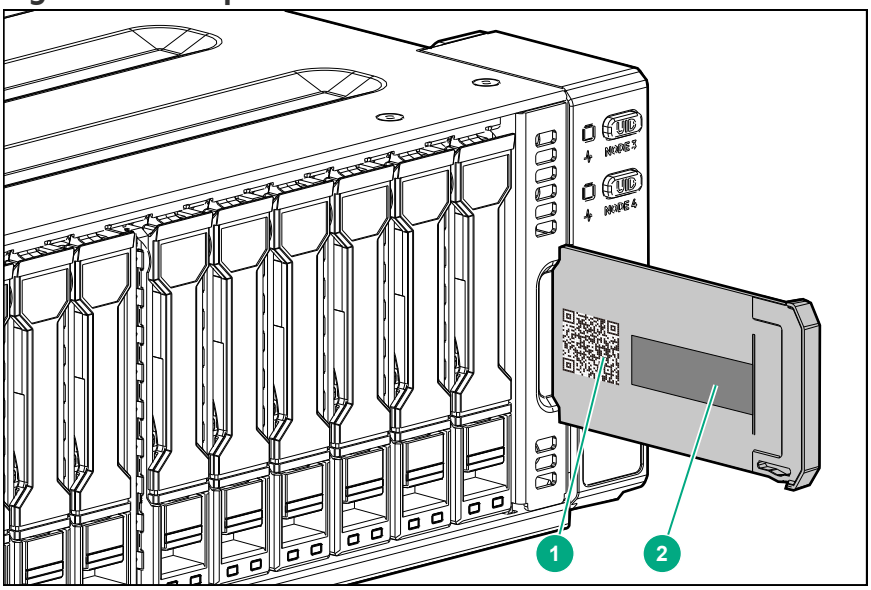

Item	Description
1	Default iLO account information

Item	Description
2	QR code label
3	Server serial number and the customer asset tag label

Use a mobile device to scan the QR code label to display the server mobile product page (**https://www.hpe.com/qref/xl225ngen10plus**). This page contains links to server setup information, spare part numbers, QuickSpecs, troubleshooting resources, and other useful product links.

Rear panel LEDs and button

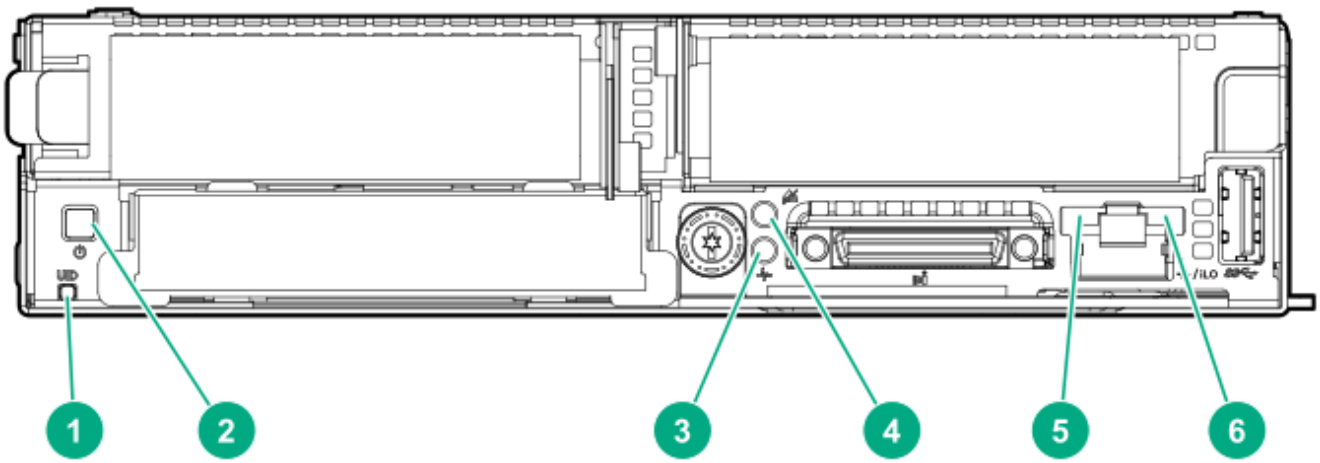

Item	Description	Status	Definition
1	UID LED [1]	Solid blue	Activated
		Flashing	1 flash per sec = Remote management or firmware upgrade in progress
			4 flashes per sec = iLO manual reboot sequence initiated
			8 flashes per sec = iLO manual reboot sequence in progress
		Off	Deactivated

Item	Description	Status	Definition
2	Power On/Standby button and LED [1]	Solid green	System on
		Flashing green	Performing power-on sequence
		Solid amber	System in standby
		Off	No power present [2]
3	Health LED [1]	Solid green	Normal
		Flashing green	iLO is rebooting
		Flashing amber	System degraded
		Flashing red	System critical [3]
4	Do not remove LED [1]	Flashing white	Do not remove the server. Removing the server might terminate the current operation and cause data loss.
		Off	The server can be removed.
5	NIC link LED	Solid green	Network link
		Off	No network link
6	NIC status LED	Flashing green	Network active
		Off	No network activity

[1] When these LEDs flash simultaneously, a power fault has occurred. For more information, see Front panel LED power fault codes.

[2] Facility power is not present, power cord is not attached, no power supplies are installed, power supply failure has occurred, or the node power button cable is disconnected.

[3] If the Health LED indicates a degraded or critical state, review the system IML or use iLO to review the system health status.

Subtopics

Front panel LED power fault codes

Front panel LED power fault codes

The following table provides a list of power fault codes, and the subsystems that are affected. Not all power faults are used by all servers.

Subsystem	LED behavior
System board	1 flash

Subsystem	LED behavior
Processor	2 flashes
Memory	3 flashes
Riser board PCIe slots	4 flashes
FlexibleLOM	5 flashes
Storage controller	6 flashes
System board PCIe slots	7 flashes
Power backplane	8 flashes
Storage backplane	9 flashes
Power supply	10 flashes
PCIe expansion cards installed in riser board	11 flashes
Chassis	12 flashes
GPU card	13 flashes

System board components

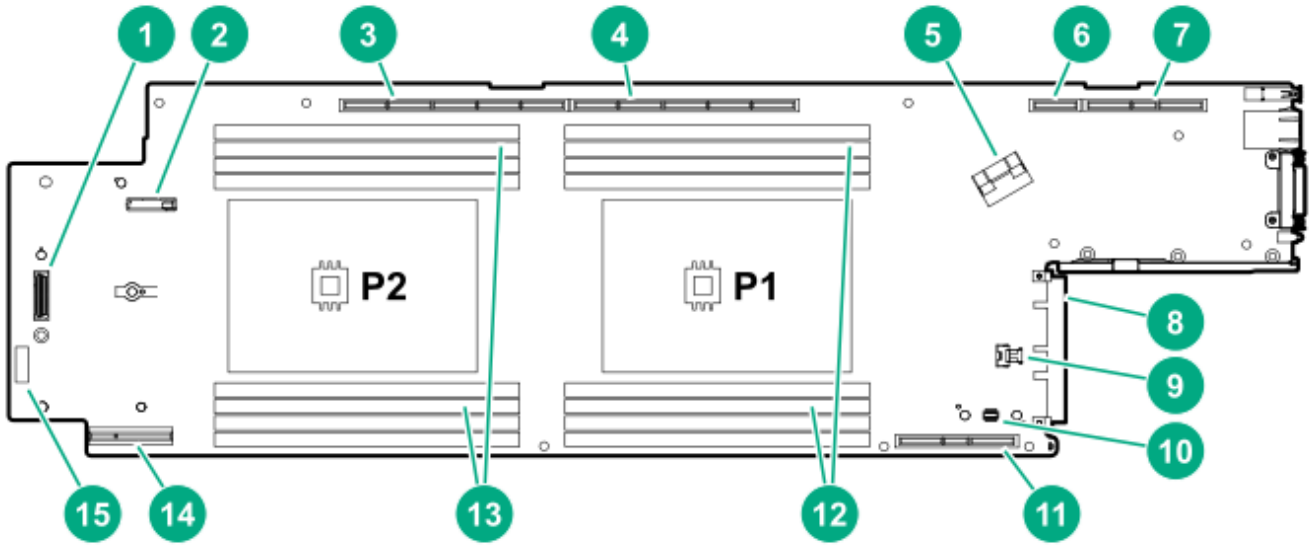

Item	Description
1	Mezzanine card connector
2	System battery

Item	Description
3	Secondary PCIe4 x16 riser connector 5 (P2)
4	Secondary PCIe4 x8 (P1), x16 (P2) riser connector 4
5	SATA 6GB/s port
6	Secondary riser connector 3
7	Secondary PCIe4 x16 riser connector 2 (P1)
8	OCP NIC 3.0 slot (P1)
9	Node power button cable connector
10	TPM connector
11	Primary PCIe4 x16 riser connector 1 (P1)
12	DIMM slots for processor 1
13	DIMM slots for processor 2
14	Power riser connector
15	System maintenance switch

Subtopics

DIMM slot locations
DIMM label identification
Processor and socket components
System maintenance switch descriptions

DIMM slot locations

DIMM slots are numbered sequentially (1 through 8) for each processor. The supported AMP modes use the letter assignments for population guidelines.

The arrow in the following image points to the front of the chassis.

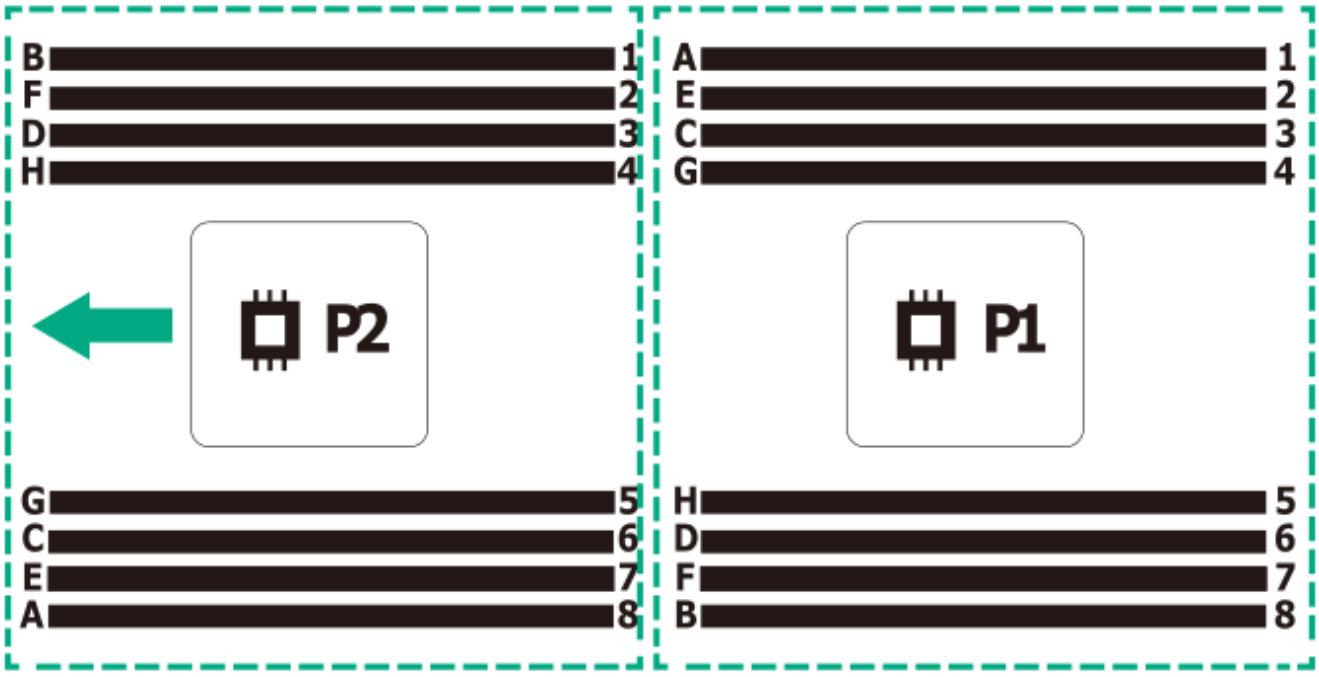

NOTE: The ProLiant XL225n Gen10 Plus Server does not support 2 DIMMs per channel (2 DPC).

DIMM label identification

To determine DIMM characteristics, see the label attached to the DIMM. The information in this section helps you to use the label to locate specific information about the DIMM.

For more information about product features, specifications, options, configurations, and compatibility, see the HPE DDR4 SmartMemory QuickSpecs:

https://www.hpe.com/support/DDR4SmartMemoryQS

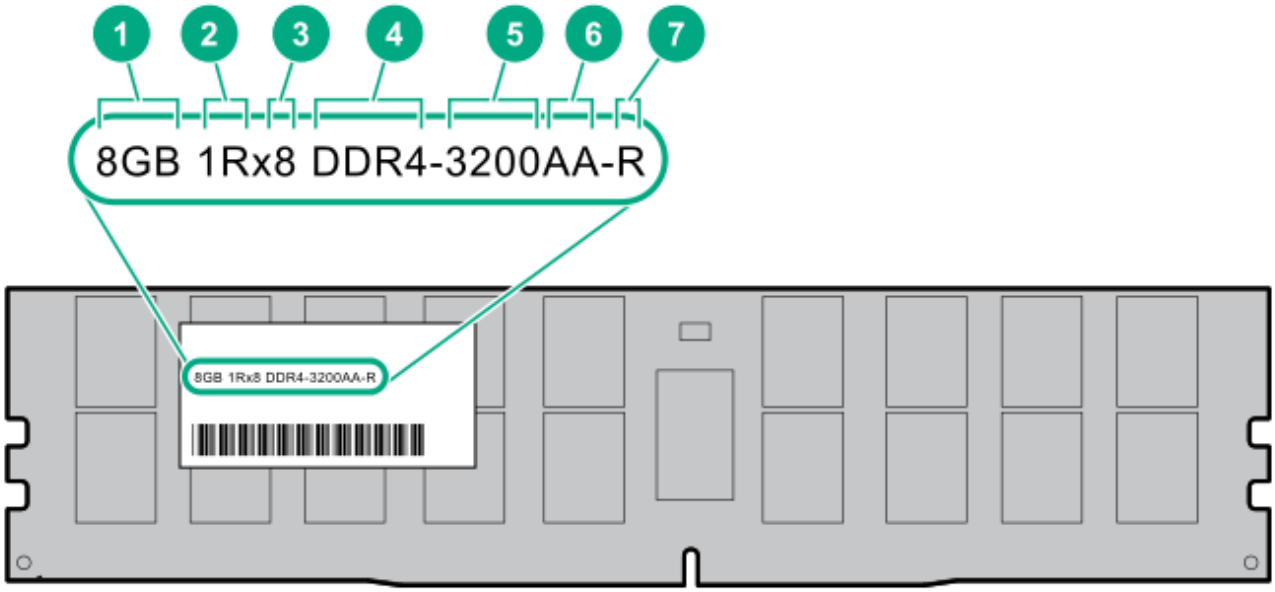

Item	Description	Example
1	Capacity [1]	8 GB 16 GB 32 GB 64 GB 128 GB 256 GB
2	Rank	1R = Single rank 2R = Dual rank 4R = Quad rank 8R = Octal rank
3	Data width on DRAM	x4 = 4-bit x8 = 8-bit
4	Memory generation	PC4 = DDR4
5	Maximum memory speed [1]	3200 MT/s
6	CAS latency	AA = CAS 22-22-22 AA = CAS 26-22-22 (for 3DS LRDIMM)
7	DIMM type	E = Unbuffered ECC (UDIMM)

Item	Description	Example
		R = RDIMM (registered) L = LRDIMM (load reduced)

[1] The maximum memory speed and capacity is a function of the memory type, memory configuration, and processor model.

Processor and socket components

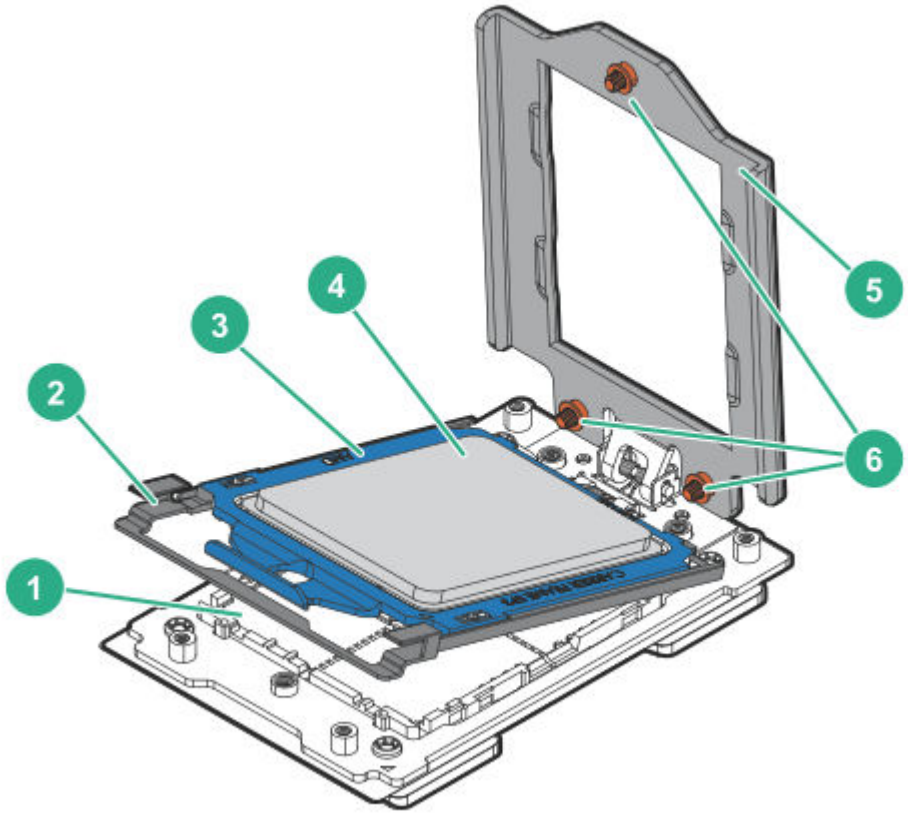

Item	Description
1	Pin field
2	Rail frame
3	Carrier frame
4	Processor

Item	Description
5	Force frame
6	Captive screws (Torx T-20)

System maintenance switch descriptions

Position	Default	Function
S1 [1]	Off	• Off— iLO 5 security is enabled. • On— iLO 5 security is disabled.
S2	Off	Reserved
S3	Off	Reserved
S4	Off	Reserved
S5 [1]	Off	• Off—Power-on password is enabled. • On—Power-on password is disabled.
S6 [1], [2], [3]	Off	• Off—No function • On—Restore default manufacturing settings
S7	Off	Reserved
S8	Off	Reserved
S9	Off	Reserved
S10	Off	Reserved
S11	Off	Reserved
S12	Off	Reserved

[1] To access the redundant ROM, set S1, S5, and S6 to On.
[2] When the system maintenance switch position 6 is set to the On position, the system is prepared to restore all configuration settings to their manufacturing defaults.
[3] When the system maintenance switch position 6 is set to the On position and Secure Boot is enabled, some configurations cannot be restored. For more information, see Configuring the server.

Riser board components

The HPE ProLiant XL225n Gen10 Plus Server supports both primary and secondary riser board options. These riser options support the installation of half-height, half-length (low profile) expansion cards.

Subtopics

Primary riser board components
Secondary riser board components
PCIe4 slot description

Primary riser board components

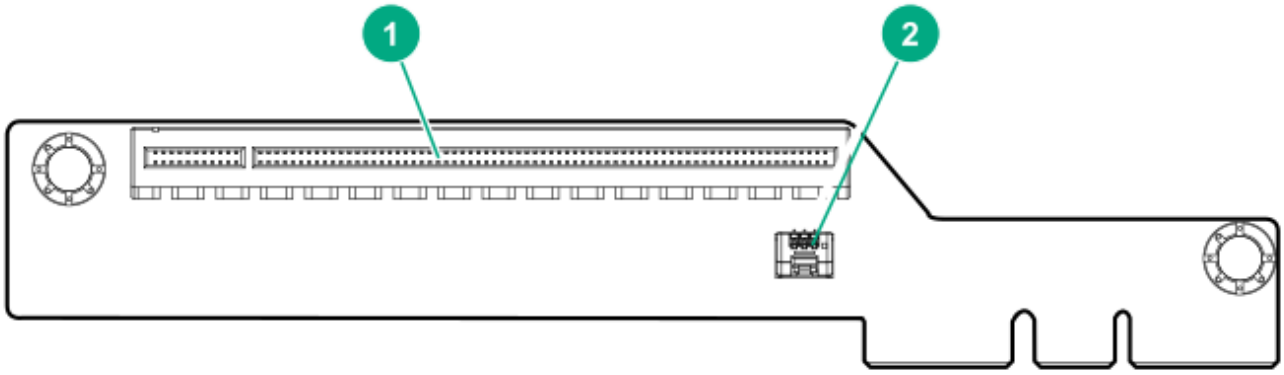

Item	Description
1	Slot 1 PCIe4 x16 (16, 8, 4, 2, 1)
2	Storage controller backup power connector

Secondary riser board components

P1 secondary riser

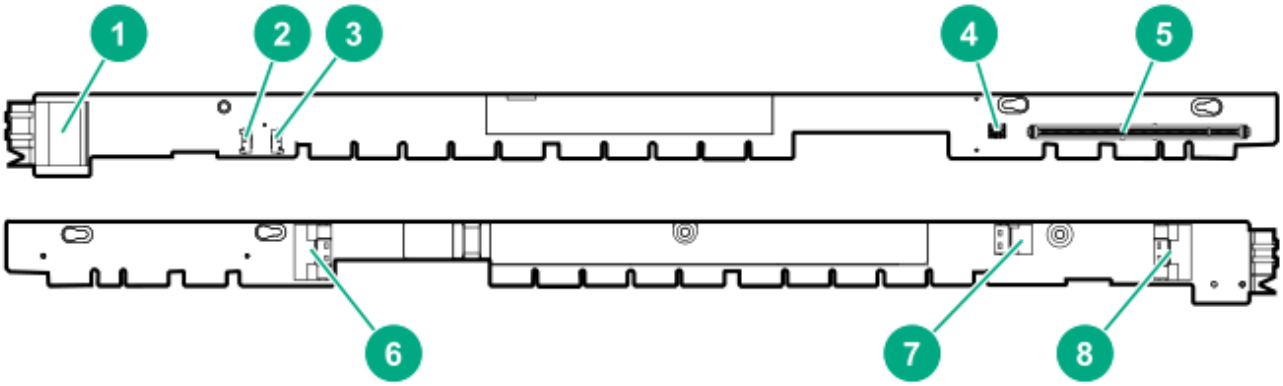

Item	Description
1	Riser interconnect receptacle
2	Pump-cold plate signal connector for processor 2
3	Pump-cold plate signal connector for processor 1
4	Storage controller backup power connector
5	Slot 2 PCIe4 x16 (16, 8, 4, 2, 1)
6	SlimSAS x8 port
7	This port is not used in this server.
8	SlimSAS x8 port

P2 secondary riser

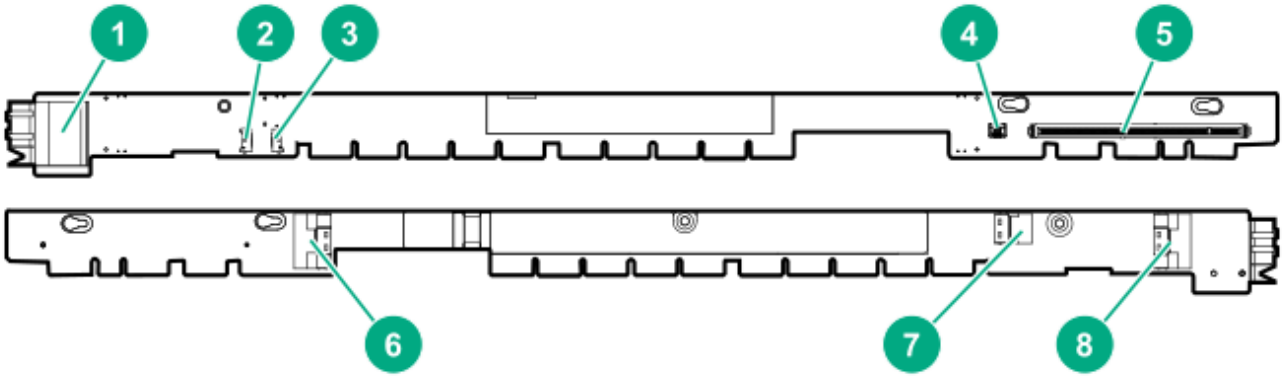

Item	Description
1	Riser interconnect receptacle
2	Pump-cold plate signal connector for processor 2

Item	Description
3	Pump-cold plate signal connector for processor 1
4	Storage controller backup power connector
5	Slot 2 PCIe4 x16 (16, 8, 4, 2, 1)
6	SlimSAS x8 port
7	This port is not used in this server.
8	SlimSAS x8 port

P1 secondary riser for direct attach NVMe SSD

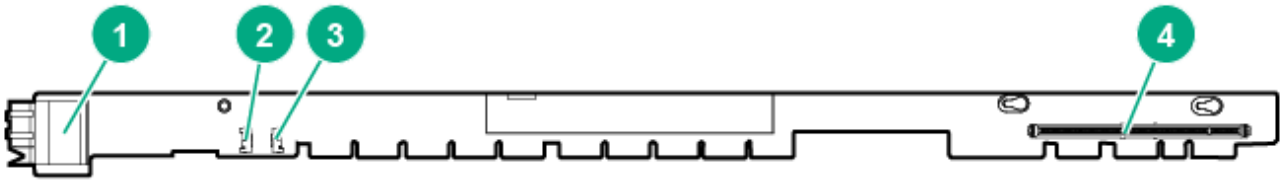

Item	Description
1	Riser interconnect receptacle
2	Pump-cold plate signal connector for processor 2
3	Pump-cold plate signal connector for processor 1
4	Slot 2 PCIe4 x16 (16, 8, 4, 2, 1)

PCIe4 slot description

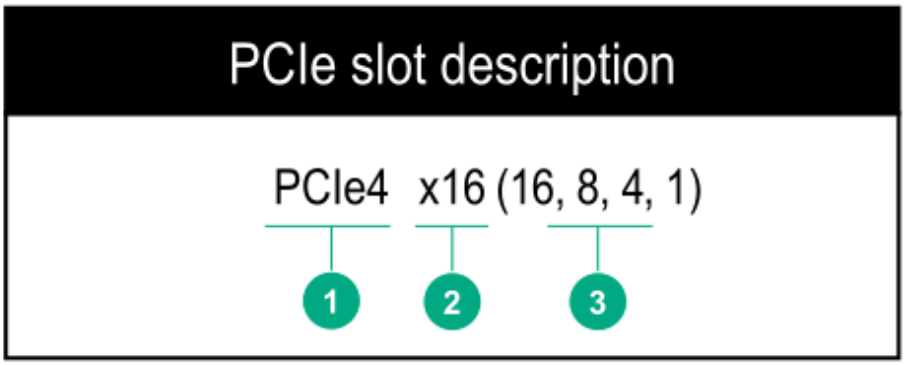

Item	Description	Definition
1	PCI Express version	Each PCIe version corresponds to a specific data transfer rate between the processor and peripheral devices. Gene rally, a version update corresponds to an increase in tran sfer rate. • PCIe 1.x • PCIe 2.x • PCIe 3.x • PCIe 4.x The PCIe technology is under constant development. For the latest information, see the **PCI-SIG website**.
2	Physical connector link width	PCIe devices communicate through a logical connection called an interconnect or link. At the physical level, a link is composed of one or more lanes. The number of lanes i s written with an x prefix with x16 being the largest size in common use. • x1 • x2 • x4 • x8 • x16
3	Negotiable link width	These numbers correspond to the maximum link bandwi dth supported by the slot.

Direct liquid cooling system

The HPE Apollo Direct Liquid Cooling System is a warm water, server-level cooling solution. This system removes heat from high heat components like high wattage processors and DIMMs. The heat removal is done using a safe, environmentally friendly server coolant. Liquid cooling is more efficient than traditional air cooling. Liquid cooling saves energy at the chassis level by reducing the required fan speed. This energy saving leads to a more efficient facility cooling in the data center. This efficiency reduces the overall cooling costs while enabling higher density server deployment.

The Direct Liquid Cooling System has three main components:

- Rack Mount CDU (cooling distribution unit)—The CDU is mounted on the top of the rack and contains the liquid-liquid heat exchanger and coolant reservoir.
- DLC manifold—The DLC manifold is mounted vertically on the hot-aisle side of the rack. The DLC manifold serves as the pathway for the server coolant between the CDU and the server cooling loop.
- Cooling loop—The cooling loop is a server-level pump and cold plate assembly that removes heat from the server components.

The Direct Liquid Cooling System comes ready to plug and play into the data center. There is no need for a secondary plumbing to be installed onsite.

For more information on the Direct Liquid Cooling System setup and operation, see the following guides:

- HPE Apollo Direct Liquid Cooling System Site Preparation Guide

  https://www.hpe.com/support/apollo-dlc-site-gde

- HPE Apollo Rack Mount Coolant Distribution Unit User and Maintenance Guide

  https://www.hpe.com/support/apollo-cdu-umg

- HPE Apollo Rack Mount Coolant Distribution Unit (CDU) Monitoring Software Guide

  https://www.hpe.com/support/apollo-cdu-sw-ug

Subtopics

Server-to-DLC manifold interconnect tube set
Processor cooling loop components
DIMM-processor cooling loop components

Server-to-DLC manifold interconnect tube set

The DLC manifold is connected to the server cooling loop through pairs of interconnect tubes. The tube set is prefilled with server coolant and sealed by drip-free quick connectors. The quick connector has an easy press-and-twist-to-connect coupling with integrated locking mechanism.

The tube set and the cooling loop quick connectors are color coded. They correspond to the color-coded vertical rows of connectors on the DLC manifold.

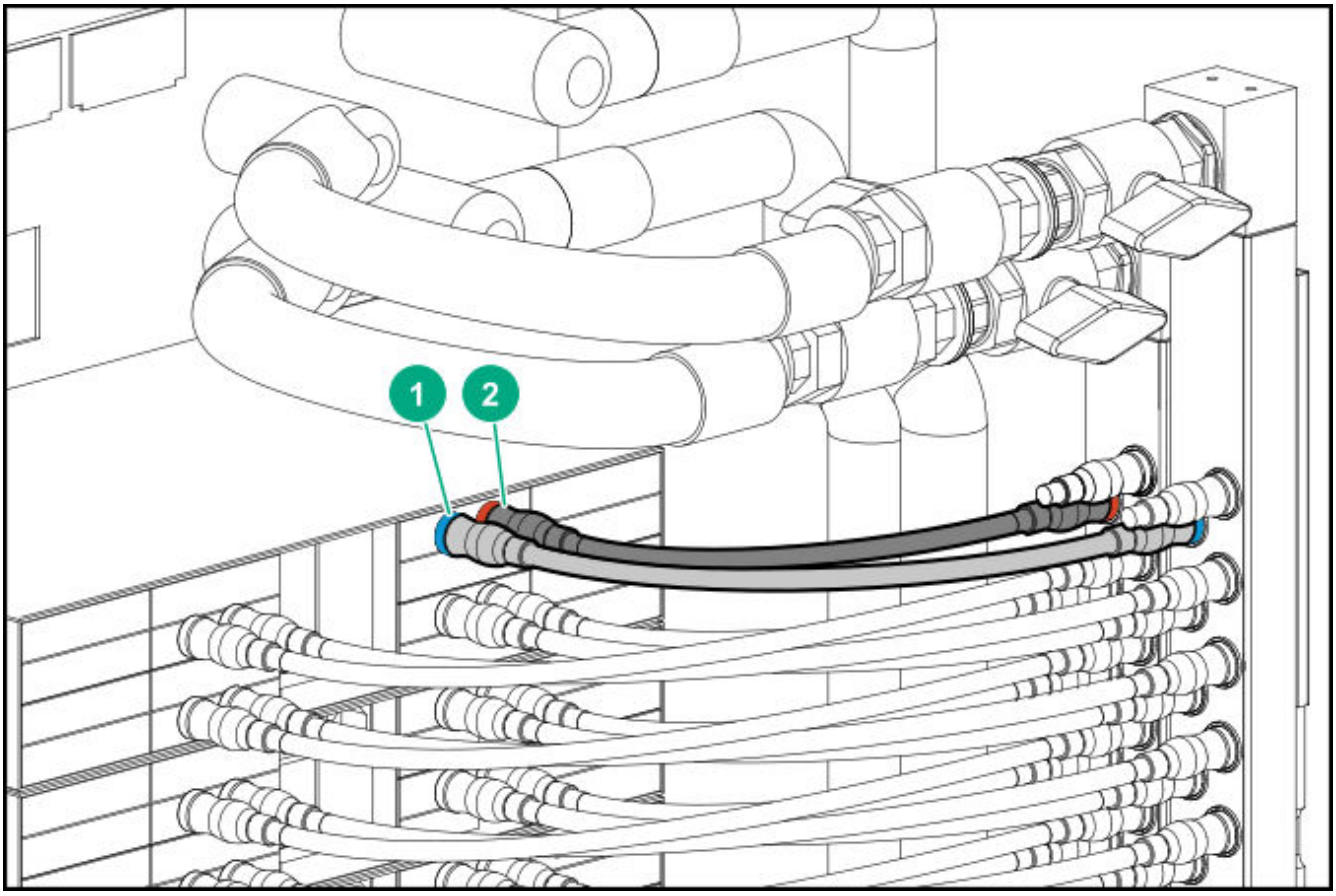

Item	Component	Description
1	Supply tube connector (blue)	Delivers cooled liquid to the server.
2	Return tube connector (red)	Returns heated liquid from the server to the heat exchanger in the CDU for heat rejection into the facility liquid.

Processor cooling loop components

IMPORTANT:

The cooling loop is prefilled with server coolant and sealed by drip-free quick connectors. In the unlikely event of a spill or leak of server coolant from the cooling loop, follow the recommended procedure listed in Appendix II: Spill response of the HPE Apollo Rack Mount Coolant Distribution Unit User and Maintenance Guide (**https://www.hpe.com/support/apollo-cdu-umg**).

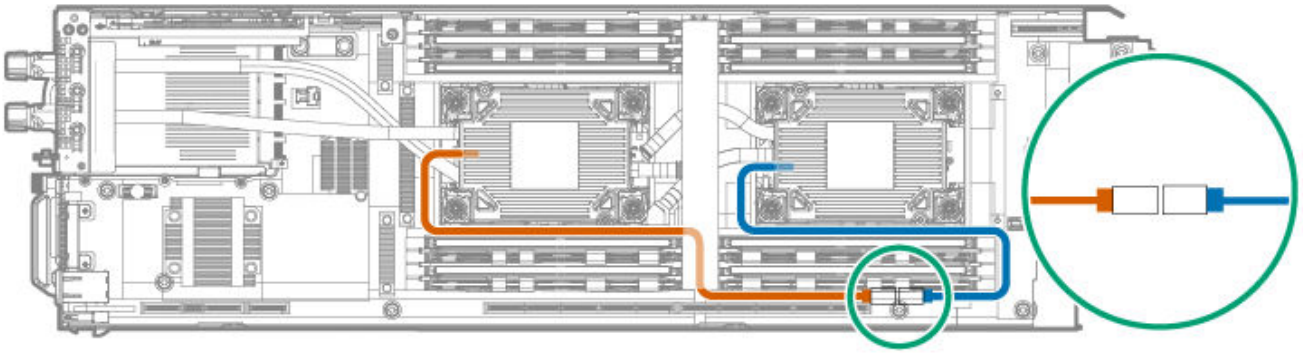

Item	Description
1	Supply loop quick connector (blue)
2	Return loop quick connector (red)
3	Supply loop
4	Return loop
5	Pump-cold plate for processor 1
6	Pump-cold plate for processor 2
7	Pump-cold plate signal cables [1]

[1] If a pump failure occurs, the event is recorded in the iLO IML and Active Health System Log. For more information on accessing this record, see the iLO user guide on the HPE website (**https://www.hpe.com/support/ilo-docs**).

DIMM-processor cooling loop components

IMPORTANT:

The cooling loop is prefilled with server coolant and sealed by drip-free quick connectors. In the unlikely event of a spill or leak of server coolant from the cooling loop, follow the recommended procedure listed in Appendix II: Spill response of the HPE Apollo Rack Mount Coolant Distribution Unit User and Maintenance Guide (**https://www.hpe.com/support/apollo-cdu-umg**).

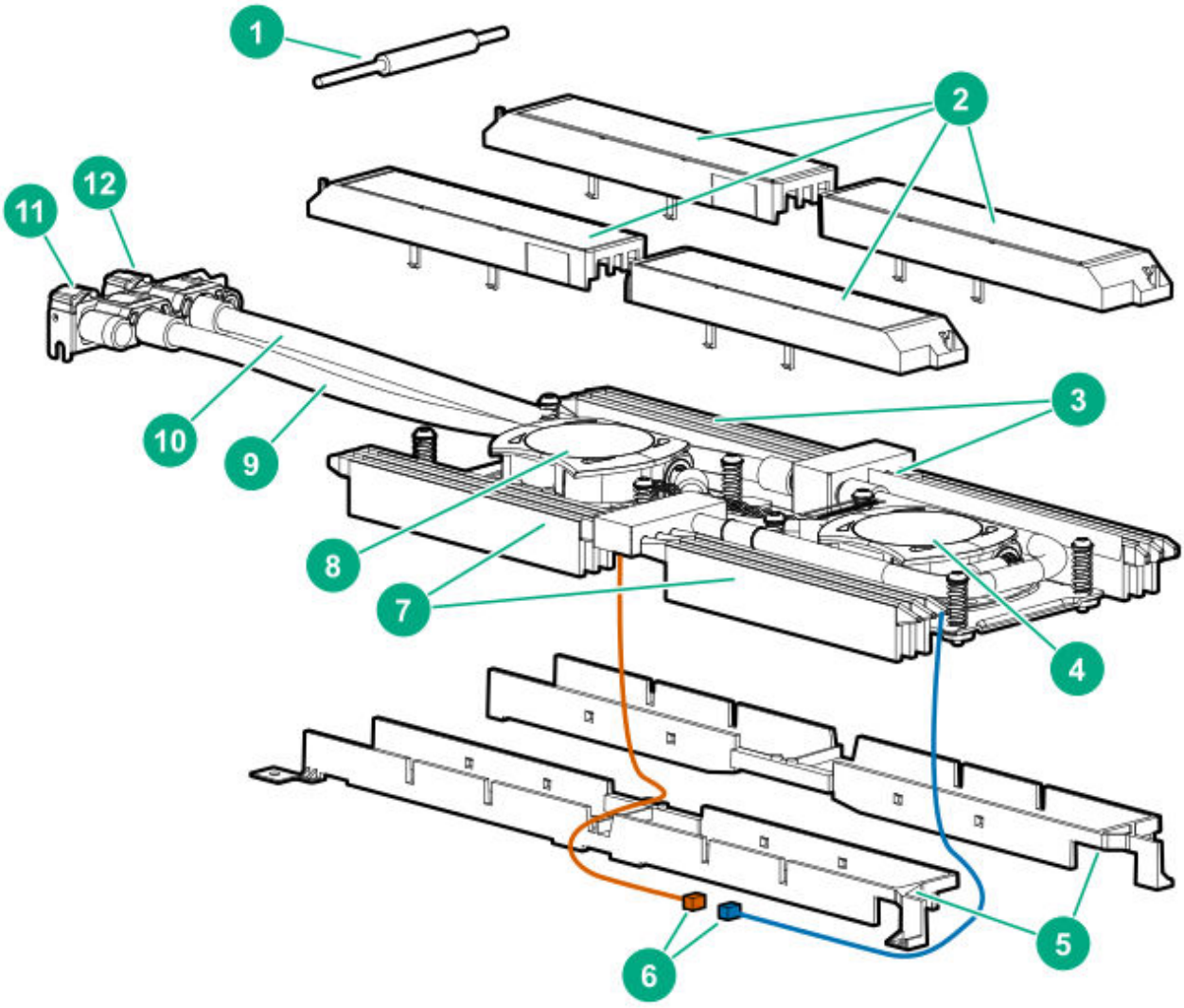

Item	Description
1	DIMM release tool
2	DIMM covers
3	DIMM cold plates for the DIMM slots 5-8
4	Pump-cold plate for processor 2
5	DIMM bezels
6	Pump-cold plate signal cables [1]
7	DIMM cold plates for the DIMM slots 1-4
8	Pump-cold plate for processor 1
9	Return loop
10	Supply loop
11	Return loop quick connector (red)

Item	Description
12	Supply loop quick connector (blue)

[1] If a pump failure occurs, the event is recorded in the iLO IML and Active Health System Log. For more information on accessing this record, see the iLO user guide on the HPE website (**https://www.hpe.com/support/ilo-docs**).

Operations

This chapter describes the hardware operations carried out prior to and after installing or removing a hardware component, or performing a server maintenance or troubleshooting procedure. Before performing these hardware operations, review the:

- Server warnings and cautions

Subtopics

Power up the server
Power down the server
Power capping
Remove the server blank
Disconnect the tube set
Remove the server
Remove the node cover
Remove the air baffle
Remove the primary riser
Remove the secondary riser
Install the secondary riser
Install the primary riser
Install the air baffle
Install the node cover
Install the server
Connect the tube set

Power up the server

About this task

The Apollo n2000 Gen10 Plus series chassis firmware initiates an automatic power-up sequence when the servers are installed. If the default setting is changed, use one of the following methods to power up each server:

- Use a virtual power button selection through iLO 5.
- Press and release the Power On/Standby button.

When the server goes from standby mode to full power mode, the server power LED changes from amber to green.

Power down the server

Before powering down the server for any upgrade or maintenance procedures, perform a backup of critical server data and programs.

> **IMPORTANT:**
> When the server is in standby mode, auxiliary power is still being provided to the system.

To power down the server, use one of the following methods:

- Press and release the Power On/Standby button.
  This method activates a controlled shutdown of applications and the OS before the server enters standby mode. It can also activate a shutdown behavior governed by an OS configuration or policy.
- Press and hold the Power On/Standby button for more than 4 seconds to force the server to enter standby mode.
  This method forces the server to enter standby mode without properly exiting applications and the OS. If an application stops responding, you can use this method to force a shutdown.
- Use a virtual power button selection through iLO 5.
  This method initiates a controlled remote shutdown of applications and the OS before the server enters standby mode.

Before proceeding, verify that the server is in standby mode by observing that the system power LED is amber.

Power capping

Server power capping is useful when you want to hold the actual used system power to a specific amount. This amount might be lower than what the system configuration might maximally use. The power capping feature in this server operates at the server enclosure (chassis) level.

To configure power capping, use one of the following tools:

HPE Apollo Platform Manager (HPE APM)

HPE Apollo Platform Manager is a rack-level device that can control power caps for all enclosures installed in a rack. Power capping functionality is configured using the APM GUI and the Redfish API-conformant APM RESTful API.

For more information, see the following:

- Power capping using HPE Apollo Platform Manager
- HPE Apollo Platform Manager User Guide (**https://www.hpe.com/support/APM_UG_en**)

HPE iLO

HPE iLO is a remote server management processor embedded on the system boards of supported HPE servers and compute modules. HPE iLO enables the monitoring and controlling of servers from remote locations. Use the HPE iLO web interface to configure power capping on supported servers.

For more information, see the following:

- Power capping using the HPE iLO web interface
- HPE iLO 5 User Guide (**https://www.hpe.com/support/ilo-docs**)

iLO RESTful API

iLO includes the iLO RESTful API, which is Redfish API conformant. The iLO RESTful API is a programming interface that is used to perform server configuration, inventory, and monitoring tasks. These tasks are done by sending basic HTTPS operations to the iLO web server. Use the iLO RESTful API to configure power capping on supported servers.

For more information, see the iLO RESTful API documentation (**https://servermanagementportal.ext.hpe.com/**).

HPE Performance Cluster Manager

HPE Performance Cluster Manager provides complete provisioning, management, and monitoring for Linux-based high performance computing (HPC) clusters. Power capping from GPU to cluster level is available through the HPE Cluster Manager power management software.

For more information, see the following:

- Power capping with HPE Performance Cluster Manager

- HPE Performance Cluster Manager Power Management Guide (**https://www.hpe.com/support/hpcm-power-009**)

Table 1. Power capping features by tool

Feature	iLO web interface [1]	iLO RESTful API [1]	HPE Apollo Platform Manager	HPE Performance Cluster Manager
Server/node-level power capping	X	X	—	X
Chassis-level power capping	X	X	X	X
Rack-level power capping	—	—	X	X
Cluster/system-level power capping	—	—	—	X
Server-level GPU power capping [2]	—	—	—	X
Group GPU power capping [2]	—	—	—	X

[1] An iLO Advanced License is required to use User Configurable Mode.
[2] Support for NVIDIA GPUs only

Subtopics

Power capping using HPE Apollo Platform Manager
Power capping using the HPE iLO web interface
Power capping with HPE Performance Cluster Manager

Power capping using HPE Apollo Platform Manager

A global power cap can be applied to all enclosures with one HPE Apollo Platform Manager command. Different caps can be applied to user-defined groups using flexible zones within the same rack.

All supported enclosures and servers that are connected to the APM can participate in power capping and monitoring. Separate power cap settings can be made for as many or as few of the enclosures as needed, but the power baseline process operates as a global process that interacts with every supported enclosure that

is connected to the APM. For more information on cabling between the enclosure and APM, see the cabling section.

> **NOTE:**
> Hewlett Packard Enterprise recommends configuring the APM such that it controls only one rack.

Power capping is configured using the APM GUI and the Redfish-conformant APM RESTful API. For information on enabling and using the APM GUI or RESTful API, see the HPE Apollo Platform Manager User Guide (**https://www.hpe.com/support/APM_UG_en**).

Power capping using the HPE iLO web interface

The **Power Regulation** page of the HPE iLO web interface allows you to configure power regulation settings for an HPE Apollo chassis and the servers it contains.

Power capping with HPE Performance Cluster Manager

The HPE Performance Cluster Manager provides the capabilities for system-level and job-level management. The cluster manager runs a service on the admin node to interact with the various power control points. The power management software performs the following functions:

- Measures, aggregates, and reports power statistics
- Sets power limits on HPE clusters

A power distribution unit (PDU) reads AC power and energy measurements on cluster rack-level power domains. For the AC power measurement feature to function, the cluster must have one or more of the following PDUs:

- Server Technology Sentry3
- Server Technology Sentry4
- 880459-B21 (Raritan) HPE Mtrd 3P 39.9kVA 60A 48A/277V FIO PDU
- P9R82A HPE G2 Mtrd 3P 17.3kVA/18 C13 N/J PDU

The cluster manager power management capability requires all HPE ProLiant and HPE Apollo systems to be Gen10 or later systems.

Remove the server blank

About this task

CAUTION: To prevent improper cooling and thermal damage, do not operate the system unless all bays are populated with either a component or a blank.

Procedure

1. Press and hold the server blank latch.
2. Slide the server blank out of the bay.

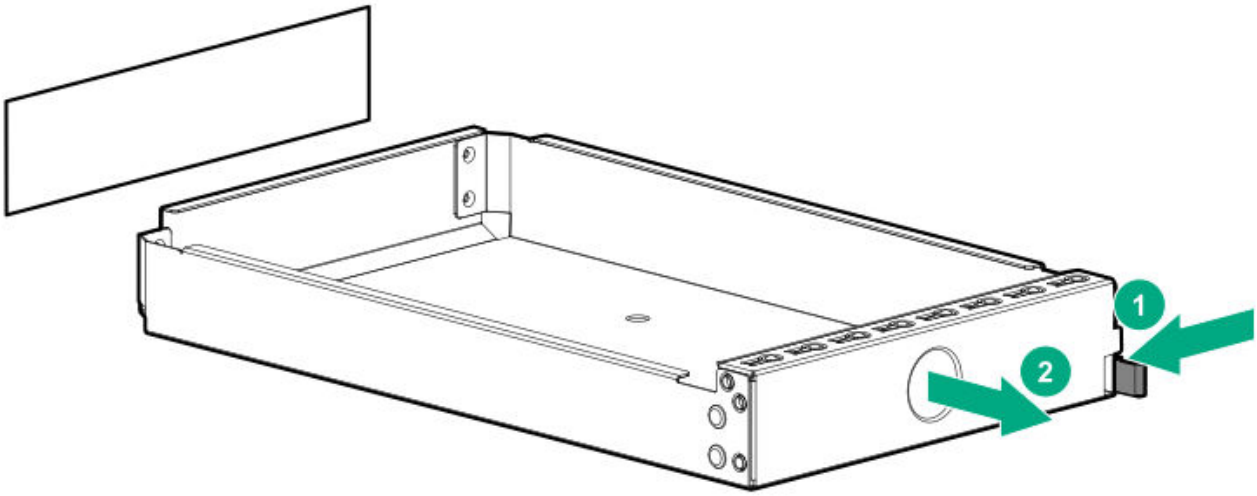

Disconnect the tube set

Procedure

1. Power down the server.
2. Push the female connector (jack) to the male connector (plug) for about 1/8 of an inch.
3. Rotate the female connector counter-clockwise until the tube is pushed off the connector by the springs inside.

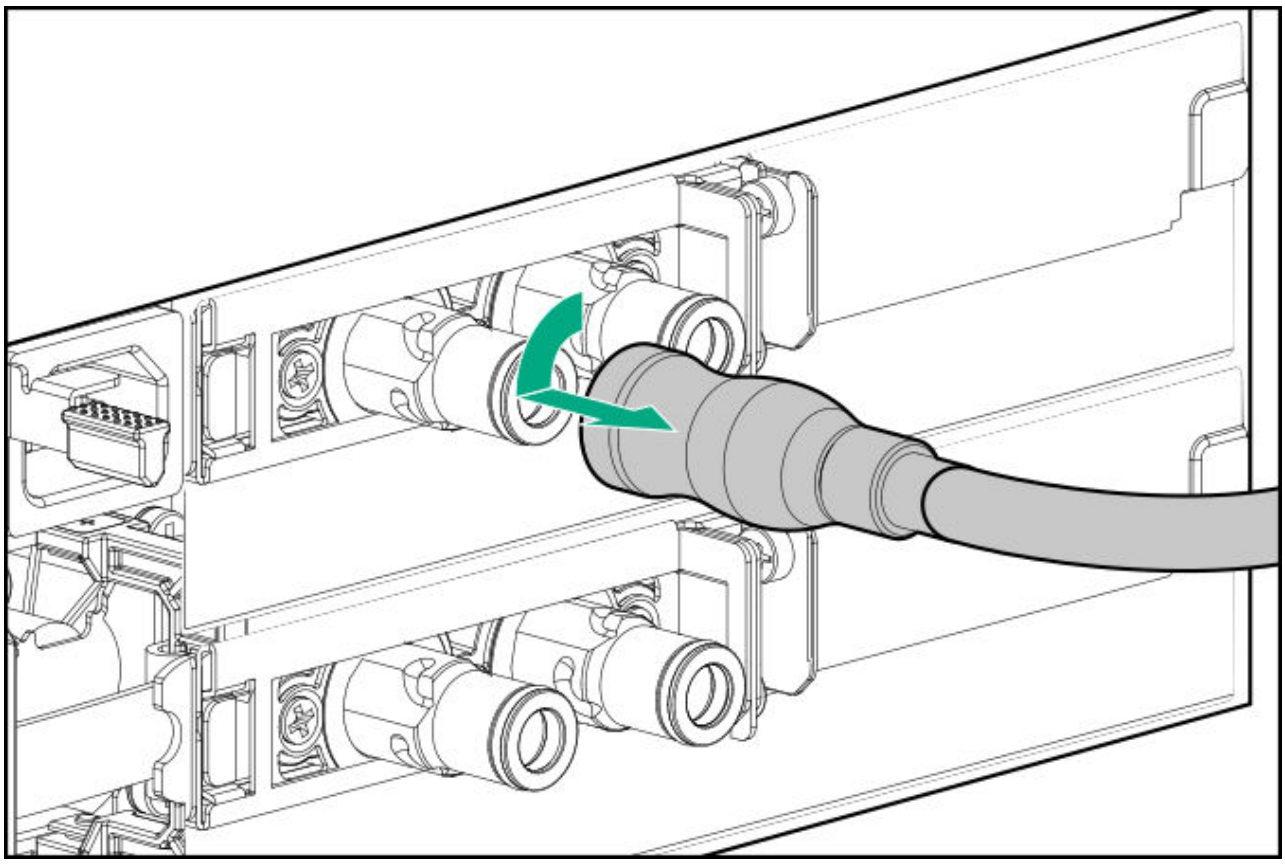

Remove the server

About this task

CAUTION:

To avoid accidentally dropping the server, observe the following:

- Always support the bottom of the server when removing and sliding it into the server bay.
- Do not use the release lever as a handle to carry the server.

Procedure

1. Power down the server.
2. Make sure that the server Do not remove LED is off.

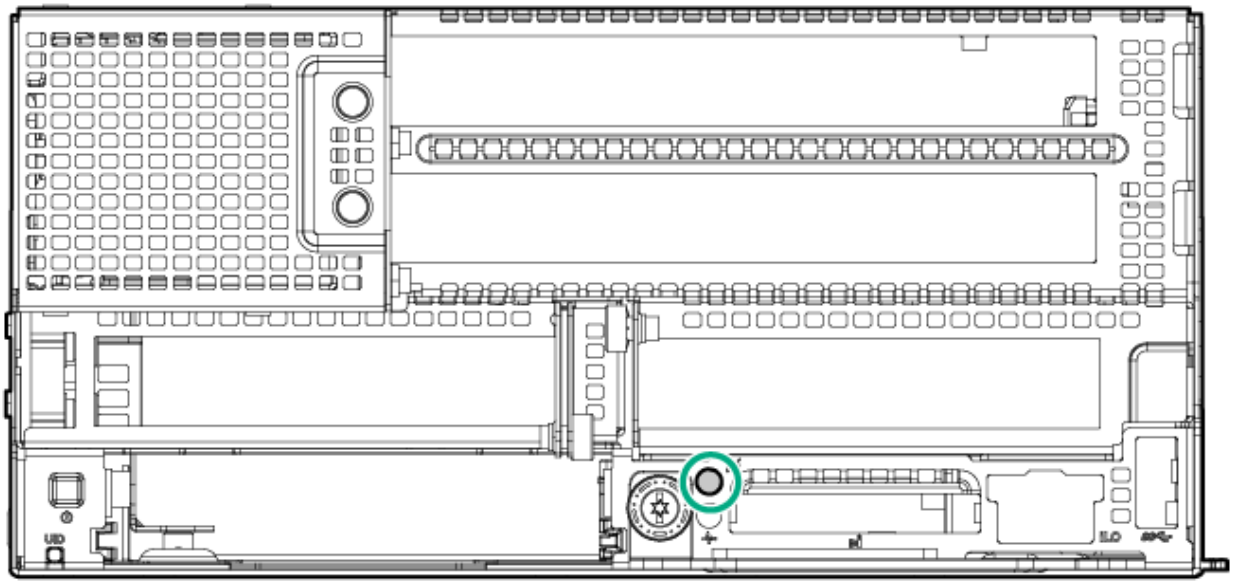

3. Disconnect all peripheral cables from the server.
4. Remove the server:
   a. Loosen the release lever thumbscrew (callout 1).
   b. Use the release lever to pull the server out of the bay (callout 2).

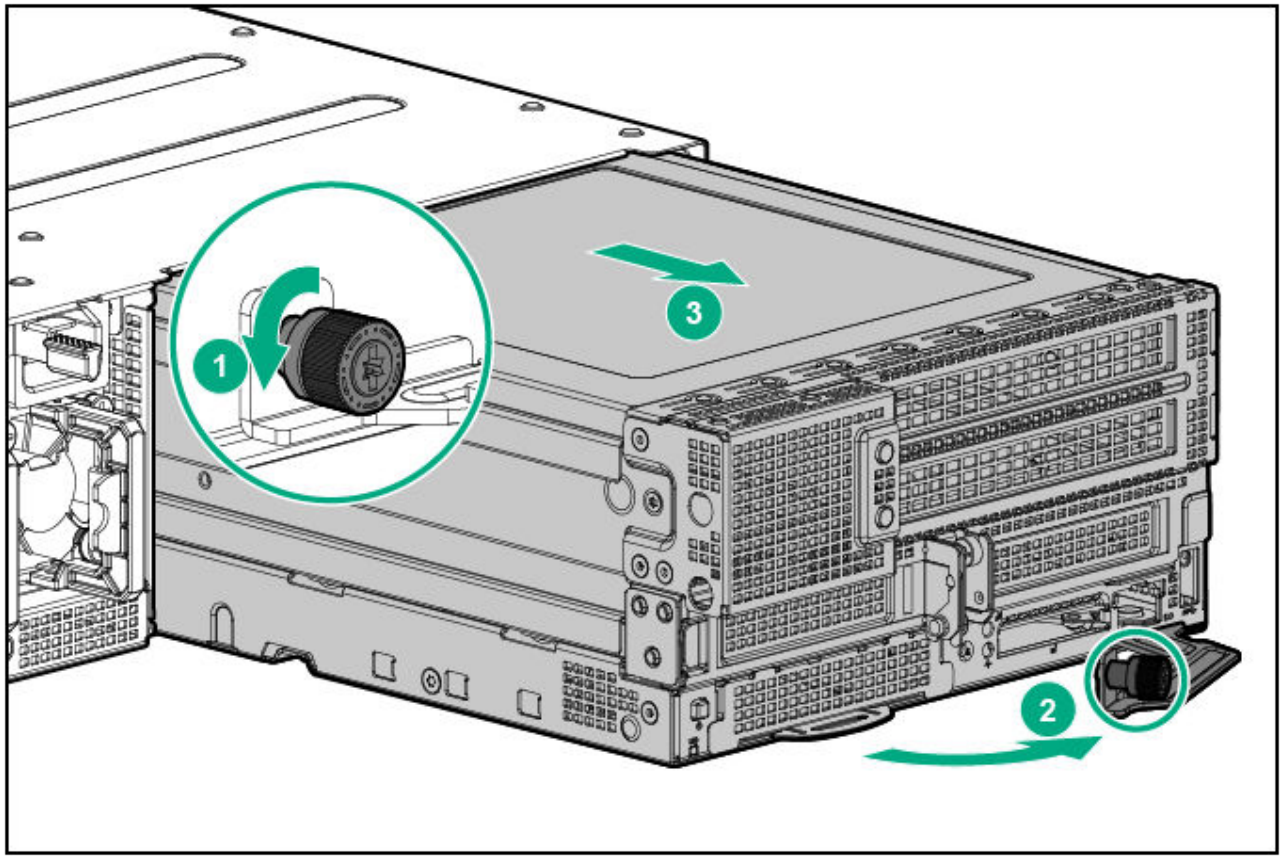

5. Place the server on a flat, level work surface.

Remove the node cover

About this task

WARNING: To reduce the risk of personal injury from hot surfaces, allow the drives and the internal system components to cool before touching them.

CAUTION: To prevent damage to electrical components, take the appropriate anti-static precautions before beginning any installation, removal, or replacement procedure. Improper grounding can cause electrostatic discharge.

CAUTION:

Do not operate the server with the node cover removed. Operating the server in this manner results in improper airflow and improper cooling that can lead to thermal damage.

Procedure

1. Power down the server.
2. If installed, disconnect the tube set.
3. Disconnect all peripheral cables from the server.
4. Remove the server.
5. Place the server on a flat, level work surface.
6. Remove the node cover:
   a. Press and hold the release button (callout 1).
   b. Slide the cover towards the front end of the server, and then lift it up and off the server (callout 2).

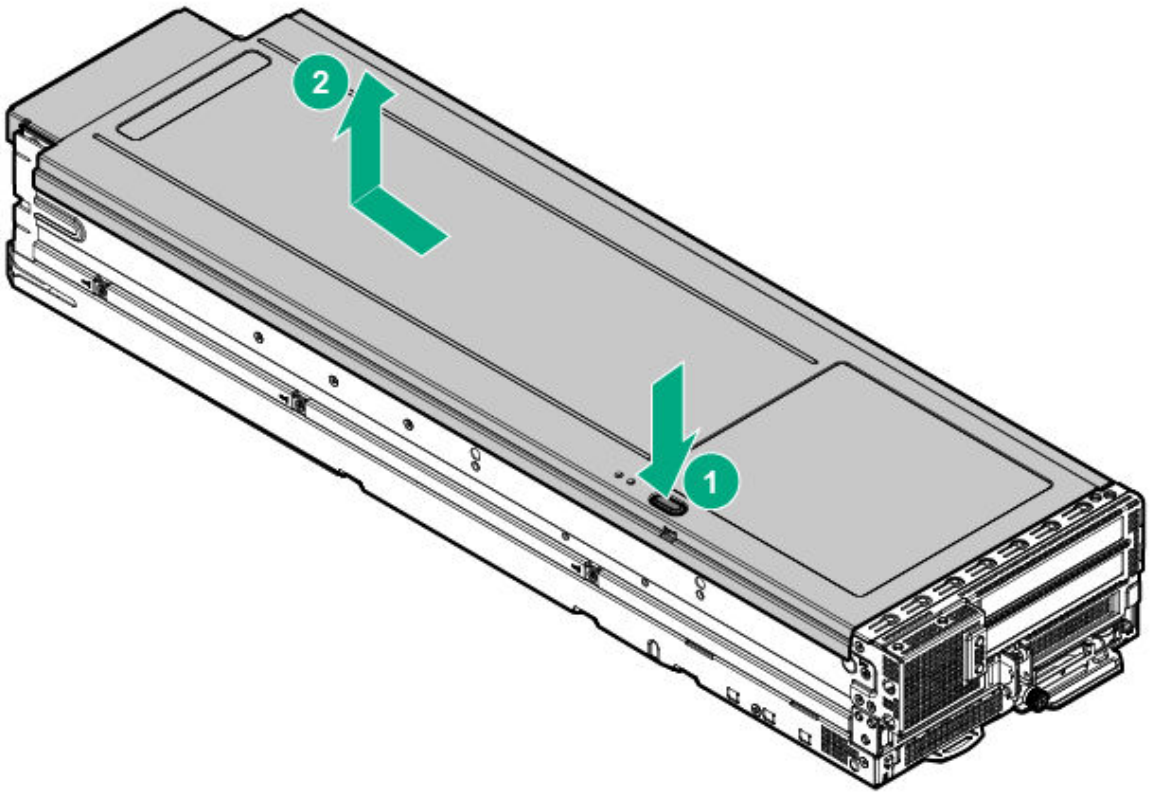

Remove the air baffle

About this task

CAUTION: For proper cooling, do not operate the server without the baffles, expansion slot covers, or blanks installed.

Procedure

1. Power down the server.
2. If installed, disconnect the tube set.
3. Disconnect all peripheral cables from the server.
4. Remove the server.
5. Place the server on a flat, level work surface.
6. Remove the node cover.
7. Remove the air baffle.

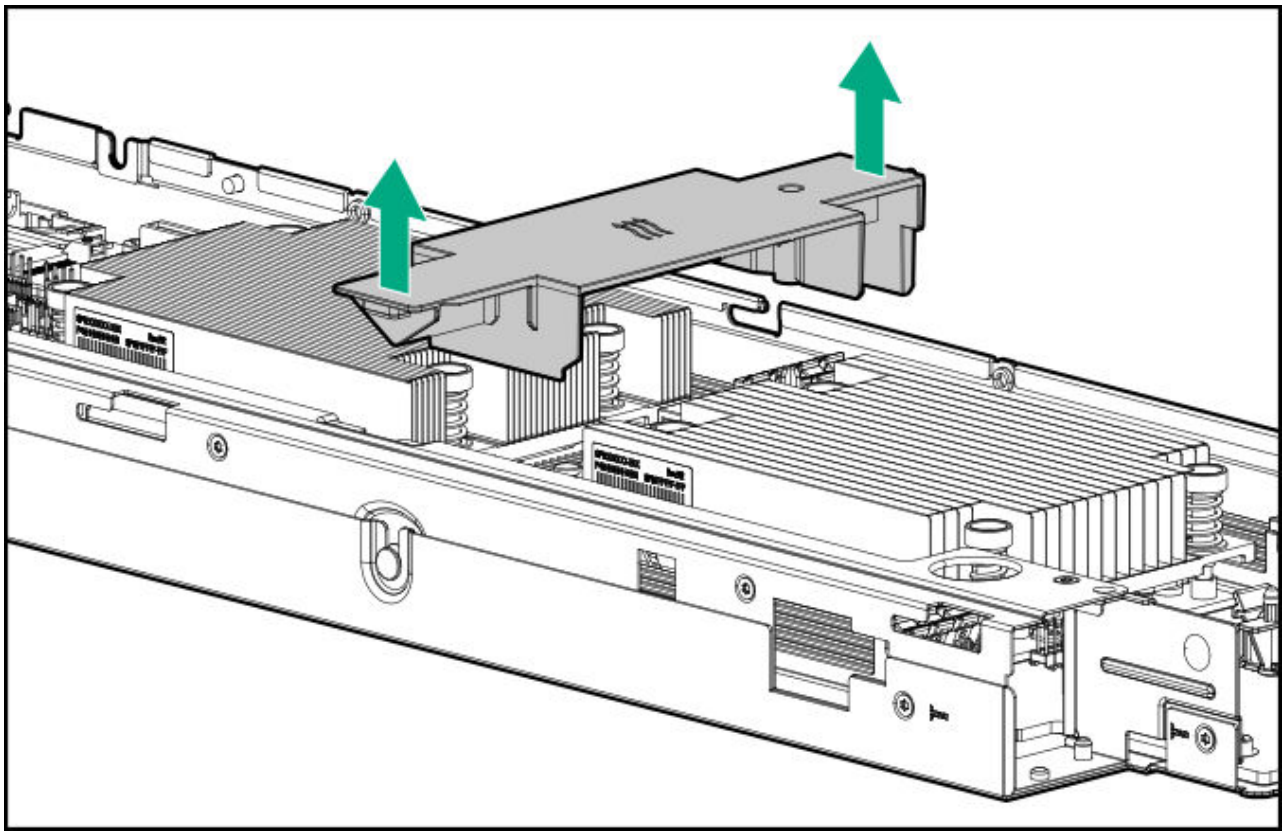

Remove the primary riser

Prerequisites

Before you perform this procedure, make sure that you have the following items available:

- T-10 Torx screwdriver
- T-15 Torx screwdriver

About this task

CAUTION: To prevent improper cooling and thermal damage, do not operate the server unless either riser blank or riser cage is installed.

Procedure

1. Power down the server.
2. If installed, disconnect the tube set.

3. Disconnect all peripheral cables from the server.
4. Remove the server.
5. Place the server on a flat, level work surface.
6. Remove the node cover.
7. If an expansion card with internal cable is installed on the riser, disconnect the cable from the expansion card.
8. Remove the riser screws (callout 1), and then lift the riser off the system board (callout 2).

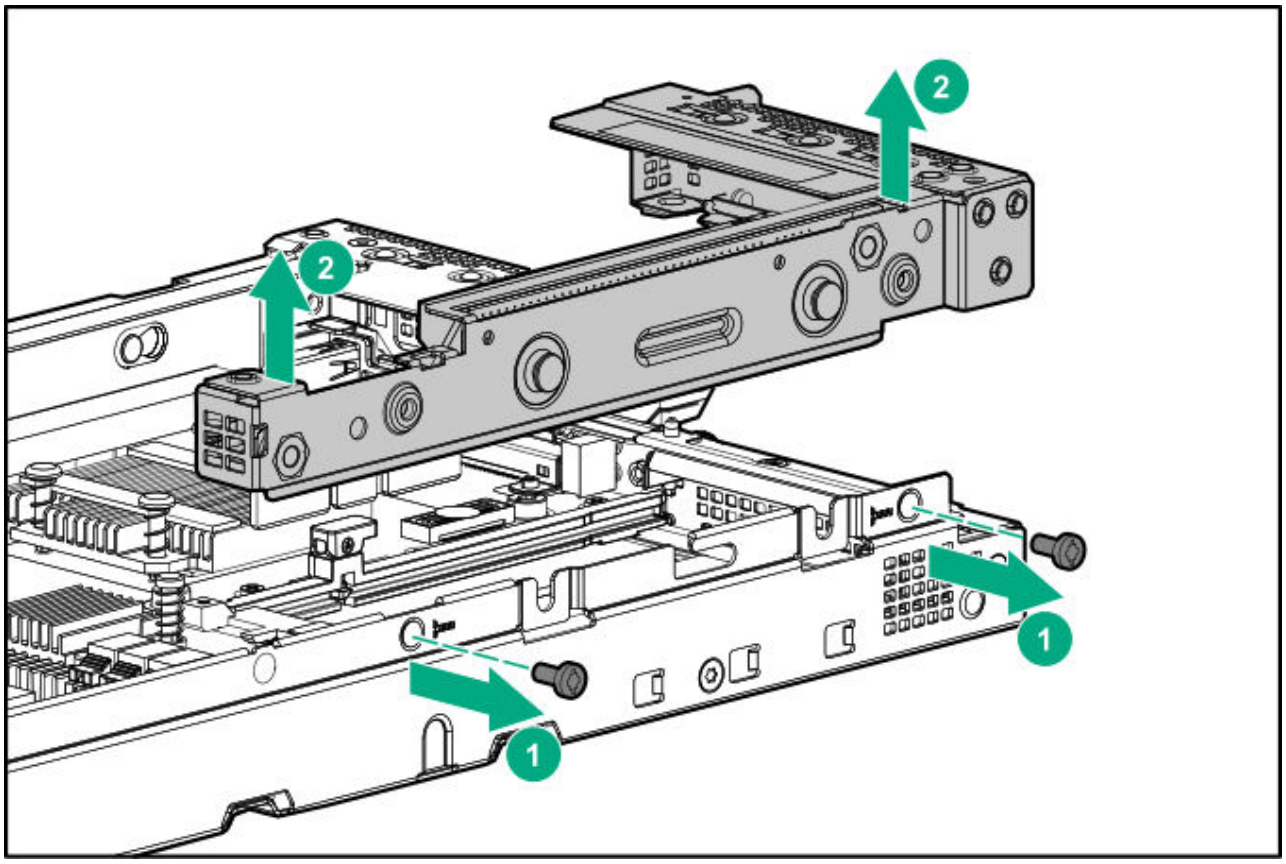

9. If a cooling loop is installed, remove the quick connector bracket from the riser:
   a. Remove the retainer bracket screw (callout 1).
   b. Remove the retainer bracket (callout 2).
   c. Pull out the quick connector bracket (callout 3).

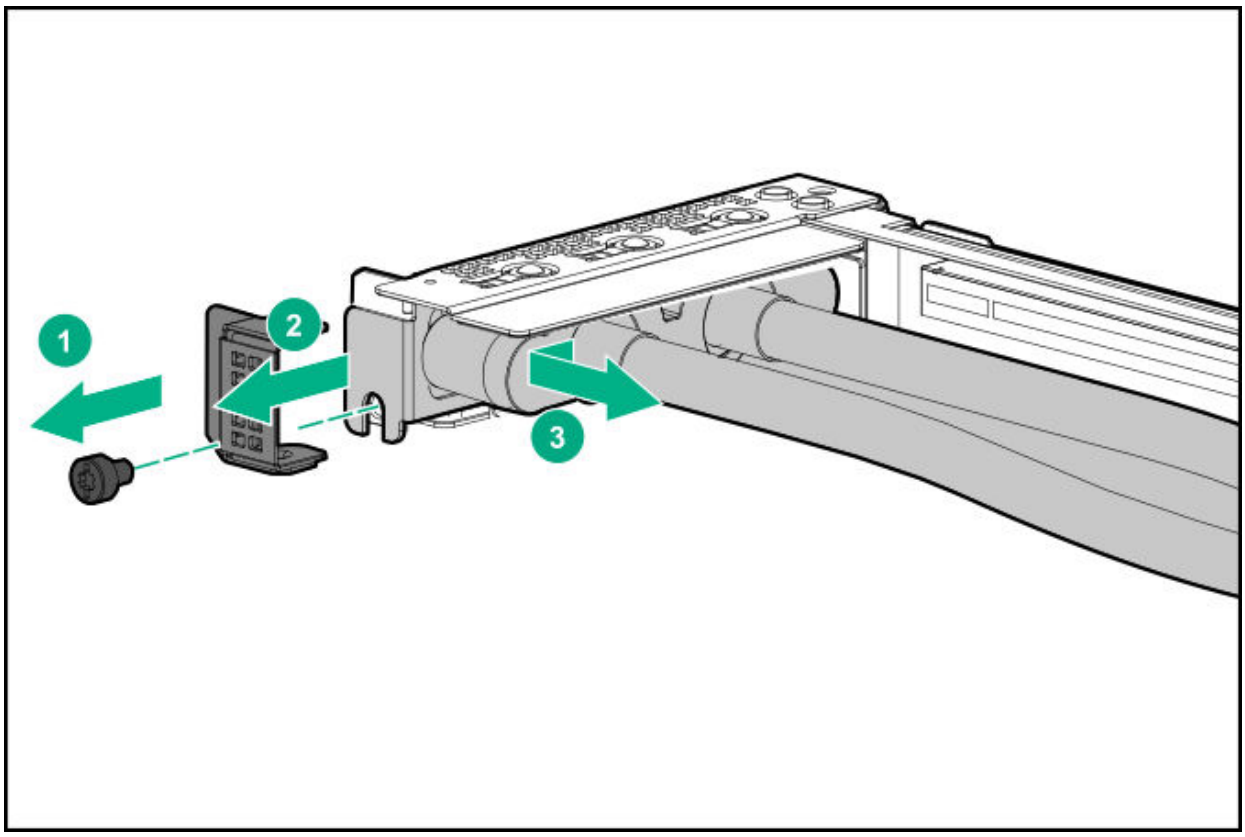

Remove the secondary riser

Prerequisites

Before you perform this procedure, make sure that you have a T-10 Torx screwdriver available.

About this task

CAUTION: To prevent improper cooling and thermal damage, do not operate the server unless either riser blank or the riser cage is installed.

Procedure

1. Power down the server.
2. If installed, disconnect the tube set.
3. Disconnect all peripheral cables from the server.
4. Remove the server.

5. Place the server on a flat, level work surface.
6. Remove the node cover.
7. If installed, remove the air baffle.

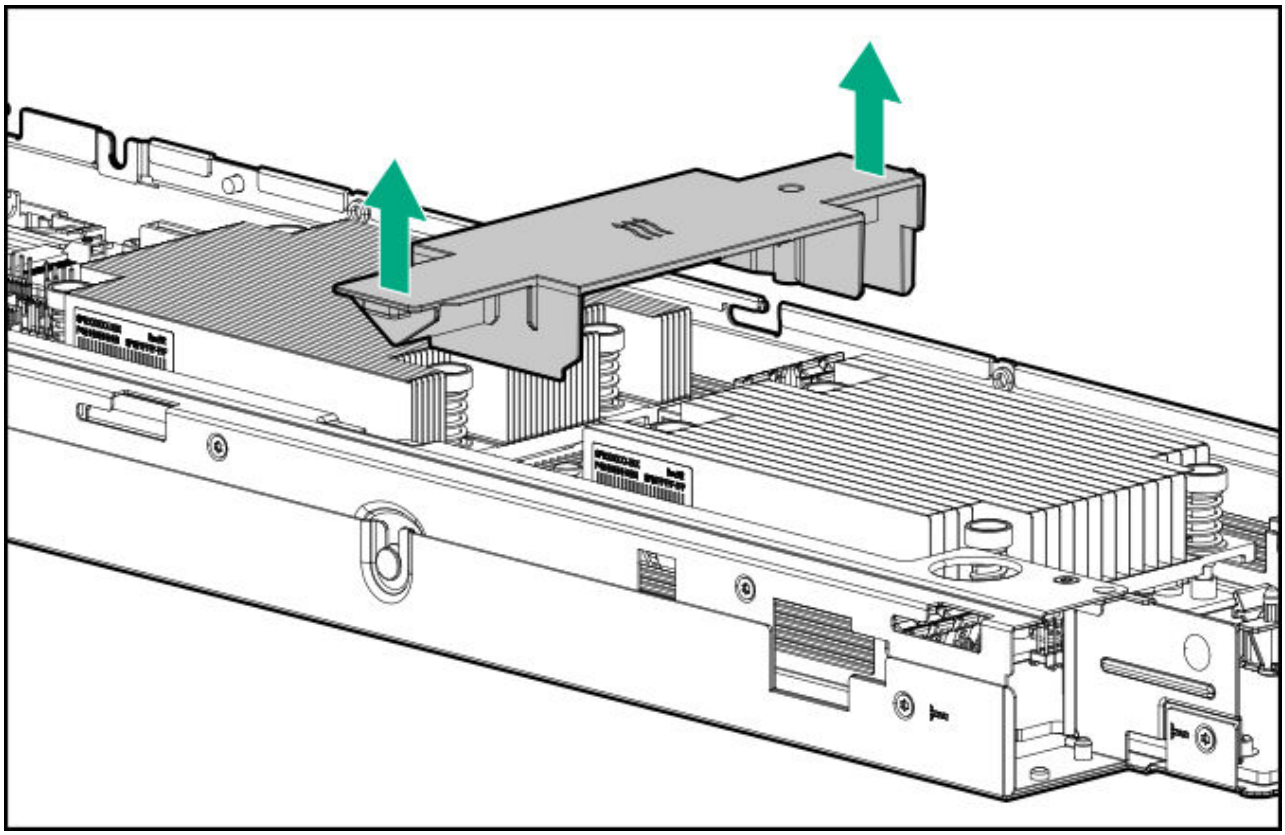

8. Do one of the following:
   - If a cooling loop is installed, disconnect the pump-cold plate signal cables from the riser.

     If necessary, remove the DIMM adjacent to the riser to access the pump-cold plate signal connectors.
   - If the onboard SATA cable is attached to the riser, disconnect it from the system board.
   - If an expansion card with internal cable is installed on the riser, disconnect the cable from the expansion card.
9. Remove the riser screws (callout 1), and then lift the riser off the system board (callout 2).

   There is a hole on the front end of the riser bracket for finger access in pulling up the riser.

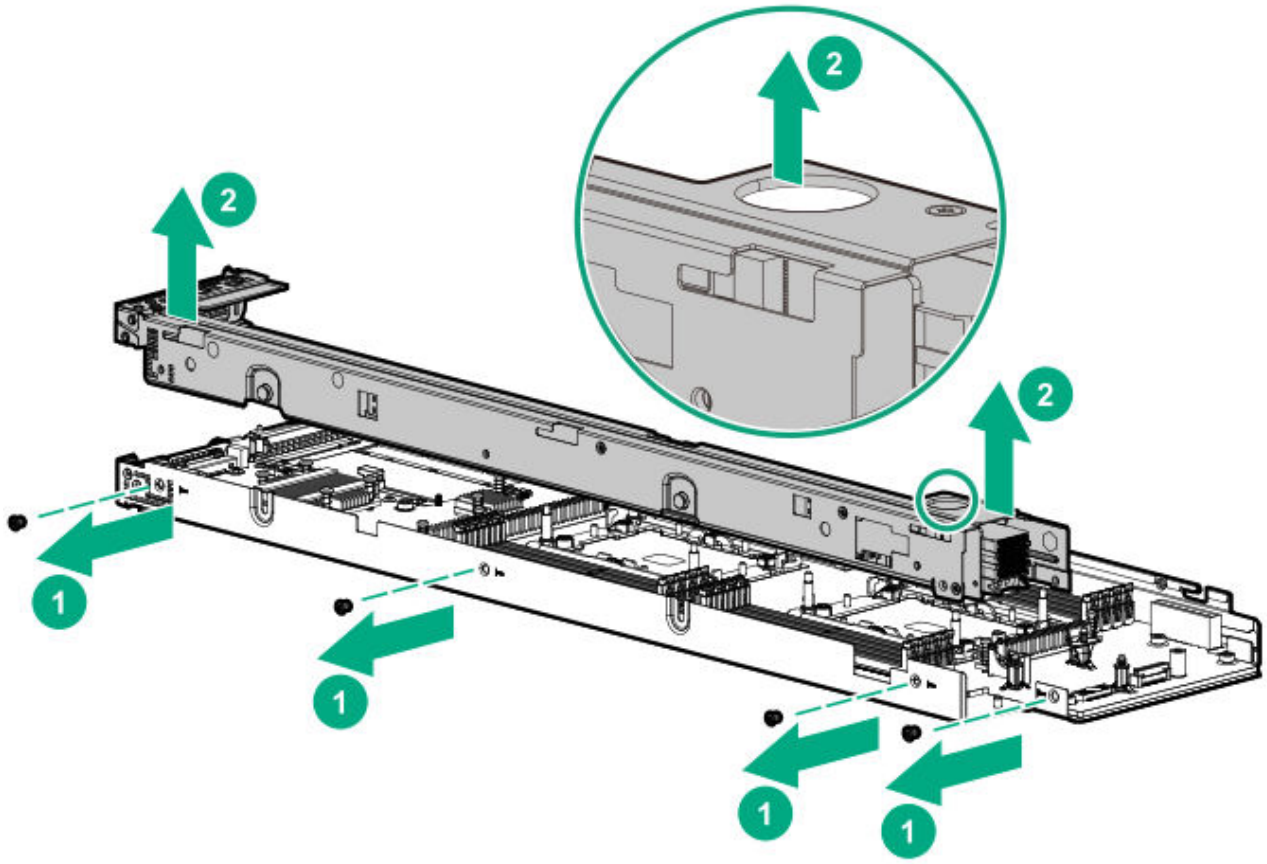

Install the secondary riser

Prerequisites

Before you perform this procedure, make sure that you have a T-10 Torx screwdriver available.

Procedure

1. If the onboard SATA cable or a Smart Array controller cable is attached to the riser, do the following:
   a. Route the cable underneath the riser cutout (callout 1).
   b. To ensure that the cable is not caught underneath the riser during the installation, position the cable away from the riser connector (callout 2).

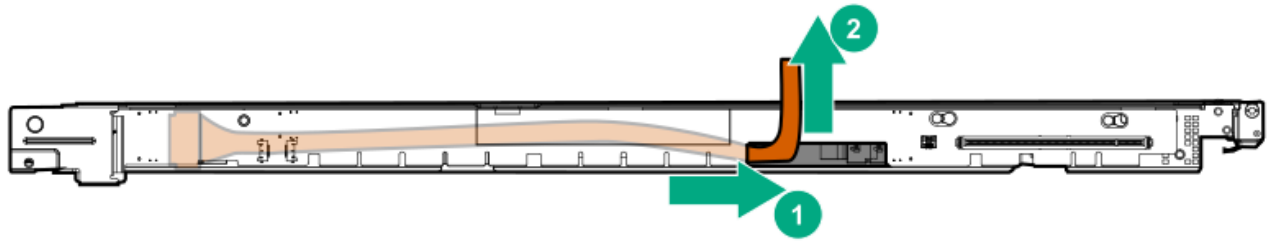

2. Install the secondary riser:

   a. Align the spools on the riser with the notches on the server tray (callout 1).

   b. Carefully press the riser down on its system board connector (callout 2).

      Make sure that the riser board is firmly seated.

   c. Install the riser screws (callout 3).

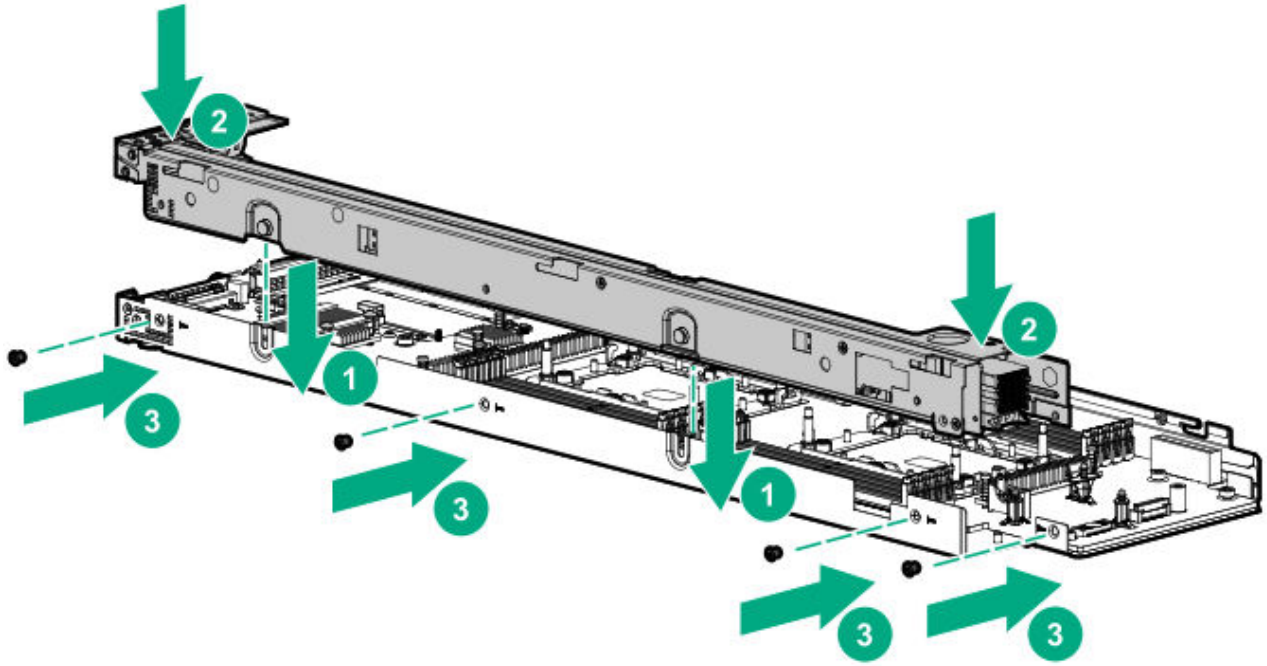

3. Do one or both of the following:

   - If the onboard SATA cable or a Smart Array controller cable is attached to the riser, connect the cable.
   - If a cooling loop is installed, connect the pump-cold plate signal cables to the riser.

     Install any DIMM that might have been removed to access the pump-cold plate signal connectors.

Install the primary riser

Prerequisites

Before you perform this procedure, make sure that you have a T-10 Torx screwdriver available.

Procedure

1. Install the primary riser:
   a. Align the spools on the riser with the notches on the server tray (callout 1).
   b. Carefully press the riser down on its system board connector (callout 2).

      Make sure that the riser board is firmly seated.
   c. Install the riser screws (callout 3).

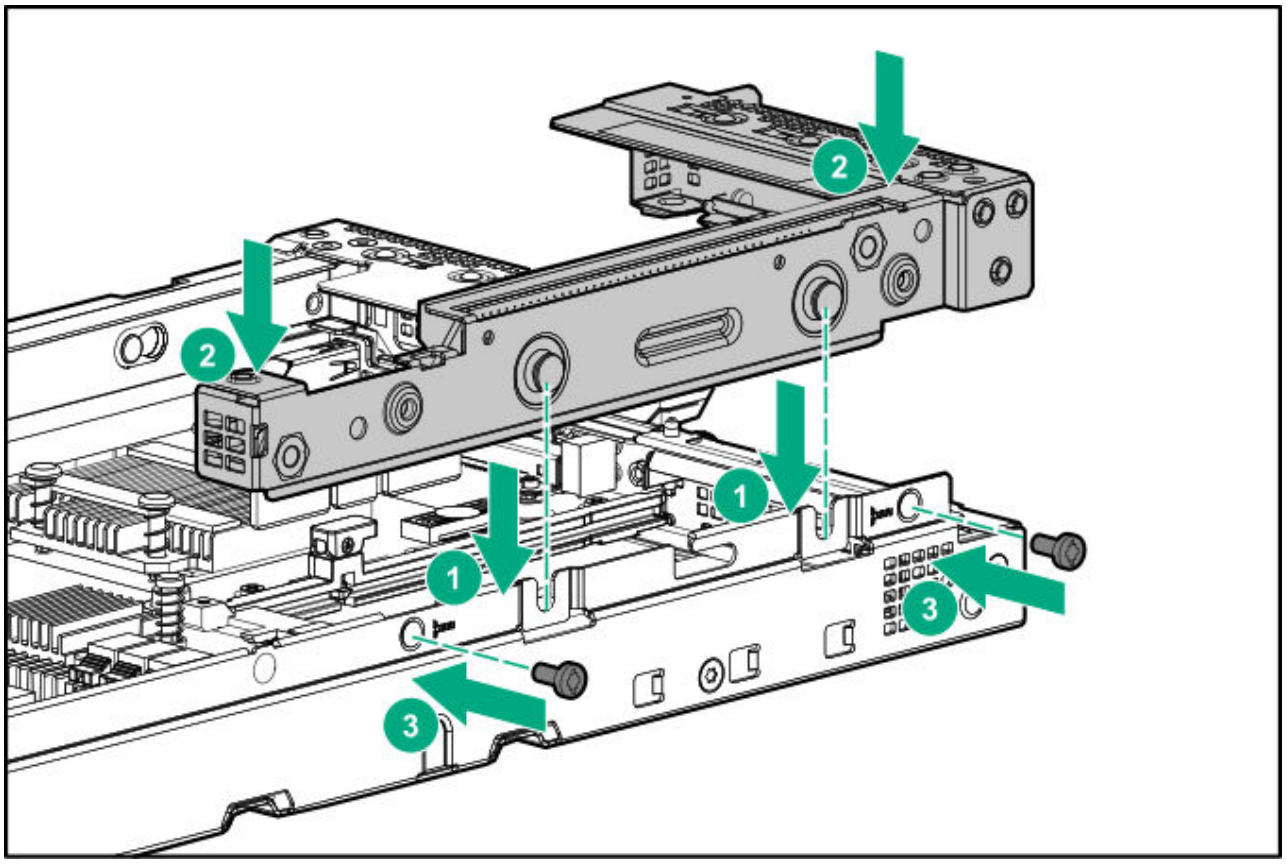

2. If an expansion card or its internal cabling was removed, reinstall these components.
3. If a cooling loop was removed, install the quick connector bracket in the riser:
   a. Insert the quick connector bracket (callout 1).
   b. Install the retainer bracket (callout 2).

c. Install the bracket screw (callout 3).

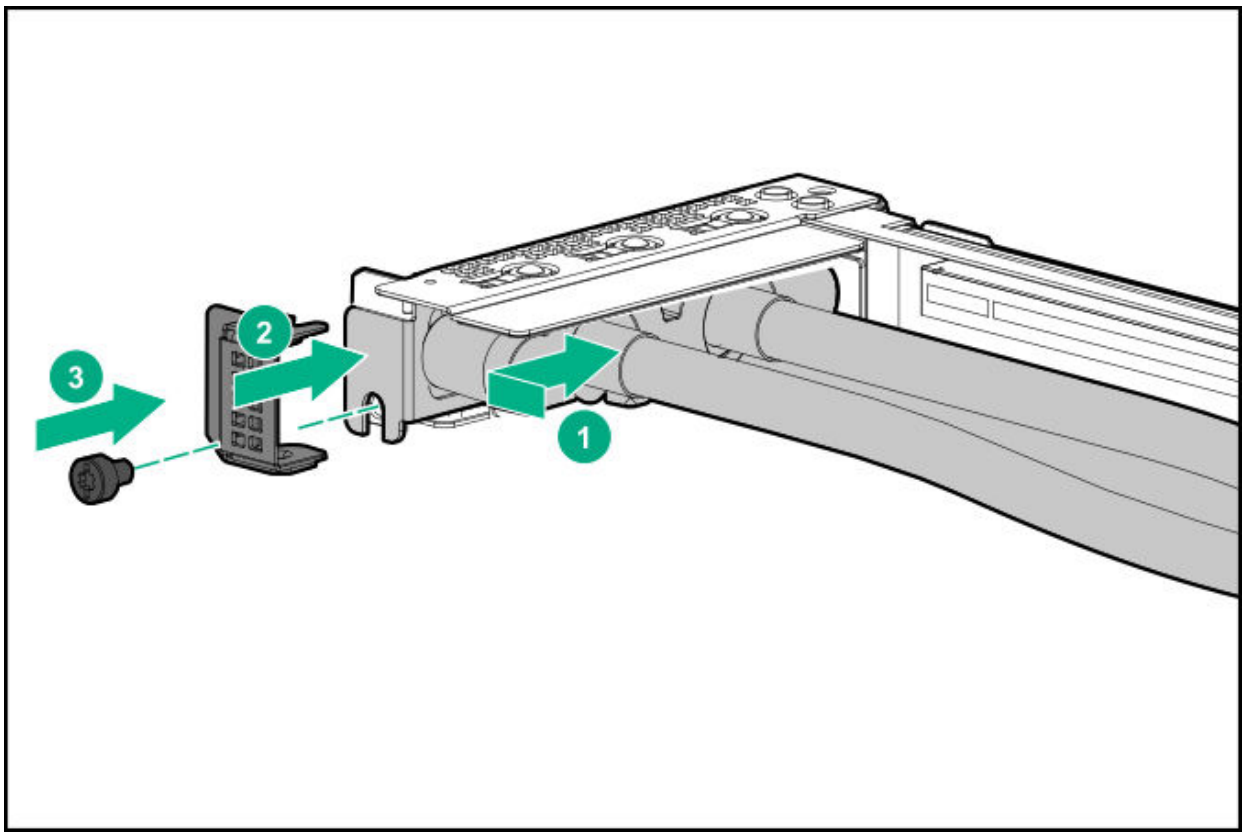

Install the air baffle

Procedure

1. Make sure that the airflow arrow marker on the air baffle points towards the processor socket 1.
2. Align the guides on the air baffle with the pin on the heatsink numbering pointer at one end, and the notch on the server tray at the other end.
3. Position the air baffle between the processor heatsinks.

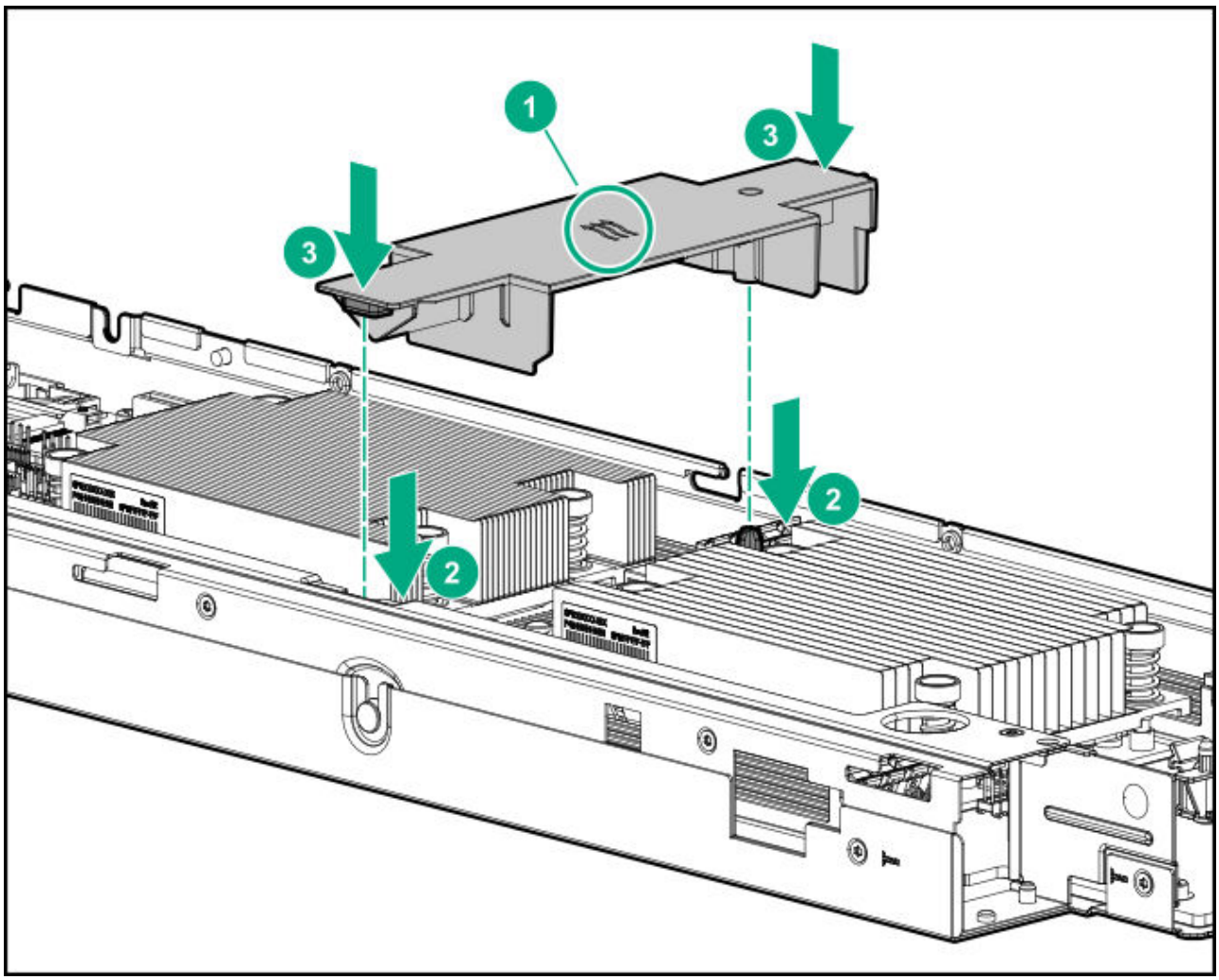

Install the node cover

Procedure

1. Place the node cover on top of the server.
2. Slide the node cover towards the rear end of server.

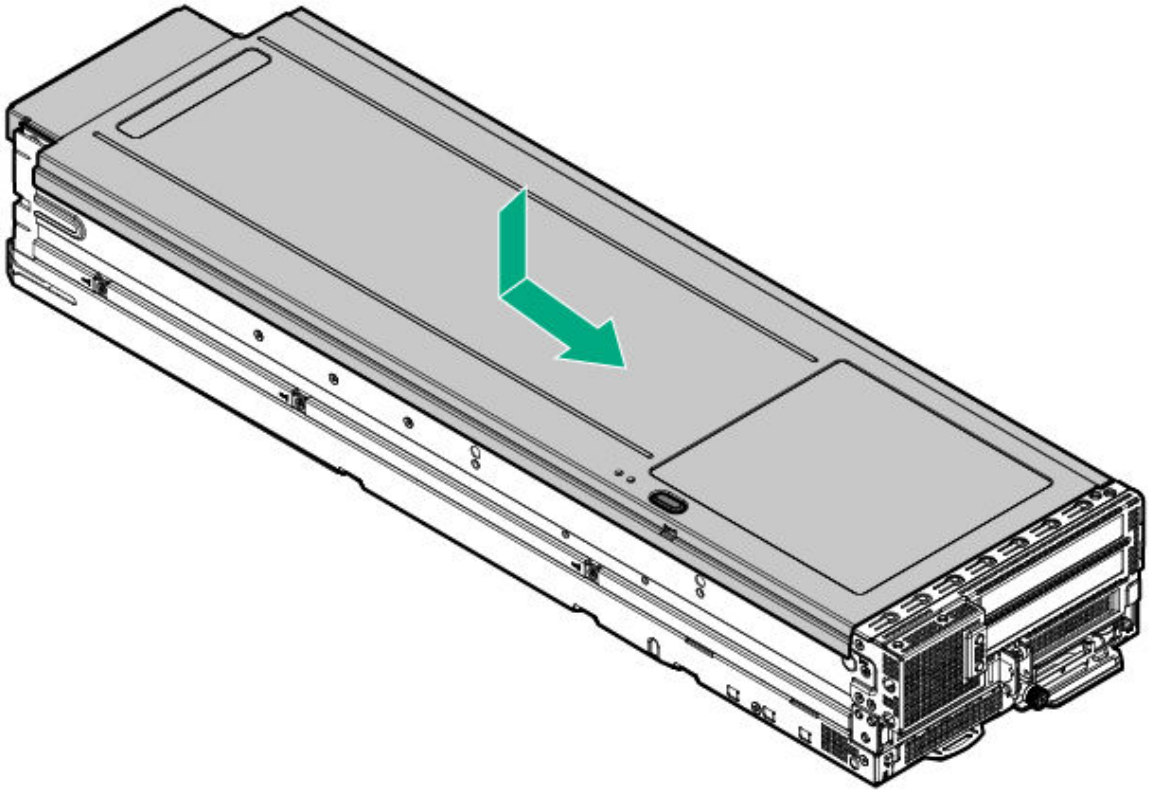

Install the server

About this task

CAUTION:

To avoid accidentally dropping the server, observe the following:

- Always support the bottom of the server when removing and sliding it into the server bay.
- Do not use the release lever as a handle to carry the server.

Procedure

1. Determine the correct orientation for the server installation.
2. If you are installing a server in a system that is operational with fewer than four servers, remove the server blank.

3. Install the server:
   a. Slide the server into the chassis (callout 1).
   b. Close the release lever (callout 2).
   c. Tighten the release lever thumbscrew (callout 3).

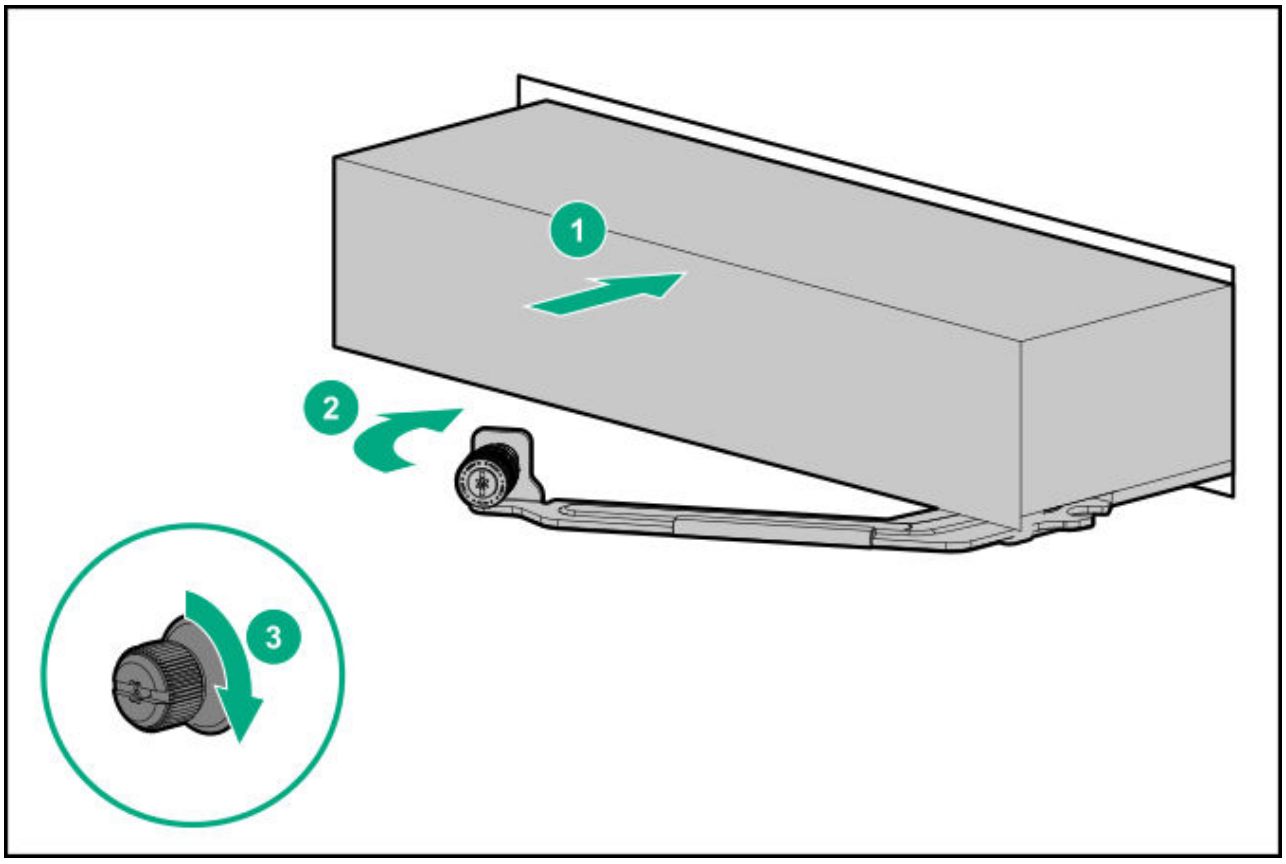

4. Connect all peripheral cables to the server.
5. Power up the server.

Connect the tube set

About this task

Procedure

1. Push the female connector (jack) to the male connector (plug).

2. Rotate the female connector clockwise until it is fully engaged.

> **NOTE:** Ensure hose connections should not come apart easily without twisting.

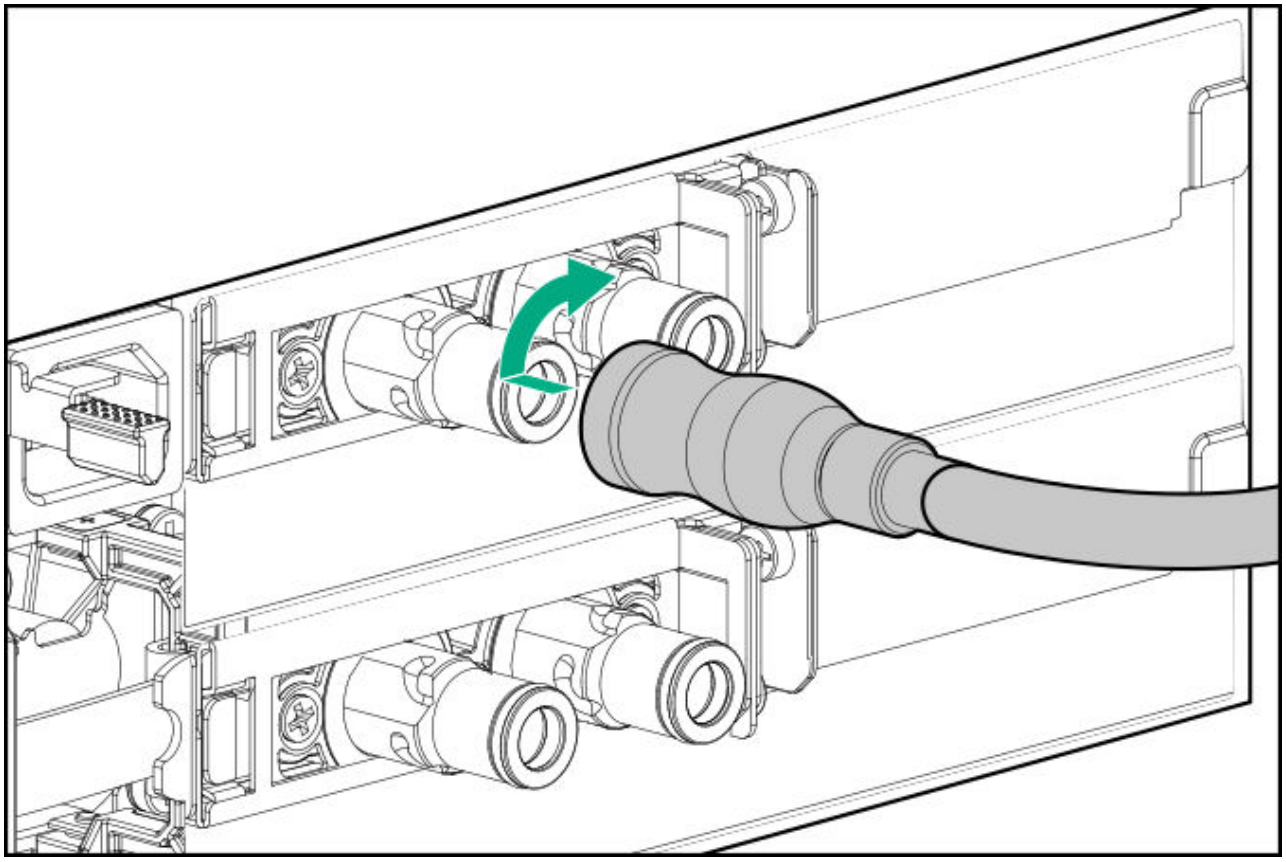

Setup

Subtopics

General site planning
Optional service
Compiling the documentation
Initial system installation
Operational requirements
Server warnings and cautions
Electrostatic discharge
POST screen options

General site planning

Before you begin installing the HPE Apollo 2000 Gen10 Plus System, Hewlett Packard Enterprise recommends that you plan and coordinate the installation process with an authorized HPE representative or partner. Proper planning provides a more efficient installation process and leads to greater availability, reliability, and serviceability of the system.

Optional service

Delivered by experienced, certified engineers, Hewlett Packard Enterprise support services help you keep your servers up and running with support packages tailored specifically for HPE ProLiant systems. Hewlett Packard Enterprise support services let you integrate both hardware and software support into a single package. A number of service level options are available to meet your business and IT needs.

Hewlett Packard Enterprise support services offer upgraded service levels to expand the standard product warranty with easy-to-buy, easy-to-use support packages that will help you make the most of your server investments. Some of the Hewlett Packard Enterprise support services for hardware, software or both are:

- Foundation Care – Keep systems running.
  - 6-Hour Call-to-Repair[1]
  - 4-Hour 24x7
  - Next Business Day
- Proactive Care – Help prevent service incidents and get you to technical experts when there is one.
  - 6-Hour Call-to-Repair[1]
  - 4-Hour 24x7
  - Next Business Day
- Deployment service for both hardware and software
- Hewlett Packard Enterprise Education Services – Help train your IT staff.

[1]The time commitment for this repair service might vary depending on the geographical region of site. For more service information available in your site, contact your local **Hewlett Packard Enterprise support center**.

For more information on Hewlett Packard Enterprise support services, see the **Hewlett Packard Enterprise website**.

Compiling the documentation

The documentation, while delivered individually and in various formats, works as a system. Consult these documents before attempting installation. These documents provide the required important safety information and decision-making steps for the configuration. To access these documents, see the Hewlett Packard Enterprise website (**https://www.hpe.com/info/apollo2000gen10plus-docs**).

Initial system installation

Depending on your technical expertise and the complexity of the product, for the initial system installation, select one of the following options:

- Ordering the HPE Installation Service
- Setting up the server

Subtopics

HPE Installation Service
Setting up the server

HPE Installation Service

HPE Installation Service provides basic installation of Hewlett Packard Enterprise branded equipment, software products, as well as HPE-supported products from other vendors that are sold by HPE or by HPE authorized resellers. The Installation Service is part of a suite of HPE deployment services that are designed to give users the peace of mind that comes from knowing that their HPE and HPE-supported products have been installed by an HPE specialist.

The HPE Installation Service provides the following benefits:

- Installation by an HPE authorized technical specialist.
- Verification prior to installation that all service prerequisites are met.
- Delivery of the service at a mutually scheduled time convenient to your organization.
- Allows your IT resources to stay focused on their core tasks and priorities.
- Full coverage during the warranty period for products that require installation by an HPE authorized technical specialist.

For more information on the features, limitations, provisions, and ordering information of the HPE Installation Service, see this Hewlett Packard Enterprise website:

https://www.hpe.com/support/installation-service

Setting up the server

Prerequisites

Before setting up the server, do the following:

- Download the latest SPP:
  https://www.hpe.com/servers/spp/download

  Support validation required
- Obtain the storage driver if needed:
  - Download it from the HPE Support Center website:

    https://www.hpe.com/support/hpesc
  - Extract it from the SPP.
- Verify that your OS or virtualization software is supported:
  https://www.hpe.com/info/ossupport
- Read the HPE UEFI requirements for ProLiant servers on the HPE website:

  https://www.hpe.com/support/Gen10UEFI

  If the UEFI requirements are not met, you might experience boot failures or other errors when installing the operating system.
- Read the safety and compliance information on the HPE website:
  https://www.hpe.com/support/safety-compliance-enterpriseproducts
- Read the system operational requirements.
- Read the server warnings and cautions.

About this task

This procedure is for installing a new server in an existing operational chassis.

If you are installing an entirely new Apollo 2000 Gen10 Plus System—new servers and new chassis—see Setting up the system in the chassis user guide on the HPE website (**https://www.hpe.com/info/apollo2000gen10plus-docs**).

Procedure

Unbox the server

1. Unbox the server and verify the contents:
   - Server
   - Documentation

Install the hardware options

2. (Optional) Install the server hardware options. For installation instructions, see Hardware options installation.
3. If you are installing the new server in a new chassis, install the rack rails, and then install the chassis into the rack.

   See the HPE Apollo 2000 Gen10 Plus System Rack Rail Kit Installation Instructions:

   https://www.hpe.com/support/apollo2000gen10plus-rackrail

Install the server

4. Remove the server blank.
5. Install the server.
6. Connect all peripheral cables to the server.
7. If the server is using a DLC cooling loop, connect the tube set.
8. Decide how to manage the server:
   - Locally: Use a KVM switch or a connect a keyboard, monitor, and mouse.
   - Remotely: Connect to the iLO web interface and run a remote console:
     a. Verify the following:
        - iLO is licensed to use the remote console feature.
          If iLO is not licensed, visit the HPE website:

          https://www.hpe.com/info/ilo

        - The iLO Management Port is connected to a secure network.

     b. Using a browser, navigate to the iLO web interface, and then log in.
        ```
        https://<iLO hostname or IP address>
        ```
        Note the following:
        - The iLO hostname is on the serial number/iLO information pull tab.
        - If a DHCP server assigns the IP address, the IP address appears on the boot screen.
        - If a static IP address is assigned, use that IP address.
        - The default login credentials are on the serial number/iLO information pull tab.

c. In the side navigation, click the **Remote Console & Media** link, and then launch a remote console.

Power on the server

9. Press the Power On/Standby button.

   For remote management, use the iLO virtual power button.

10. Using the SPP, update the following:

    - System ROM
    - Storage controller
    - Network controller

Set up the storage

11. Set up the storage. Do one of the following:

    - To configure the server to boot from a SAN, see the following guide: **https://www.hpe.com/info/boot-from-san-config-guide**
    - If an HPE Smart Array controller is installed, use the HPE Smart Storage Administrator to create arrays:

      a. From the boot screen, press **F10** to run Intelligent Provisioning.

      b. From Intelligent Provisioning, run HPE Smart Storage Administrator.

    - If no controller option is installed, do one of the following:
      - AHCI is enabled by default. You can deploy an OS or virtualization software.
      - Disable AHCI, enable software RAID, and then create an array:

        a. From the boot screen, press **F9** to run UEFI System Utilities.

        b. From the **System Utilities** screen, select **System Configuration > BIOS/Platform Configuration (RBSU) > Storage Options > SATA Controller Options > Embedded SATA Configuration**.

        c. From the **SmartRAID SW RAID Support** drop-down menu, select **Enable**, and then click **OK**.

        If you see a warning regrading Legacy BIOS mode, click **OK**.

        d. Save the configuration and reboot the server.

        e. Create an array:

        i. From the boot screen, press **F9** to run UEFI System Utilities.

        ii. From the **System Utilities** screen, select **System Configuration > Embedded Storage: HPE SR100i Gen10 Plus SW RAID > Array Configuration > Create Array**.

Deploy an OS or virtualization software

.2. Deploy an OS or virtualization software:

a. Do one of the following:

- For single-server local OS deployment, use an OS installation media (USB key or DVD). Press **F11** at the boot screen to select the boot device.
- For single-server remote OS deployment, click **Virtual Drives** in the iLO remote console to mount images, drivers, or files to a virtual folder.

  If a storage driver is required to install the OS, use the virtual folder to store the driver.
- For multiple server OS deployments in a cluster, use GUID-A0E1D956-308A-4553-9B92-762210F840BB.html#GUID-A0E1D956-308A-4553-9B92-762210F840BB.

b. Using the SPP, update the system drivers.

Register the server

.3. To experience quicker service and more efficient support, register the server at the HPE website:

https://myenterpriselicense.hpe.com

Operational requirements

Subtopics

Site requirements
Space and airflow requirements
Temperature requirements
Power requirements
Grounding requirements
Device bay thermal requirements

Site requirements

The server must be located in a computer room or server room. The room must:

- Be only accessible to authorized technicians trained the room restriction reasons and precautions.
- Be within an area that is ideally locked or at minimum not accessible to unauthorized personnel.

Space and airflow requirements

To allow for servicing and adequate airflow, observe the following space and airflow requirements when deciding where to install a rack:

- Leave a minimum clearance of 63.5 cm (25 in) in front of the rack.
- Leave a minimum clearance of 76.2 cm (30 in) behind the rack.
- Leave a minimum clearance of 121.9 cm (48 in) from the back of the rack to the back of another rack or row of racks.

Hewlett Packard Enterprise servers draw in cool air through the front door and expel warm air through the rear door. Therefore, the front and rear rack doors must be adequately ventilated to allow ambient room air to enter the cabinet, and the rear door must be adequately ventilated to allow the warm air to escape from the cabinet.

CAUTION:

To prevent improper cooling and damage to the equipment, do not block the ventilation openings.

When vertical space in the rack is not filled by a server or rack component, the gaps between the components cause changes in airflow through the rack and across the servers. Cover all gaps with blanking panels to maintain proper airflow.

CAUTION:

Always use blanking panels to fill empty vertical spaces in the rack. This arrangement ensures proper airflow. Using a rack without blanking panels results in improper cooling that can lead to thermal damage.

CAUTION:

If a third-party rack is used, observe the following additional requirements to ensure adequate airflow and to prevent damage to the equipment:

- Front and rear doors—If the 42U rack includes closing front and rear doors, you must allow 5,350 sq cm (830 sq in) of holes evenly distributed from top to bottom to permit adequate airflow (equivalent to the required 64 percent open area for ventilation).
- Side—The clearance between the installed rack component and the side panels of the rack must be a minimum of 7 cm (2.75 in).

Temperature requirements

To ensure continued safe and reliable equipment operation, install or position the system in a well-ventilated, climate-controlled environment.

The maximum recommended ambient operating temperature (TMRA) for most server products is 35°C (95°F). The temperature in the room where the rack is located must not exceed 35°C (95°F).

CAUTION: To reduce the risk of damage to the equipment when installing third-party options:

- Do not permit optional equipment to impede airflow around the server or to increase the internal rack temperature beyond the maximum allowable limits.
- Do not exceed the manufacturer's TMRA.

Power requirements

Installation of this equipment must comply with local and regional electrical regulations governing the installation of IT equipment by licensed electricians. This equipment is designed to operate in installations covered by NFPA 70, 1999 Edition (National Electric Code) and NFPA-75, 1992 (code for Protection of Electronic Computer/Data Processing Equipment). For electrical power ratings on options, refer to the product rating label or the user documentation supplied with that option.

WARNING:

To reduce the risk of personal injury, fire, or damage to the equipment, do not overload the AC supply branch circuit that provides power to the rack. Consult the electrical authority having jurisdiction over wiring and installation requirements of your facility.

CAUTION:

Protect the server from power fluctuations and temporary interruptions with a regulating UPS. This device protects the hardware from damage caused by power surges and voltage spikes and keeps the server in operation during a power failure.

Grounding requirements

- The building installation must provide a means of connection to protective earth.
- The equipment must be connected to that means of connection.
- A service person must check whether the socket-outlet from which the equipment is to be powered provides a connection to the building protective earth. If the outlet does not provide a connection, the service person must arrange for the installation of a protective earthing conductor from the separate protective earthing terminal to the protective earth wire in the building.

Device bay thermal requirements

Operate the chassis only when a device or blank is installed in all device bays. Before powering up the chassis, be sure to do the following:

- Install a drive or drive blank into all drive bays.
- Install a server or a blank into all server bays.
- Install a power supply or power supply blank into all power supply bays.

Server warnings and cautions

WARNING:

To reduce the risk of personal injury, electric shock, or damage to the equipment, disconnect the power cord to remove power from the server. Pressing the Power On/Standby button does not shut off system power completely. Portions of the power supply and some internal circuitry remain active until AC power is removed.

WARNING: To reduce the risk of personal injury from hot surfaces, allow the drives and the internal system components to cool before touching them.

WARNING: To reduce the risk of electric shock or damage to the equipment:

- Never reach inside the chassis while the system is powered up.
- Perform service on system components only as instructed in the user documentation.

WARNING:

To reduce the risk of fire or burns after removing the energy pack:

- Do not disassemble, crush, or puncture the energy pack.
- Do not short external contacts.
- Do not dispose of the energy pack in fire or water.
- Do not expose the energy pack to low air pressure as it might lead to explosion or leakage of flammable liquid or gas.
- Do not expose the energy pack to temperatures higher than 60°C (140°F).

After power is disconnected, battery voltage might still be present for 1s to 160s.

CAUTION:

Protect the server from power fluctuations and temporary interruptions with a regulating UPS. This device protects the hardware from damage caused by power surges and voltage spikes and keeps the server in operation during a power failure.

CAUTION:

Electrostatic discharge

Be aware of the precautions you must follow when setting up the system or handling components. A discharge of static electricity from a finger or other conductor may damage system boards or other static-sensitive devices. This type of damage may reduce the life expectancy of the system or component.

To prevent electrostatic damage:

- Avoid hand contact by transporting and storing products in static-safe containers.
- Keep electrostatic-sensitive parts in their containers until they arrive at static-free workstations.
- Place parts on a grounded surface before removing them from their containers.
- Avoid touching pins, leads, or circuitry.
- Always be properly grounded when touching a static-sensitive component or assembly. Use one or more of the following methods when handling or installing electrostatic-sensitive parts:
  - Use a wrist strap connected by a ground cord to a grounded workstation or computer chassis. Wrist straps are flexible straps with a minimum of 1 megohm ±10 percent resistance in the ground cords. To provide proper ground, wear the strap snug against the skin.
  - Use heel straps, toe straps, or boot straps at standing workstations. Wear the straps on both feet when standing on conductive floors or dissipating floor mats.
  - Use conductive field service tools.
  - Use a portable field service kit with a folding static-dissipating work mat.

  If you do not have any of the suggested equipment for proper grounding, have an authorized reseller install the part.

For more information on static electricity or assistance with product installation, contact an authorized reseller.

POST screen options

About this task

When the server is powered on, the POST screen is displayed. The following options are displayed:

- System Utilities (**F9**)
  Use this option to configure the system BIOS.

- Intelligent Provisioning (**F10**)
  Use this option to deploy an operating system or configure storage.
- Boot menu (**F11**)
  Use this option to make a one-time boot selection.
- Network boot (**F12**)
  Use this option to boot the server from the network.

Hardware options installation

Subtopics

Hardware option installation guidelines
SUV cable option
Transceiver option
PCIe riser options
Storage controller cable options
Storage controller options
Expansion card options
OCP NIC 3.0 adapter option
Processor and heatsink options
Memory options
Mezzanine card option
HPE Trusted Platform Module 2.0 Gen10 Plus option

Hardware option installation guidelines

WARNING: To reduce the risk of personal injury from hot surfaces, allow the drives and the internal system components to cool before touching them.

CAUTION:

To avoid data loss, Hewlett Packard Enterprise recommends that you back up all server data before installing or removing a hardware option, or performing a server maintenance or troubleshooting procedure.

CAUTION:

To prevent damage to electrical components, properly ground the server before beginning any installation, removal, or replacement procedure. Improper grounding can cause electrostatic discharge.

- Install any hardware options before initializing the system.
- If multiple options are being installed, read the installation instructions for all the hardware options to identify similar steps and streamline the installation process.
- If the hardware option installation involves internal cabling, review the .

SUV cable option

CAUTION:

To avoid equipment damage when removing the SUV cable, press and hold the release buttons on the SUV cable connector before disconnecting the cable from the SUV port.

Use an SUV cable to perform server administration, configuration, and diagnostic procedures by connecting video and USB devices directly to the server.

Subtopics

SUV cable components
Using the SUV cable in a KVM setup
Using the SUV cable to access a USB drive in a KVM setup

SUV cable components

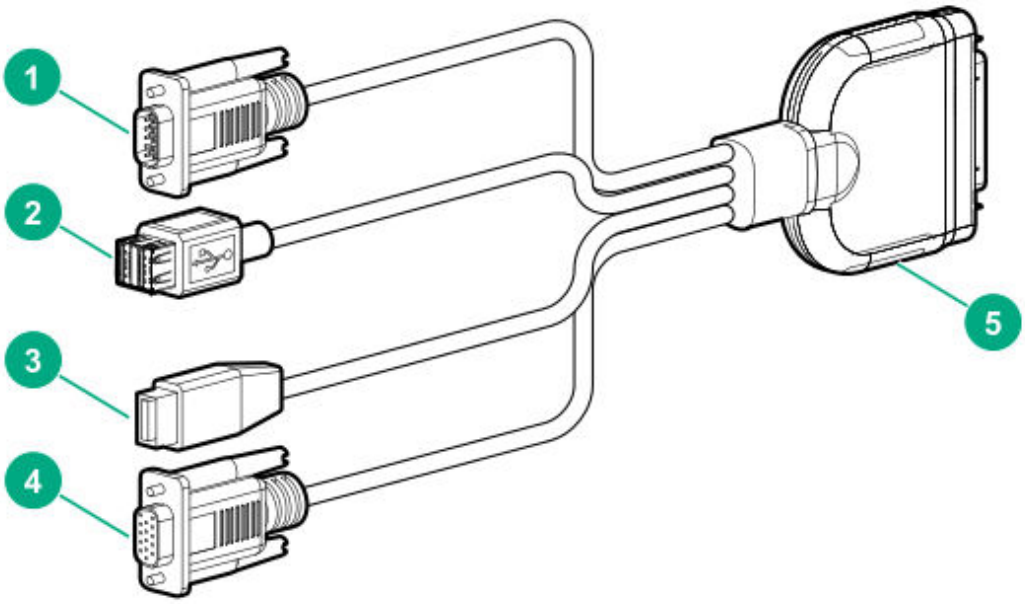

Item	Component	Function
1	Serial port	Connect a null modem serial cable to perform diagnostic procedures. [1]
2	USB 2.0 Type-A ports (2) [2]	Connect USB devices.
3	iLO service port	• Connect a FAT32 formatted USB flash drive [3] to download the Active Health System log. • Connect a client system using a supported USB to Ethernet adapter and access the iLO web interface, remote console, CLI, and iLO RESTful API. For more information, see the iLO user guide on the HPE website (**https://www.hpe.com/support/ilo-docs**).
4	VGA port	Connect an analog display device.
5	SUV connector	Connect to the server SUV port.

[1] For trained personnel only
[2] These ports do not support USB devices that require a power source greater than 500 mA at 5 V.
[3] A USB device connected to the iLO service port is not accessible to the host operating system.

Using the SUV cable in a KVM setup

Procedure

1. Connect the SUV cable to the SUV port.
2. Connect a monitor to the VGA port.
3. Connect a USB mouse to one of the USB ports.
4. Connect a USB keyboard to the other USB port.

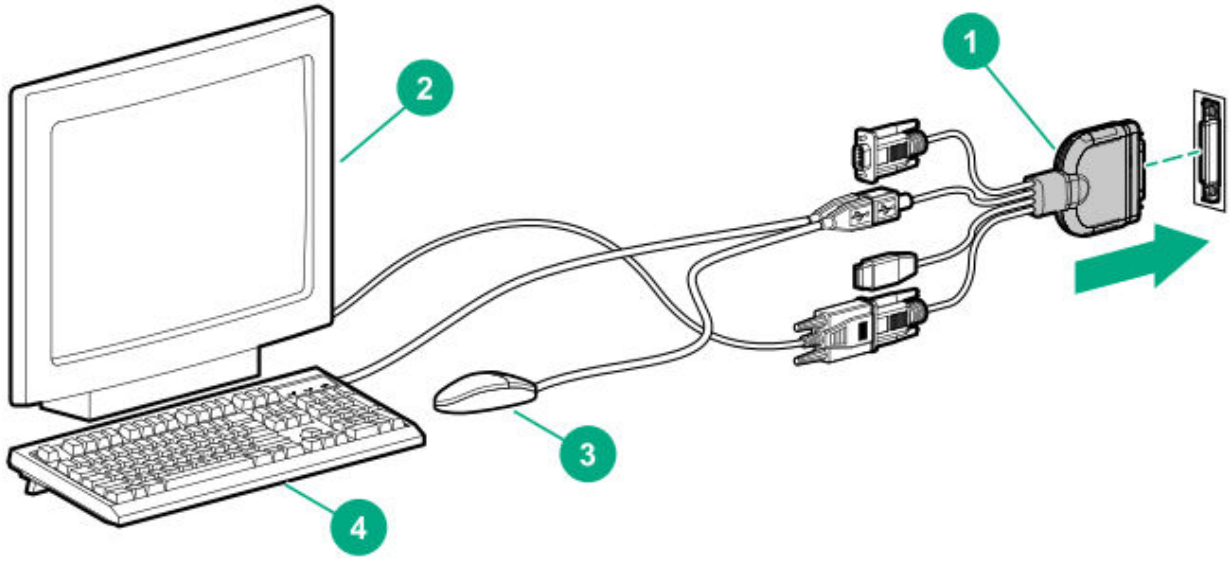

Using the SUV cable to access a USB drive in a KVM setup

About this task

The USB ports on the SUV cable do not support USB devices that require a power source greater than 500 mA at 5 V. When accessing this type of USB drives, such as a USB key or a USB optical drive, use a USB hub in a KVM setup.

Procedure

1. Connect the SUV cable to the SUV port.

2. Connect a monitor to the VGA port.
3. Connect a USB hub to one of the USB ports.
4. Connect a USB mouse to the USB hub.
5. Connect a USB keyboard to the USB hub.
6. Connect a USB key or a USB optical drive to the USB hub.

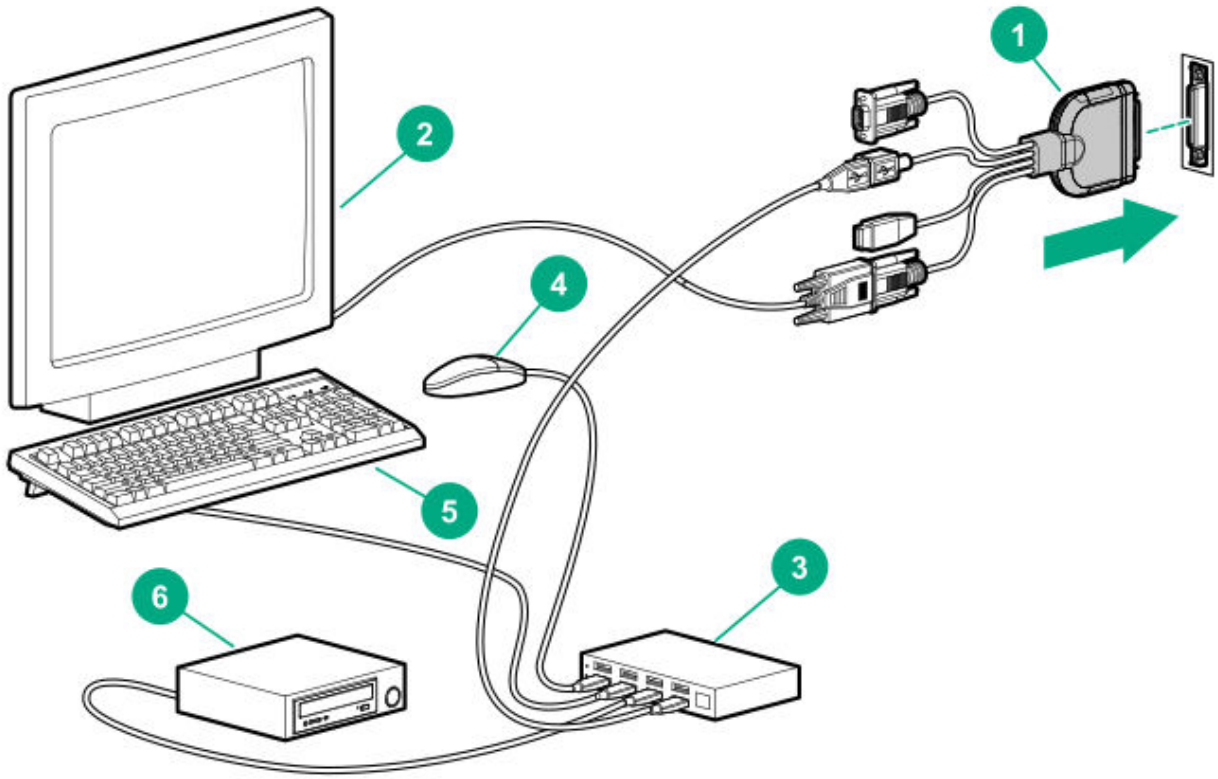

Transceiver option

Subtopics

Transceiver warnings and cautions
Installing a transceiver

Transceiver warnings and cautions

WARNING:

Fiber-optic transceivers and fiber-optic cables connected to transceivers emit laser light that can damage your eyes. To avoid eye injuries, avoid direct eye exposure to the beam from the fiber-optic transceiver or into the ends of fiber-optic cables when they are powered-up.

CAUTION:

The presence of dust in transceiver ports can cause poor cable connectivity. To prevent dust from entering, install a dust plug in an unused transceiver port.

CAUTION:

Supported transceivers can be hot-swapped—removed and installed while the server is powered-on. However, to prevent potential damage to the transceiver or the fiber-optic cable, disconnect the cable from the transceiver before hot-swapping it.

CAUTION:

Do not remove and install transceivers more often than is necessary. Doing so can shorten the useful life of the transceiver.

IMPORTANT:

When you replace a transceiver with another of a different type, the server might retain selected port-specific configuration settings that were configured for the replaced transceiver. Be sure to validate or reconfigure port settings as required.

Installing a transceiver

Prerequisites

Before installing a transceiver option:

- Make sure that a compatible network adapter is installed in the node. Determine if installing the transceiver in the network adapter requires a specific system operating temperature. For more information, see the HPE website (**https://www.hpe.com/support/xl225ngen10plus-thermal**).
- Review the following:

- Transceiver warnings and cautions
- Transceiver documentation for specific operational and cabling requirements

Procedure

1. Hold the transceiver by its sides and gently insert it into the network adapter port until it clicks into place.

   Transceivers are keyed so that they can only be inserted in the correct orientation. If the transceiver does not fit easily into the port, you might have positioned it incorrectly. Reverse the orientation of the transceiver and insert it again.

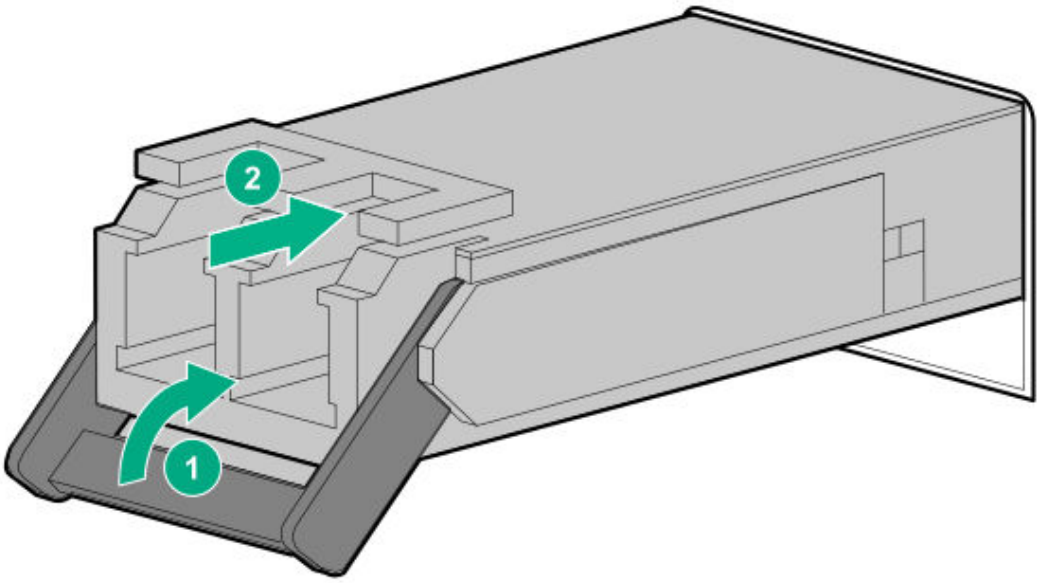

2. Remove the dust plug or protective cover from the transceiver.
3. Connect a compatible LAN segment cable to the transceiver.
4. Make sure that the NIC link LED on the port is solid green.

   For more information on the port LED behavior, see the documentation that ships with the transceiver.

5. If needed, see the transceiver documentation for the model-specific fastening mechanism applicable to the transceiver.

Results

The installation is complete.

PCIe riser options

The server support single–slot PCIe riser options for expansion card installation. The following table provides more information about the riser options.

Riser option	Slot number	PCIe technology	Physical connector link width	Signal source
Primary riser (P20260-B21)	1	PCIe 4.0	x16	Processor 1
P1 secondary riser (P20261-B21)	2	PCIe 4.0	x16	Processor 1
P2 secondary riser (P20264-B21)	2	PCIe 4.0	x16	Processor 2
P1 secondary riser for direct attach NVMe SSD (P20263-B21) [1]	2	PCIe 4.0	x16	PCIe signal: Processor 1 NVMe signal: Processor 2

[1] This riser is supported only in dual-processor configurations. One riser supports up to two NVMe SSDs per node.

These risers support the installation of half–height, half–length (low–profile) expansion cards. For more information, see PCIe expansion option population rules.

Subtopics

Installing the primary riser board
Installing the secondary riser board

Installing the primary riser board

Prerequisites

Before you perform this procedure, make sure that you have the following items available:

- T-10 Torx screwdriver
- T-15 Torx screwdriver

Procedure

1. Power down the server.
2. If installed, disconnect the tube set.

3. Disconnect all peripheral cables from the server.
4. Remove the server.
5. Place the server on a flat, level work surface.
6. Remove the node cover.
7. Remove the riser cage screws (callout 1), and then lift the cage off the system board (callout 2).

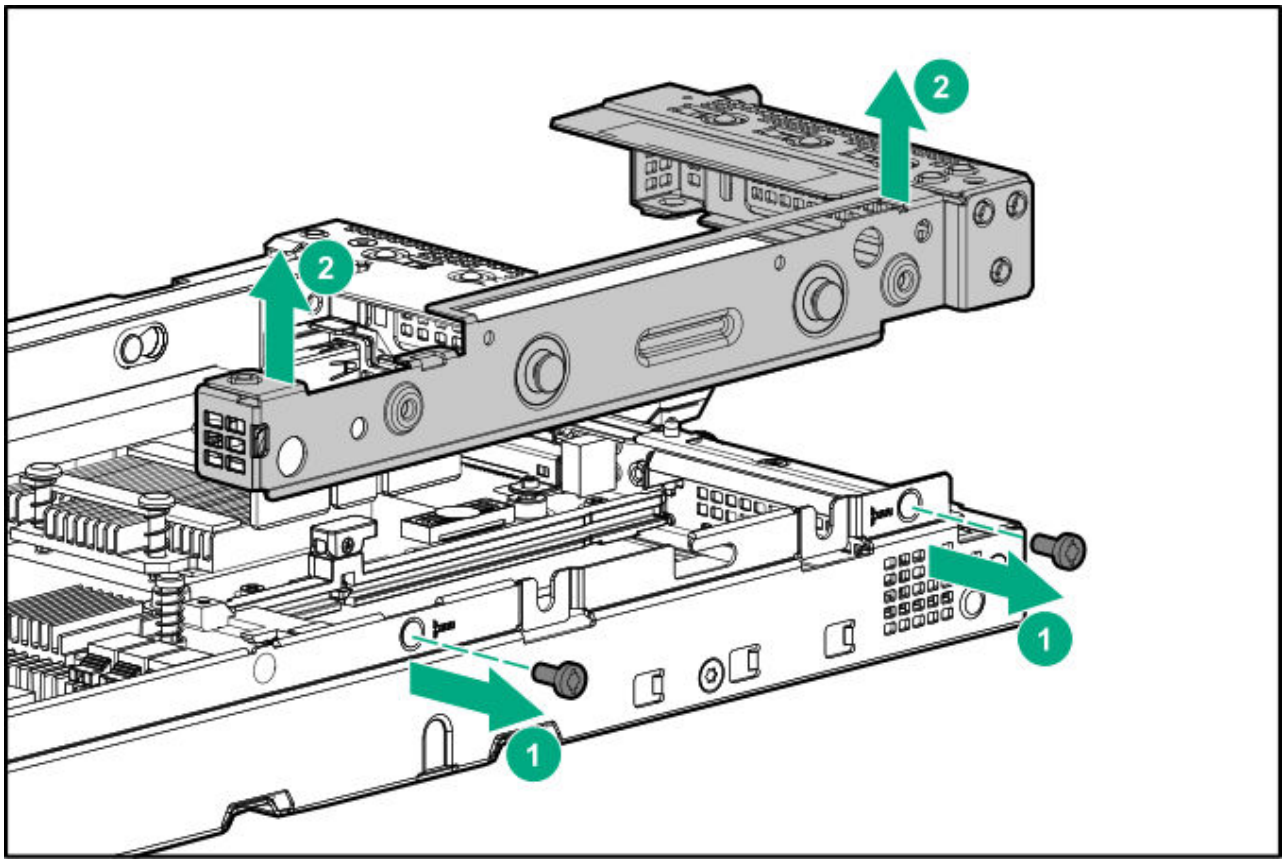

8. Install the primary riser board:
   a. Attach the riser board to the cage (callout 1).
   b. Install riser board screws (callout 2).

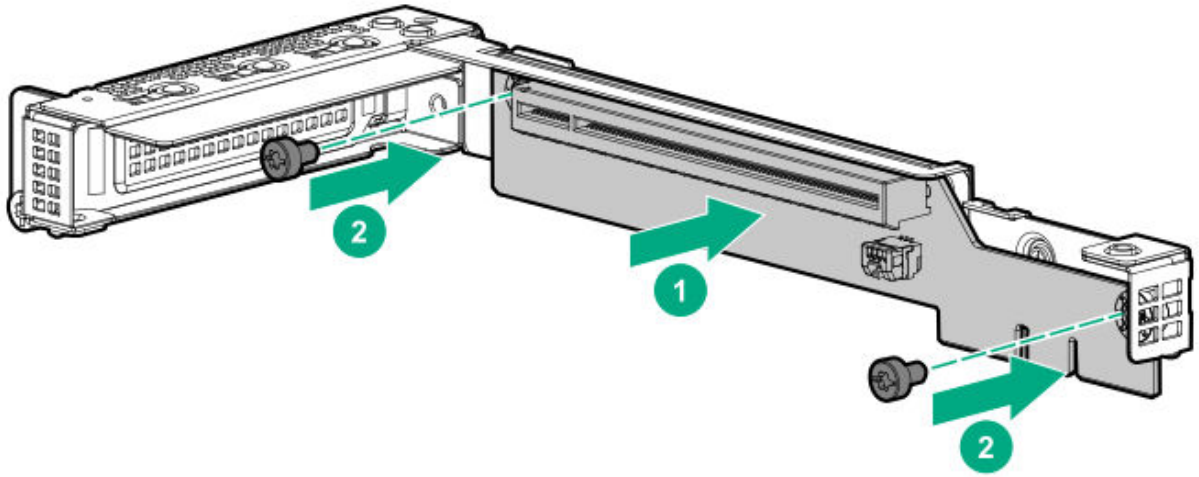

9. If you are planning to install an expansion card in this riser, install it now.

.0. Install the primary riser:

   a. Align the spools on the riser with the notches on the server tray (callout 1).

   b. Carefully press the riser down on its system board connector (callout 2).

      Make sure that the riser board is firmly seated.

   c. Install the riser screws (callout 3).

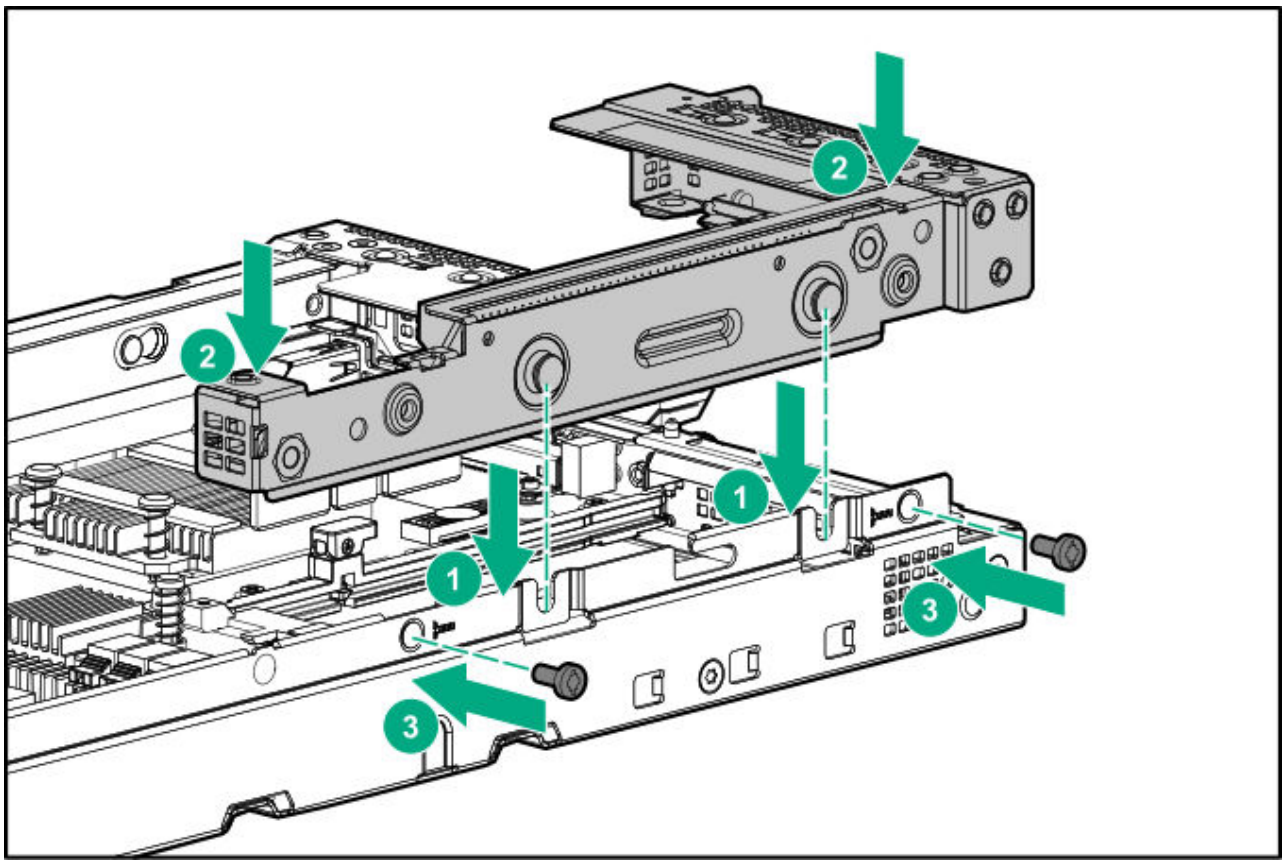

1. Install the node cover.
2. Install the server.
3. Connect all peripheral cables to the server.
4. If removed, connect the tube set.
5. Power up the server.

Results

The installation is complete.

Installing the secondary riser board

Prerequisites

Before you perform this procedure, make sure that you have the following items available:

- T-10 Torx screwdriver

- T-15 Torx screwdriver

Procedure

1. Power down the server.
2. Disconnect all peripheral cables from the server.
3. Remove the server.
4. Place the server on a flat, level work surface.
5. Remove the node cover.
6. Remove the air baffle.

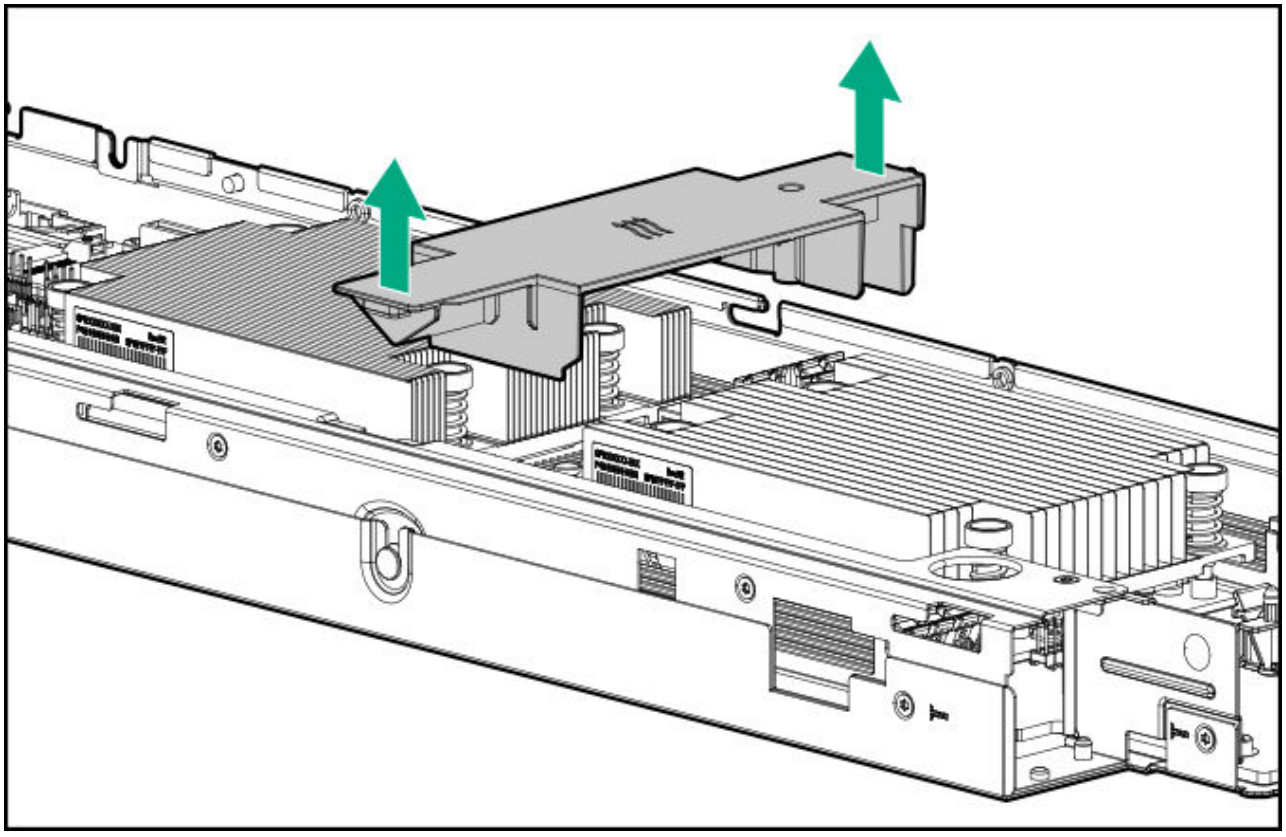

7. Remove the riser cage screws (callout 1), and then lift the riser cage off the system board (callout 2).

   There is a hole on the front end of the riser cage for finger access in pulling up the riser.

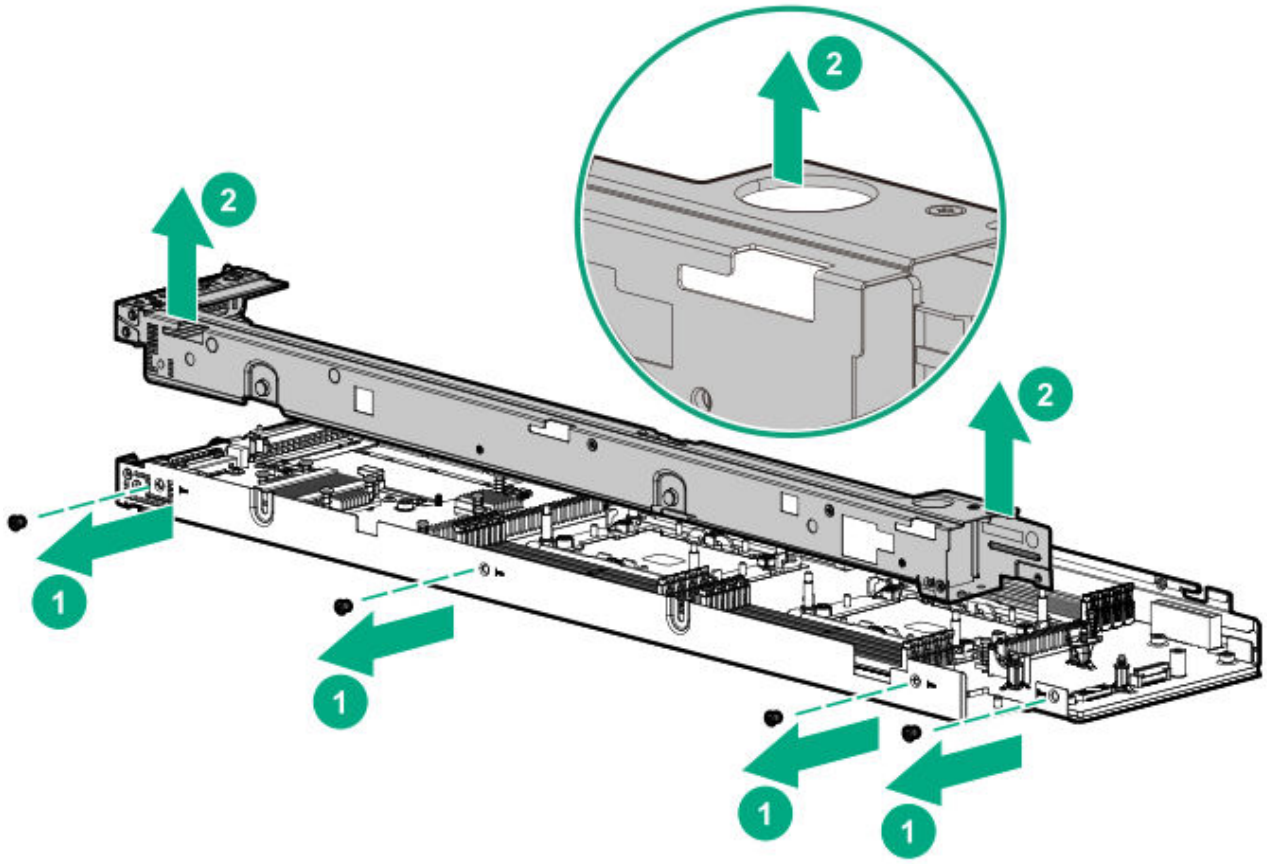

8. Remove the interconnect receptacle bracket.

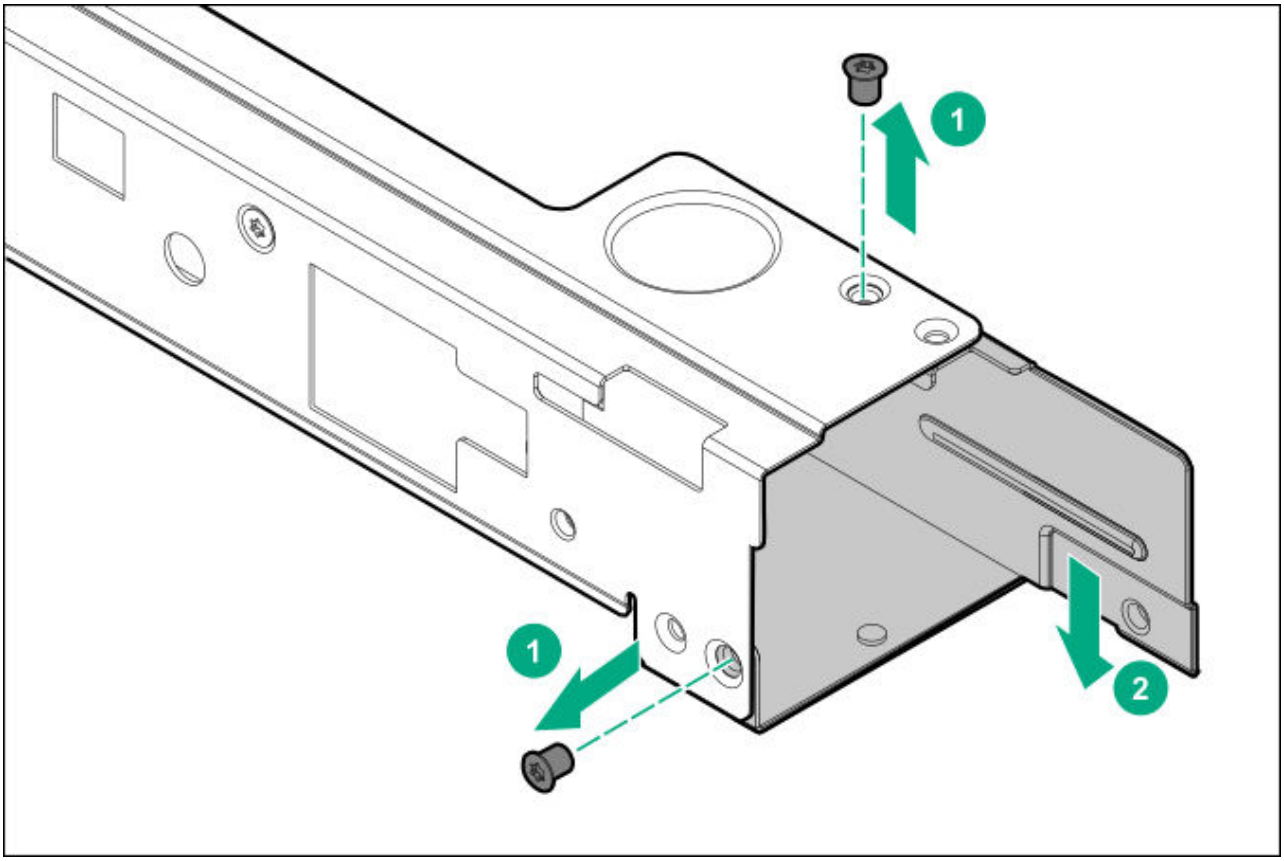

9. If you are installing the onboard SATA cable or a Smart Array type-p controller cable, attach the controller cable to the riser board:

   a. Connect the controller cable to the SlimSAS port.

   b. Secure the controller cable with the clip.

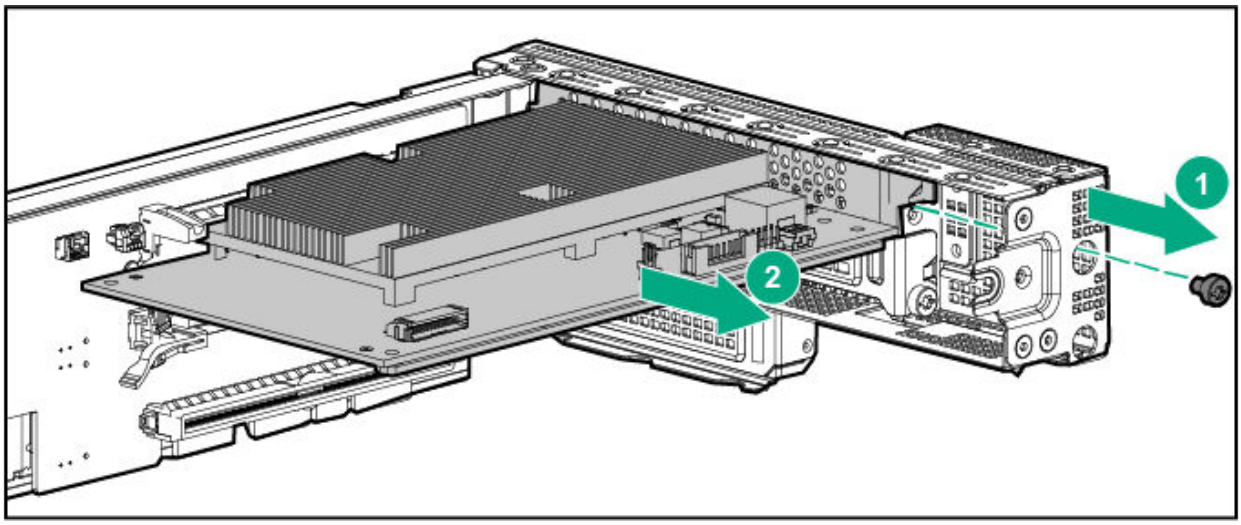

.0. Install the secondary riser board:

a. Insert the bracket spools into the holes on the board.

b. Slide the riser board towards the direction of the slot blank.

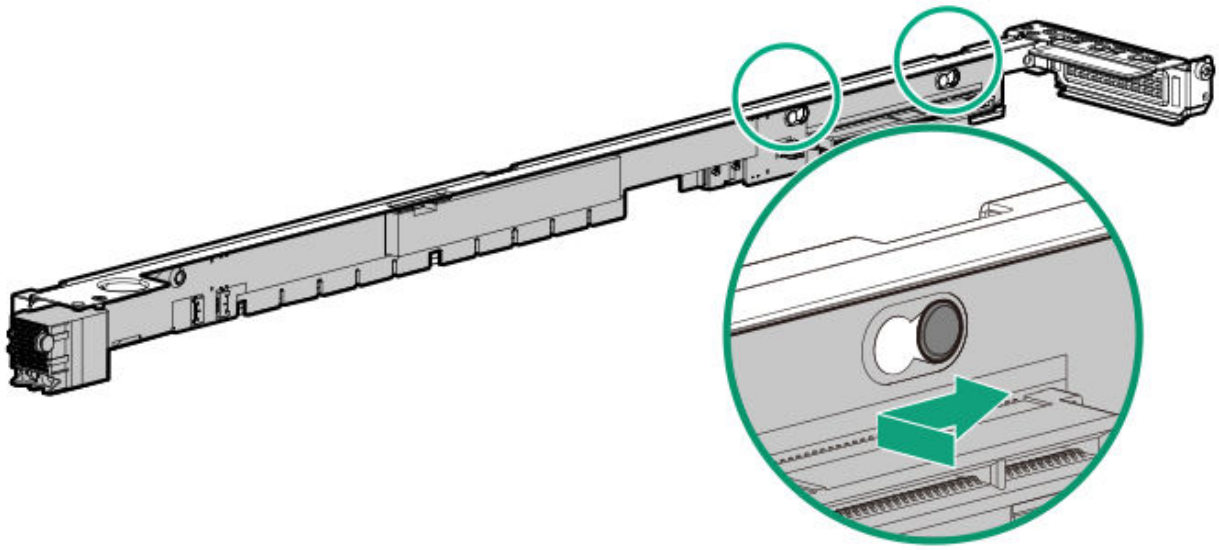

c. Install the riser board screws.

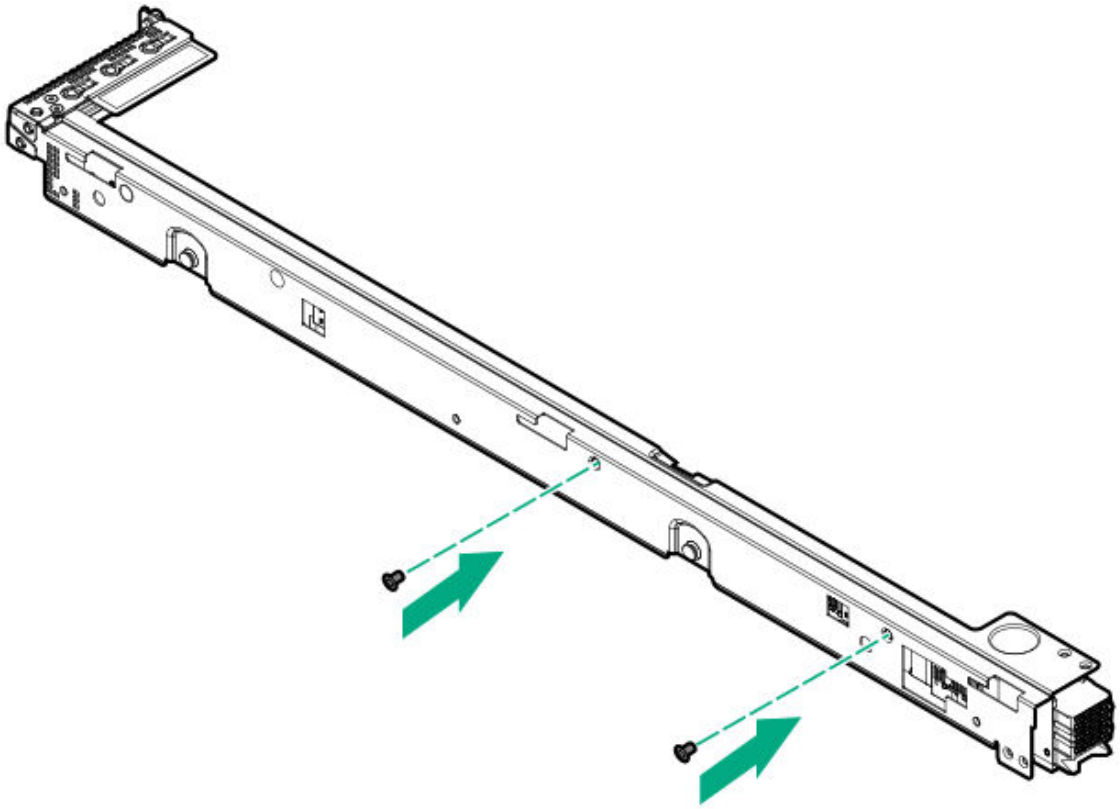

.1. Install the interconnect receptacle bracket:

a. Use the spools to position the interconnect receptacle bracket.

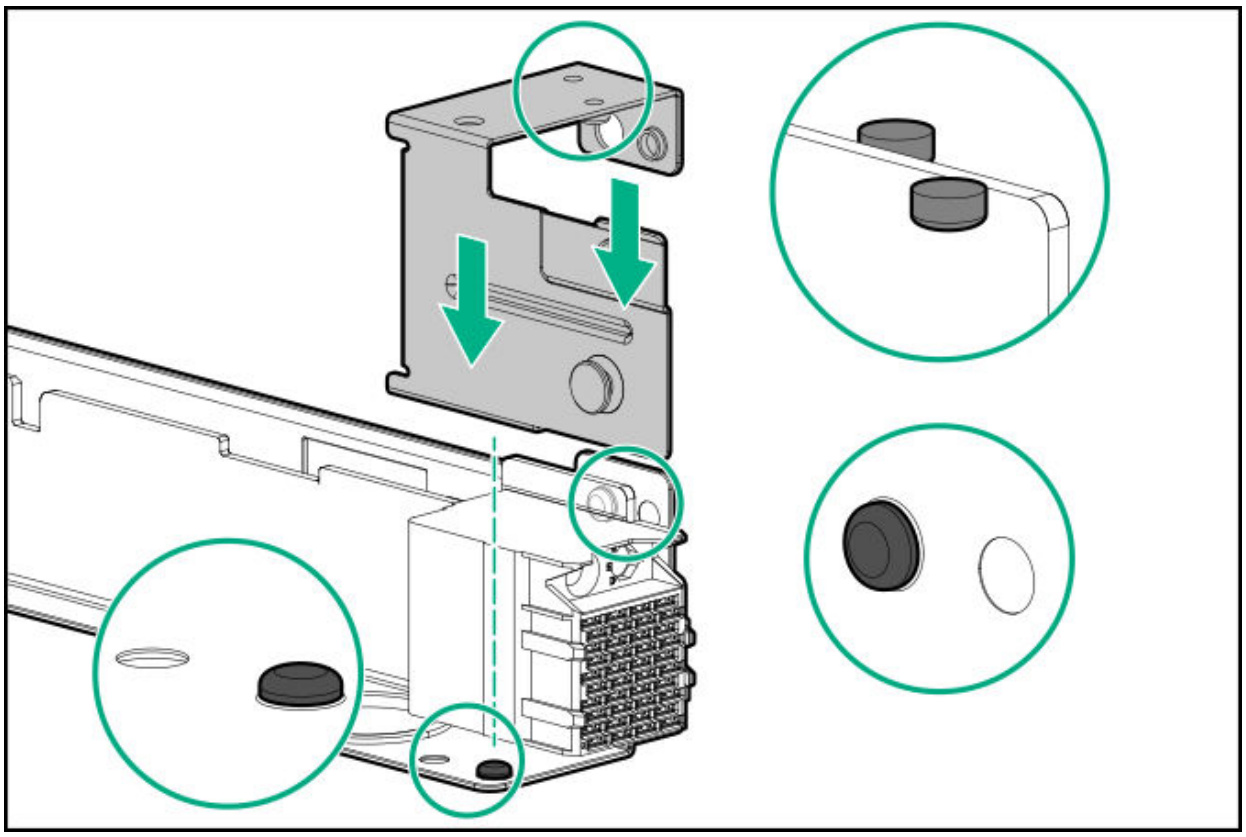

b. Install the interconnect receptacle bracket screws.

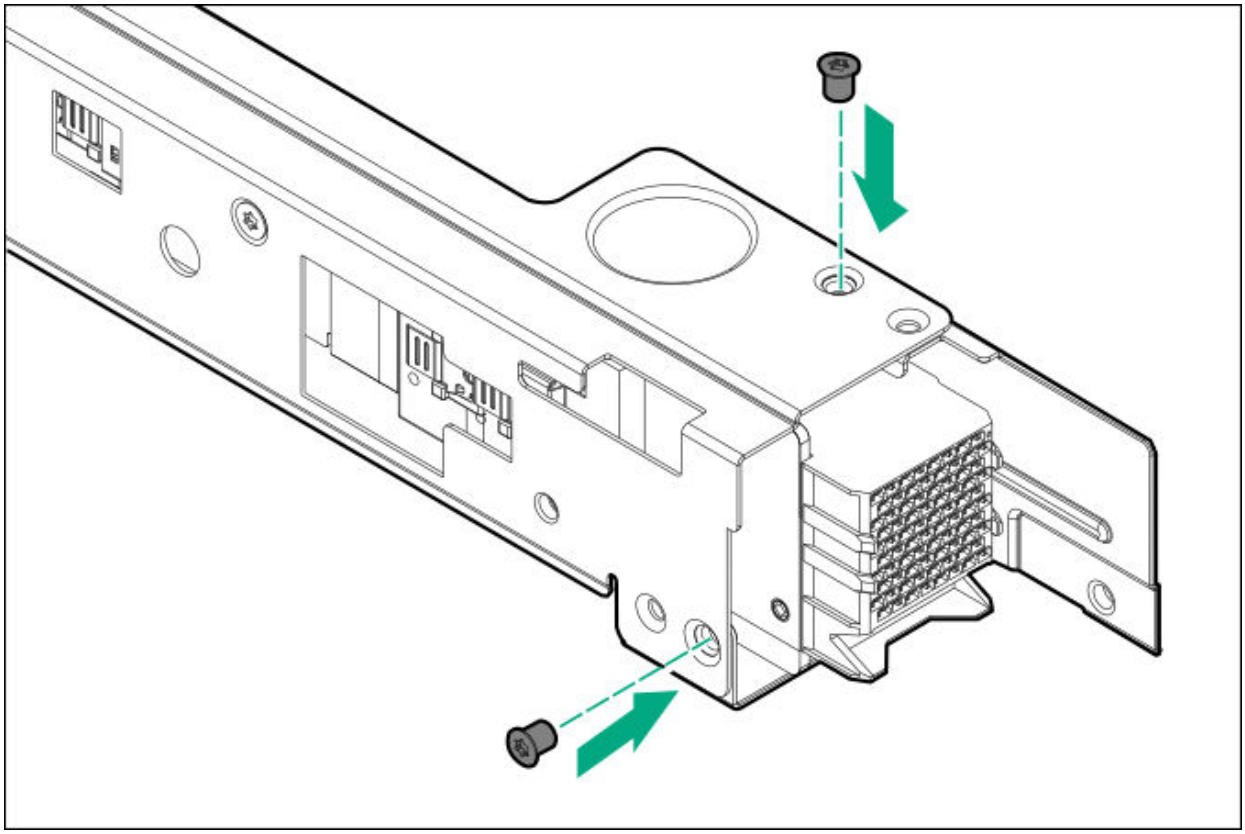

.2. If the onboard SATA cable or a Smart Array controller cable is attached to the riser, do the following:

a. Route the cable underneath the riser cutout (callout 1).

b. To ensure that the cable is not caught underneath the riser during the installation, position the cable away from the riser connector (callout 2).

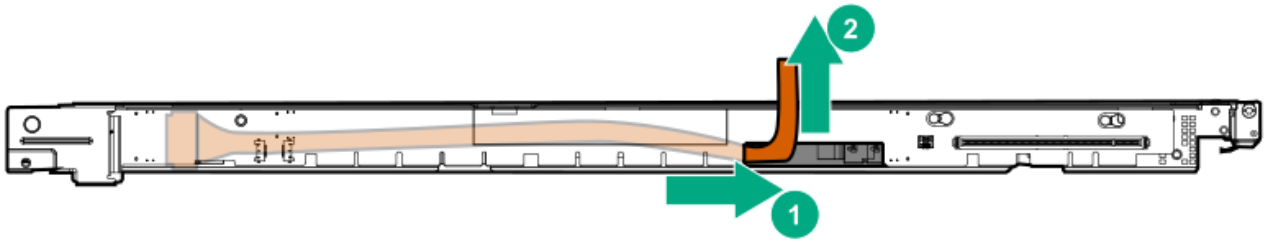

.3. If you are planning to install an expansion option in this riser, install it now:

- Expansion card
- Smart Array type-p controller

.4. Install the secondary riser:

a. Align the spools on the riser with the notches on the server tray (callout 1).

b. Carefully press the riser down on its system board connector (callout 2).

   Make sure that the riser board is firmly seated.

c. Install the riser screws (callout 3).

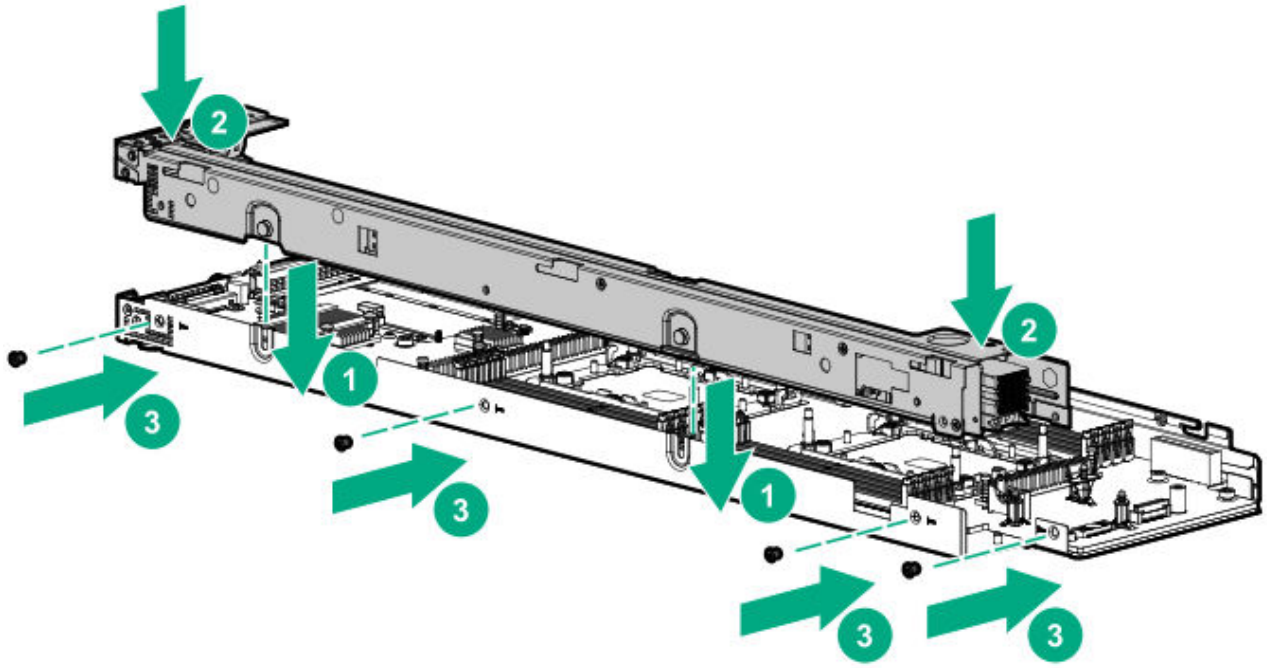

.5. Install the air baffle.

.6. Install the node cover.

.7. Install the server.

.8. Connect all peripheral cables to the server.

.9. Power up the server.

Results

The installation is complete.

Storage controller cable options

The server supports two types of storage controller cables:

- SATA controller cable—Required for SATA drive support through the embedded SATA controller chipset. This cable is required in both AHCI and Dynamic Smart Array RAID modes.
- SlimSAS controller cable—Required for Smart Array type-p controller installation.

Subtopics

Installing a storage controller cable

Installing a storage controller cable

Prerequisites

Before you perform this procedure, make sure that you have the following items available:

- T-10 Torx screwdriver
- T-15 Torx screwdriver

Procedure

1. Power down the server.
2. If installed, disconnect the tube set.
3. Disconnect all peripheral cables from the server.
4. Remove the server.
5. Place the server on a flat, level work surface.
6. Remove the node cover.
7. If installed, remove the air baffle.

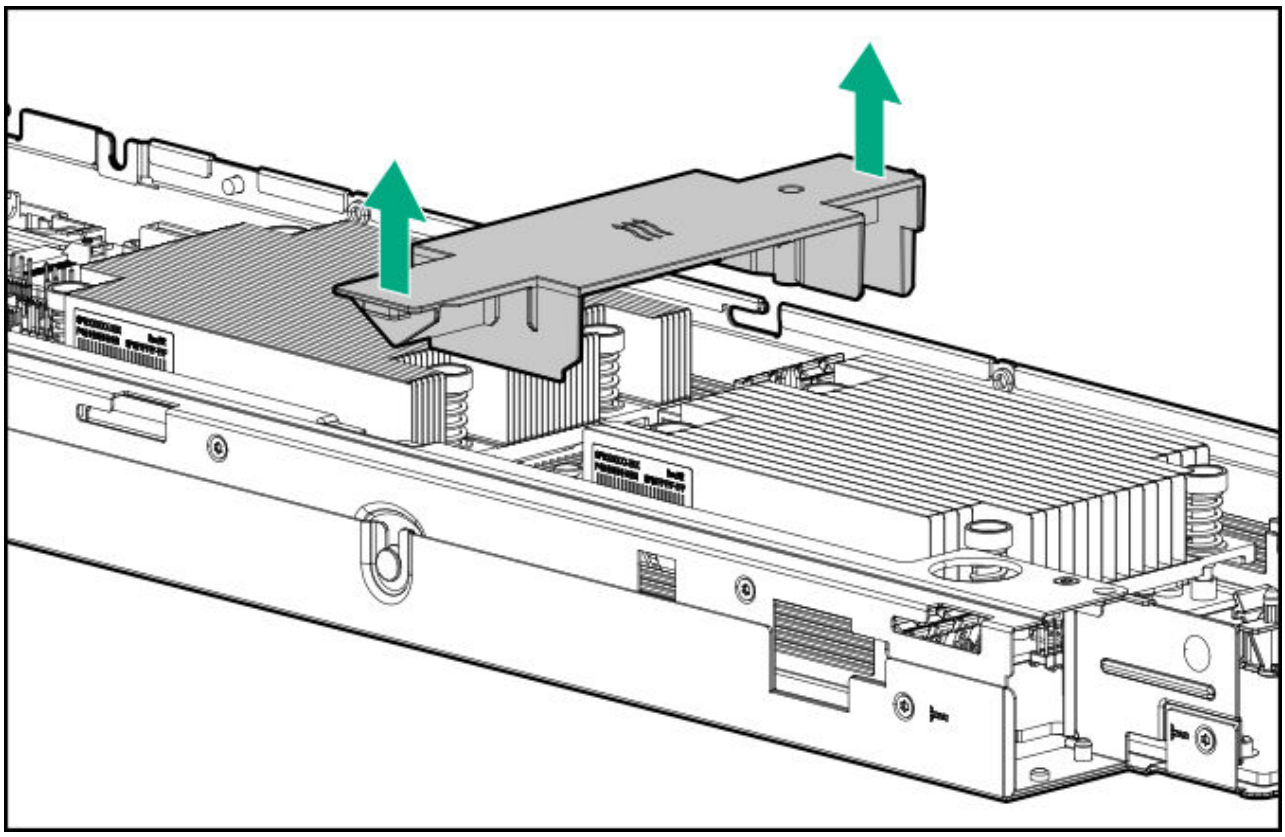

8. Remove the secondary riser.
9. If installed, remove the expansion card from the secondary riser.

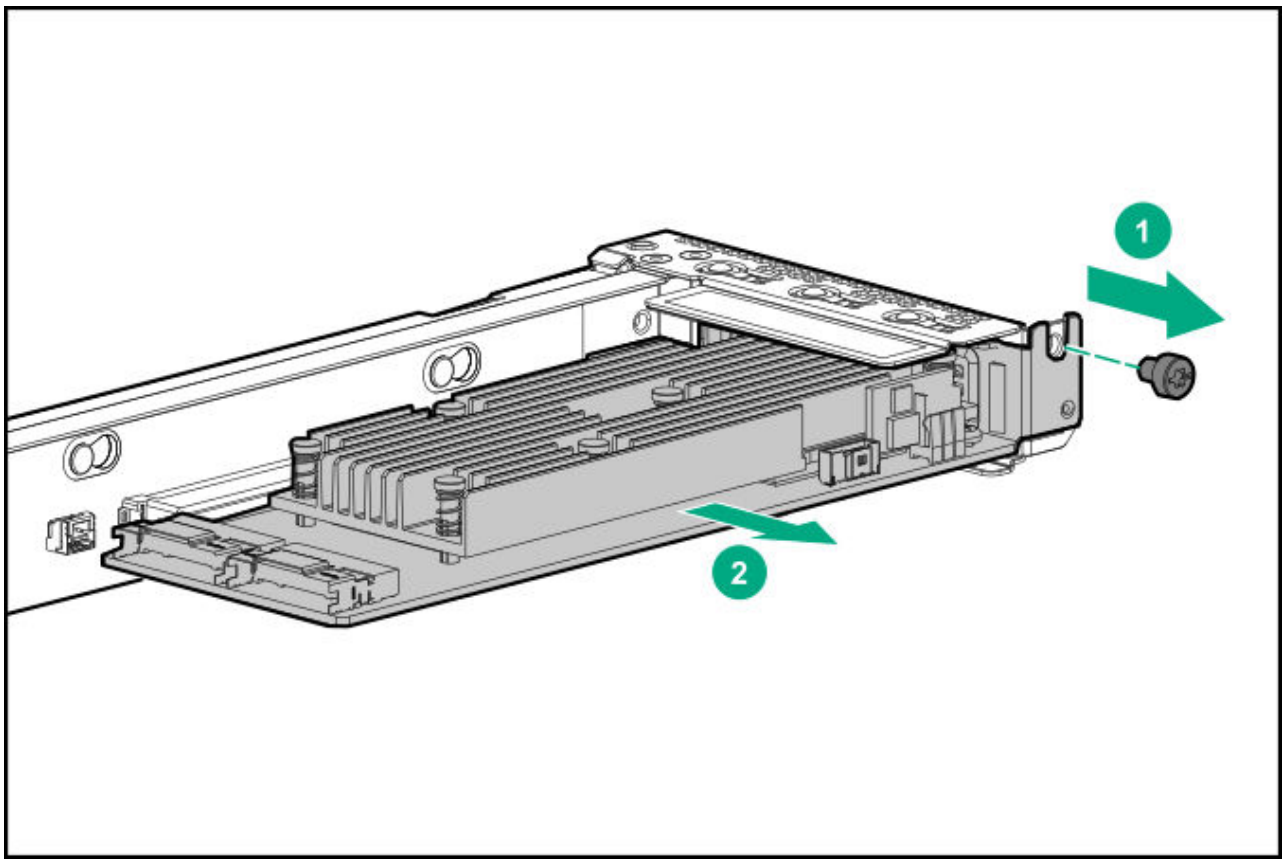

.0. Remove the interconnect receptacle bracket.

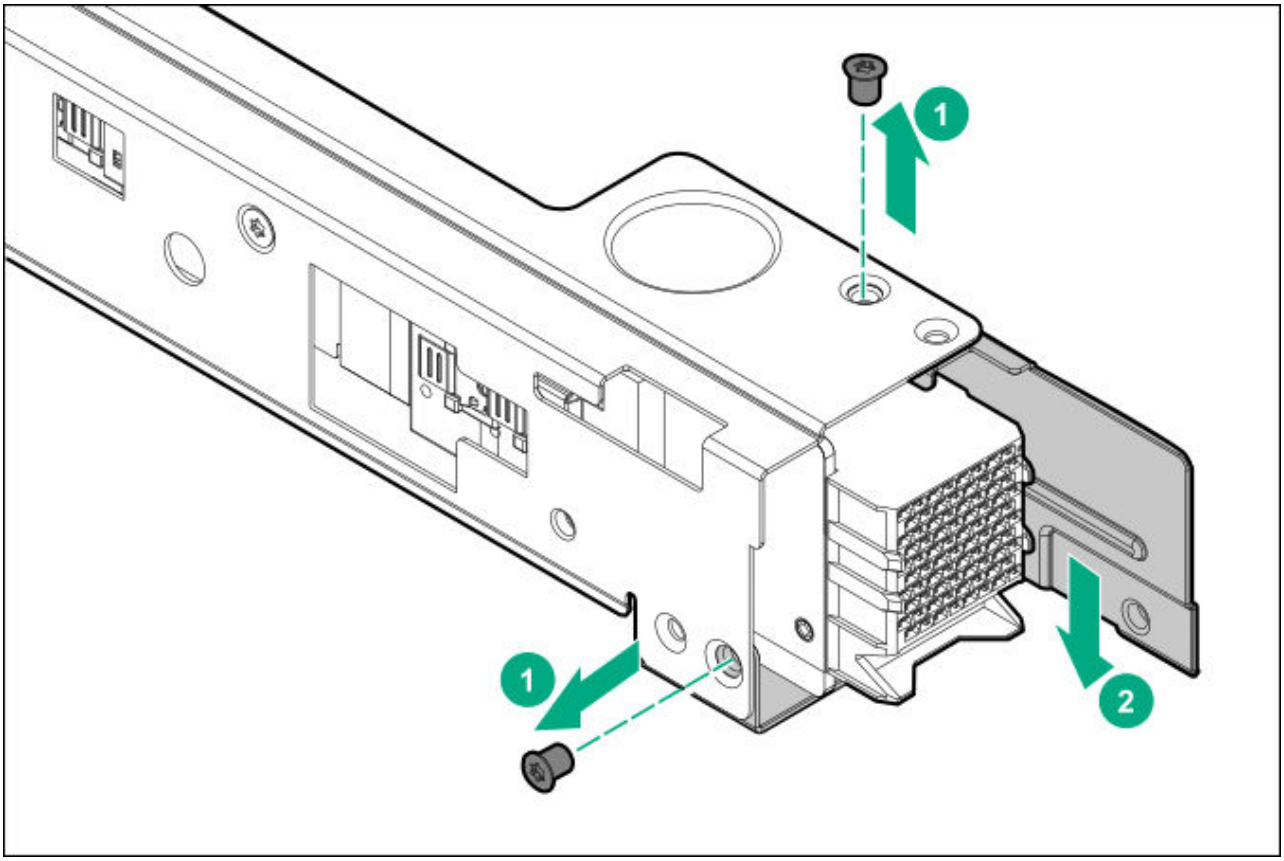

.1. Remove the riser board screws.

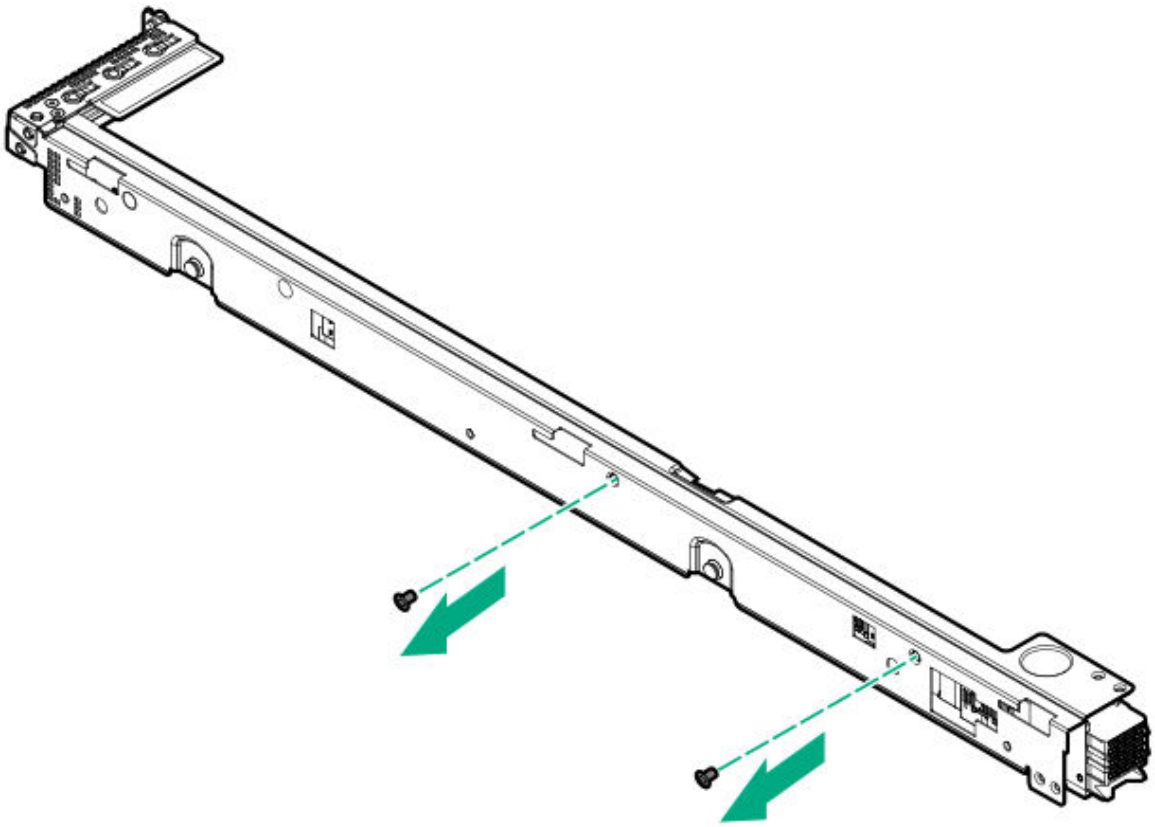

.2. Remove the riser board:

a. To release the board from the bracket spools, slide the board towards the direction of the interconnect receptacle.

b. Separate the board from the bracket.

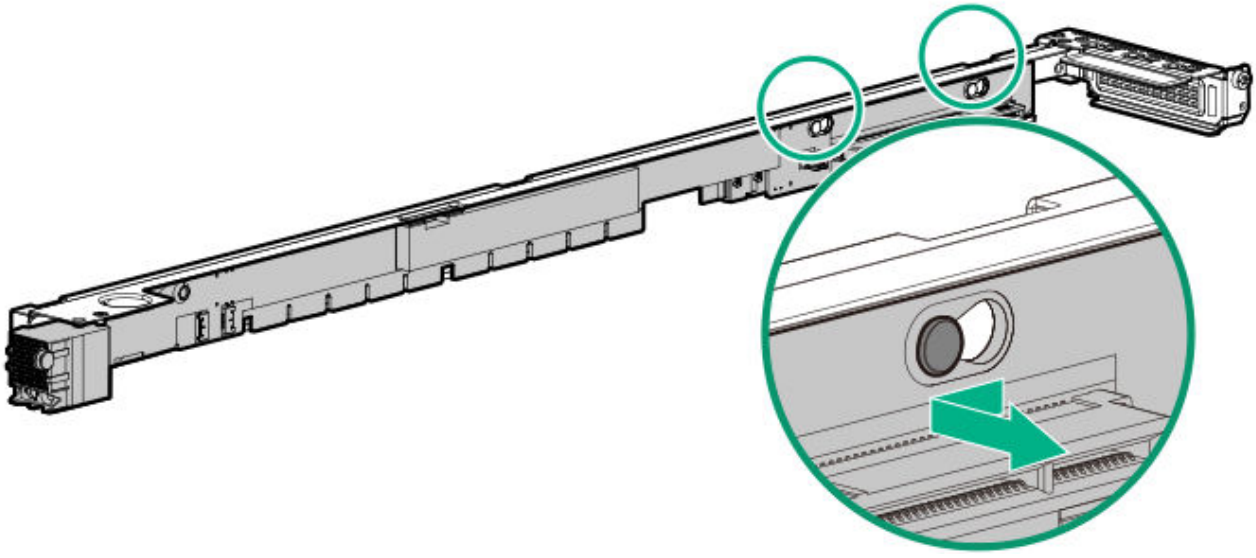

.3. Attach the controller cable to the riser board:

a. Connect the controller cable to the SlimSAS port.

b. Secure the controller cable with the clip.

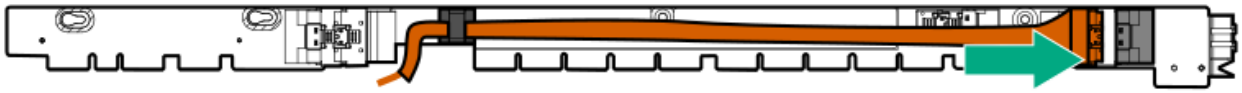

.4. Install the riser board:

a. Insert the bracket spools into the holes on the board.

b. Slide the board towards the direction of the slot blank.

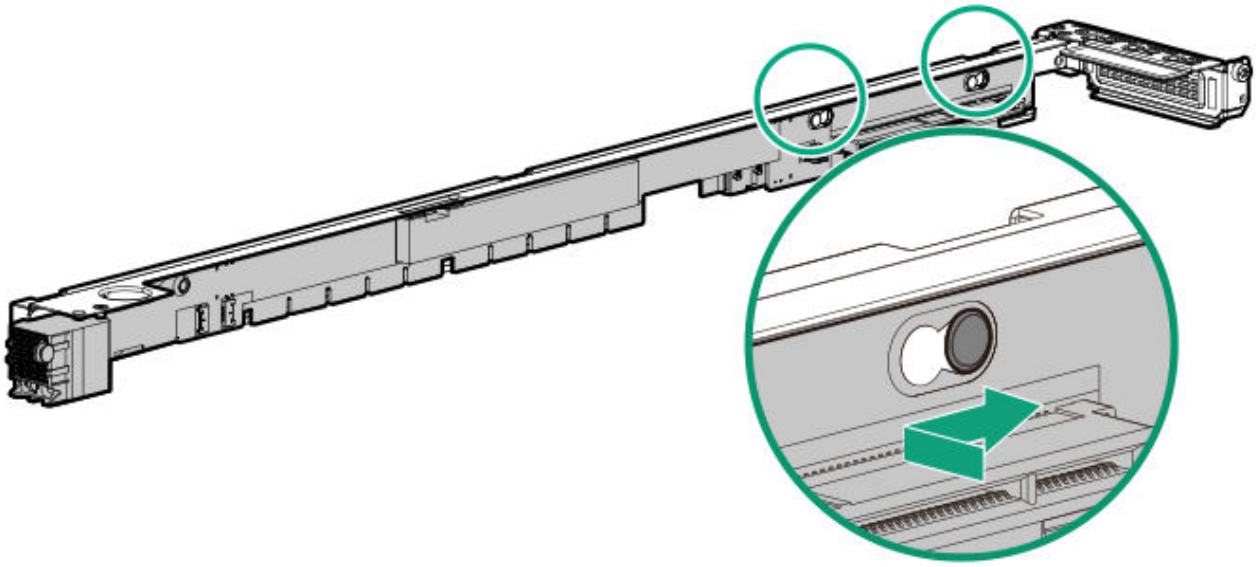

.5. Install the riser board screws.

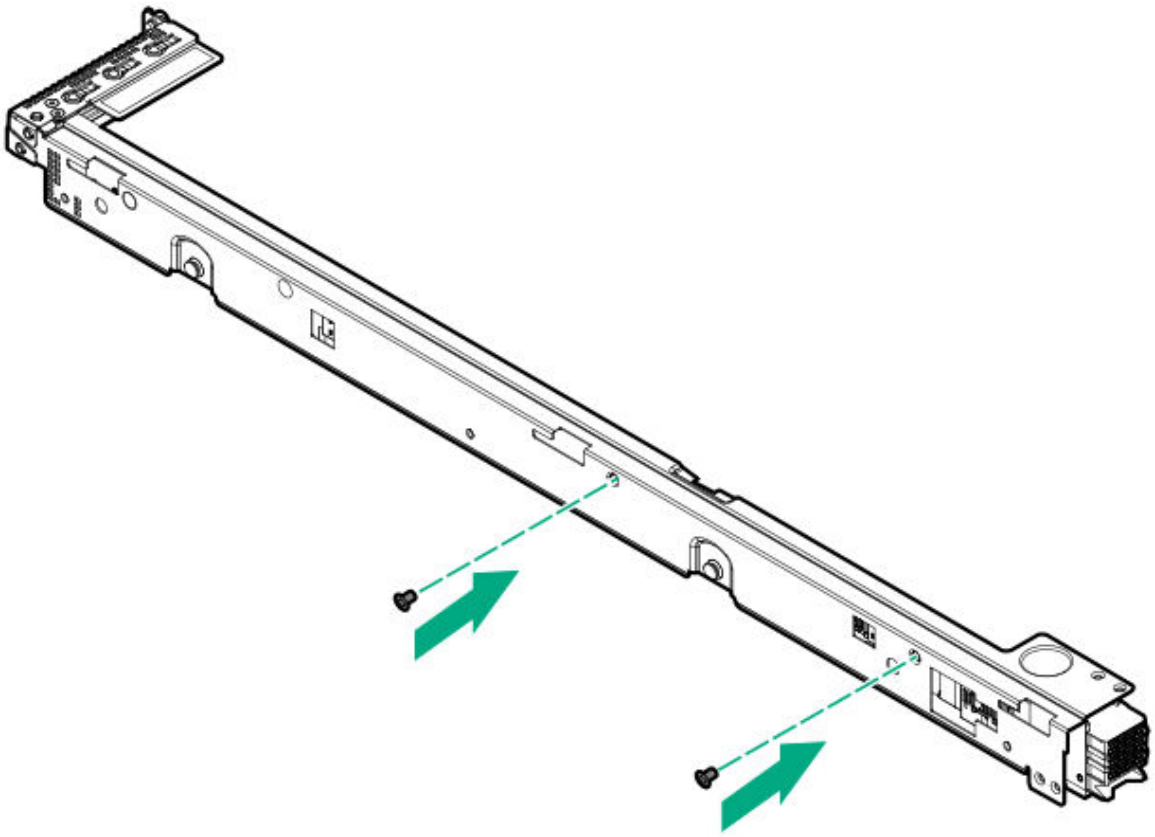

.6. Install the interconnect receptacle bracket:

a. Use the spools to position the bracket over the interconnect receptacle.

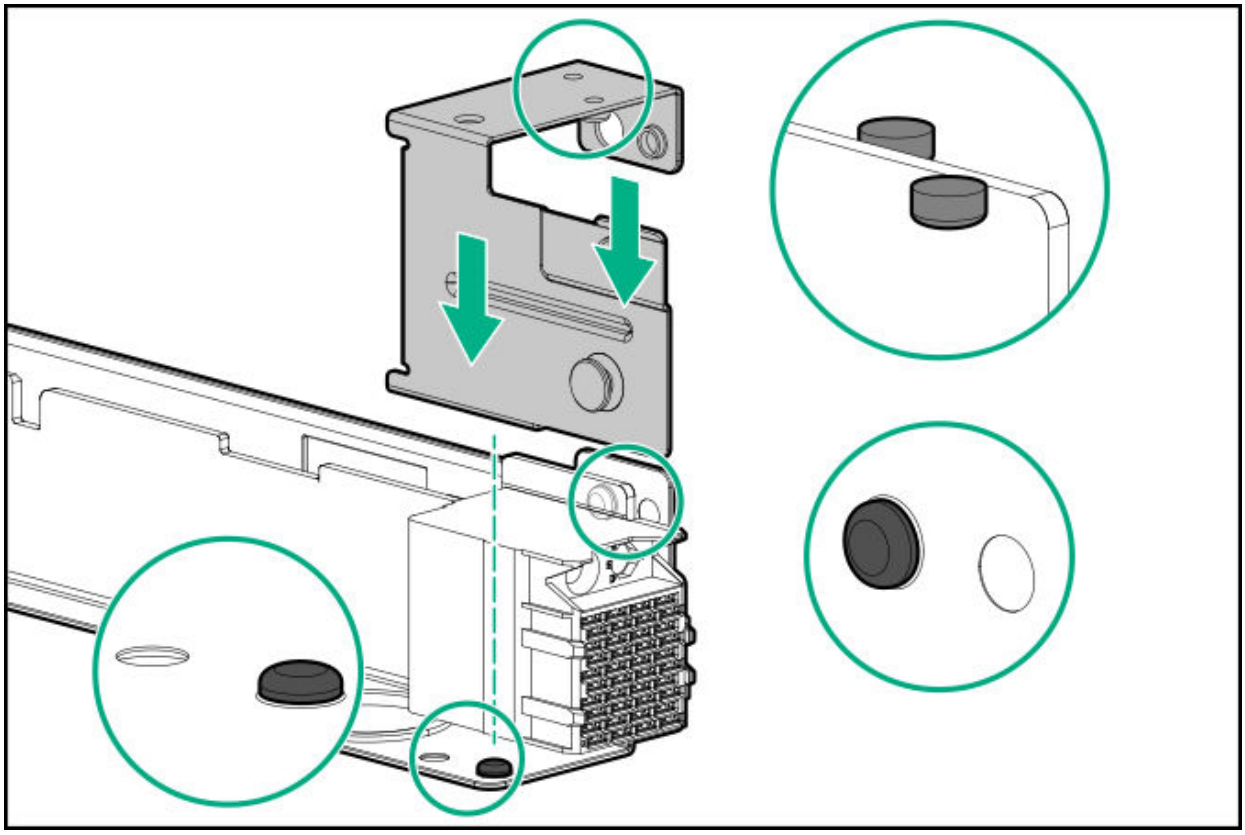

b. Install the receptacle bracket screws.

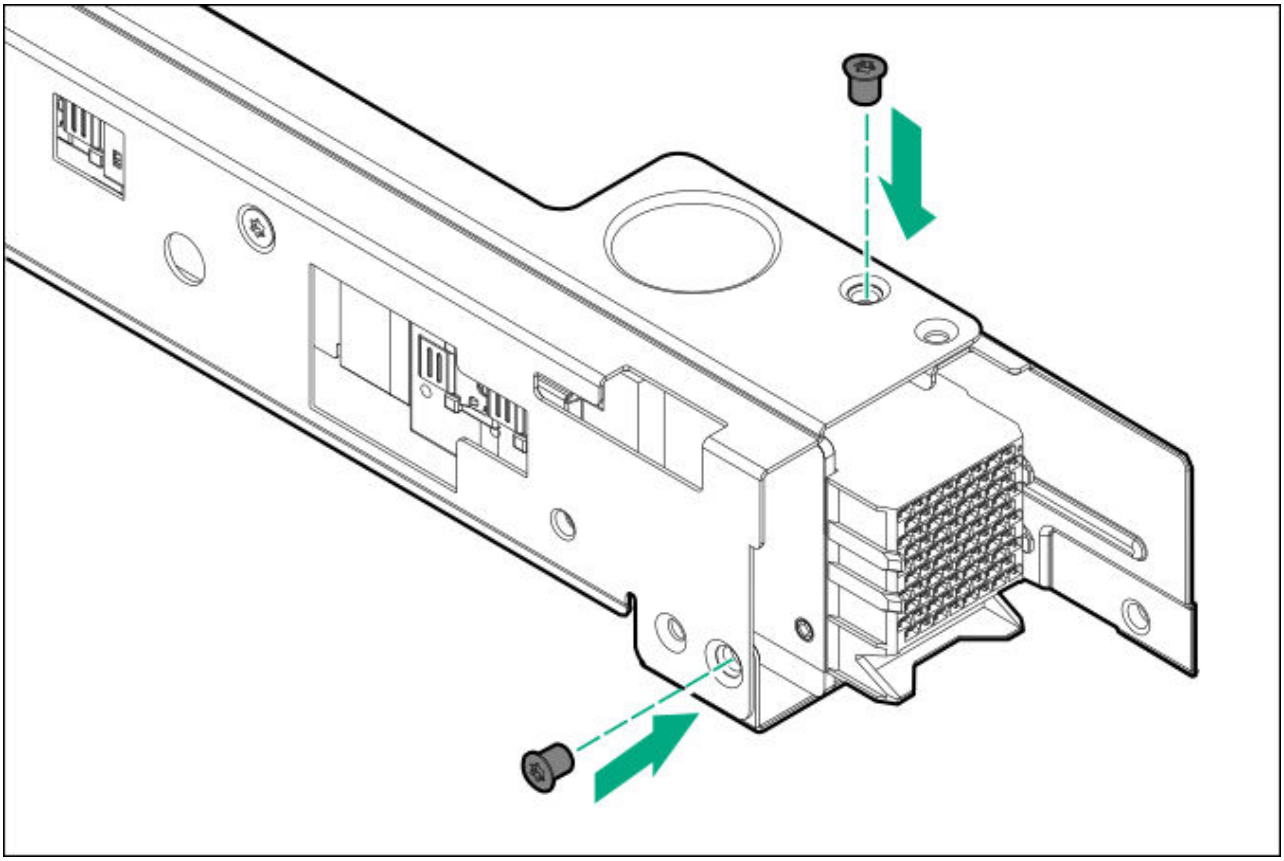

.7. If removed, install the expansion card in the secondary riser.

.8. Install the secondary riser.

.9. Do one of the following:

- Connect the controller cable to the onboard SATA controller port.
- Connect the controller cable to the Smart Array type-p controller ports.

!0. Install the node cover.

!1. Install the server.

!2. Connect all peripheral cables to the server.

!3. If removed, connect the tube set.

!4. Power up the server.

Results

The installation is complete.

Storage controller options

To support SAS and SATA drives, install an HPE Smart Array type-p controller in the secondary riser. Use the HPE Smart Storage Administrator (SSA) to manage the controller functions from a single, intuitive interface.

Subtopics

Installing a Smart Array type-p controller in the secondary riser
Configuring an HPE Smart Array Gen10 controller

Installing a Smart Array type-p controller in the secondary riser

Prerequisites

- Determine if the drive configuration you plan to support with the new Smart Array controller requires a specific system operating temperature. For more information, see the HPE website (**https://www.hpe.com/support/xl225ngen10plus-thermal**).
- If you are installing a Smart Array P-class Gen10 controller, an energy pack option is required to enable the HPE Smart Array SR SmartCache or HPE Smart Array MR CacheCade.

  SmartCache and CacheCade enable solid-state drives to be used as caching devices for hard drive media. These features accelerate access to frequently used data by caching hot data from the hard drives onto the solid-state drives.

  For instructions on installing the energy pack, see the chassis user guide on the HPE website (**https://www.hpe.com/info/apollo2000gen10plus-docs**).
- Before you perform this procedure, perform the following steps:

  1. Back up data on the system.
  2. Close all applications.
  3. Update the server firmware if it is not the latest revision.
  4. Do one of the following:
     - If the new Smart Array is the new boot device, install the device drivers.
     - If the new Smart Array is not the new boot device, go to the next step.

5. Ensure that users are logged off and that all tasks are completed on the server.

> **CAUTION:** In systems that use external data storage, be sure that the server is the first unit to be powered down and the last to be powered back up. Taking this precaution ensures that the system does not erroneously mark the drives as failed when the server is powered up.

- Before you perform this procedure, make sure that you have the following items available:
  - T-10 Torx screwdriver
  - T-15 Torx screwdriver

Procedure

1. Power down the server.
2. If installed, disconnect the tube set.
3. Disconnect all peripheral cables from the server.
4. Remove the server.
5. Place the server on a flat, level work surface.
6. Remove the node cover.
7. If installed, remove the air baffle.

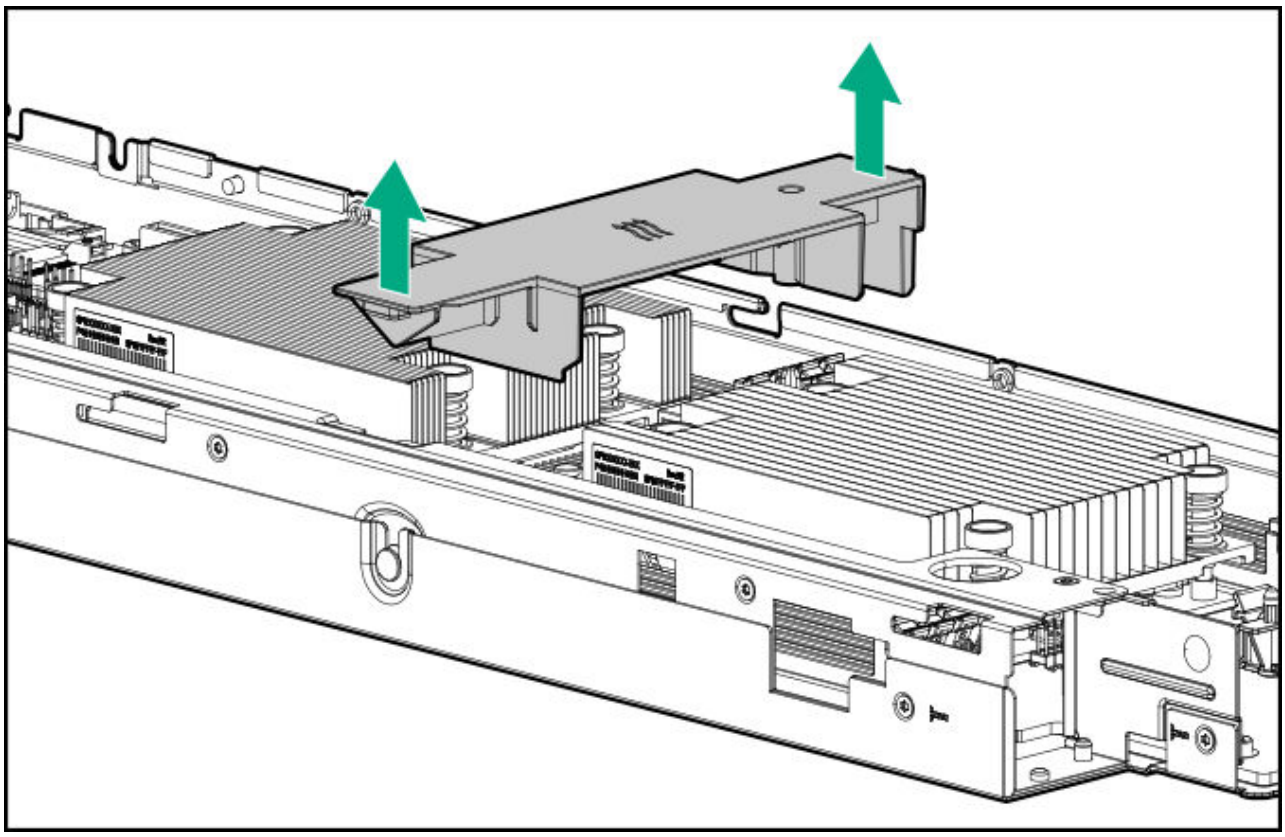

8. Remove the secondary riser.
9. If the Smart Array controller SAS cable is not yet connected to the secondary riser board, install it now.
.0. Remove the blank screw (callout 1), and then pull out the riser slot blank (callout 2).

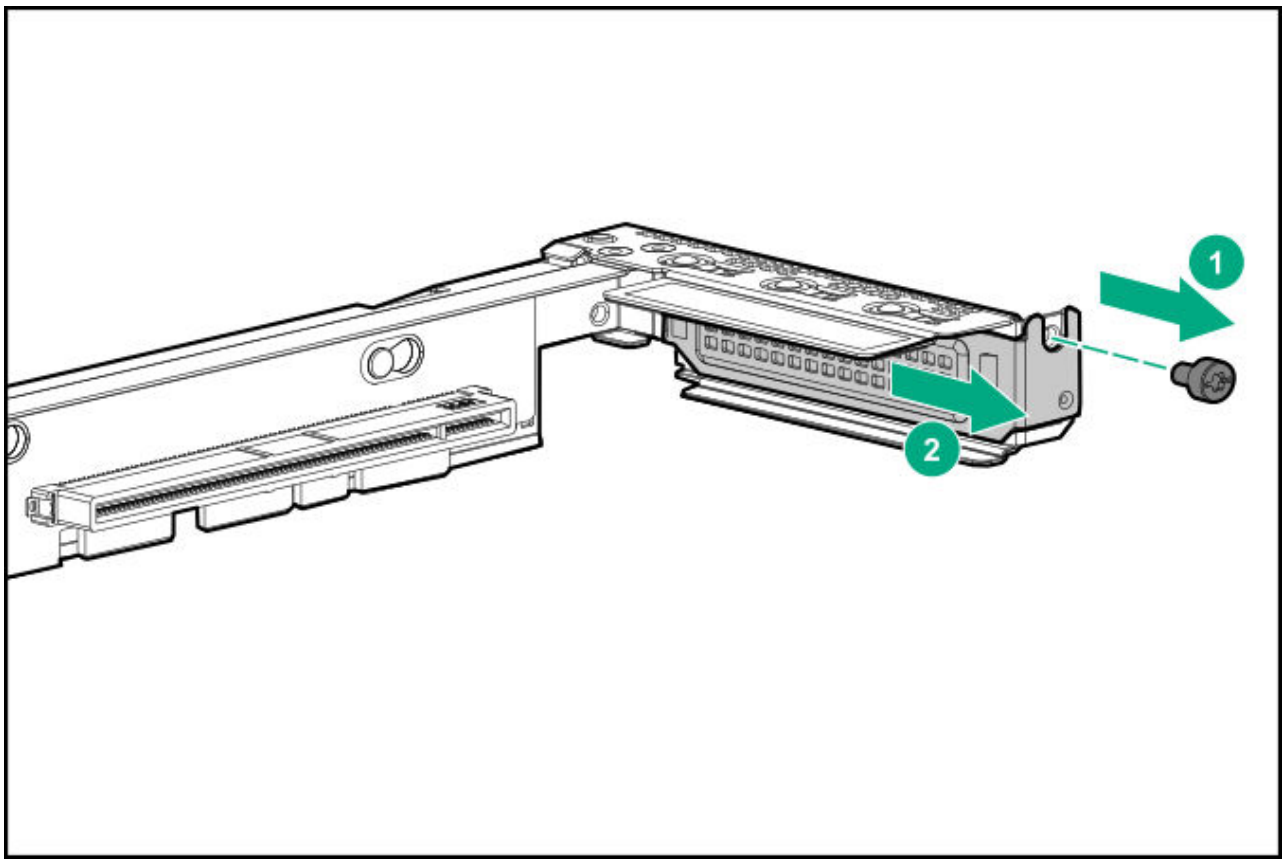

.1. If installed, remove the full-height bracket from the expansion card.

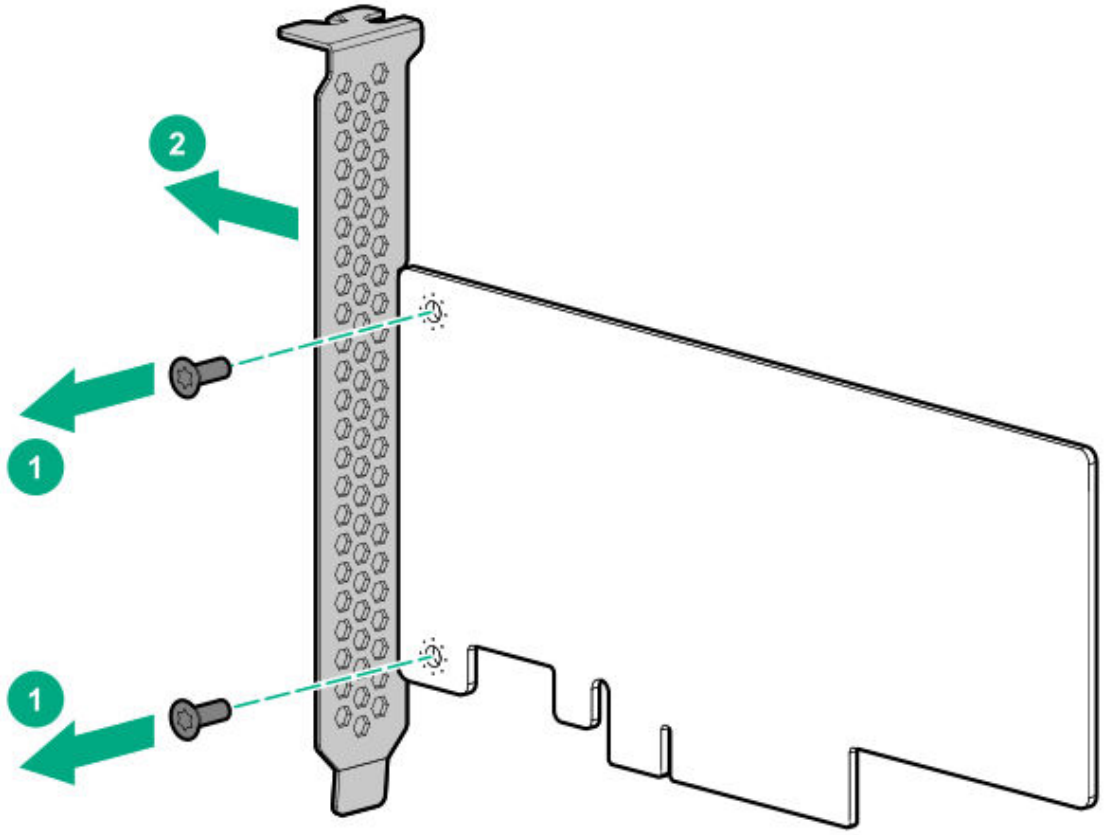

.2. Install the low-profile bracket on the expansion card.

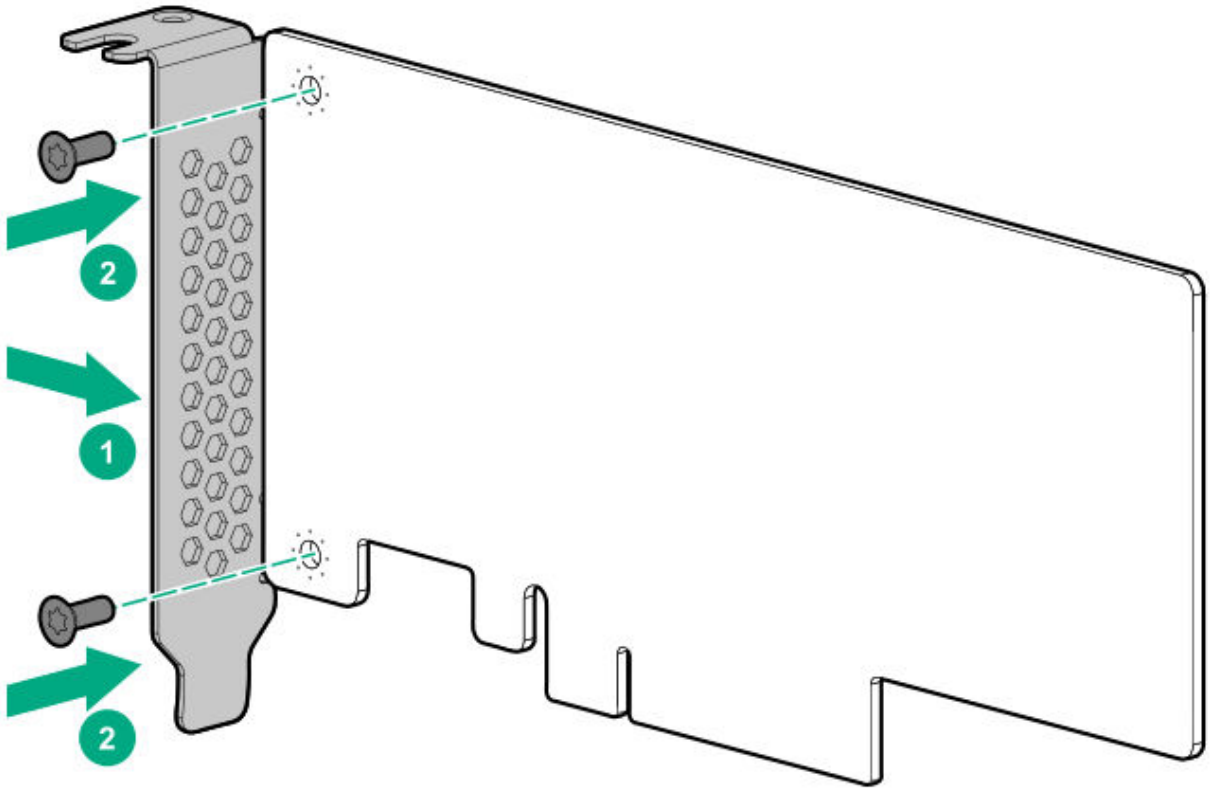

.3. Install the storage controller:

a. Insert the board connector in the riser slot (callout 1).

Make sure that the board is seated firmly in the slot.

b. Install the bracket screw (callout 2).

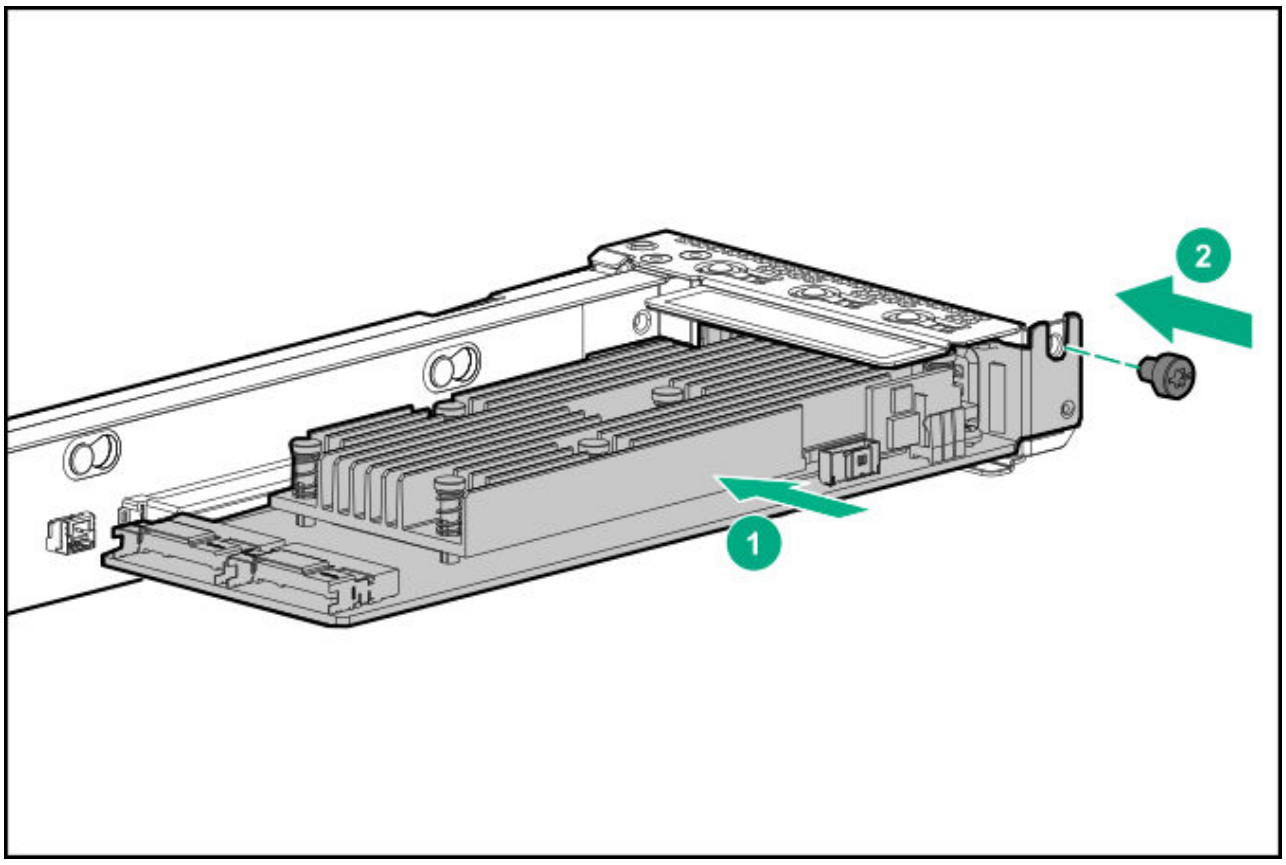

.4. Connect the following cables:

- Smart Array controller SlimSAS cable
- If you are installing a Smart Array P-class Gen10 controller, connect the storage controller backup power cable.

.5. Install the secondary riser.

.6. Install the air baffle.

.7. Install the node cover.

.8. Install the server.

.9. Connect all peripheral cables to the server.

!0. If removed, connect the tube set.

!1. Power up the server.

!2. Configure the HPE Smart Array Gen10 controller.

Results

The installation is complete.

Configuring an HPE Smart Array Gen10 controller

Procedure

1. Power up the server.
2. If you are running the server in UEFI Boot Mode, select the boot options.
3. Update the drive firmware if it is not the latest revision.
4. (Optional) If running the server in Legacy Boot Mode, set the controller as the boot controller.
5. (Optional) If running the server in Legacy Boot Mode, change the controller boot order.
6. If the new controller is not the new boot device, install the device drivers.
7. If the controller firmware is not the latest version, use SPP to update it.
8. Use UEFI System Utilities or HPE Smart Storage Administrator (HPE SSA) to create arrays and logical drives.

Results

See the following resources for more information:

- SPP – See the product documentation in the information library:

  https://www.hpe.com/info/spp/docs

- UEFI System Utilities or HPE Smart Storage Administrator – See the HPE Smart Array SR Gen10 Configuration Guide in the information library:

  https://www.hpe.com/info/smartstorage-docs

Expansion card options

The server supports PCIe riser options for installing full-height/half-length or half-height/half-length PCIe expansion / add-in (AIC) cards such as::

- HPE type-p storage controller
- Ethernet adapter
- HDR InfiniBand adapter

- Fibre channel host bus adapter (FC HBA)

For more information on the expansion options validated for this system, see the system QuickSpecs on the Hewlett Packard Enterprise website:

https://www.hpe.com/servers/apollo2000

Subtopics

PCIe expansion option population rules
Installing an expansion card in the primary riser
Installing an expansion card in the secondary riser

PCIe expansion option population rules

To maintain optimum system cooling, follow these rules when populating the PCIe riser slots:

- Determine if the expansion option requires a specific system operating temperature. For more information, see the HPE website (**https://www.hpe.com/support/xl225ngen10plus-thermal**).
- When installing only one expansion card, always install it in the secondary riser slot 2.
- When installing two expansion cards, always install the first expansion card in the secondary riser slot 2.

  Follow this priority sequence:
  1. HPE Smart Array Xxxxi-p controller
  2. HPE network adapter with QSFP28/QSFP56 transceiver, HPE EDR/HDR InfiniBand adapter
  3. HPE network adapter or FC HBA with SFP+/SFP28/QSFP transceivers, HPE QDR/FDR InfiniBand adapter
  4. HPE Smart Array Xxxxe-p controller

Installing an expansion card in the primary riser

Prerequisites

- Observe the PCIe expansion option population rules.
- Before you perform this procedure, make sure that you have the following items available:
  - T-10 Torx screwdriver

- T-15 Torx screwdriver

Procedure

1. Power down the server.
2. If installed, disconnect the tube set.
3. Disconnect all peripheral cables from the server.
4. Remove the server.
5. Place the server on a flat, level work surface.
6. Remove the node cover.
7. Remove the primary riser.
8. Remove the riser slot blank:
   a. Remove the retainer bracket screw (callout 1).
   b. Remove the retainer bracket (callout 2).
   c. Pull out the slot blank (callout 3).

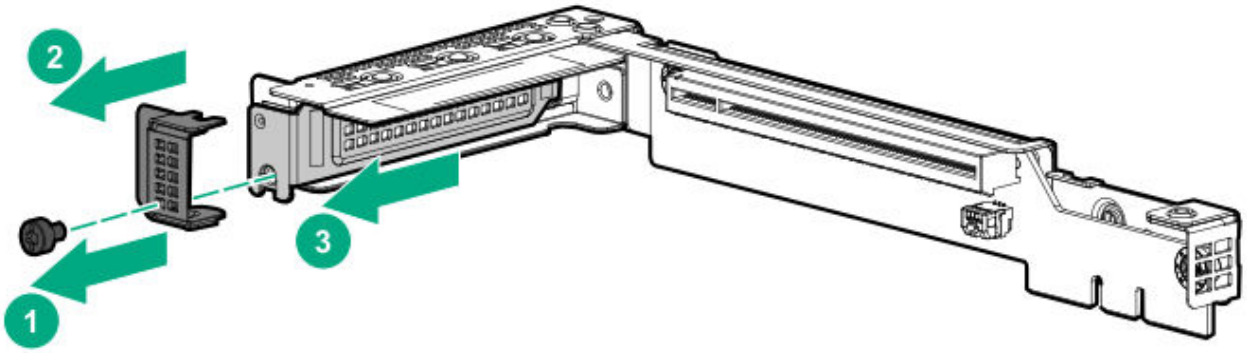

9. If installed, remove the full-height bracket from the expansion card.

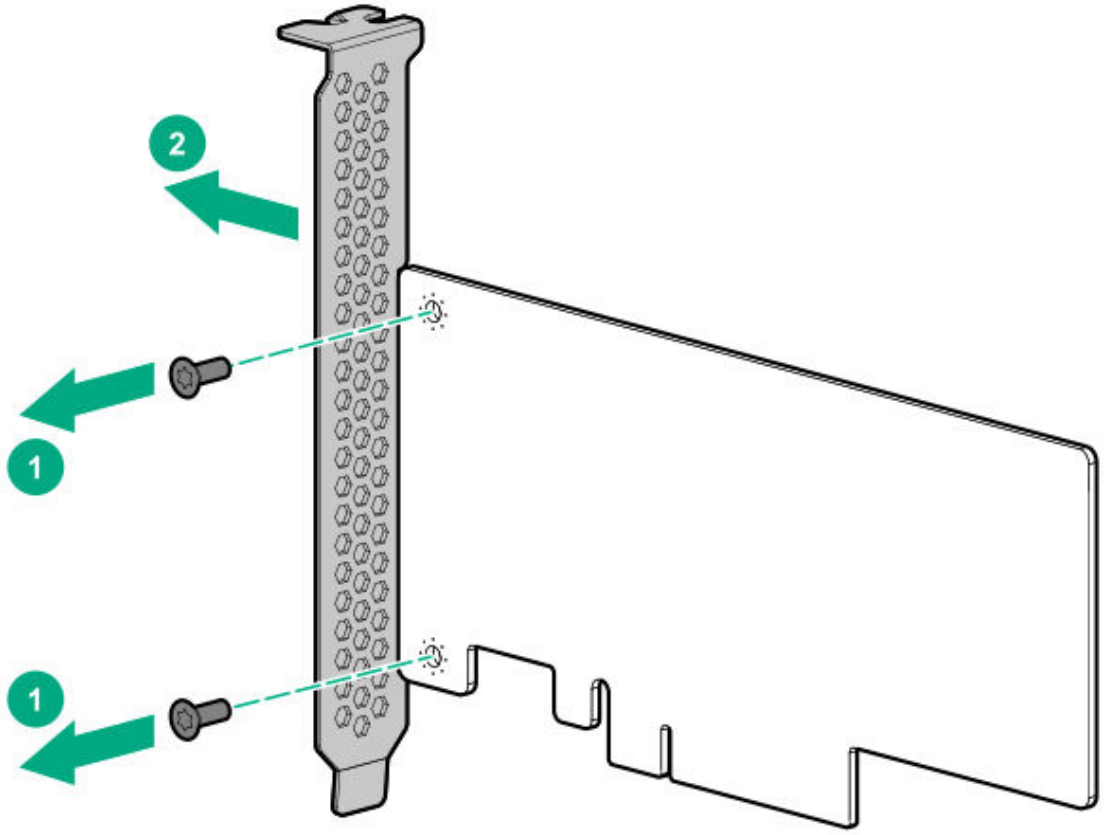

.0. Install the low-profile bracket on the expansion card.

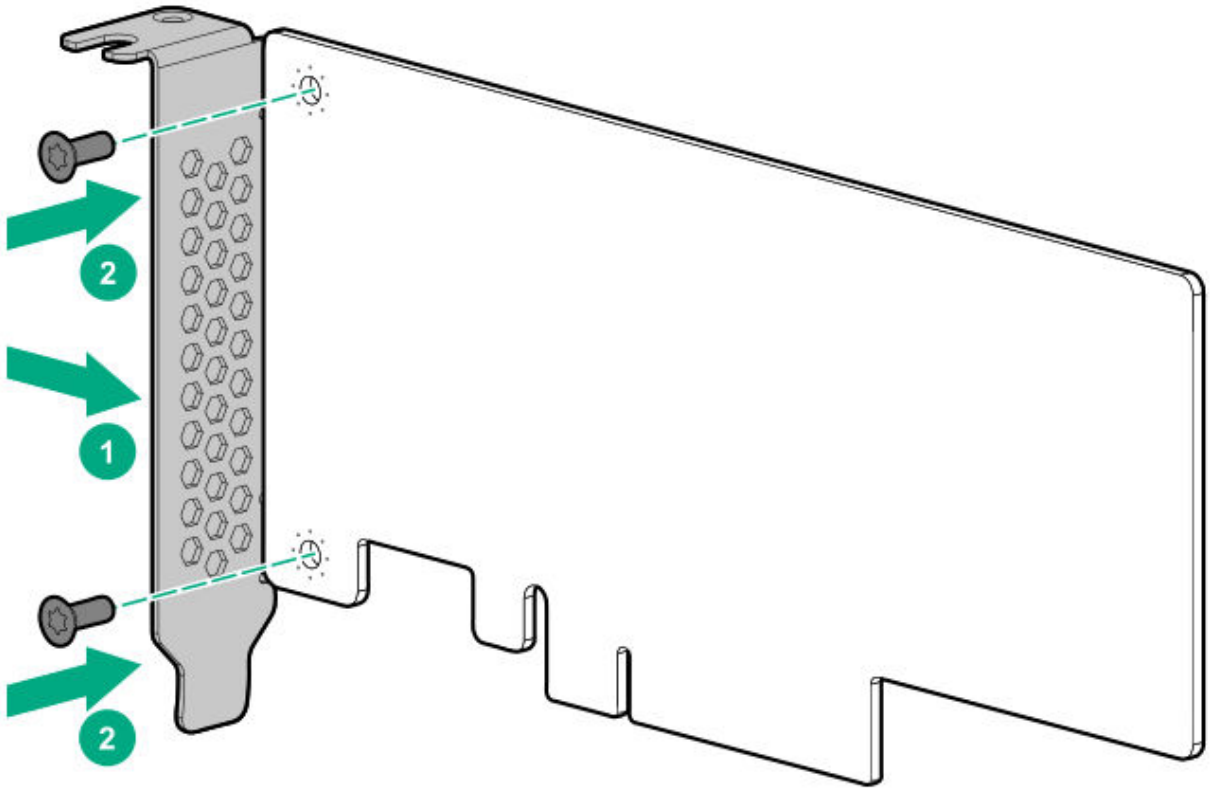

.1. Make sure that any switches or jumpers on the expansion card are set properly.

For more information, see the documentation that ships with the option.

.2. Install the expansion card:

a. Insert the card connector in the riser slot (callout 1).

Make sure that the card is seated firmly in the slot.

b. Install the retainer bracket (callout 2).

c. Install the bracket screw (callout 3).

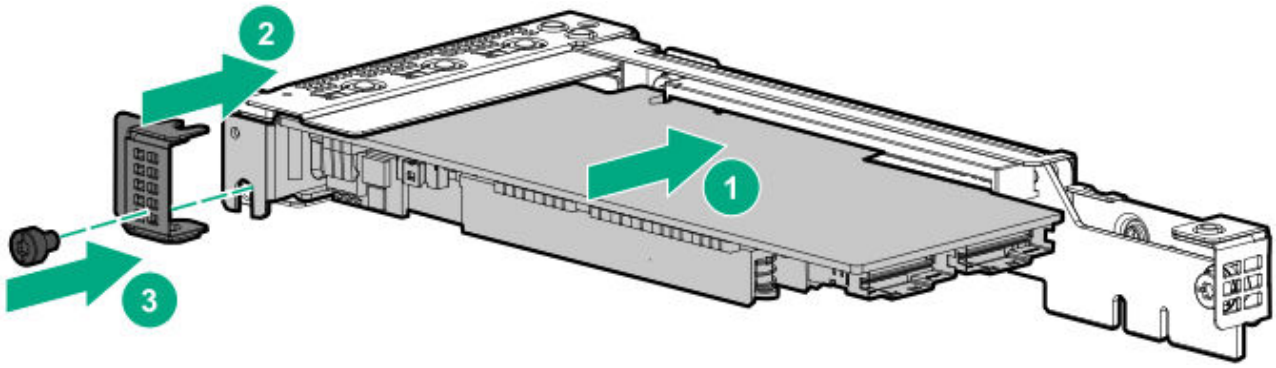

3. Install the primary riser.
4. Connect all necessary internal cabling to the expansion card.

   For more information on these cabling requirements, see the documentation that ships with the option.
5. Install the node cover.
6. Install the server.
7. Connect all peripheral cables to the server.
8. If removed, connect the tube set.
9. Power up the server.

Results

The installation is complete.

Installing an expansion card in the secondary riser

Prerequisites

- Observe the PCIe expansion option population rules.
- Before you perform this procedure, make sure that you have the following items available:
  - T-10 Torx screwdriver
  - T-15 Torx screwdriver

About this task

> **IMPORTANT:**
> The 8 GT/s transfer rate in PCIe Gen3 is doubled in PCIe Gen4 to 16 GT/s. However, PCIe Gen4 devices installed in the P2 secondary riser slot will only operate in PCIe Gen3 speed.

Procedure

1. Power down the server.
2. If installed, disconnect the tube set.

3. Disconnect all peripheral cables from the server.
4. Remove the server.
5. Place the server on a flat, level work surface.
6. Remove the node cover.
7. If installed, remove the air baffle.

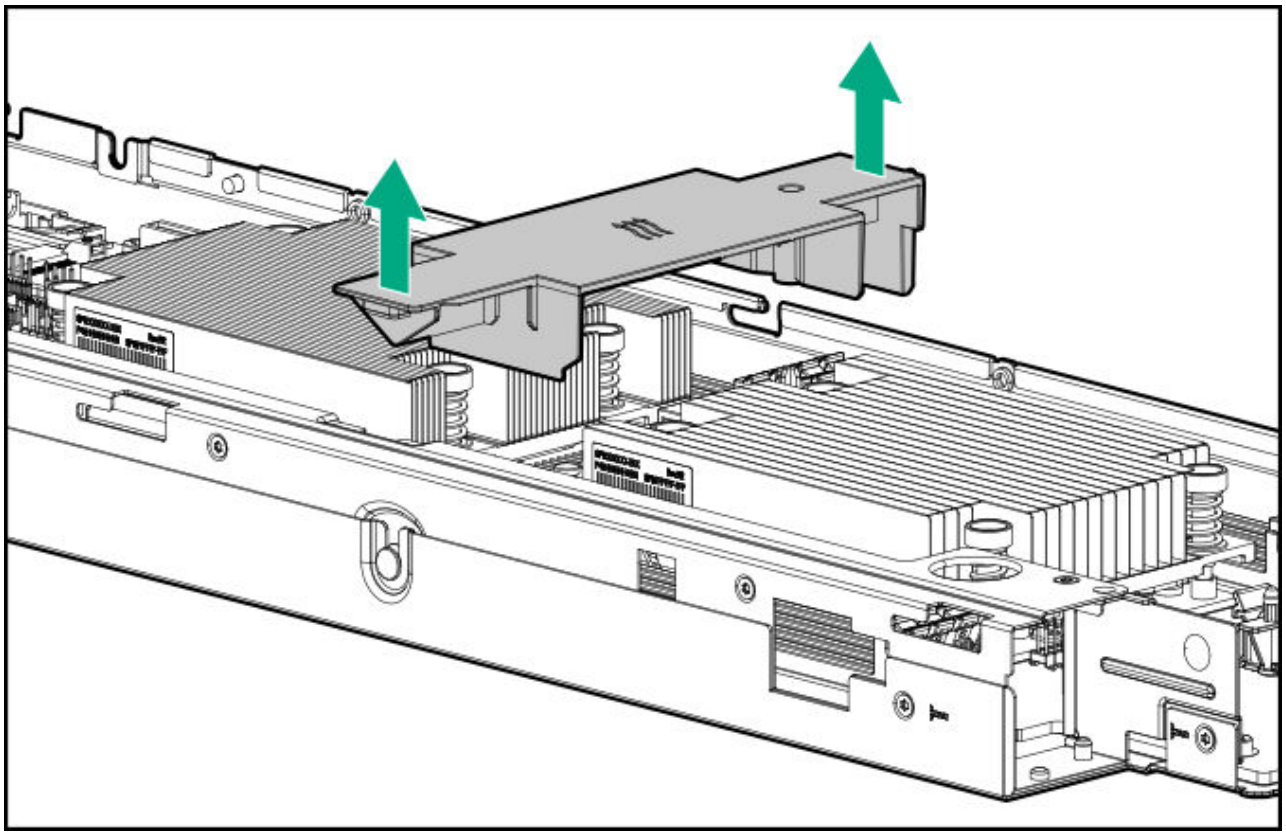

8. Remove the secondary riser.
9. If you are installing a Smart Array controller cable and the SAS cable is not yet connected to the secondary riser board, install it now.
10. Remove the blank screw (callout 1), and then pull out the riser slot blank (callout 2).

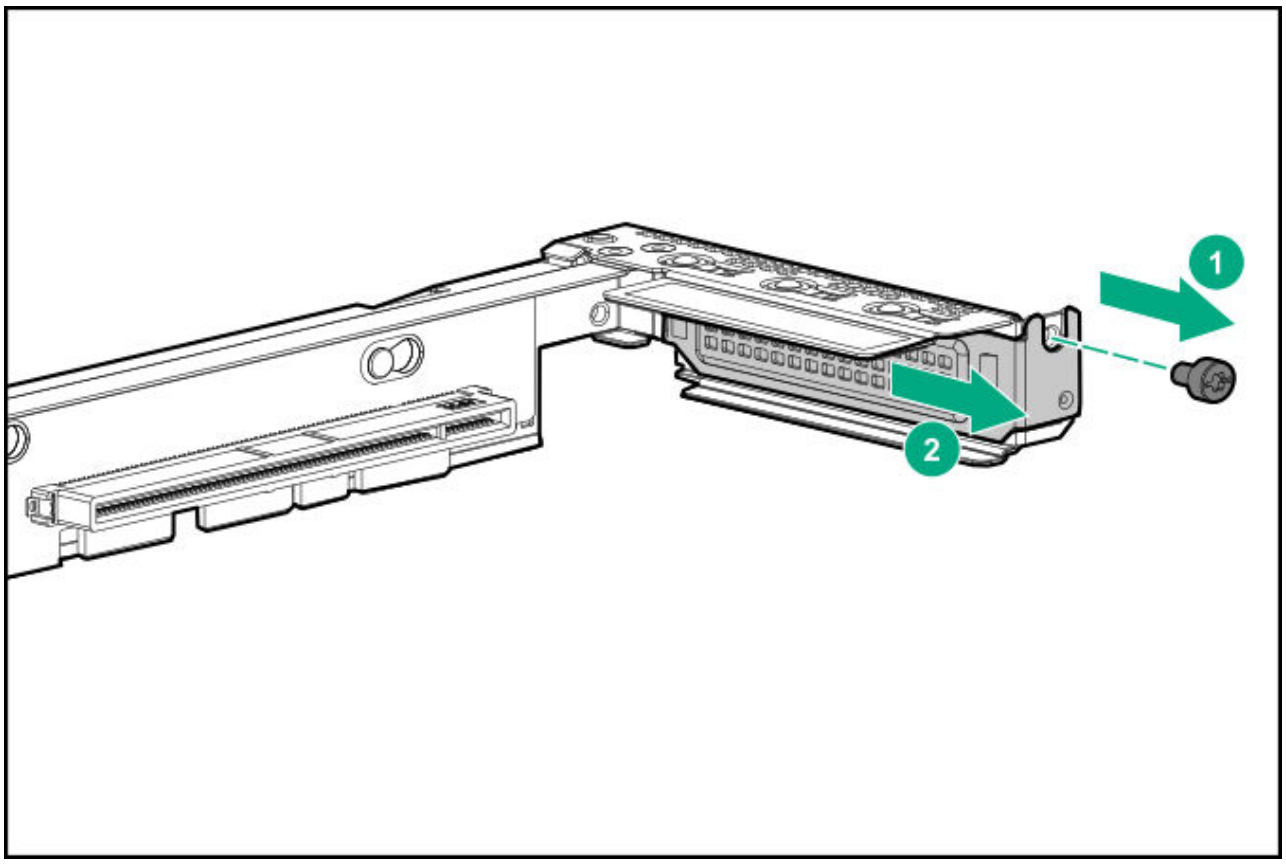

.1. If installed, remove the full-height bracket from the expansion card.

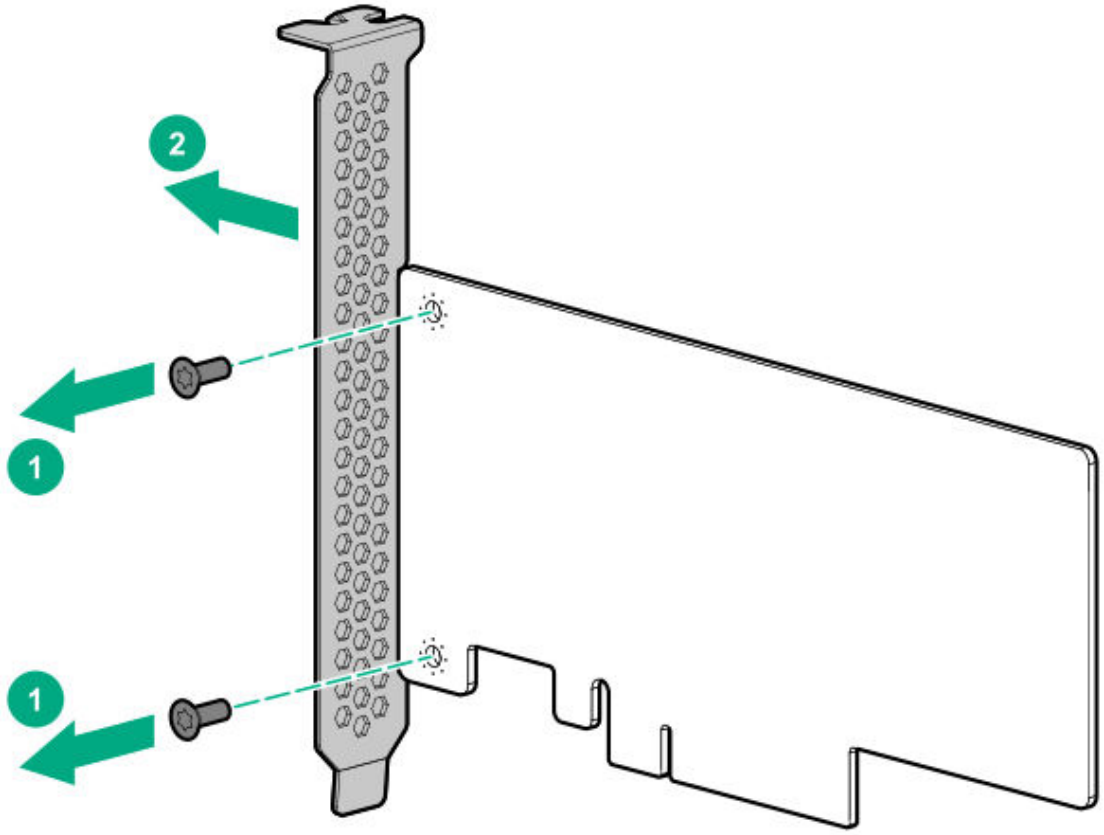

.2. Install the low-profile bracket on the expansion card.

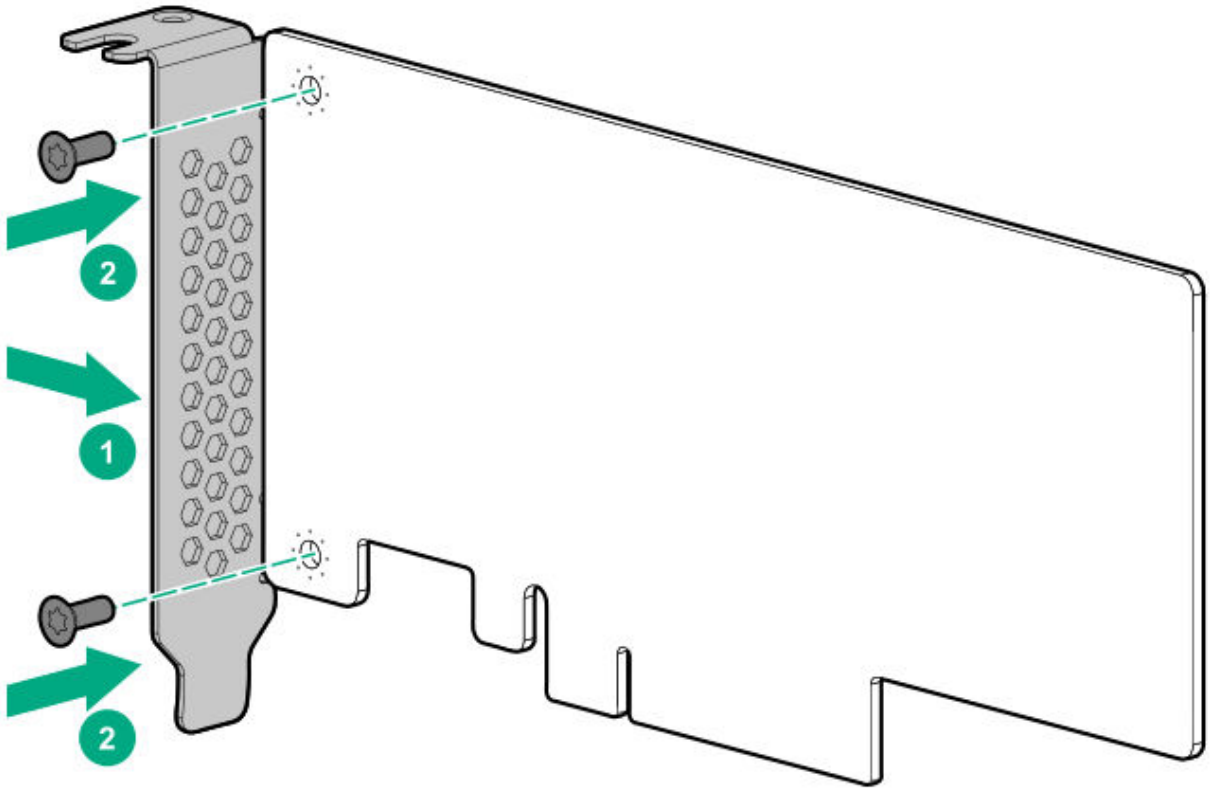

.3. Make sure that any switches or jumpers on the expansion card are set properly.

For more information, see the documentation that ships with the option.

.4. Install the expansion card:

a. Insert the card connector in the riser slot (callout 1).

Make sure that the card is seated firmly in the slot.

b. Install the bracket screw (callout 2).

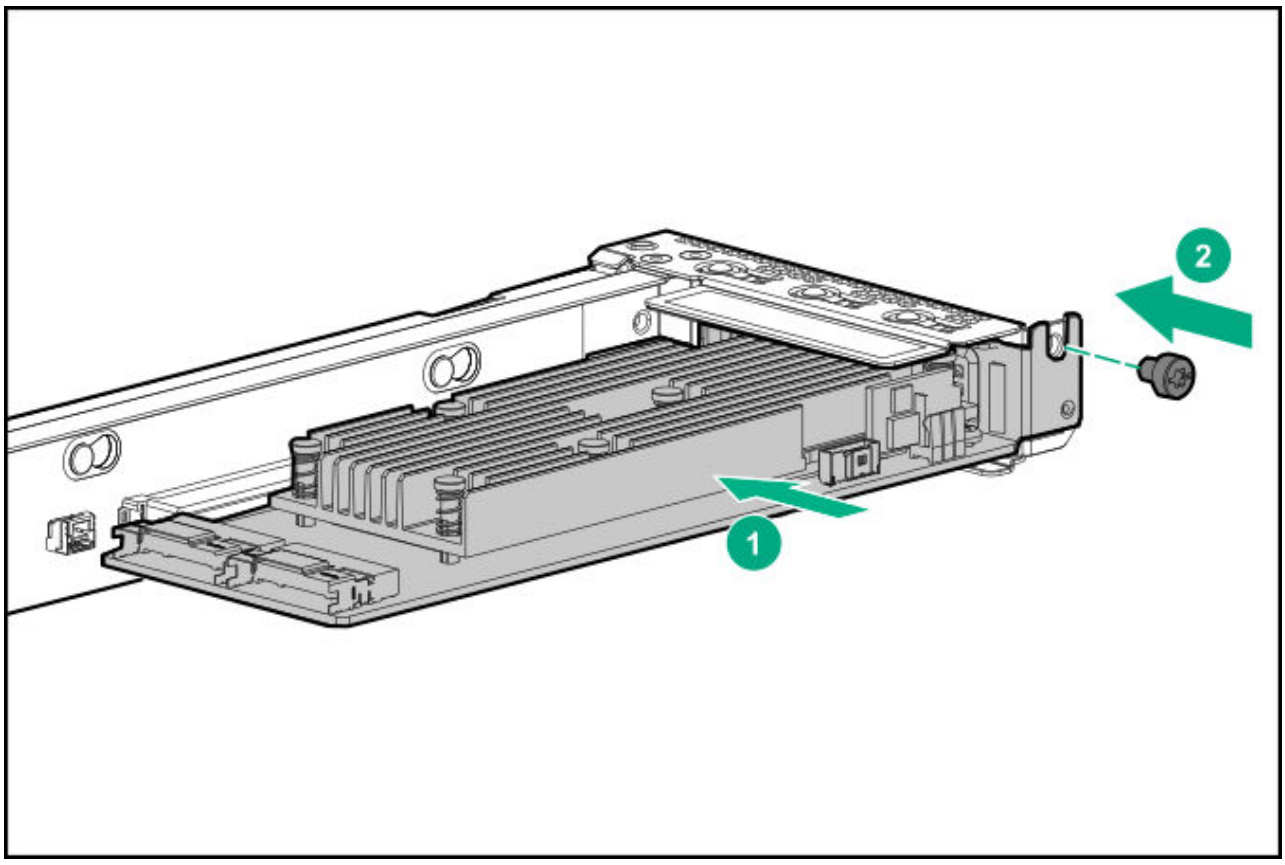

.5. Install the secondary riser.

.6. Connect all necessary internal cabling to the expansion card.

For more information on these cabling requirements, see the documentation that ships with the option.

.7. Install the air baffle.

.8. Install the node cover.

.9. Install the server.

!0. Connect all peripheral cables to the server.

!1. If removed, connect the tube set.

!2. Power up the server.

Results

The installation is complete.

OCP NIC 3.0 adapter option

The server supports SFF dual-port and quad-port OCP NIC 3.0 adapter options with various interfaces and advanced interconnect features for high-bandwidth applications.

Subtopics

Installing the OCP NIC 3.0 adapter

Installing the OCP NIC 3.0 adapter

Prerequisites

Before you perform this procedure, make sure that you have a plastic spudger available.

Procedure

1. Power down the server.
2. If installed, disconnect the tube set.
3. Disconnect all peripheral cables from the server.
4. Remove the server.
5. Place the server on a flat, level work surface.
6. Remove the node cover.
7. Remove the primary riser.
8. Remove the OCP 3.0 NIC adapter blank:
    a. Use a plastic spudger to pry the top side of the blank from the server tray (callout 1).
    b. Remove the blank (callout 2).

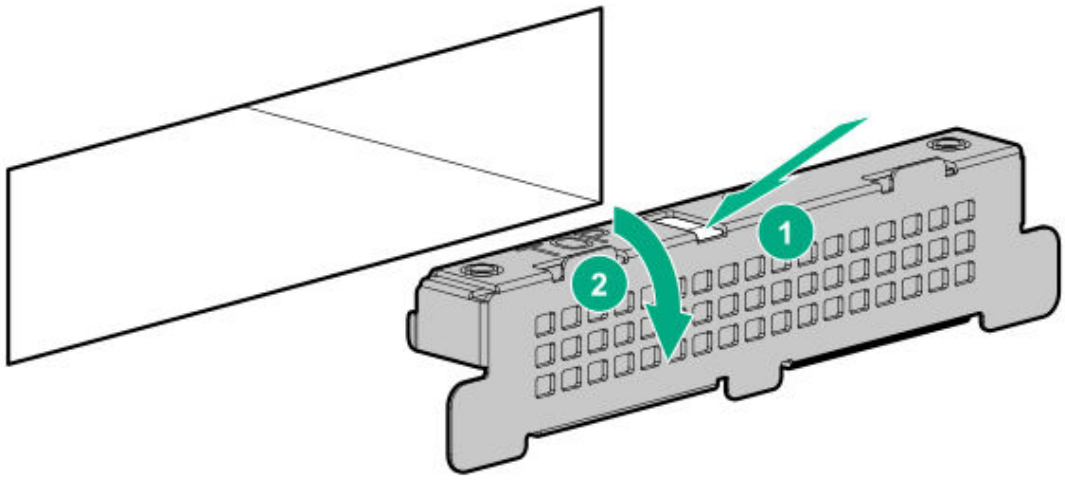

Retain the blank for future use.

9. Install the OCP NIC 3.0 adapter:

   a. Rotate the locking pin to the open (vertical) position (callout 1).

   b. Slide the OCP 3.0 NIC adapter into the bay until it clicks into place (callout 2).

      Make sure that the card is seated firmly in the slot.

   c. Rotate the locking pin to the close (horizontal) position (callout 3).

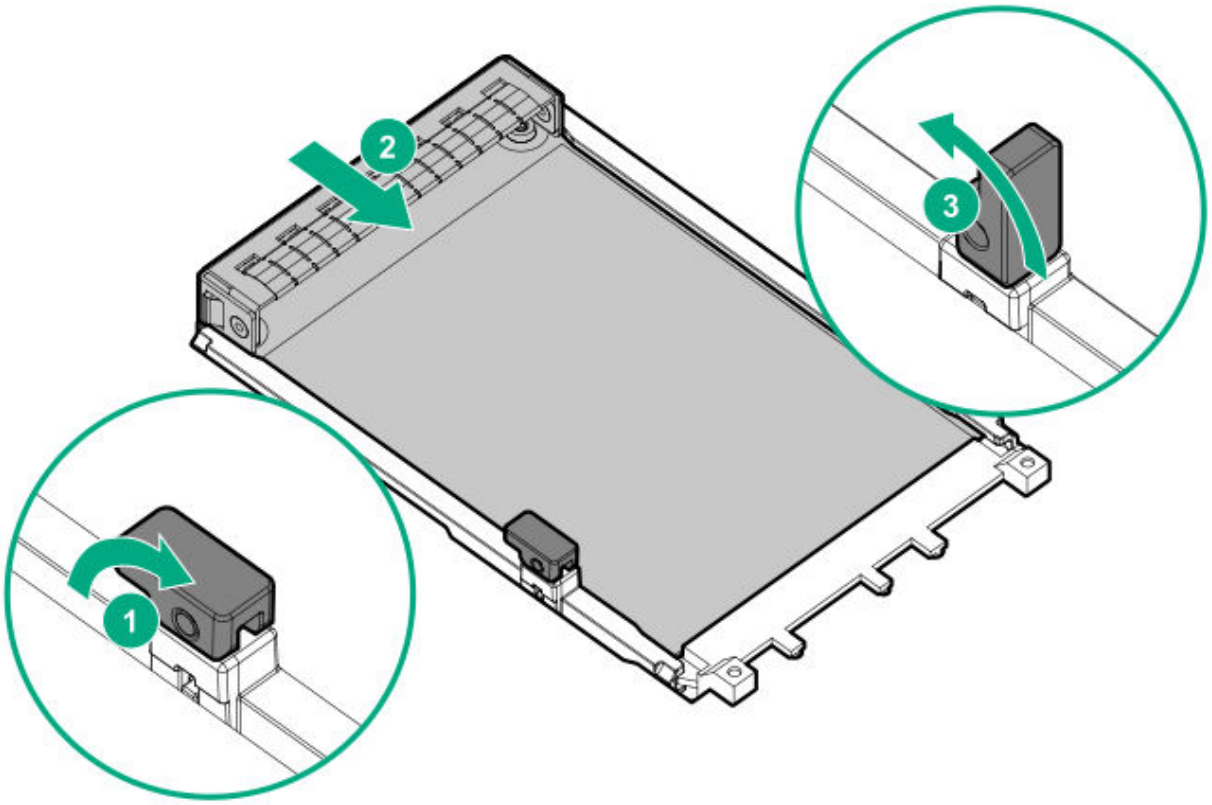

10. Install the primary riser.
11. Install the node cover.
12. Install the server.
13. Do one of the following:
    - Connect the OCP NIC 3.0 adapter cables.
    - Install a compatible transceiver option.
14. Connect all peripheral cables to the server.
15. If removed, connect the tube set.
16. Power up the server.
17. If you want to set the OCP NIC 3.0 adapter port for the iLO interface, use the **Network Option** menu in the UEFI System Utilities.

Results

The installation is complete.

Processor and heatsink options

Subtopics

Installing the processor and heatsink options
Processor cautions
Installing a processor
Installing a heatsink

Installing the processor and heatsink options

Procedure

1. Determine if the new processor requires a specific system operating temperature. For more information, see the HPE website (**https://www.hpe.com/support/xl225ngen10plus-thermal**).
2. Identify the processor and socket components.

3. Review the processor cautions.
4. Install the processor.
5. Install the heatsink.

Processor cautions

CAUTION: To avoid damage to the processor and system board, only authorized personnel should attempt to replace or install the processor in this server.

CAUTION: To prevent possible server malfunction and damage to the equipment, multiprocessor configurations must contain processors with the same part number.

CAUTION: If installing a processor with a faster speed, update the system ROM before installing the processor.

To download the firmware and view installation instructions, see the **Hewlett Packard Enterprise Support Center website**.

CAUTION: THE CONTACTS ARE VERY FRAGILE AND EASILY DAMAGED. To avoid damage to the socket or processor, do not touch the contacts.

IMPORTANT:

AMD EPYC processors with a model number that ends with P are designed for single-processor configurations (1P) only.

Installing a processor

Prerequisites

Before you perform this procedure, make sure that you have a T-20 Torx screwdriver available.

Procedure

1. Power down the server.
2. Disconnect all peripheral cables from the server.
3. Remove the server.
4. Place the server on a flat, level work surface.
5. Remove the node cover.
6. Remove the air baffle.

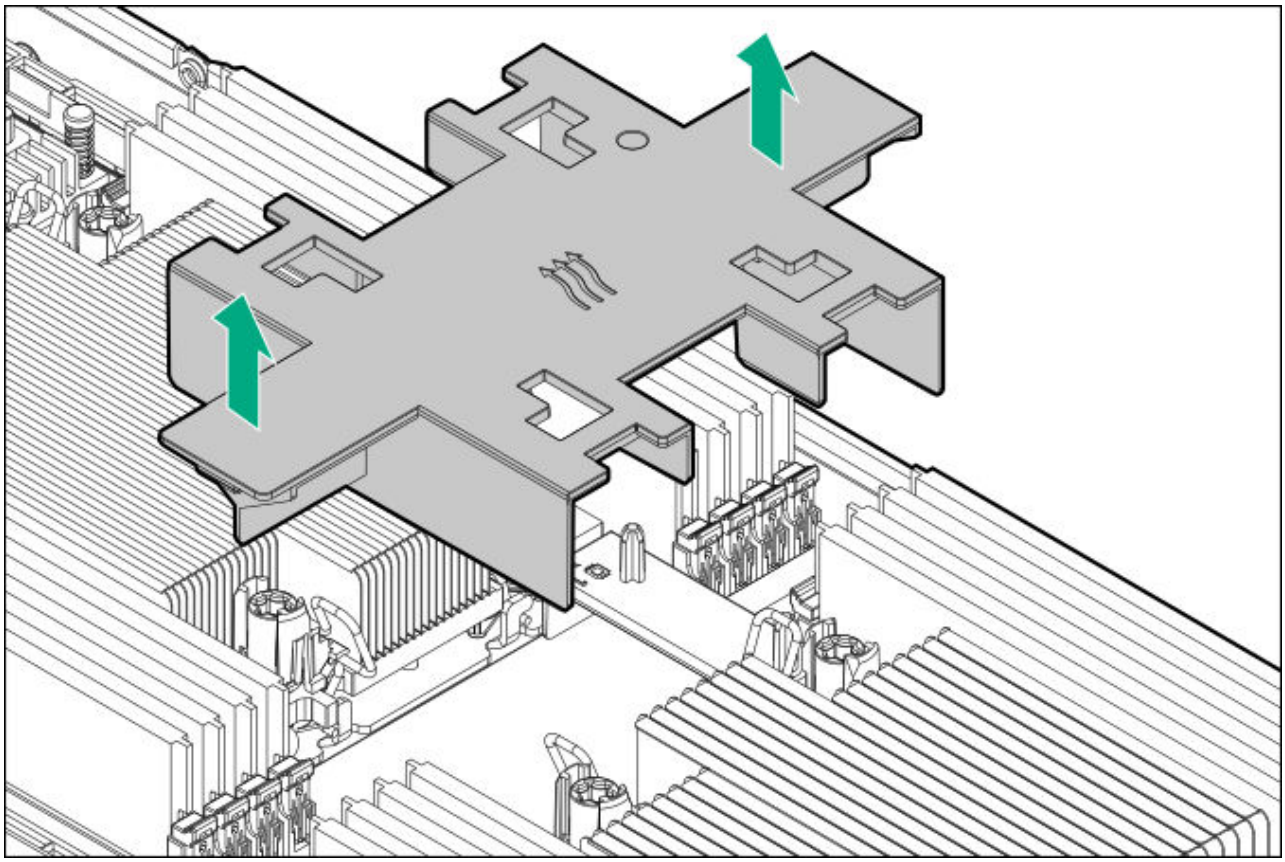

7. Use a T-20 Torx screwdriver to loosen the three captive screws in the sequence shown in the following image, and then pivot the force frame upward.
8. Remove the external cap:
   a. Hold the lift tabs near the front end of the rail frame, and then pivot the rail frame to the vertical position.
   b. Slide the external cap out of the rail frame.

      Retain the external cap for future use.

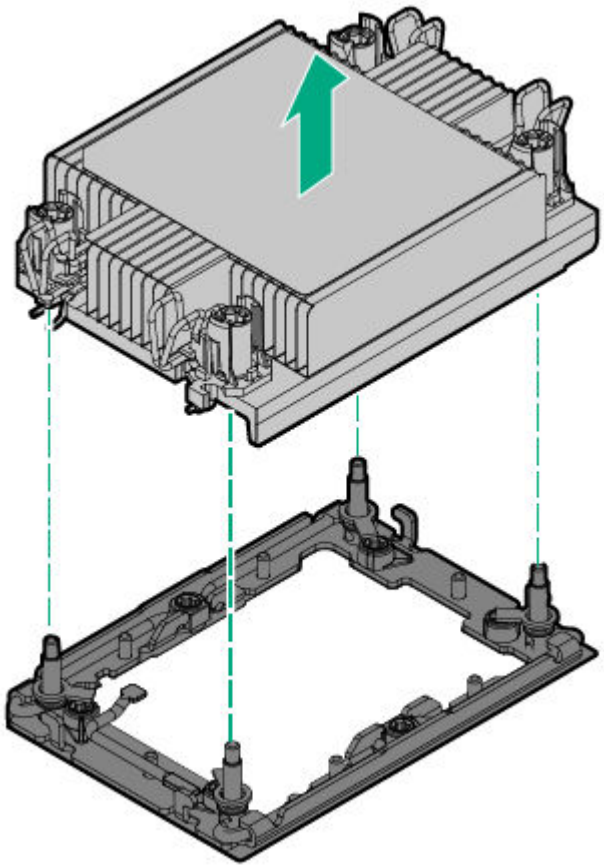

9. Install the processor:

   a. Hold the processor by its carrier handle and slide the processor into the rail frame until it engages with a click sound.

   b. Remove the pin field cover cap.

   > **CAUTION:**
   >
   > To prevent the risk of damaging the pins in the processor socket, do not reinstall the pin field cover cap after removing it.

   c. Hold the lift tabs near the front end of the rail frame, and then pivot the rail frame to the closed position.

      A click sound indicates that the rail frame is properly engaged.

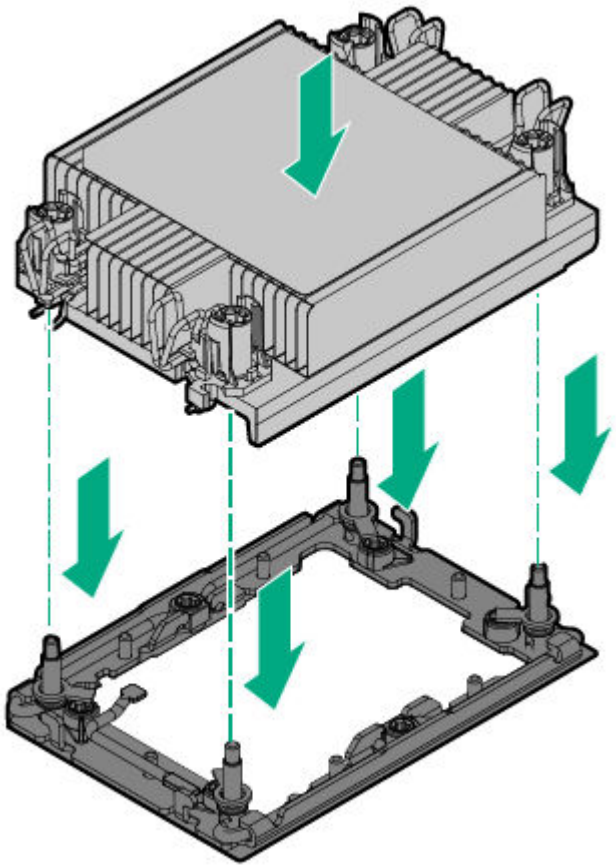

.0. Close the force frame:

> **CAUTION:**
>
> Do not overtighten the screws as this might damage the system board or the processor socket.

a. Pivot the spring loaded force frame downward and hold it down (callout 1).

b. Use a T-20 Torx screwdriver to tighten the captive screws in the sequence shown in the following image (callouts 2–4).

   When using a torque wrench to tighten the screws, apply a torque of 1.58 N · m (14 lbf-in).

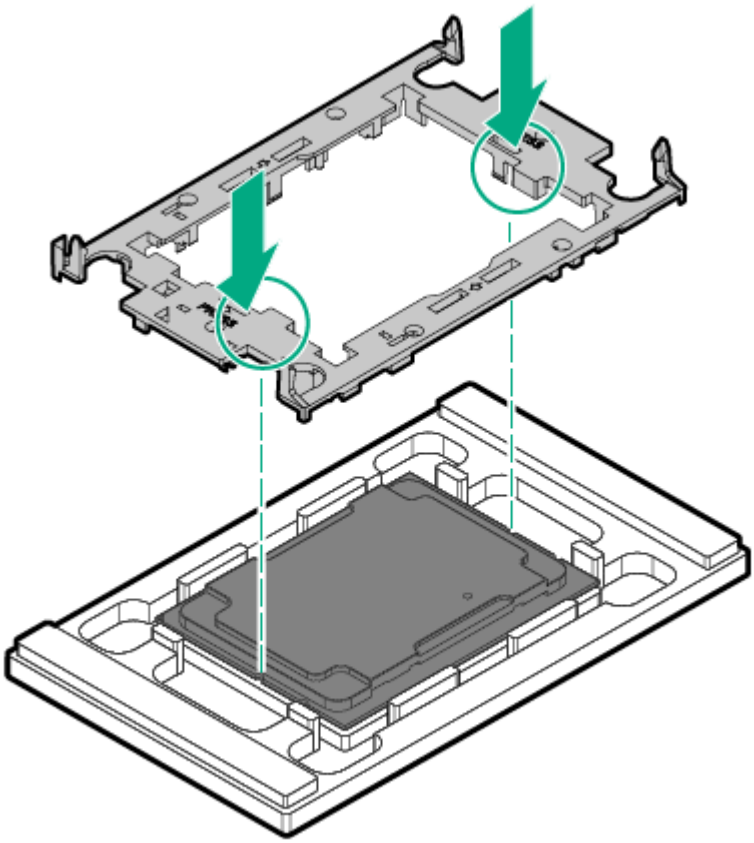

1. Install the heatsink.

Installing a heatsink

Prerequisites

Before you perform this procedure, make sure that you have a T-20 Torx screwdriver available.

About this task

The heatsinks for processors 1 and 2 are not interchangeable. To identify the correct heatsink for each processor, see the heatsink label. Also, note the markers on the T-shaped heatsink numbering pointer to identify the processor socket number.

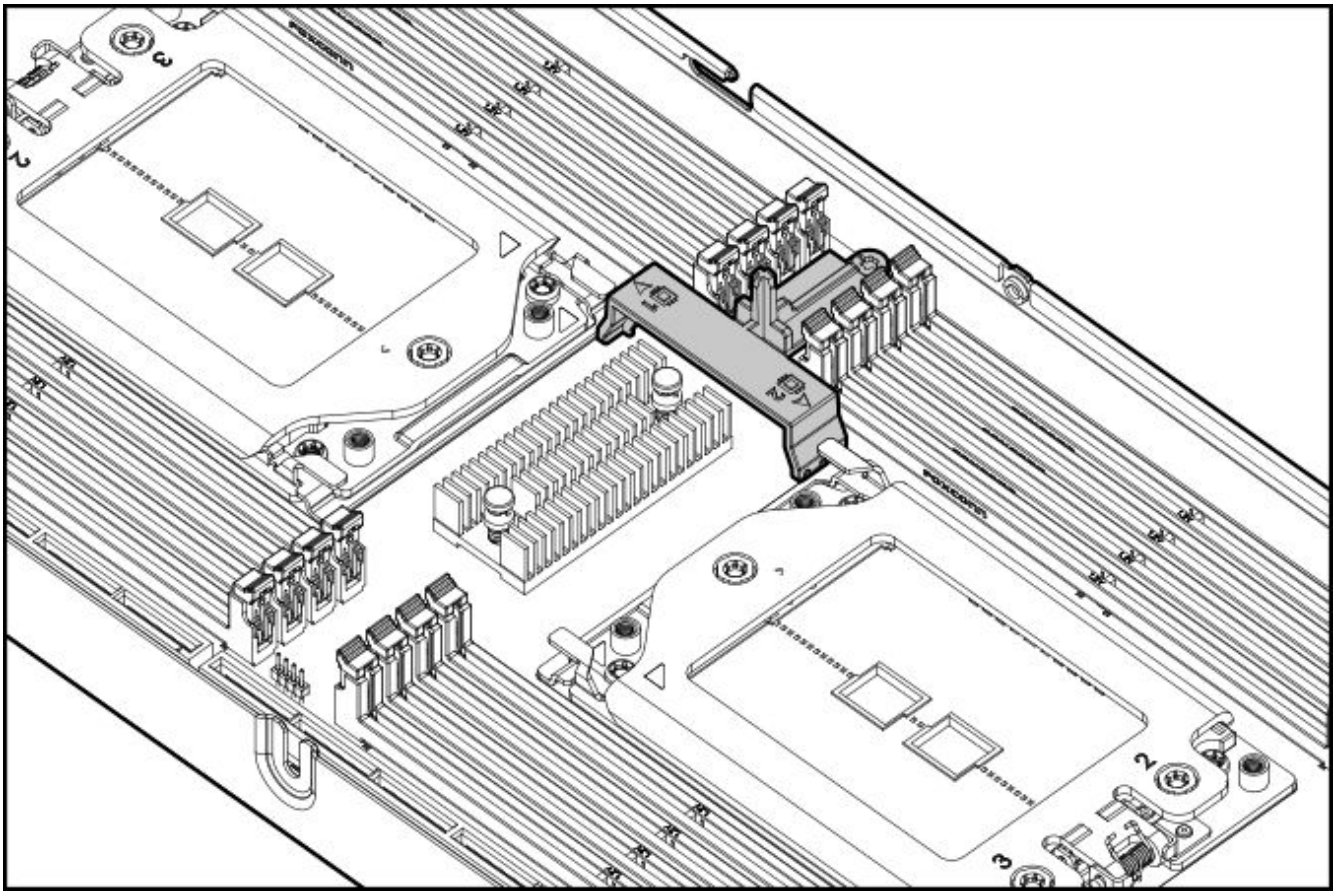

Procedure

1. Remove the thermal interface protective cover from the new heatsink.

2. Install the heatsink:

> **CAUTION:** To prevent mechanical damage or depositing oil on your hands or other contaminants to the heatsink contact surface, hold the heatsink only by the edge of its base plate. Do not touch the heatsink fins.

> **CAUTION:**
>
> To prevent thermal failure or component damage, do not move the heatsink once the bottom of its base plate touches the top of the processor. Excessive heatsink movement can cause the thermal grease to smear and become uneven. Voids in the compound can adversely impact the transfer of heat away from the processor.

> **CAUTION:**
>
> Heatsink screws must be tightened and loosened in alternating sequence. Do not overtighten the screws as this might damage the system board or the processor socket.

a. Position the heatsink on top of the processor, ensuring that it is properly seated before securing the screws.

b. Use a T-20 Torx screwdriver to tighten the captive screws in the sequence specified on the heatsink label.

   When using a torque wrench to tighten the screws, apply a torque of 1.58 N-m (14 lbf-in).

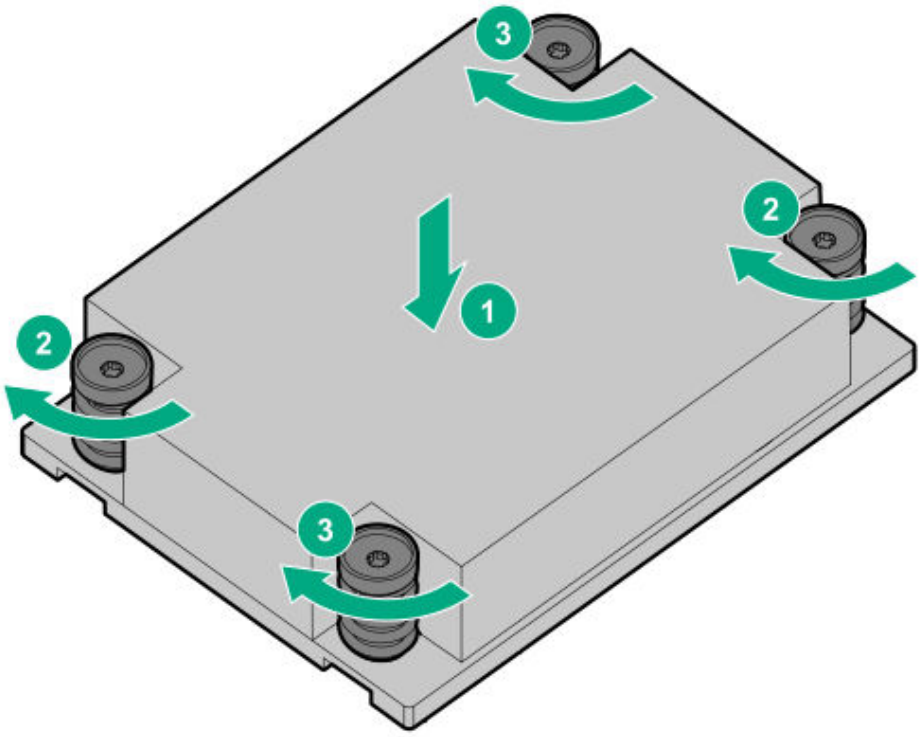

3. Install the air baffle.
4. Install the node cover.
5. Install the server.
6. Connect all peripheral cables to the server.
7. Power up the server.

Results

The installation is complete.

Memory options

The server has 16 DIMM slots—8 memory channels per processor—supporting HPE DDR4 SmartMemory (RDIMM or LRDIMM). At least one DIMM per processor is required for system operation.

The installed processor determines the maximum memory capacity per server. For more information, see the QuickSpecs on the product page (**https://www.hpe.com/servers/apollo2000**).

CAUTION:

- Do not install RDIMMs and LRDIMMs in the same server.
- Do not install ×4 and ×8 DRAM widths in the same server.

Attempting to mix any combination of these DIMMs can cause the server to halt during BIOS initialization. All memory installed in the server must be of the same type.

Subtopics

DIMM population information
HPE SmartMemory speed information
Installing a DIMM

DIMM population information

For specific DIMM population information, see the DIMM population guidelines on the Hewlett Packard Enterprise website (**https://www.hpe.com/docs/amd-population-rules-Gen10Plus**).

HPE SmartMemory speed information

For more information about memory speed information in HPE servers using AMD EPYC processors, see the Hewlett Packard Enterprise website (**https://www.hpe.com/docs/amd-speed-table-Gen10Plus**).

Installing a DIMM

Procedure

1. Power down the server.
2. If installed, disconnect the tube set.
3. Disconnect all peripheral cables from the server.
4. Remove the server.

5. Place the server on a flat, level work surface.
6. Remove the node cover.
7. Do one of the following:
   - In an air cooled configuration, remove the air baffle.

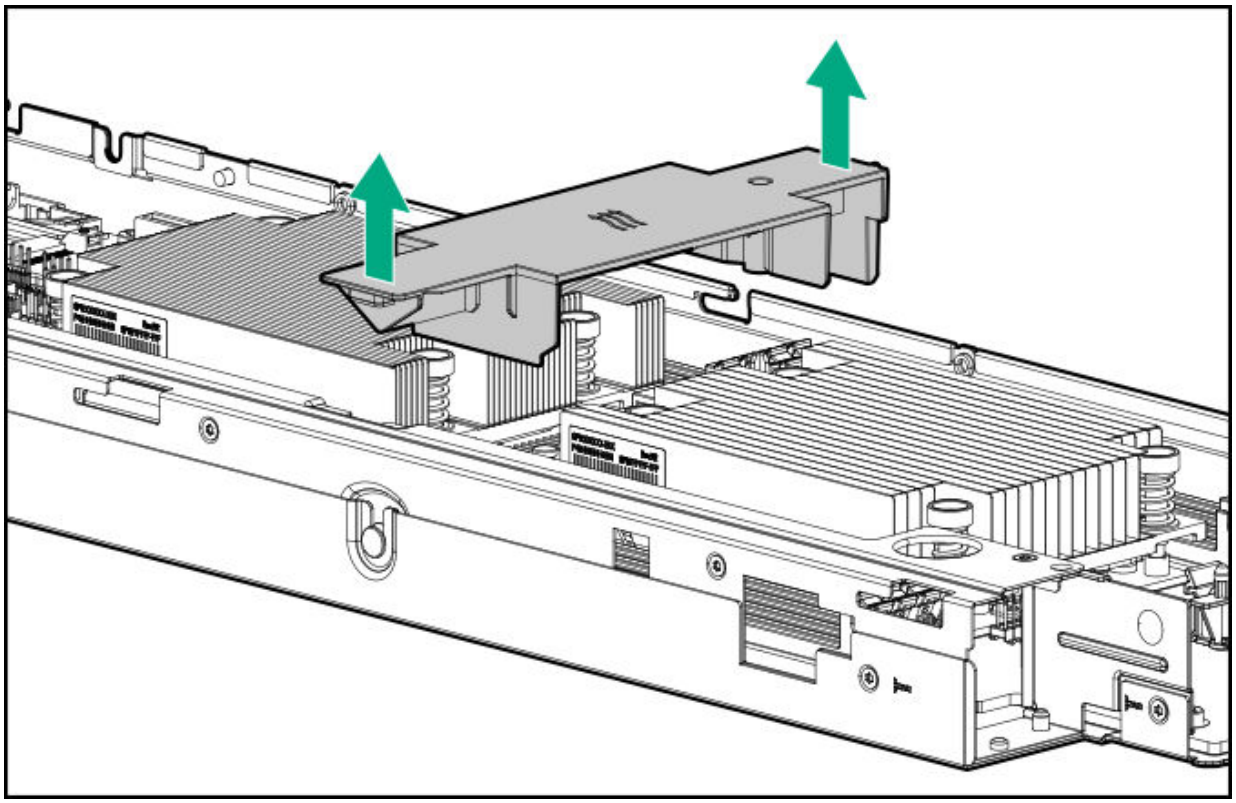

   - In a DLC configuration with the DIMM-processor cooling loop, remove the following:
     - DIMM release tool

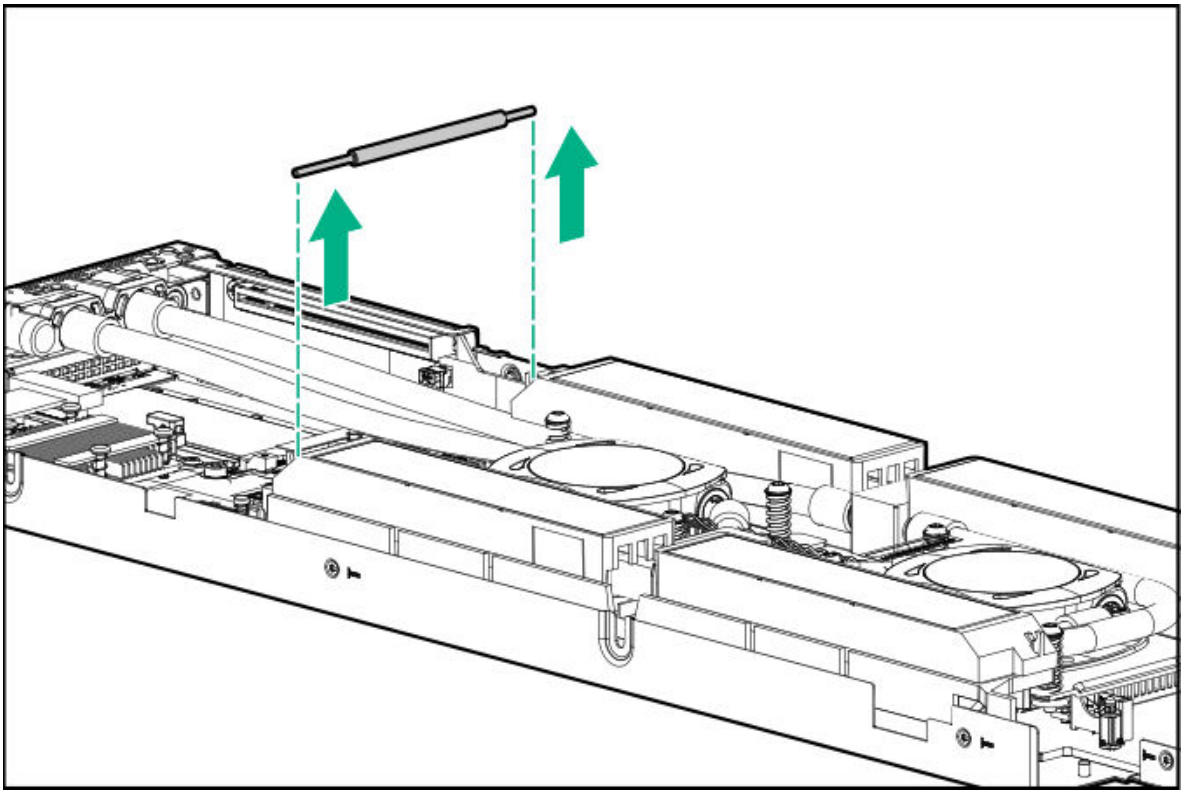

- DIMM cover for the slot where the new DIMM will be installed

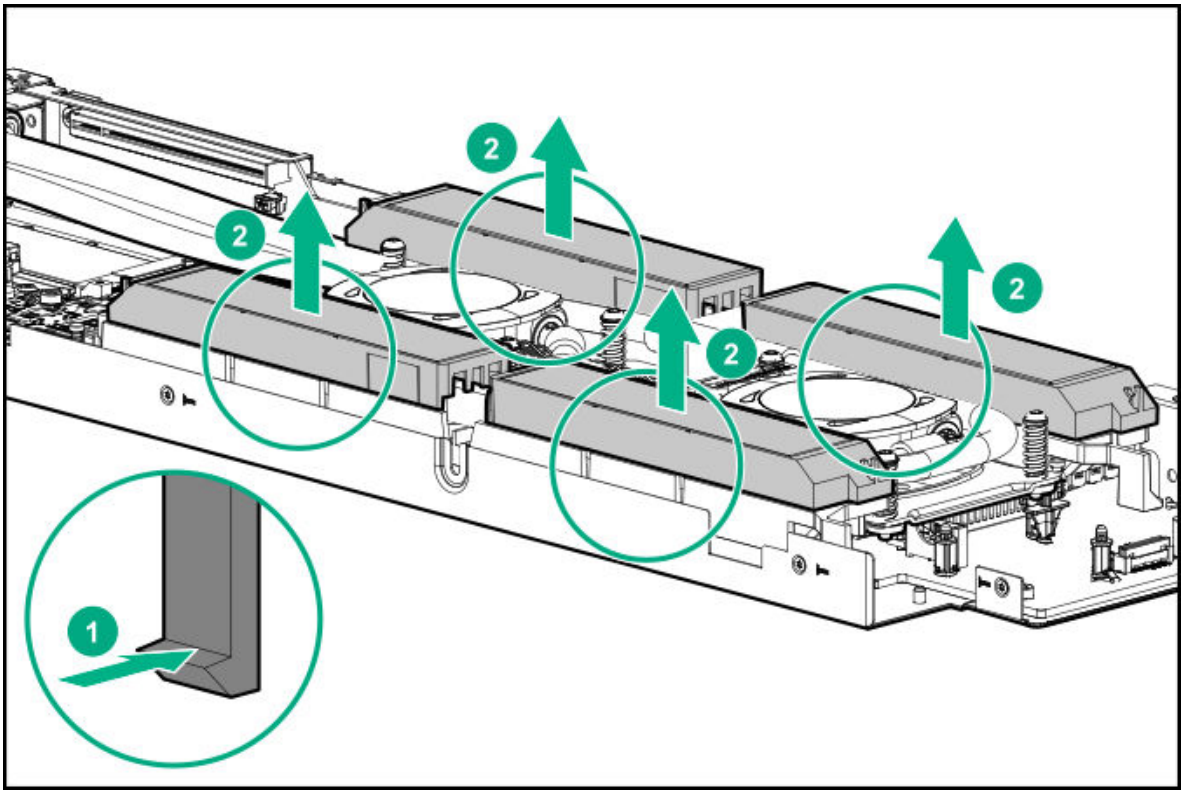

8. Install the DIMM:

   a. Open the DIMM slot latches.

      In a DLC configuration with the DIMM-processor cooling loop, use the longer end of the DIMM release tool to open the DIMM slot latches.

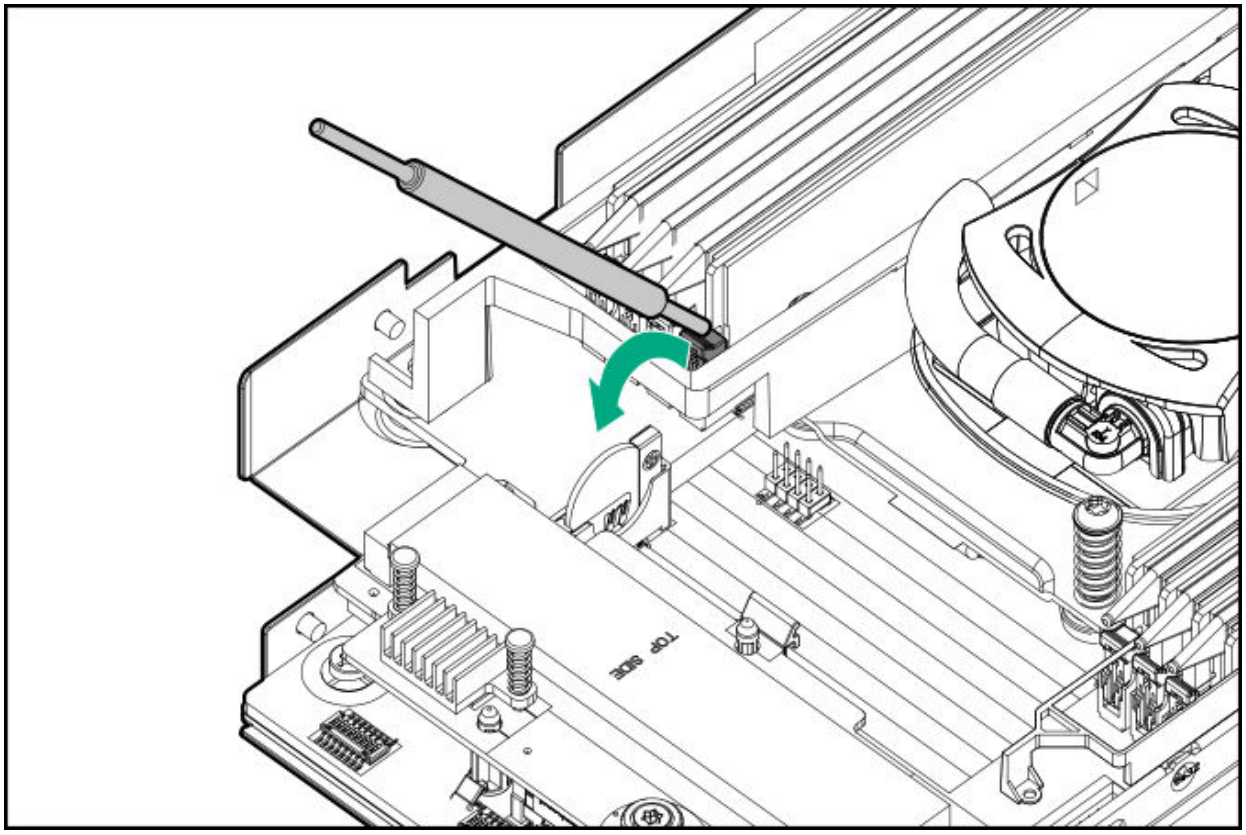

   b. Align the notch on the bottom edge of the DIMM with the keyed surface of the DIMM slot, and then fully press the DIMM into the slot until the latches snap back into place.

      The DIMM slots are structured to ensure proper installation. If you try to insert a DIMM but it does not fit easily into the slot, you might have positioned it incorrectly. Reverse the orientation of the DIMM and insert it again.

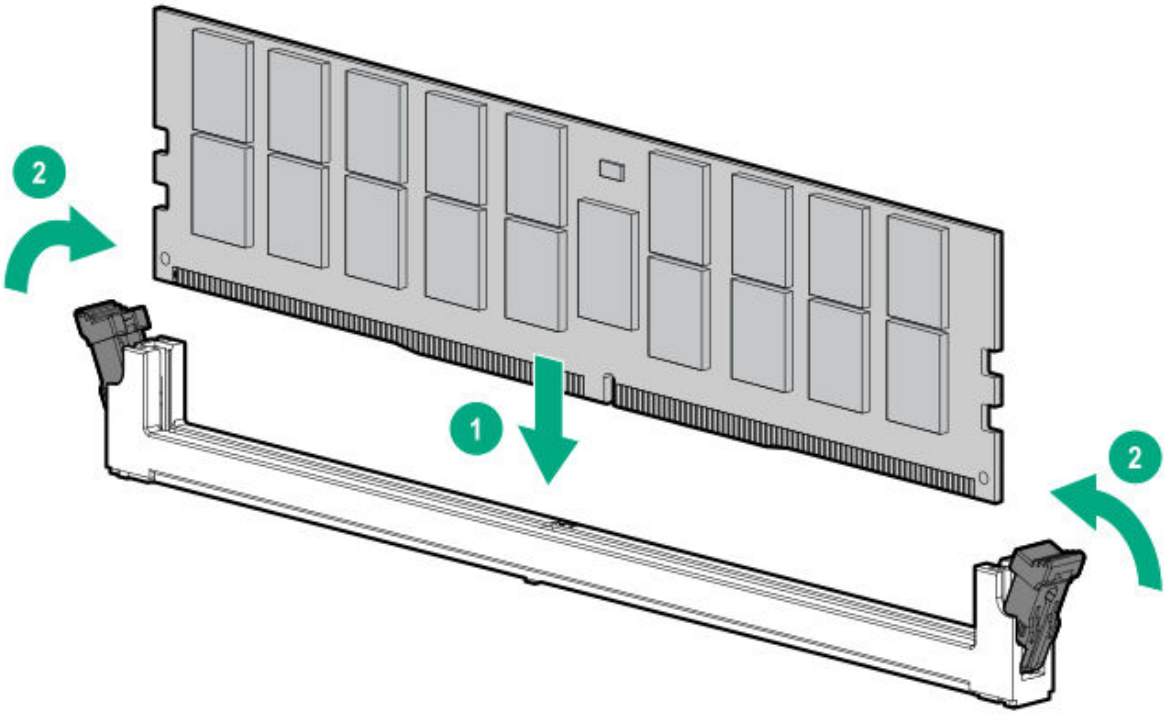

9. Do one of the following:

   - In an air cooled configuration, install the air baffle.

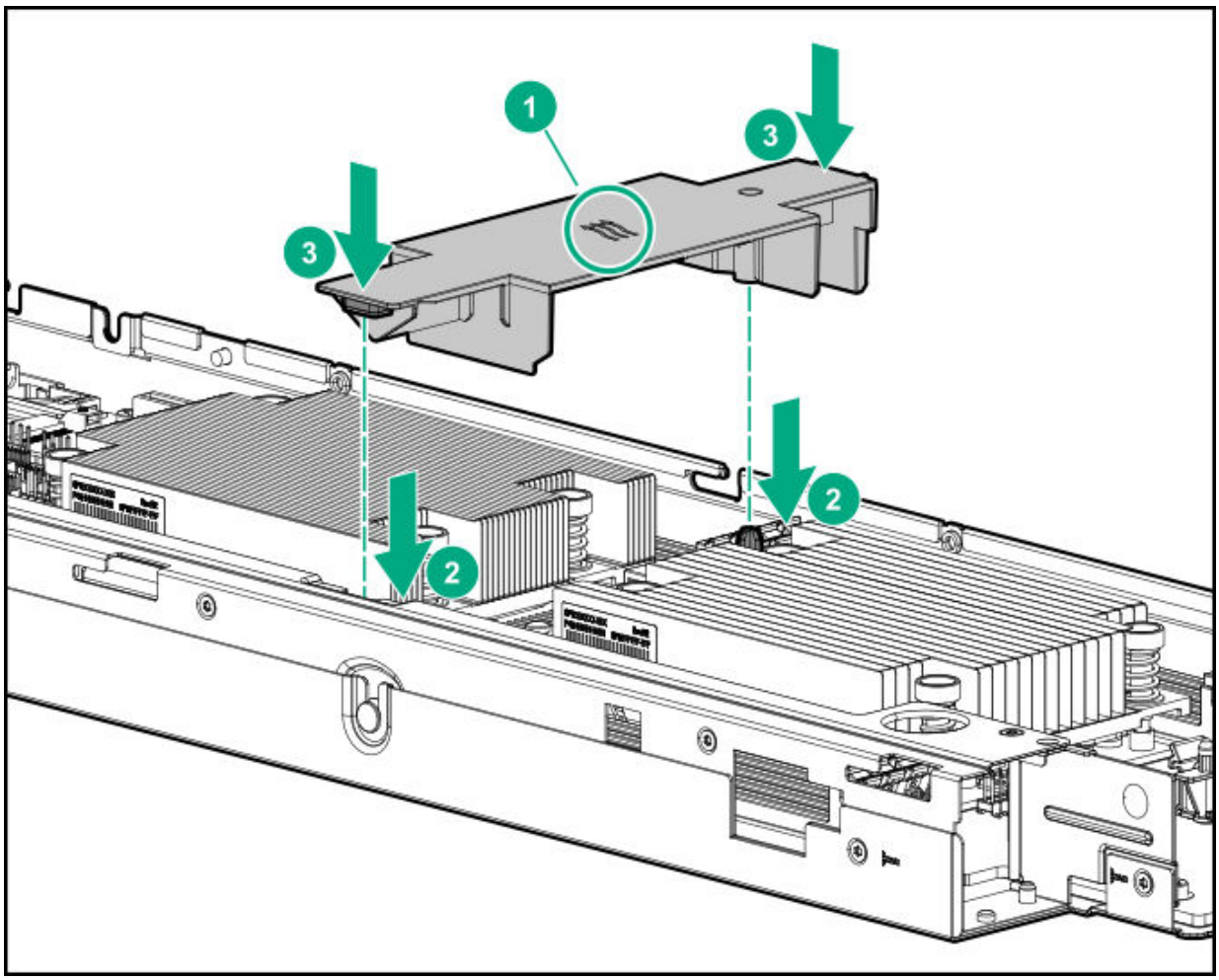

- In a DLC configuration with the DIMM-processor cooling loop, install the following:
  - DIMM cover

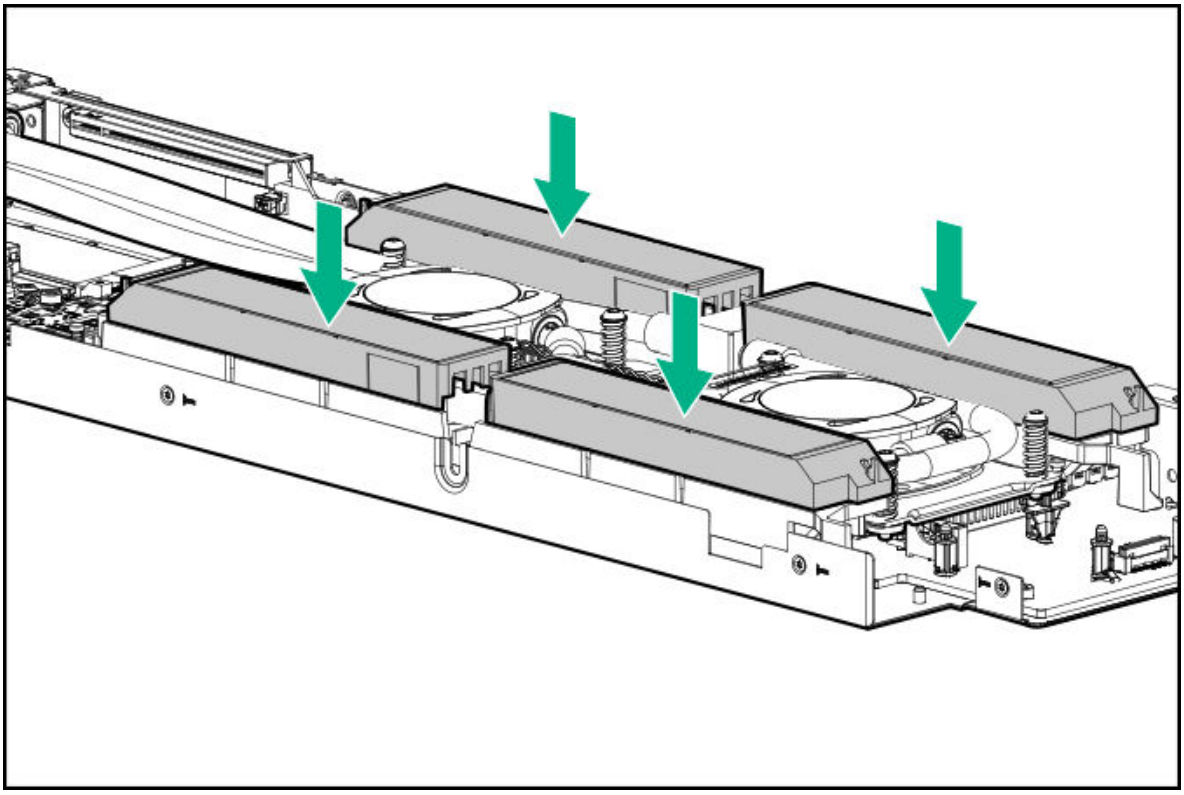

- DIMM release tool

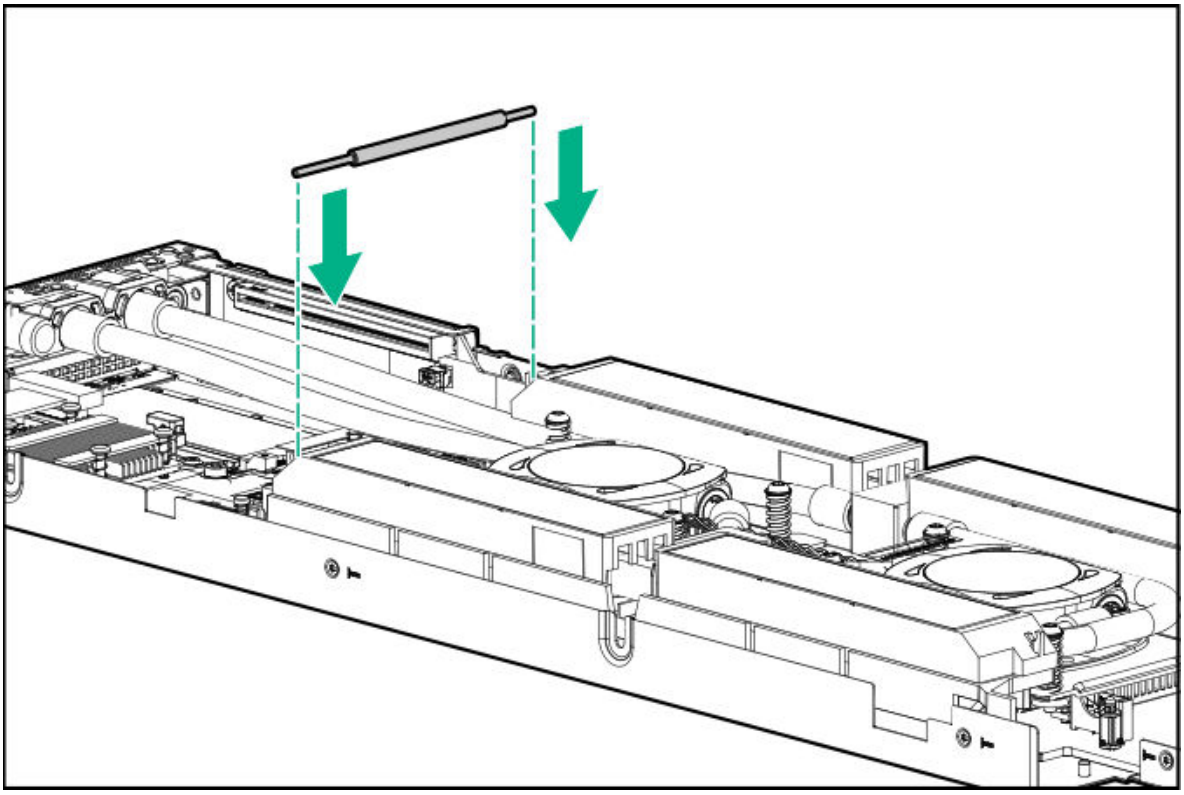

10. Install the node cover.
11. Install the server.
12. Connect all peripheral cables to the server.
13. If removed, connect the tube set.
14. Power up the server.

Results

The installation is complete.

After installing the DIMMs, use the **System Utilities > System Configuration > BIOS/Platform Configuration (RBSU) > Memory Options** to configure the memory settings.

Mezzanine card option

The server supports a mezzanine card to install an internal USB device that can be used as a flash boot media or for data backup/redundancy.

Subtopics

Installing the mezzanine card for internal USB device

Installing the mezzanine card for internal USB device

Procedure

1. Power down the server.
2. If installed, disconnect the tube set.
3. Disconnect all peripheral cables from the server.
4. Remove the server.
5. Place the server on a flat, level work surface.
6. Remove the node cover.
7. Plug in the USB device into the USB port of the mezzanine card.

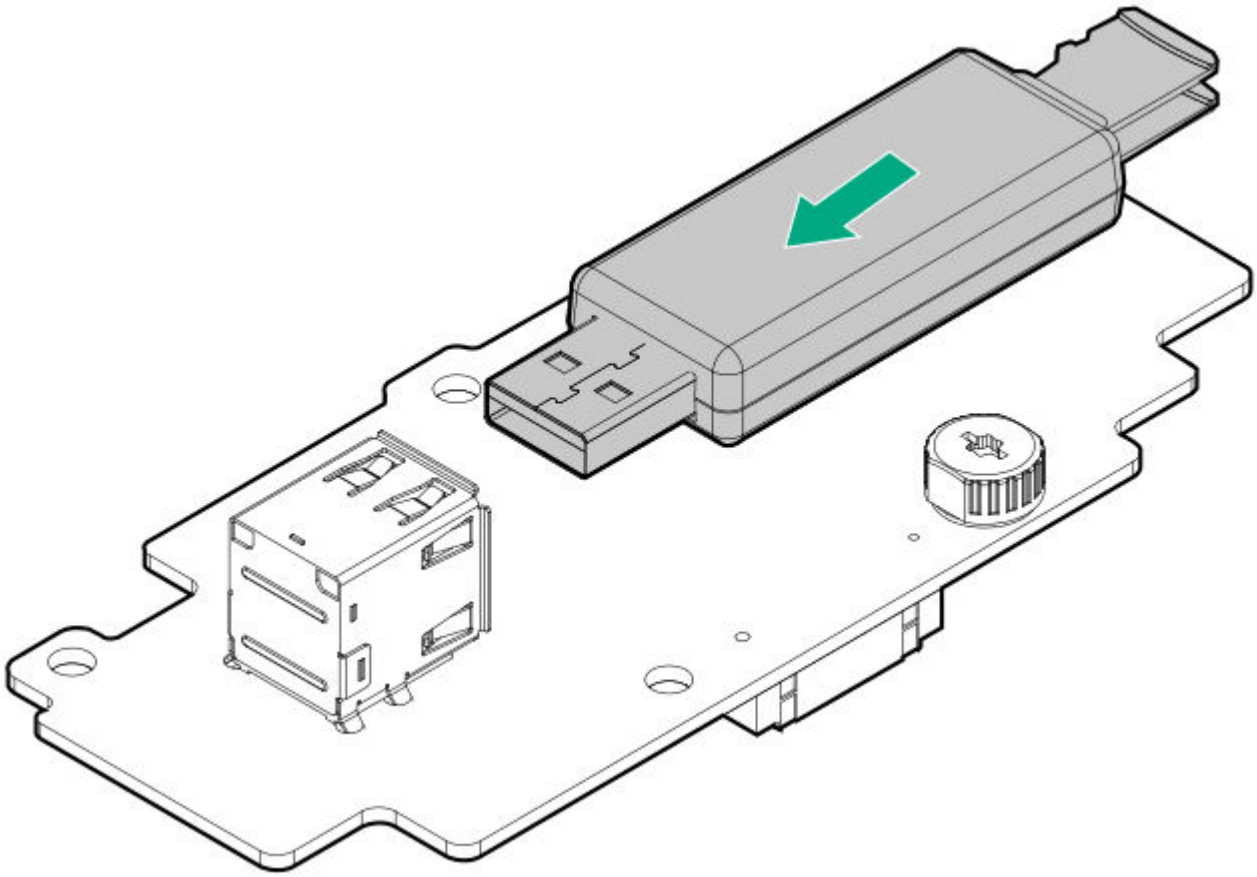

8. Install the mezzanine card:
   a. Insert the spacers on the system board through the holes on the card (callout 1).
   b. Carefully press the card down on its system board connector (callout 2).

      Make sure that the card is firmly seated.
   c. Tighten the card thumbscrew (callout 3)

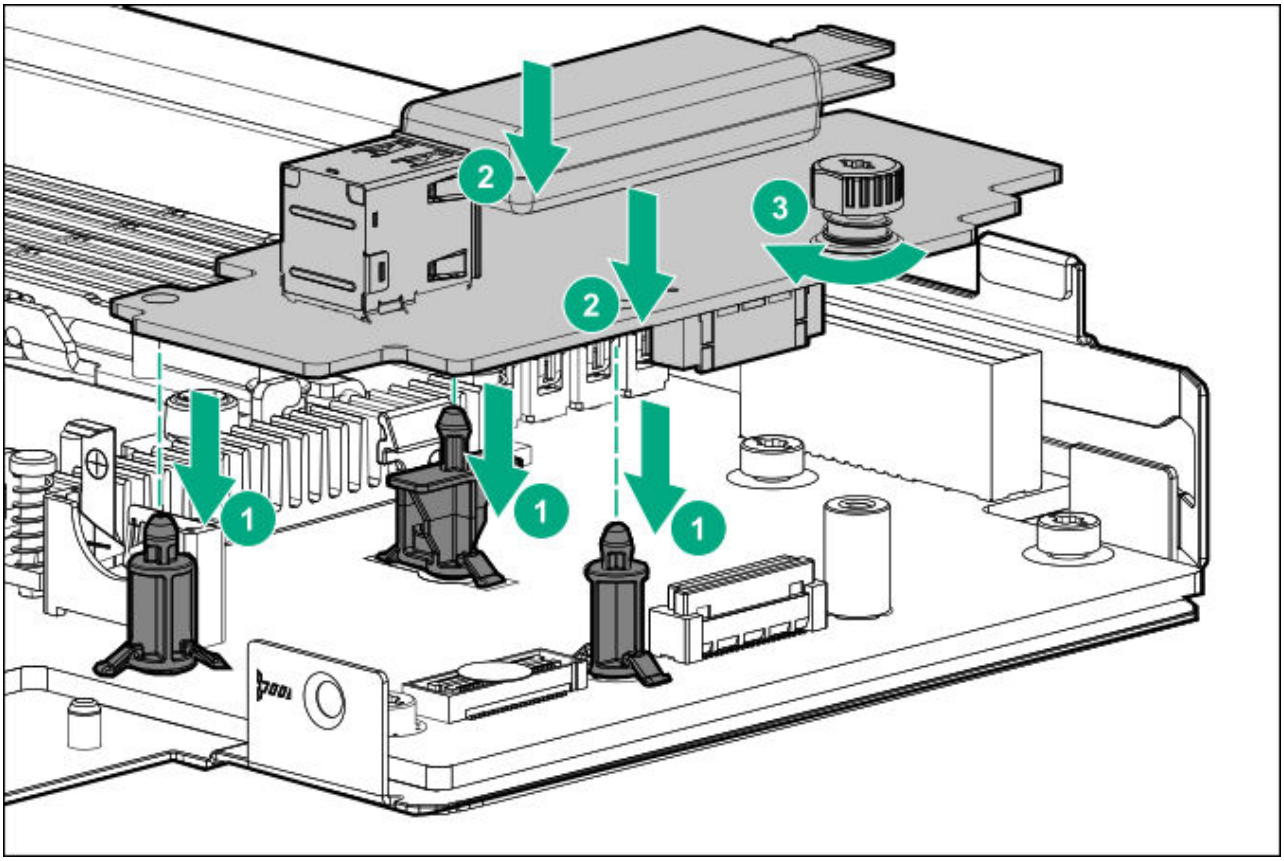

9. Install the node cover.
10. Install the server.
11. Connect all peripheral cables to the server.
12. If removed, connect the tube set.
13. Power up the server.

Results

The installation is complete.

HPE Trusted Platform Module 2.0 Gen10 Plus option

Subtopics

Overview
HPE Trusted Platform Module 2.0 guidelines
Installing and enabling the HPE TPM 2.0 Gen10 Plus option

Overview

Use these instructions to install and enable an HPE TPM 2.0 Gen10 Plus Kit in a supported server. This option is not supported on Gen10 and earlier servers.

This procedure includes three sections:

1. Installing the Trusted Platform Module board.
2. Enabling the Trusted Platform Module.
3. Retaining the recovery key/password.

HPE TPM 2.0 installation is supported with specific operating system support such as Microsoft Windows Server 2012 R2 and later. For more information about operating system support, see the product QuickSpecs on the Hewlett Packard Enterprise website (**https://www.hpe.com/info/qs**). For more information about Microsoft Windows BitLocker Drive Encryption feature, see the Microsoft website (**https://www.microsoft.com**).

CAUTION: If the TPM is removed from the original server and powered up on a different server, data stored in the TPM including keys will be erased.

IMPORTANT: In UEFI Boot Mode, the server can be configured to operate as TPM 2.0 (default) or TPM 1.2 on a supported server. In Legacy Boot Mode, the configuration can be changed between TPM 1.2 and TPM 2.0, but only TPM 1.2 operation is supported.

HPE Trusted Platform Module 2.0 guidelines

CAUTION: Always observe the guidelines in this document. Failure to follow these guidelines can cause hardware damage or halt data access.

Hewlett Packard Enterprise SPECIAL REMINDER: Before enabling TPM functionality on this system, you must ensure that your intended use of TPM complies with relevant local laws, regulations and policies, and approvals or licenses must be obtained if applicable.

For any compliance issues arising from your operation/usage of TPM which violates the above mentioned requirement, you shall bear all the liabilities wholly and solely. Hewlett Packard Enterprise will not be responsible for any related liabilities.

慧与特别提醒：在您启用系统中的TPM功能前，请务必确认您对TPM的使用遵守当地相关法律、法规及政策，并已事先获得所需的一切批准及许可（如适用），因您未获得相应的操作/使用许可而导致的违规问题，皆由您自行承担全部责任，与慧与无涉。

When installing or replacing a TPM, observe the following guidelines:

- Do not remove an installed TPM. Once installed, the TPM becomes a permanent part of the system board.
- When installing or replacing hardware, Hewlett Packard Enterprise service providers cannot enable the TPM or the encryption technology. For security reasons, only the customer can enable these features.
- When returning a system board for service replacement, do not remove the TPM from the system board. When requested, Hewlett Packard Enterprise Service provides a TPM with the spare system board.
- Any attempt to remove the cover of an installed TPM from the system board can damage the TPM cover, the TPM, and the system board.
- If the TPM is removed from the original server and powered up on a different server, all data stored in the TPM including keys will be erased.
- When using BitLocker, always retain the recovery key/password. The recovery key/password is required to complete Recovery Mode after BitLocker detects a possible compromise of system integrity.
- Hewlett Packard Enterprise is not liable for blocked data access caused by improper TPM use. For operating instructions, see the TPM documentation or the encryption technology feature documentation provided by the operating system.

Installing and enabling the HPE TPM 2.0 Gen10 Plus option

Subtopics

Installing the Trusted Platform Module board
Enabling the Trusted Platform Module
Retaining the BitLocker recovery key/password

Installing the Trusted Platform Module board

Subtopics

Preparing the server for installation

Installing the TPM board and cover
Preparing the server for operation

Preparing the server for installation

Procedure

1. Observe the following warnings:

   > **WARNING:**
   > To reduce the risk of personal injury, electric shock, or damage to the equipment, disconnect the power cord to remove power from the server. Pressing the Power On/Standby button does not shut off system power completely. Portions of the power supply and some internal circuitry remain active until AC power is removed.

   > **WARNING:** To reduce the risk of personal injury from hot surfaces, allow the drives and the internal system components to cool before touching them.

2. Update the system ROM.

   Locate and download the latest ROM version from the Hewlett Packard Enterprise Support Center website (**https://www.hpe.com/support/hpesc**). To update the system ROM, follow the instructions on the website.

3. Power down the server.
4. If installed, disconnect the tube set.
5. Disconnect all peripheral cables from the server.
6. Remove the server.
7. Place the server on a flat, level work surface.
8. Remove the node cover.
9. If either an expansion card or a cooling loop bracket is installed on the primary riser is blocking the TPM connector, remove the riser.
10. Proceed to "Installing the TPM board and cover."

Installing the TPM board and cover

Procedure

1. Observe the following alerts:

   CAUTION: If the TPM is removed from the original server and powered up on a different server, data stored in the TPM including keys will be erased.

   CAUTION: The TPM is keyed to install only in the orientation shown. Any attempt to install the TPM in a different orientation might result in damage to the TPM or system board.

2. Install the TPM board:

   a. Locate the TPM connector on the system board. See the server hood label for the exact location.

   b. Align the TPM board with the key on the connector, and then install the TPM board. To seat the board, press the TPM board firmly into the connector.

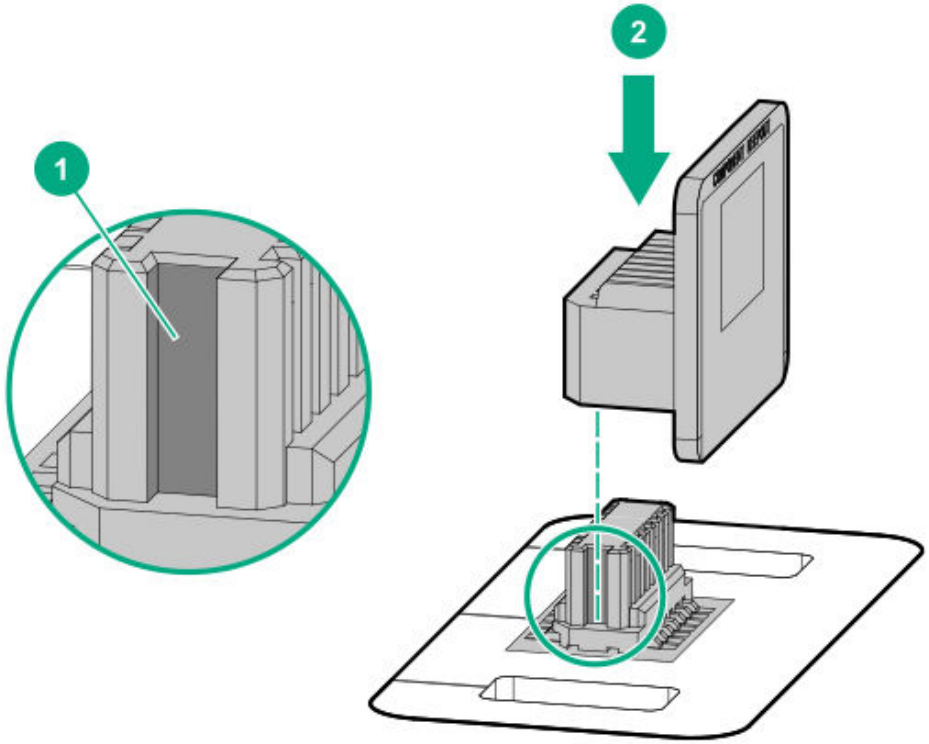

3. Install the TPM cover:
    a. Align the pins on the cover with the openings on the system board.
    b. Press straight down on the middle of the cover until the alignment pins are seated into the holes.

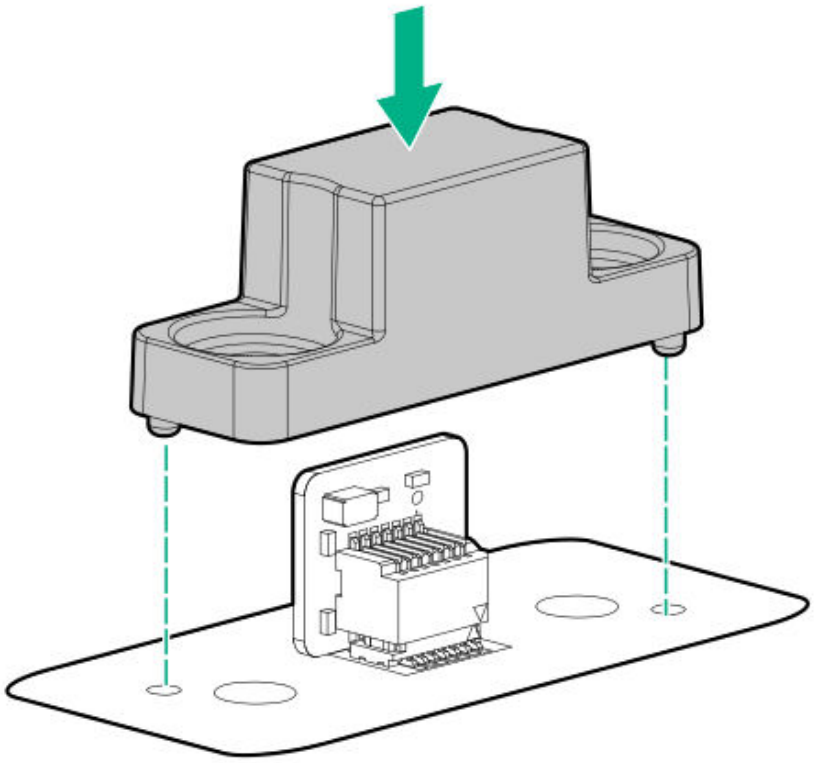

4. Secure the rivets into place by pushing them firmly through the holes in the TPM cover.

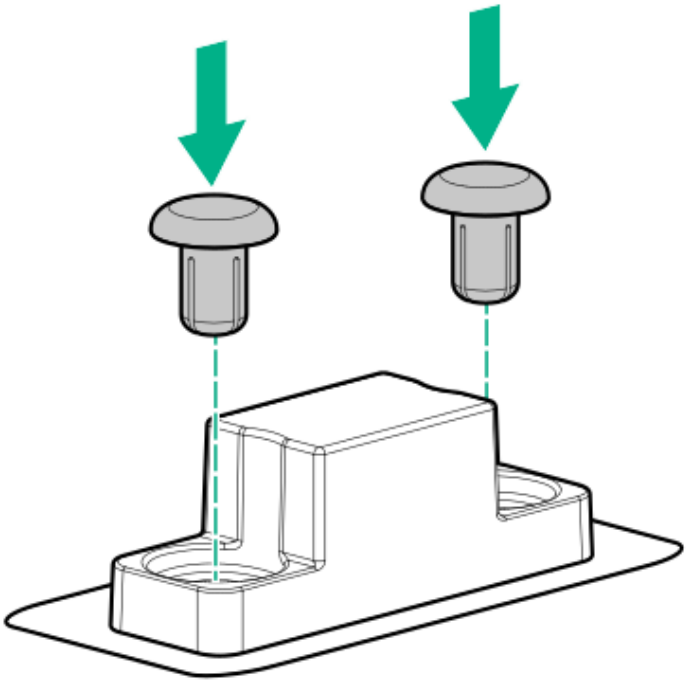

5. Proceed to "Preparing the server for operation."

Preparing the server for operation

Procedure

1. If the primary riser was removed, install the riser.
2. Install the node cover.
3. Install the server.
4. Connect all peripheral cables to the server.
5. If removed, connect the tube set.
6. Power up the server.

Enabling the Trusted Platform Module

When enabling the Trusted Platform module, observe the following guidelines:

- By default, the Trusted Platform Module is enabled as TPM 2.0 when the server is powered on after installing it.
- In UEFI Boot Mode, the Trusted Platform Module can be configured to operate as TPM 2.0 (default) or TPM 1.2.
- In Legacy Boot Mode, the Trusted Platform Module configuration can be changed between TPM 1.2 and TPM 2.0 (default), but only TPM 1.2 operation is supported.

Subtopics

Enabling the Trusted Platform Module as TPM 2.0
Enabling the Trusted Platform Module as TPM 1.2

Enabling the Trusted Platform Module as TPM 2.0

About this task

Procedure

1. From the boot screen, press **F9** to access the UEFI System Utilities.
2. From the **System Utilities** screen, select **System Configuration > BIOS/Platform Configuration (RBSU) > Server Security > Trusted Platform Module options**.
3. Verify the following:
   - "Current TPM Type" is set to **TPM 2.0**.
   - "Current TPM State" is set to **Present and Enabled**.
   - "TPM Visibility" is set to **Visible**.
4. If changes were made in the previous step, press **F10** to save your selection.
5. If **F10** was pressed in the previous step, do one of the following:
   - If in graphical mode, click **Yes**.
   - If in text mode, press the **Y** key.
6. Press **Esc** to exit System Utilities.

7. If changes were made and saved, the server prompts for reboot request. Press **Enter** to confirm reboot.

   If the following actions were performed, the server reboots a second time without user input. During this reboot, the TPM setting becomes effective.

   - Changing from TPM 1.2 and TPM 2.0
   - Changing TPM bus from FIFO to CRB
   - Enabling or disabling TPM
   - Clearing the TPM

8. Enable TPM functionality in the OS, such as Microsoft Windows BitLocker or measured boot.

   For more information, see the **Microsoft website**.

Enabling the Trusted Platform Module as TPM 1.2

About this task

Procedure

1. From the boot screen, press **F9** to access the UEFI System Utilities.
2. From the **System Utilities** screen, select **System Configuration > BIOS/Platform Configuration (RBSU) > Server Security > Trusted Platform Module options**.
3. Change the **TPM Mode Switch Operation** to **TPM 1.2**.
4. Verify that "TPM Visibility" is set to **Visible**.
5. Press **F10** to save your selection.
6. When prompted to save the change in System Utilities, do one of the following:
   - If in graphical mode, click **Yes**.
   - If in text mode, press the **Y** key.
7. Press **Esc** to exit System Utilities.

   The server reboots a second time without user input. During this reboot, the TPM setting becomes effective.

8. Enable TPM functionality in the OS, such as Microsoft Windows BitLocker or measured boot.

For more information, see the **Microsoft website**.

Retaining the BitLocker recovery key/password

The recovery key/password is generated during BitLocker setup, and can be saved and printed after BitLocker is enabled. When using BitLocker, always retain the recovery key/password. The recovery key/password is required to enter Recovery Mode after BitLocker detects a possible compromise of system integrity.

To help ensure maximum security, observe the following guidelines when retaining the recovery key/password:

- Always store the recovery key/password in multiple locations.
- Always store copies of the recovery key/password away from the server.
- Do not save the recovery key/password on the encrypted hard drive.

Cabling

Subtopics

Cabling guidelines
Node power button cabling
Storage cabling
Pump-cold plate signal cabling

Cabling guidelines

The cabling diagrams in this chapter used different colors to better differentiate one cable from another for illustration clarity. Most of the system cables are actually black.

Observe the following guidelines when working with system cables.

Before connecting cables

- Note the port labels on the PCA components. Not all these components are used by all systems:
  - System board ports
  - Drive and power supply backplane ports

    - Expansion card ports (controllers, adapters, expanders, risers, and similar boards)

- Note the label near each cable connector. This label indicates the destination port for the cable connector.
- Some data cables are prebent. Do not unbend or manipulate the cables.
- To prevent mechanical damage or depositing oil that is present on your hands, and other contamination, do not touch the ends of the connectors.

When connecting cables

- Before connecting a cable to a port, lay the cable in place to verify the length of the cable.
- Use the internal cable management features to properly route and secure the cables.
- When routing cables, be sure that the cables are not in a position where they can be pinched or crimped.
- Avoid tight bend radii to prevent damaging the internal wires of a power cord or a server cable. Never bend power cords and server cables tight enough to cause a crease in the sheathing.
- Make sure that the excess length of cables is properly secured to avoid excess bends, interference issues, and airflow restriction.
- To prevent component damage and potential signal interference, make sure that all cables are in their appropriate routing position before installing a new component and before closing up the server.

When disconnecting cables

- Grip the body of the cable connector. Do not pull on the cable itself because this action can damage the internal wires of the cable or the pins on the port.

- If a cable does not disconnect easily, check for any release latch that must be pressed to disconnect the cable.

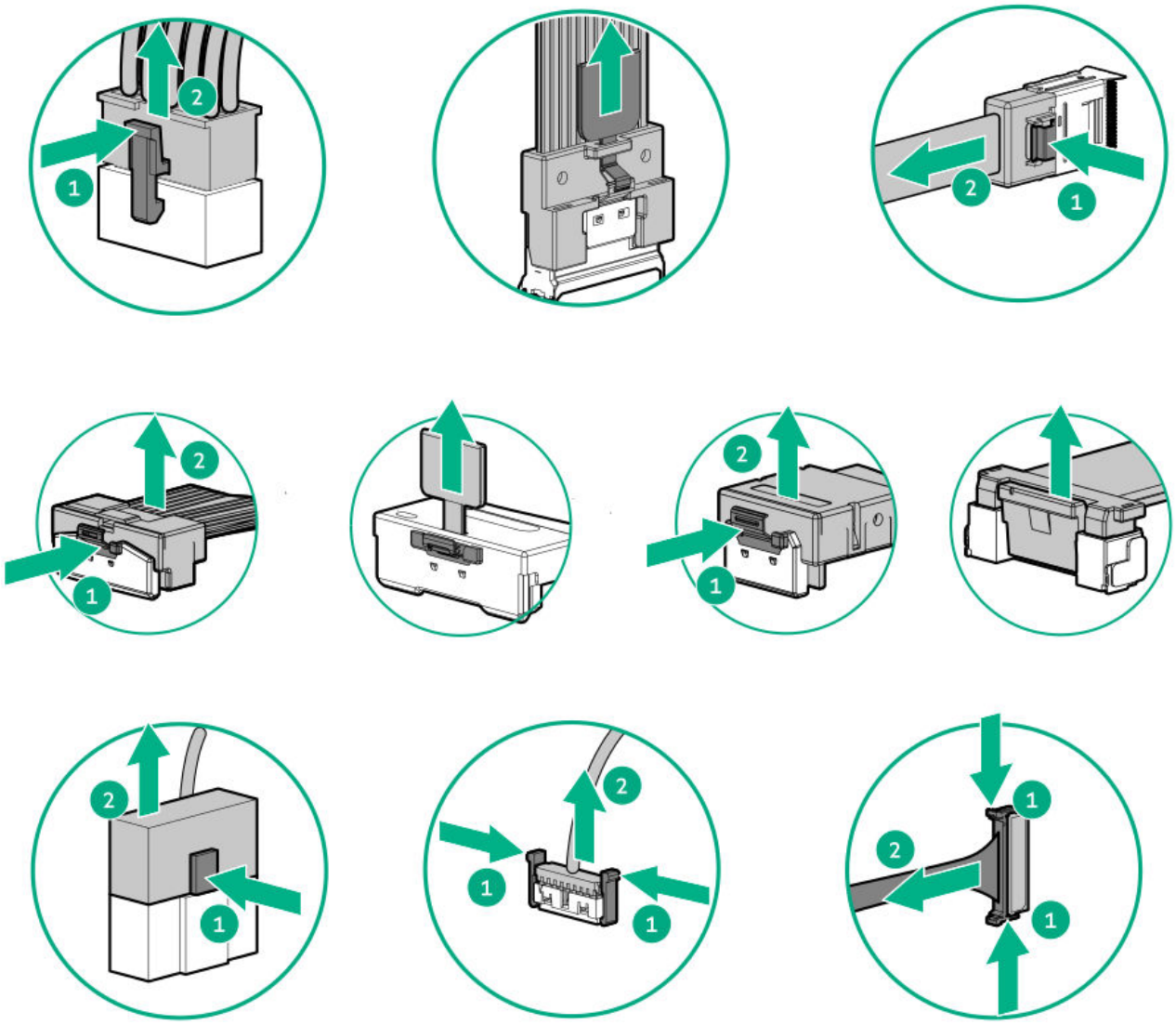

- Remove cables that are no longer being used. Retaining them inside the system can restrict airflow. If you intend to use the removed cables later, label and store them for future use.

Node power button cabling

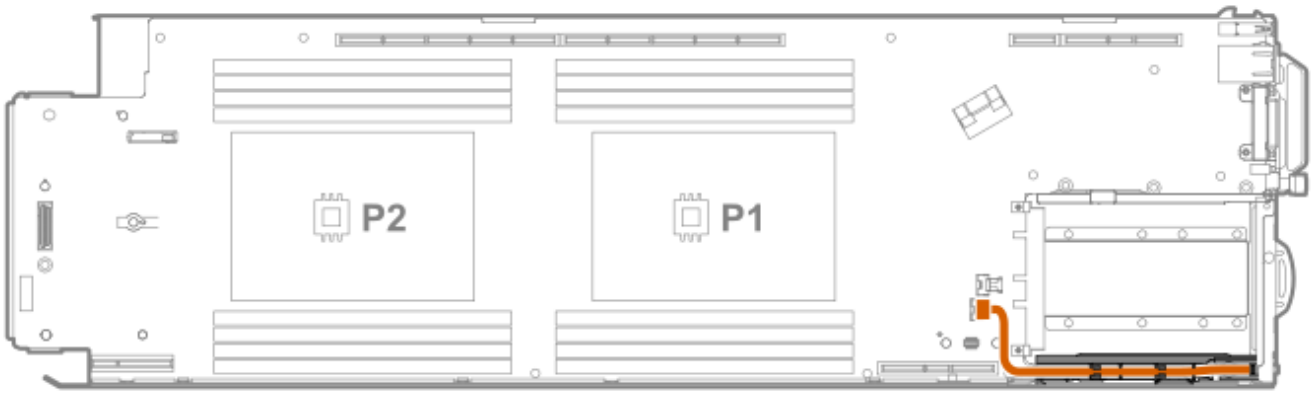

Storage cabling

Subtopics

Onboard SATA controller cabling
HPE Smart Array type-p controller cabling
Storage controller backup power cabling

Onboard SATA controller cabling

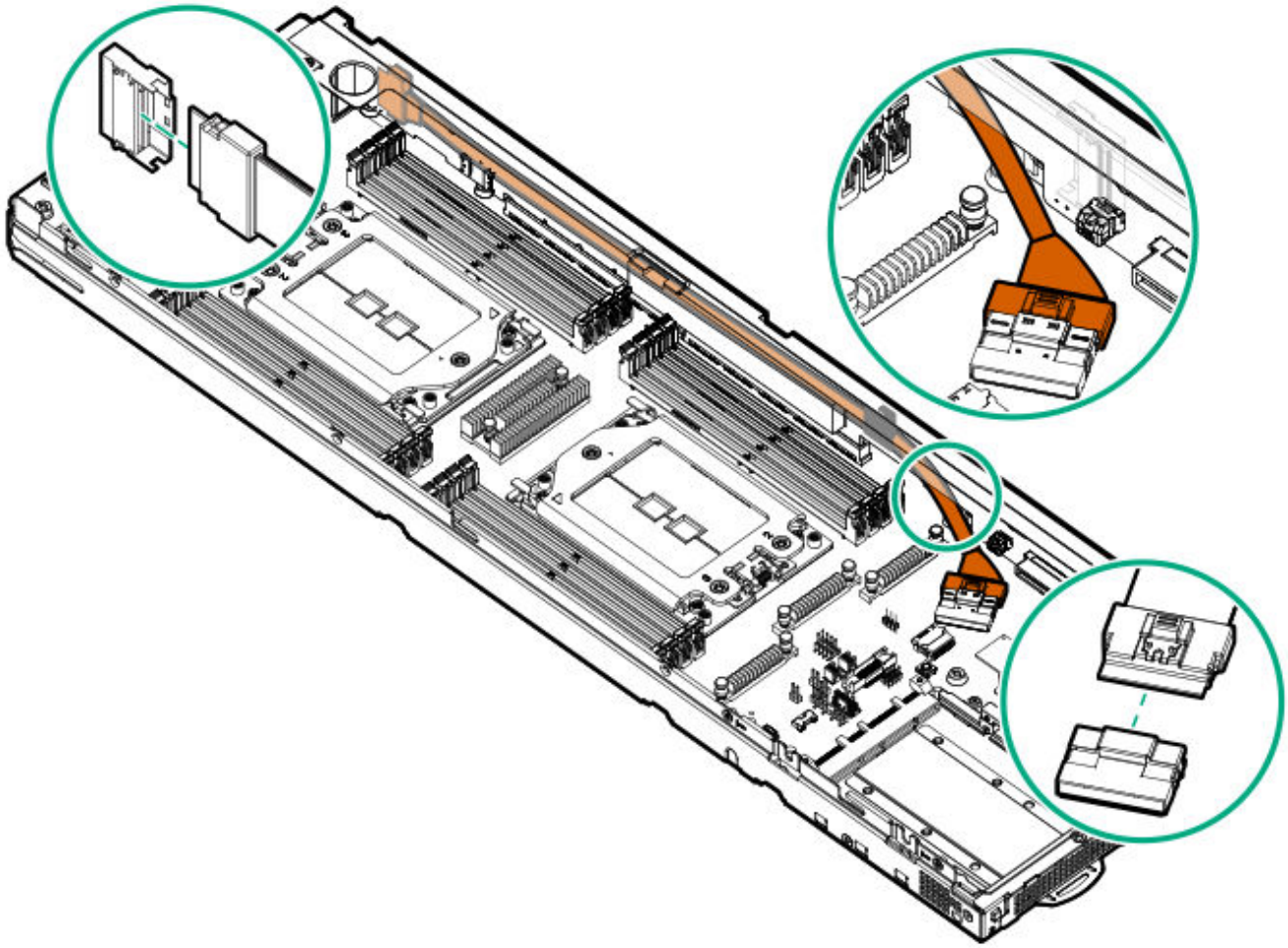

HPE Smart Array type-p controller cabling

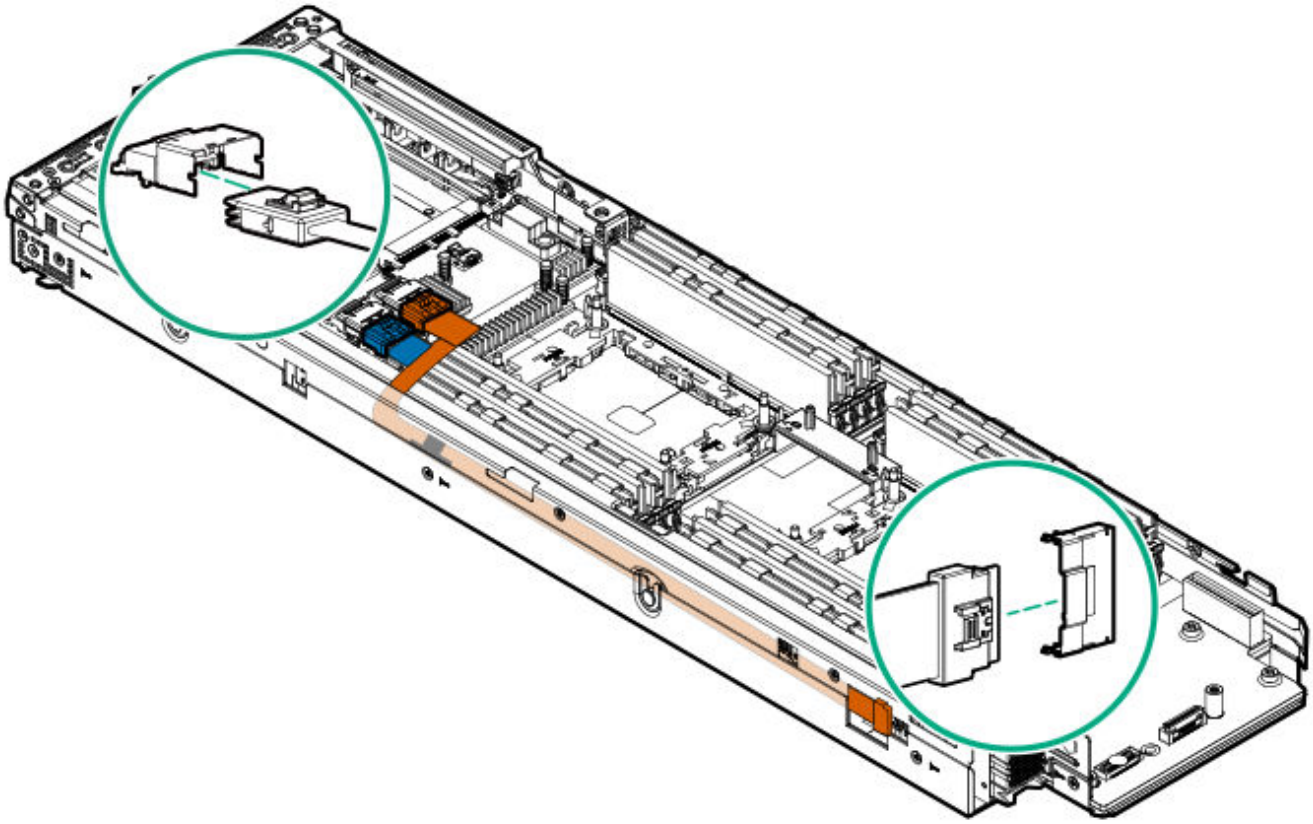

Storage controller backup power cabling

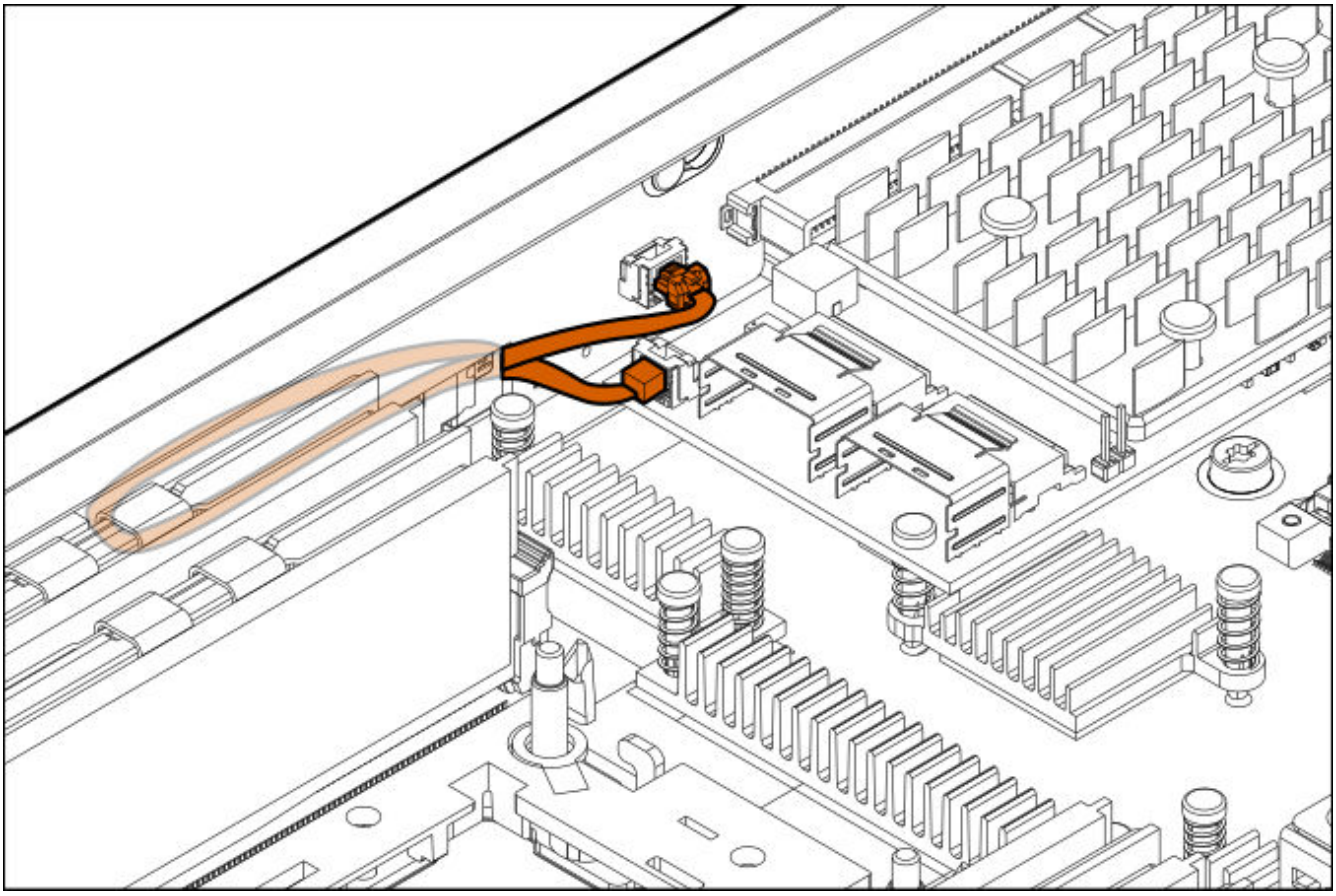

Pump-cold plate signal cabling

Subtopics

Pump-cold plate signal cabling: Processor cooling loop
Pump-cold plate signal cabling: DIMM-processor cooling loop

Pump-cold plate signal cabling: Processor cooling loop

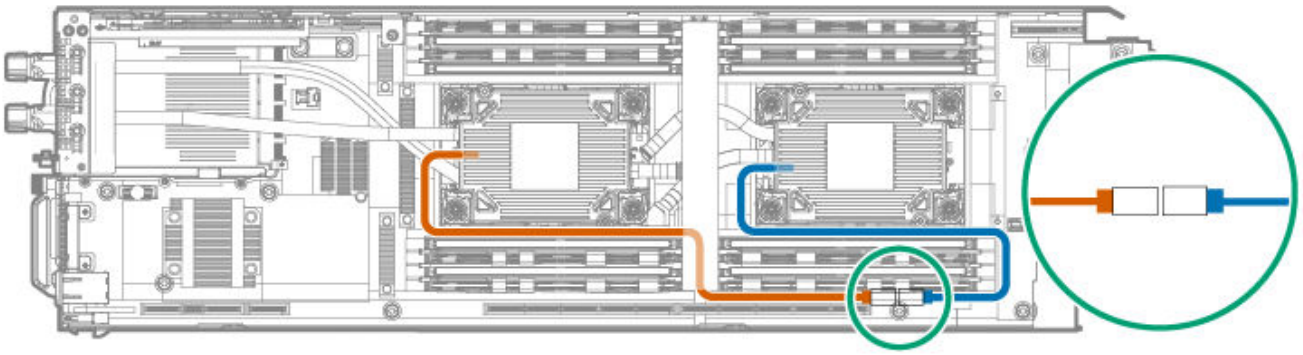

Item	Description
Orange	Pump-cold plate signal cable for processor 1
Blue	Pump-cold plate signal cable for processor 2

Pump-cold plate signal cabling: DIMM-processor cooling loop

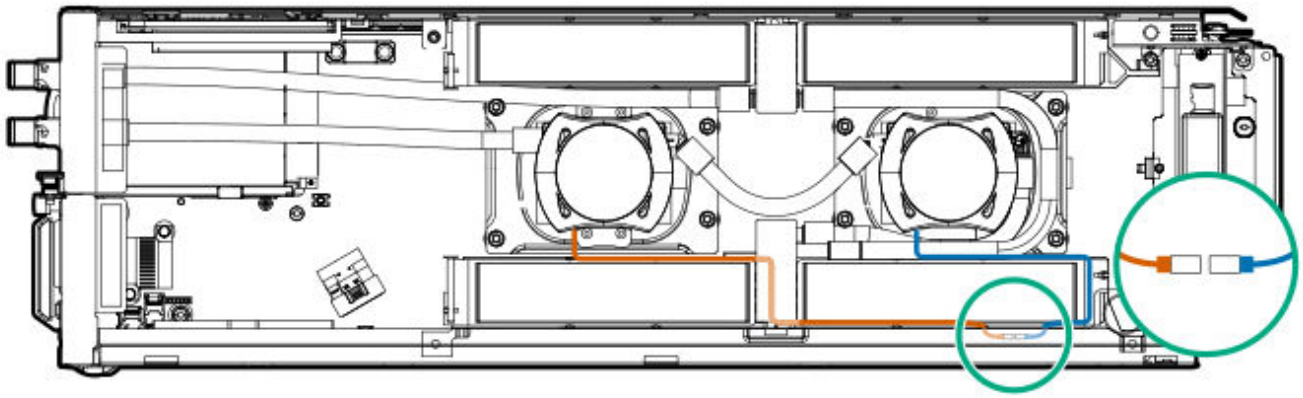

Item	Description
Orange	Pump-cold plate signal cable for processor 1
Blue	Pump-cold plate signal cable for processor 2

Software and configuration utilities

Subtopics

Server mode
iLO
Integrated Management Log
Intelligent Provisioning
Management security
Scripting Toolkit for Windows and Linux
Bright Cluster Manager
UEFI System Utilities
Smart Storage Administrator
HPE InfoSight for servers
USB support
Redundant ROM support
Keeping the system current

Server mode

The software and configuration utilities presented in this section operate in online mode, offline mode, or in both modes.

Software or configuration utility	Server mode
#GUID-D7147C7F-2016-0901-06D0-000000001A72	Online and Offline
iLO	Online and Offline
Smart Storage Administrator	Online and Offline
GUID-5284E08F-722A-4E3C-806B-A23F15F4BDF0.html#GUID-5284E08F-722A-4E3C-806B-A23F15F4BDF0	Online and Offline
Intelligent Provisioning	Online and Offline
Scripting Toolkit for Windows and Linux	Online

Software or configuration utility	Server mode
Service Pack for ProLiant	Online and Offline
Introduction to Smart Update Manager	Online and Offline
UEFI System Utilities	Offline

iLO

iLO 5 is a remote server management processor embedded on the system boards of supported HPE servers and compute modules. iLO enables the monitoring and controlling of servers from remote locations. iLO management is a powerful tool that provides multiple ways to configure, update, monitor, and repair servers remotely.

For more information about iLO, see the iLO user guide at the following website: **https://www.hpe.com/support/ilo-docs**.

Subtopics

iLO Federation
GUID-5284E08F-722A-4E3C-806B-A23F15F4BDF0.html
RESTful Interface Tool
iLO Amplifier Pack

iLO Federation

iLO Federation enables you to manage multiple servers from one system using the iLO web interface.

When configured for iLO Federation, iLO uses multicast discovery and peer-to-peer communication to enable communication between the systems in iLO Federation groups.

When you navigate to one of the iLO Federation pages, a data request is sent from the iLO system running the web interface to its peers, and from those peers to other peers until all data for the selected iLO Federation group is retrieved.

iLO supports the following features:

- Group health status—View server health and model information.
- Group virtual media—Connect URL-based media for access by a group of servers.
- Group power control—Manage the power status of a group of servers.

- Group firmware update—Update the firmware of a group of servers.
- Group license installation—Enter a license key to activate iLO licensed features on a group of servers.
- Group configuration—Add iLO Federation group memberships for multiple iLO systems.

Any user can view information on iLO Federation pages, but a license is required for using the following features: Group virtual media, Group power control, Group power capping, Group configuration, and Group firmware update.

For more information about iLO Federation, see the iLO user guide at the following website: **https://www.hpe.com/support/ilo-docs**.

RESTful Interface Tool

The RESTful Interface Tool (iLOREST) is a scripting tool that allows you to automate HPE server management tasks. It provides a set of simplified commands that take advantage of the iLO RESTful API. You can install the tool on your computer for remote use or install it locally on a server with a Windows or Linux Operating System. The RESTful Interface Tool offers an interactive mode, a scriptable mode, and a file-based mode similar to CONREP to help decrease automation times.

For more information, see the following website: **https://www.hpe.com/info/resttool**.

iLO Amplifier Pack

iLO Amplifier Pack is an advanced server inventory, firmware and driver update solution that enables rapid discovery, detailed inventory reporting, firmware, and driver updates by leveraging iLO advanced functionality. iLO Amplifier Pack performs rapid server discovery and inventory for thousands of supported servers for the purpose of updating firmware and drivers at scale.

> **IMPORTANT:** The iLO Federation groups functionality to be discontinued from iLO Amplifier Pack 2.20 release.

For more information about iLO Amplifier Pack, see the iLO Amplifier Pack User Guide at the following website: **https://www.hpe.com/support/ilo-ap-ug-en**.

Integrated Management Log

The IML records hundreds of events and stores them in an easy-to-view form. The IML timestamps each event with one-minute granularity.

You can view recorded events in the IML in several ways, including the following:

- From within HPE SIM
- From within the UEFI System Utilities
- From within the Embedded UEFI shell
- From within the iLO web interface

Intelligent Provisioning

Intelligent Provisioning is a single-server deployment tool embedded in ProLiant servers and HPE Synergy compute modules. Intelligent Provisioning simplifies server setup, providing a reliable and consistent way to deploy servers.

Intelligent Provisioning prepares the system for installing original, licensed vendor media and Hewlett Packard Enterprise-branded versions of OS software. Intelligent Provisioning also prepares the system to integrate optimized server support software from the Service Pack for ProLiant (SPP). SPP is a comprehensive systems software and firmware solution for ProLiant servers, server blades, and their enclosures. The same solution for HPE Synergy compute modules is now called Synergy Service Pack (SSP). These components are preloaded with a basic set of firmware and OS components that are installed along with Intelligent Provisioning.



IMPORTANT:

HPE Synergy servers do not support OS installation with Intelligent Provisioning, but they do support the maintenance features. For more information, see "Performing Maintenance" in the Intelligent Provisioning user guide and online help.

After the server is running, you can update the firmware to install additional components. You can also update any components that have been outdated since the server was manufactured.

To access Intelligent Provisioning:

- Press **F10** from the POST screen and enter Intelligent Provisioning.

- From the iLO web interface, using **Lifecycle Management**. **Lifecycle Management** allows you to access Intelligent Provisioning without rebooting your server.

NOTE:

1. HPE ProLiant RL3xx Gen 11 platforms do not support Intelligent Provisioning through both F10 and Lifecycle Management.
2. HPE Gen11 platforms running OpenBMC do not support Intelligent Provisioning.

Management security

Hewlett Packard Enterprise Gen10 and Gen10 Plus servers and compute modules are built with some of the industry's most advanced security capabilities, out of the box, with a foundation of secure embedded management applications and firmware. The management security provided by HPE embedded management products enables secure support of modern workloads, protecting your components from unauthorized access and unapproved use. The range of embedded management and optional software and firmware available with the iLO Advanced license provides security features that help ensure protection, detection, and recovery from advanced cyber attacks.

For more information, see the HPE Gen10 and Gen10 Plus Security Reference Guide at **https://www.hpe.com/info/server-security-reference-en**.

Scripting Toolkit for Windows and Linux

The STK for Windows and Linux is a server deployment product that delivers an unattended automated installation for high-volume server deployments. The STK is designed to support ProLiant servers. The toolkit includes a modular set of utilities and important documentation that describes how to apply these tools to build an automated server deployment process.

The STK provides a flexible way to create standard server configuration scripts. These scripts are used to automate many of the manual steps in the server configuration process. This automated server configuration process cuts time from each deployment, making it possible to scale rapid, high-volume server deployments.

For more information or to download the STK, see the **Hewlett Packard Enterprise website**.

Bright Cluster Manager

Bright Cluster Manager enables system administrators to quickly deploy clusters over bare metal and keep them running reliably throughout their life cycle with the ease and elegance of a fully featured, enterprise-grade cluster manager. The software provides a single view for managing hardware, the operating system, the HPC software, and users.

For more information, see the product QuickSpecs at the Hewlett Packard Enterprise website (**https://www.hpe.com/info/qs**). For user documentation, see the Bright Computing website (**https://www.brightcomputing.com/documentation**).

UEFI System Utilities

The UEFI System Utilities is embedded in the system ROM. Its features enable you to perform a wide range of configuration activities, including:

- Configuring system devices and installed options.
- Enabling and disabling system features.
- Displaying system information.
- Selecting the primary boot controller or partition.
- Configuring memory options.
- Launching other preboot environments.

HPE servers with UEFI can provide:

- Support for boot partitions larger than 2.2 TB. Such configurations could previously only be used for boot drives when using RAID solutions.
- Secure Boot that enables the system firmware, option card firmware, operating systems, and software collaborate to enhance platform security.
- UEFI Graphical User Interface (GUI)
- An Embedded UEFI Shell that provides a preboot environment for running scripts and tools.
- Boot support for option cards that only support a UEFI option ROM.

Subtopics

Selecting the boot mode
Secure Boot
Launching the Embedded UEFI Shell

Selecting the boot mode

About this task

This server provides two **Boot Mode** configurations: UEFI Mode and Legacy BIOS Mode. Certain boot options require that you select a specific boot mode. By default, the boot mode is set to **UEFI Mode**. The system must boot in **UEFI Mode** to use certain options, including:

- Secure Boot, UEFI Optimized Boot, Generic USB Boot, IPv6 PXE Boot, iSCSI Boot, NVMe Boot and Boot from URL
- Fibre Channel/FCoE Scan Policy



NOTE:

The boot mode you use must match the operating system installation. If not, changing the boot mode can impact the ability of the server to boot to the installed operating system.

Prerequisite

When booting to **UEFI Mode**, leave **UEFI Optimized Boot** enabled.

Procedure

1. From the **System Utilities** screen, select **System Configuration > BIOS/Platform Configuration (RBSU) > Boot Options > Boot Mode**.
2. Select a setting.
   - **UEFI Mode** (default)—Configures the system to boot to a UEFI compatible operating system.
   - **Legacy BIOS Mode**—Configures the system to boot to a traditional operating system in Legacy BIOS compatibility mode.
3. Save your setting.
4. Reboot the server.

Secure Boot

Secure Boot is a server security feature that is implemented in the BIOS and does not require special hardware. Secure Boot ensures that each component launched during the boot process is digitally signed

and that the signature is validated against a set of trusted certificates embedded in the UEFI BIOS. Secure Boot validates the software identity of the following components in the boot process:

- UEFI drivers loaded from PCIe cards
- UEFI drivers loaded from mass storage devices
- Preboot UEFI Shell applications
- OS UEFI boot loaders

When Secure Boot is enabled:

- Firmware components and operating systems with boot loaders must have an appropriate digital signature to execute during the boot process.
- Operating systems must support Secure Boot and have an EFI boot loader signed with one of the authorized keys to boot. For more information about supported operating systems, see **https://www.hpe.com/servers/ossupport**.

You can customize the certificates embedded in the UEFI BIOS by adding or removing your own certificates, either from a management console directly attached to the server, or by remotely connecting to the server using the iLO Remote Console.

You can configure Secure Boot:

- Using the **System Utilities** options described in the following sections.
- Using the iLO RESTful API to clear and restore certificates. For more information, see the Hewlett Packard Enterprise website (**https://www.hpe.com/info/redfish**).
- Using the `secboot` command in the Embedded UEFI Shell to display Secure Boot databases, keys, and security reports.

Launching the Embedded UEFI Shell

Prerequisites

- **Embedded UEFI Shell** is set to **Enabled**.

About this task

Use the **Embedded UEFI Shell** option to launch the Embedded UEFI Shell. The Embedded UEFI Shell is a preboot command-line environment for scripting and running UEFI applications, including UEFI boot loaders. The Shell also provides CLI-based commands you can use to obtain system information, and to configure and update the system BIOS.

Procedure

1. From the **System Utilities** screen, select **Embedded Applications > Embedded UEFI Shell**.

   The **Embedded UEFI Shell** screen appears.

2. Press any key to acknowledge that you are physically present.

   This step ensures that certain features, such as disabling **Secure Boot** or managing the **Secure Boot** certificates using third-party UEFI tools, are not restricted.

3. If an administrator password is set, enter it at the prompt and press **Enter**.

   The `Shell>` prompt appears.

4. Enter the commands required to complete your task.

5. Enter the `exit` command to exit the Shell.

Smart Storage Administrator

Smart Storage Administrator (SSA) is the main tool for configuring arrays on these controllers. It exists in three interface formats: the SSA GUI, the SSA CLI, and SSA Scripting. All these formats provide support for configuration tasks. Some of the advanced tasks are available in only one format.

Smart Storage Administrator GUI

SSA GUI is an advanced utility that enables you to perform many complex configuration tasks. The SSA GUI is accessible both offline and online:

- **Accessing SSA in the offline environment:** Using one of multiple methods, you can run SSA before launching the host OS. In offline mode, users can configure or maintain detected and supported HPE ProLiant devices, such as optional controllers and integrated controllers. Some SSA features are only available in the offline environment, such as setting the boot controller or performing split-mirror operations.
- **Accessing SSA in the online environment:** This method requires an administrator to download the SSA executables and install them. You can run SSA online after launching the host OS.

For more information, see **HPE Smart Storage Administrator User Guide**

Smart Storage Administrator CLI (SSA CLI)

SSA CLI is a command line interface tool used to manage HPE SR Storage Controller products. The storage CLI tool support scripting for mass deployment of server storage.

For more information, see **HPE Smart Storage Administrator CLI User Guide**

Smart Storage Administrator Scripting

SSA Scripting is a standalone application that is distributed with the HPE SSA CLI application and is used for configuring arrays on Smart Array devices.

HPE InfoSight for servers

The HPE InfoSight portal is a secure web interface hosted by HPE that allows you to monitor supported devices through a graphical interface.

HPE InfoSight for servers:

- Combines the machine learning and predictive analytics of HPE InfoSight with the health and performance monitoring of Active Health System (AHS) and HPE iLO to optimize performance and predict and prevent problems
- Provides automatic collection and analysis of the sensor and telemetry data from AHS to derive insights from the behaviors of the install base to provide recommendations to resolve problems and improve performance

For more information on getting started and using HPE InfoSight for Servers, go to: **https://www.hpe.com/info/infosight-servers-docs**.

HPE InfoSight for Servers do not support HPE ProLiant RL3xx Gen 11 platforms.

USB support

Hewlett Packard Enterprise Gen10 and Gen10 Plus servers support all USB operating speeds depending on the device that is connected to the server.

Subtopics

External USB functionality

External USB functionality

Hewlett Packard Enterprise provides external USB support to enable local connection of USB devices for server administration, configuration, and diagnostic procedures.

For additional security, external USB functionality can be disabled through USB options in UEFI System Utilities.

Redundant ROM support

The server enables you to upgrade or configure the ROM safely with redundant ROM support. The server has a single ROM that acts as two separate ROM images. In the standard implementation, one side of the ROM contains the current ROM program version, while the other side of the ROM contains a backup version.

NOTE: The server ships with the same version programmed on each side of the ROM.

Subtopics

Safety and security benefits

Safety and security benefits

When you flash the system ROM, the flashing mechanism writes over the backup ROM and saves the current ROM as a backup, enabling you to switch easily to the alternate ROM version if the new ROM becomes corrupted for any reason. This feature protects the existing ROM version, even if you experience a power failure while flashing the ROM.

Keeping the system current

Subtopics

Updating firmware or system ROM
Drivers
Software and firmware
Operating system version support
HPE Pointnext Portfolio
Proactive notifications

Updating firmware or system ROM

About this task

To update firmware or system ROM, use one of the following methods:

- The **Firmware Update** option in the System Utilities.
- The `fwupdate` command in the **Embedded UEFI Shell**.
- Service Pack for ProLiant (SPP)
- HPE online flash components
- Moonshot Component Pack

Subtopics

Service Pack for ProLiant
Updating firmware from the System Utilities
Updating the firmware from the UEFI Embedded Shell
Online Flash components

Service Pack for ProLiant

SPP is a systems software and firmware solution delivered as a single ISO file download. This solution uses SUM as the deployment tool and is tested and supports HPE ProLiant, HPE BladeSystem, HPE Synergy, and HPE Apollo servers and infrastructure.

SPP, along with SUM and iSUT, provides Smart Update system maintenance tools that systematically update HPE ProLiant, HPE BladeSystem, HPE Synergy, and HPE Apollo servers and infrastructure.

SPP can be used in an online mode on a server running Windows, Linux, or VMware vSphere ESXi, or in an offline mode where the server is booted to an operating system included in the ISO file.

The preferred method for downloading an SPP is using the SPP Custom Download at **https://www.hpe.com/servers/spp/custom**.

Subtopics

Introduction to Smart Update Manager
Integrated Smart Update Tools

Introduction to Smart Update Manager

SUM is an innovative tool for maintaining and updating the firmware, drivers, and system software of HPE ProLiant, HPE BladeSystem, HPE Synergy, HPE Superdome Flex servers, HPE Edgeline and HPE Apollo servers, infrastructure, and associated options.

SUM identifies associated nodes that you can update at the same time to avoid interdependency issues.

The Key features of SUM include:

- Discovery engine that finds installed versions of hardware, firmware, and software on nodes.
- SUM deploys updates in the correct order and ensures that all dependencies are met before deploying an update.
- Interdependency checking.
- Automatic and step-by-step Localhost Guided Update process.
- Web browser-based user interface.
- Ability to create custom baselines and ISOs.
- Support for iLO Repository (Gen10/iLO5 and later nodes only).
- Simultaneous firmware and software deployment for multiple remote nodes.
- Local offline firmware deployments with SPP deliverables.
- Extensive logging in all modes.



NOTE:

Support for HPE Integrity servers has been discontinued from SUM 8.x.

Integrated Smart Update Tools

Integrated Smart Update Tools (iSUT) is the smart update solution for performing online firmware and driver updates. iSUT is used with iLO 5, iLO6 and with update solutions (management appliances such as iLO Amplifier Pack or HPE OneView or Compute Ops Management and Smart Update Manager) to stage, install, and activate firmware and driver updates.

The solution must be installed on the OS, where it updates results through Rich Infrastructure Services (RIS) communication.

- **iSUT**: Polls iLO to check for requests from SUM, iLO Amplifier Pack, HPE OneView or Compute Ops Management for updates through local iLO using the iLO channel interface driver installed on the OS

and orchestrates staging, deploying, and activating updates. You can adjust the polling interval by issuing the appropriate command-line option provided by iSUT. Performs inventory on target servers, stages deployment, deploys updates, and then reboots the servers.

- **iLO 5 / iLO6 with integrated Smart Update** (Gen10 or later servers only): Performs iLO Repository-based updates by downloading the components from iLO Repository when iLO Installation Queue has the components which can be updated by iSUT.
- **iLO Amplifier Pack and HPE OneView**: Displays available updates for servers. Communicates with iSUT (or iSUT 1.x) to initiate updates using the iLO Redfish interface. iSUT reports the status of updates to iLO Amplifier Pack through iLO Restful Interface.
- **SUM**: A tool for firmware and driver maintenance for HPE ProLiant servers and associated options.



NOTE:

SUM and iLO Amplifier Pack should not manage the same nodes.

Updating firmware from the System Utilities

About this task

Use the **Firmware Updates** option to update firmware components in the system, including the system BIOS, NICs, and storage cards.

Procedure

1. Access the System ROM Flash Binary component for your server from the Hewlett Packard Enterprise Support Center.
2. Copy the binary file to a USB media or iLO virtual media.
3. Attach the media to the server.
4. Launch the **System Utilities**, and select **Embedded Applications > Firmware Update**.
5. Select a device.

   The **Firmware Updates** screen lists details about your selected device, including the current firmware version in use.
6. Select **Select Firmware File**.
7. Select the flash file in the **File Explorer** list.

The firmware file is loaded and the **Firmware Updates** screen lists details of the file in the **Selected firmware file** field.

8. Select **Image Description**, and then select a firmware image.

   A device can have multiple firmware images.

9. Select **Start firmware update**.

Updating the firmware from the UEFI Embedded Shell

Procedure

1. Access the System ROM Flash Binary component for your server from the Hewlett Packard Enterprise Support Center (**https://www.hpe.com/support/hpesc**).
2. Copy the binary file to a USB media or iLO virtual media.
3. Attach the media to the server.
4. Boot to the UEFI Embedded Shell.
5. To obtain the assigned file system volume for the USB key, enter `map -r`.
6. Change to the file system that contains the System ROM Flash Binary component for your server. Enter one of the `fsx` file systems available, such as `fs0:` or `fs1:`, and press **Enter**.
7. Use the `cd` command to change from the current directory to the directory that contains the binary file.
8. Flash the system ROM by entering `fwupdate -d BIOS -f filename`.
9. Reboot the server. A reboot is required after the firmware update in order for the updates to take effect and for hardware stability to be maintained.

Online Flash components

This component provides updated system firmware that can be installed directly on supported operating systems. Additionally, when used in conjunction with SUM, this Smart Component allows the user to update firmware on remote servers from a central location. This remote deployment capability eliminates the need for the user to be physically present at the server to perform a firmware update.

Drivers

IMPORTANT: Always perform a backup before installing or updating device drivers.

Update drivers using any of the following **Smart Update Solutions**:

- Download the latest Service Pack for ProLiant (includes Smart Update Manager)
- Create a custom SPP download
- Download Smart Update Manager for Linux
- Download specific drivers
  To locate the drivers for a server, go to the **Hewlett Packard Enterprise Support Center website**, and then search for the product name/number.

Software and firmware

Update software and firmware before using the server for the first time, unless any installed software or components require an older version.

For system software and firmware updates, use one of the following sources:

- Download the SPP from the Hewlett Packard Enterprise website (**https://www.hpe.com/servers/spp/download**).
- Download individual drivers, firmware, or other system software components from the server product page in the Hewlett Packard Enterprise Support Center website (**https://www.hpe.com/support/hpesc**).

Operating system version support

For information about specific versions of a supported operating system, refer to the **operating system support matrix**.

HPE Pointnext Portfolio

HPE Pointnext delivers confidence, reduces risk, and helps customers realize agility and stability. Hewlett Packard Enterprise helps customers succeed through Hybrid IT by simplifying and enriching the on-premise experience, informed by public cloud qualities and attributes.

Operational Support Services enable you to choose the right service level, length of coverage, and response time to fit your business needs. For more information, see the Hewlett Packard Enterprise website:

https://www.hpe.com/us/en/services/operational.html

Utilize the Advisory and Transformation Services in the following areas:

- Private or hybrid cloud computing
- Big data and mobility requirements
- Improving data center infrastructure
- Better use of server, storage, and networking technology

For more information, see the Hewlett Packard Enterprise website:

https://www.hpe.com/services/consulting

Proactive notifications

30 to 60 days in advance, Hewlett Packard Enterprise sends notifications to subscribed customers on upcoming:

- Hardware, firmware, and software changes
- Bulletins
- Patches
- Security alerts

You can subscribe to proactive notifications on the **https://www.hpe.com/support/hpesc**.

Troubleshooting

Subtopics

NMI functionality
Troubleshooting resources

NMI functionality

An NMI crash dump enables administrators to create crash dump files when a system is not responding to traditional debugging methods.

An analysis of the crash dump log is an essential part of diagnosing reliability problems, such as hanging operating systems, device drivers, and applications. Many crashes freeze a system, and the only available action for administrators is to cycle the system power. Resetting the system erases any information that could support problem analysis, but the NMI feature preserves that information by performing a memory dump before a hard reset.

To force the OS to initiate the NMI handler and generate a crash dump log, the administrator can use the iLO Generate NMI feature.

Troubleshooting resources

Troubleshooting resources are available for HPE Gen10 and Gen10 Plus server products in the following documents:

- Troubleshooting Guide for HPE ProLiant Gen10 and Gen10 Plus servers provides procedures for resolving common problems and comprehensive courses of action for fault isolation and identification, issue resolution, and software maintenance.
- Integrated Management Log Messages and Troubleshooting Guide for HPE ProLiant Gen10 and Gen10 Plus servers and HPE Synergy provides IML messages and associated troubleshooting information to resolve critical and cautionary IML events.

To access troubleshooting resources for your product, see the **Hewlett Packard Enterprise website**.

Safety, warranty, and regulatory information

Subtopics

Regulatory information
Warranty information

Regulatory information

To view the regulatory information for your product, view the Safety and Compliance Information for Server, Storage, Power, Networking, and Rack Products, available at the Hewlett Packard Enterprise Support Center:

https://www.hpe.com/support/Safety-Compliance-EnterpriseProducts

Additional regulatory information

Hewlett Packard Enterprise is committed to providing our customers with information about the chemical substances in our products as needed to comply with legal requirements such as REACH (Regulation EC No 1907/2006 of the European Parliament and the Council). A chemical information report for this product can be found at:

https://www.hpe.com/info/reach

For Hewlett Packard Enterprise product environmental and safety information and compliance data, including RoHS and REACH, see:

https://www.hpe.com/info/ecodata

For Hewlett Packard Enterprise environmental information, including company programs, product recycling, and energy efficiency, see:

https://www.hpe.com/info/environment

Subtopics

Notices for Eurasian Economic Union
Turkey RoHS material content declaration
Ukraine RoHS material content declaration

Notices for Eurasian Economic Union

EAC

Manufacturer and Local Representative Information

Manufacturer information:

Hewlett Packard Enterprise Company, 1701 E Mossy Oaks Road, Spring, TX 77389 U.S.

Local representative information Russian:

- **Russia**

ООО "Хьюлетт Паккард Энтерпрайз", Российская Федерация, 125171, г. Москва, Ленинградское шоссе, 16А, стр.3, Телефон: +7 499 403 4248 Факс: +7 499 403 4677

- **Kazakhstan**
  ТОО «Хьюлетт-Паккард (К)», Республика Казахстан, 050040, г. Алматы, Бостандыкский район, проспект Аль-Фараби, 77/7, Телефон/факс: + 7 727 355 35 50

Local representative information Kazakh:

- **Russia**
  ЖШС "Хьюлетт Паккард Энтерпрайз", Ресей Федерациясы, 125171, Мәскеу, Ленинград тас жолы, 16А блок 3, Телефон: +7 499 403 4248 Факс: +7 499 403 4677

- **Kazakhstan**
  ЖШС «Хьюлетт-Паккард (К)», Қазақстан Республикасы, 050040, Алматы к., Бостандык ауданы, Әл-Фараби даңғ ылы, 77/7, Телефон/факс: +7 727 355 35 50

Manufacturing date:

The manufacturing date is defined by the serial number.

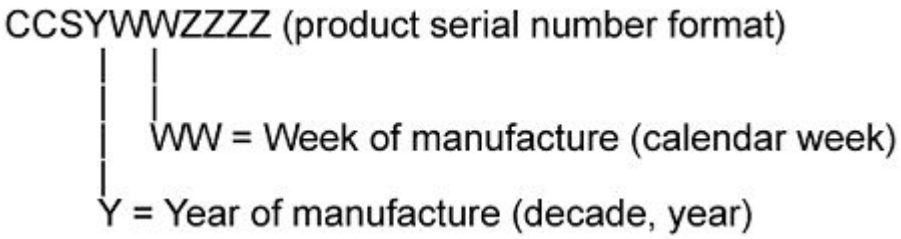

If you need help identifying the manufacturing date, contact **tre@hpe.com**.

Turkey RoHS material content declaration

Türkiye Cumhuriyeti: AEEE Yönetmeliğine Uygundur

Ukraine RoHS material content declaration

Обладнання відповідає вимогам Технічного регламенту щодо обмеження використання деяких небезпечних речовин в електричному та електронному обладнанні, затвердженого постановою Кабінету Міністрів України від 3 грудня 2008 № 1057

Warranty information

To view the warranty information for your product, see the **warranty check tool**.

System battery replacement

Subtopics

Removing and replacing the system battery

Removing and replacing the system battery

About this task

WARNING:

The server contains an internal lithium manganese dioxide, a vanadium pentoxide, or an alkaline battery that provides power to the real-time clock. If this battery is not properly handled, a risk of the fire and burns exists. To reduce the risk of personal injury:

- Do not attempt to recharge the battery.
- Do not expose the battery to temperatures higher than 60°C (140°F).
- Do not expose the battery to extremely low air pressure as it might lead to explosion or leakage of flammable liquid or gas.
- Do not disassemble, crush, puncture, short external contacts, or dispose the battery in fire or water.

If the server no longer automatically displays the correct date and time, then replace the battery that provides power to the real-time clock. Under normal use, battery life is 5 to 10 years.

Procedure

1. Power down the server.
2. If installed, disconnect the tube set.
3. Disconnect all peripheral cables from the server.
4. Remove the server.
5. Place the server on a flat, level work surface.
6. Remove the node cover.
7. Locate the battery on the system board.
8. Slightly push the metal tab, and then remove the system battery from the socket.

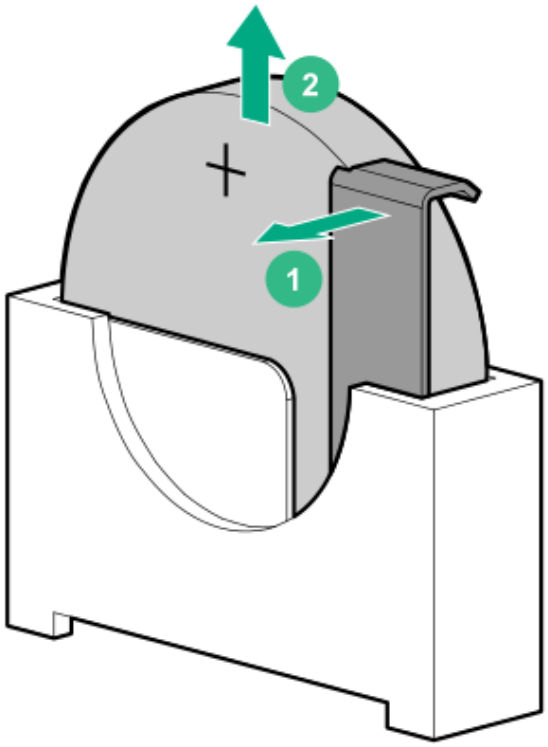

9. Slightly push the metal tab, and then install the new system battery in the socket.

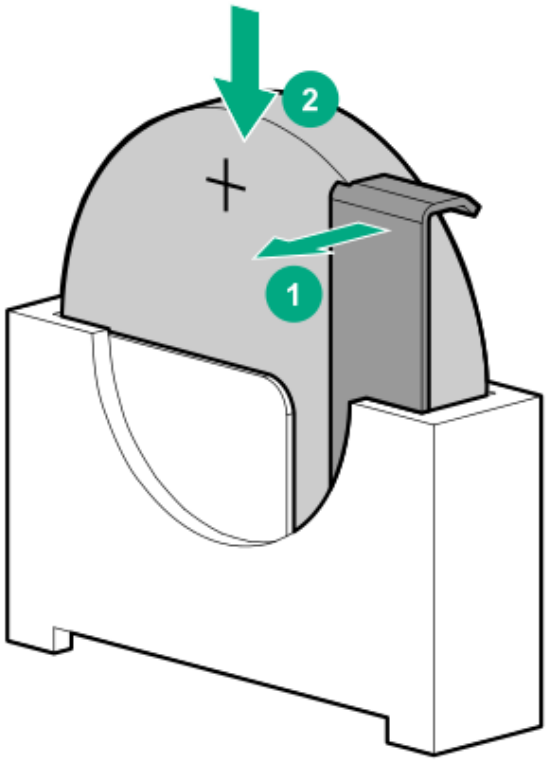

.0. Install the node cover.

.1. Install the server.

.2. Connect all peripheral cables to the server.

.3. If removed, connect the tube set.

.4. Power up the server.

Results

Properly dispose of the old battery. For more information about proper battery disposal, contact an authorized reseller or a service provider.

Specifications

Subtopics

Environmental specifications
Mechanical specifications

Environmental specifications

Specification	Value
Temperature range [1]	—
Operating	10°C to 35°C (50°F to 95°F)
Nonoperating	–30°C to 60°C (–22°F to 140°F)
Relative humidity (noncondensing)	—
Operating	8% to 90% 28°C (82.4°F), maximum wet bulb temperature
Nonoperating	5% to 95% 38.7°C (101.7°F), maximum wet bulb temperature

[1] All temperature ratings shown are for sea level. An altitude derating of 1.0°C per 305 m (1.8°F per 1000 ft) to 3050 m (10,000 ft) is applicable. No direct sunlight allowed. Maximum rate of change is 20°C per hour (36°F per hour). The upper limit and rate of change might be limited by the type and number of options installed.

For certain approved hardware configurations, the supported system inlet temperature range is extended. The extended range is 5°C to 10°C (41°F to 50°F) and 35°C to 40°C (95°F to 104°F) at sea level. An altitude derating of 1.0°C per every 175 m (1.8°F per every 574 ft) above 900 m (2953 ft) to a maximum of 3050 m (10,000 ft) is applicable.

Subtopics

Limited system operating temperature requirements

Limited system operating temperature requirements

The maximum system operating temperature for most components installed in the system is 35°C (95°F). However, some components in specific configurations are subject to temperature limitations. To ensure safe and reliable system operation, observe the limited operating temperature for these configurations. For more information, see the HPE website:

https://www.hpe.com/support/xl225ngen10plus-thermal

Mechanical specifications

Specification	Value
Dimensions	—
Height	41.30 mm (1.63 in)
Depth	616.63 mm (24.28 in)
Width	176.15 mm (6.94 in)
Weight, approximate values	—
Minimum	4.61 kg (10.16 lb)
Maximum	5.56 kg (12.26 lb)

Websites

General websites

Hewlett Packard Enterprise Information Library

https://www.hpe.com/info/EIL

Single Point of Connectivity Knowledge (SPOCK) Storage compatibility matrix

https://www.hpe.com/storage/spock

Storage white papers and analyst reports

https://www.hpe.com/storage/whitepapers

For additional websites, see Support and other resources.

Product websites

HPE ProLiant XL225n Gen10 Plus Server product page

https://www.hpe.com/servers/apollo2000

HPE ProLiant XL225n Gen10 Plus Server support page

https://www.hpe.com/support/apollo2000gen10plus

HPE ProLiant XL225n Gen10 Plus Server user documents

https://www.hpe.com/info/apollo2000gen10plus-docs

Support and other resources

Subtopics

Accessing Hewlett Packard Enterprise Support
Accessing updates
Remote support
Documentation feedback

Accessing Hewlett Packard Enterprise Support

- For live assistance, go to the Contact Hewlett Packard Enterprise Worldwide website:

  https://www.hpe.com/info/assistance

- To access documentation and support services, go to the Hewlett Packard Enterprise Support Center website:

  https://www.hpe.com/support/hpesc

Information to collect

- Technical support registration number (if applicable)
- Product name, model or version, and serial number
- Operating system name and version
- Firmware version
- Error messages
- Product-specific reports and logs
- Add-on products or components
- Third-party products or components

Accessing updates

- Some software products provide a mechanism for accessing software updates through the product interface. Review your product documentation to identify the recommended software update method.

- To download product updates:

  Hewlett Packard Enterprise Support Center

  https://www.hpe.com/support/hpesc

  My HPE Software Center

  https://www.hpe.com/software/hpesoftwarecenter

- To subscribe to eNewsletters and alerts:

  https://www.hpe.com/support/e-updates

- To view and update your entitlements, and to link your contracts and warranties with your profile, go to the Hewlett Packard Enterprise Support Center **More Information on Access to Support Materials** page:

  https://www.hpe.com/support/AccessToSupportMaterials

> **IMPORTANT:**
> Access to some updates might require product entitlement when accessed through the Hewlett Packard Enterprise Support Center. You must have an HPE Account set up with relevant entitlements.

Remote support

Remote support is available with supported devices as part of your warranty or contractual support agreement. It provides intelligent event diagnosis, and automatic, secure submission of hardware event notifications to Hewlett Packard Enterprise, which initiates a fast and accurate resolution based on the service level of your product. Hewlett Packard Enterprise strongly recommends that you register your device for remote support.

If your product includes additional remote support details, use search to locate that information.

HPE Get Connected

https://www.hpe.com/services/getconnected

HPE Tech Care Service

https://www.hpe.com/services/techcare

HPE Complete Care Service

https://www.hpe.com/services/completecare

Documentation feedback

Hewlett Packard Enterprise is committed to providing documentation that meets your needs. To help us improve the documentation, use the **Feedback** button and icons (at the bottom of an opened document) on the Hewlett Packard Enterprise Support Center portal (**https://www.hpe.com/support/hpesc**) to send any errors, suggestions, or comments. This process captures all document information.