HPE ProLiant XL645d Gen10 Plus Server User Guide

Part Number: 10-150101-Q326
Published: July 2026
Edition: 3

HPE ProLiant XL645d Gen10 Plus Server User Guide

Abstract

This document is for the person who installs, administers, and troubleshoots servers and storage systems. Hewlett Packard Enterprise assumes you are qualified in the servicing of computer equipment and trained in recognizing hazards in products with hazardous energy levels.

Part Number: 10-150101-Q326
Published: July 2026
Edition: 3

© Copyright 2026 Hewlett Packard Enterprise Development LP

Notices

The information contained herein is subject to change without notice. The only warranties for Hewlett Packard Enterprise products and services are set forth in the express warranty statements accompanying such products and services. Nothing herein should be construed as constituting an additional warranty. Hewlett Packard Enterprise shall not be liable for technical or editorial errors or omissions contained herein.

Confidential computer software. Valid license from Hewlett Packard Enterprise required for possession, use, or copying. Consistent with FAR 12.211 and 12.212, Commercial Computer Software, Computer Software Documentation, and Technical Data for Commercial Items are licensed to the U.S. Government under vendor's standard commercial license.

Links to third-party websites take you outside the Hewlett Packard Enterprise website. Hewlett Packard Enterprise has no control over and is not responsible for information outside the Hewlett Packard Enterprise website.

Acknowledgments

Ampere®, Altra®, and the A®, and Ampere® logos are registered trademarks or trademarks of Ampere Computing.

NVIDIA® is a registered trademark of NVIDIA Corporation in the U.S. and other countries.

AMD ™ is a trademark of Advanced Micro Devices, Inc.

SD®, and microSD® are trademarks or registered trademarks of SD-3C in the United States, other countries or both.

All third-party marks are property of their respective owners.

Revision history

Part Number	Published	Edition	Manual changes
10-150101-Q326	July 2026	3	Removed the Product QuickSpecs topic.
10-150101-Q324	May 2024	2	Added the following topics: • Remove the air baffle • Remove the GPU tray from the chassis
10-150101-Q221	Feb 2021	1	New Manual

Table of contents

Component identification 10
- Front panel components 10
- Front panel LEDs and buttons 11
  - UID button functionality 13
  - Front panel LED power fault codes 13
- Front panel pass-thru board components 14
- Rear panel components 15
- Rear panel LEDs and buttons 17
- System board module components 18
  - System board components 19
    - System maintenance switch descriptions 20
    - DIMM slot locations 21
    - DIMM label identification 22
    - Processor and socket components 23
  - Midplane interposer ports 24
- SXM4 GPU slots 26
- PCIe GPU tray components 27
- Riser board components 28
  - Primary riser board components 29
  - Secondary riser board components 29
- Power supply LED 31
- Fan module numbering 31
- Drives 32
  - Supported drives 32
  - HPE Smart Drive 33
- Drive bay numbering 34
- Storage controller components 36
- NVMe adapter components 36
- HPE NS204i-t Gen10 Plus NVMe Boot Controller components 36

Operations 37
- Power up the server 38
- Power down the server 38
- Extend the chassis from the rack 39
- Open the chassis front door 39

Close the chassis front door ... 40
Remove the midplane panel ... 41
Remove the enclosure midplane ... 42
Remove the GPU tray from the chassis ... 44
Remove the system board module from the chassis ... 45
Install the system board module into the chassis ... 46
Remove the system board module access panel ... 48
Install the system board module access panel ... 49
Remove the air baffle ... 50
Install the air baffle ... 51
Remove the midplane interposer ... 52
Install the midplane interposer ... 53
Remove a PCIe riser ... 53
Setup ... 56
HPE support services ... 56
Compiling the documentation ... 57
Initial system installation ... 57
HPE Installation Service ... 57
Setting up the server ... 58
General site planning ... 61
Operational requirements ... 61
Site requirements ... 62
Space and airflow requirements ... 62
Temperature requirements ... 63
Power requirements ... 64
Electrical grounding requirements ... 64
Server warnings and cautions ... 65
Safety and regulatory compliance ... 66
Determining power and cooling configurations ... 66
Power requirements ... 66
Hot-plug power supply calculations ... 67
Electrostatic discharge ... 67
Identifying the contents of the shipping carton ... 68
Installation overview ... 68
Installing the chassis into the rack ... 69
Installing the product in the rack ... 71
Installing hardware options ... 72
Operating system ... 72

Installing the operating system with Intelligent Provisioning 73
POST screen options 73
Registering the server 74
Hardware options installation 74
Hewlett Packard Enterprise product QuickSpecs 75
Hardware option installation guidelines 75
SUV cable option 76
SUV cable components 76
Using the SUV cable in a KVM setup 77
Using the SUV cable to access a USB drive in a KVM setup 78
Transceiver option 79
Transceiver warnings and cautions 80
Installing a transceiver 80
Installing a power supply 82
Installing a fan module 83
Drive options 84
Supported configurations 84
Installing a hot-plug drive 86
Installing a drive backplane 87
Memory options 90
DIMM population information 90
DIMM-processor compatibility 90
HPE SmartMemory speed information 90
Installing a DIMM 91
Riser and riser cage options 92
Supported PCIe form factors 93
Installing a PCIe riser 94
Storage controller options 97
Installing an expansion board or a type -p storage controller 97
GPU options 99
Installing a GPU tray 100
SXM4 GPU options 101
Installing an SXM4 GPU 101
PCIe GPU options 101
Installing a PCIe GPU 102
Installing a GPU bridge 105
Installing a processor and heatsink option 107
OCP NIC 3.0 adapter option 115

Installing the OCP NIC 3.0 adapter option ... 115
Enabling the OCP adapter as the iLO network interface adapter ... 118
Installing the HPE NS204i-t Gen10 Plus NVMe Boot Controller option ... 118
HPE Smart Storage Battery ... 121
Installing an HPE Smart Storage Battery ... 121
HPE Trusted Platform Module 2.0 Gen10 Plus option ... 125
Overview ... 125
HPE Trusted Platform Module 2.0 guidelines ... 126
Installing and enabling the HPE TPM 2.0 Gen10 Plus option ... 127
Installing the Trusted Platform Module board ... 127
Preparing the server for installation ... 127
Installing the TPM board and cover ... 129
Preparing the server for operation ... 131
Enabling the Trusted Platform Module ... 132
Enabling the Trusted Platform Module as TPM 2.0 ... 132
Enabling the Trusted Platform Module as TPM 1.2 ... 133
Retaining the BitLocker recovery key/password ... 134
Cabling ... 134
Cabling guidelines ... 134
Front I/O cabling ... 136
Display port cabling ... 137
Fan cabling ... 138
Drive-controller-backplane configuration cabling ... 139
Gen10 Plus 8 SFF SAS/SATA Standard backplane cabling ... 140
8 embedded SATA configuration cabling for chassis 1 ... 140
8 embedded SATA configuration cabling for chassis 2 ... 141
8 SAS/SATA (Smart Array) configuration cabling for chassis 1 ... 141
8 SAS/SATA (Smart Array) configuration cabling for chassis 2 ... 142
8 + 8 embedded SATA configuration cabling ... 143
8 + 8 SAS/SATA with E208i-p/P408i-p controller configuration cabling ... 144
SAS/SATA-NVMe configuration cabling ... 145
2 embedded SATA + 2 NVMe drive configuration cabling for chassis 1 ... 146
2 embedded SATA + 2 NVMe drive configuration cabling for chassis 2 ... 147
2 embedded SATA + 6 NVMe configuration cabling for chassis 1 ... 148
2 embedded SATA + 6 NVMe configuration cabling for chassis 2 ... 150
2 SAS/SATA + 4 NVMe configuration cabling for chassis 2 ... 152
2 SAS/SATA + 2 NVMe wtih E208i-p/P408i-p configuration cabling for chassis 1 154
2 SAS/SATA + 2 NVMe wtih E208i-p/P408i-p configuration cabling for chassis 2 155

8 NVMe configuration cabling for chassis 2 ... 157
HPE NS204i-t Gen10 Plus NVMe Boot Controller -M.2 SSD module cabling ... 159
2 NVMe + M.2 configuration cabling for chassis 1 ... 159
2 NVMe + M.2 configuration cabling for chassis 2 ... 161
6 NVMe + M.2 configuration cabling for chassis 2 ... 162
HPE Smart Storage Battery cabling ... 164
Power switch cabling ... 164
Drive backplane power cabling ... 165
Gen10 Plus 8 SFF SAS/SATA Standard backplane power cabling ... 165
U.3 Premium 8 SFF NVMe backplane power cabling ... 166
GPU power cabling ... 167
4 double-width PCIe GPU to PCIe GPU board power cabling ... 167
4 double-width PCIe GPU to PCIe GPU board power cabling ... 168
Software and configuration utilities ... 169
Server mode ... 170
iLO ... 170
iLO Federation ... 171
iLO RESTful API ... 171
RESTful Interface Tool ... 172
iLO Amplifier Pack ... 172
Integrated Management Log ... 172
Intelligent Provisioning ... 173
Intelligent Provisioning operation ... 174
Management security ... 175
Scripting Toolkit for Windows and Linux ... 175
UEFI System Utilities ... 175
Secure Boot ... 176
Launching the Embedded UEFI Shell ... 177
HPE Smart Storage Administrator ... 178
HPE InfoSight for servers ... 178
USB support ... 179
External USB functionality ... 179
Redundant ROM support ... 179
Safety and security benefits ... 180
Keeping the system current ... 180
Updating firmware or system ROM ... 180
Service Pack for ProLiant ... 181
Introduction to Smart Update Manager ... 181

Updating firmware from the System Utilities 182
Integrated Smart Update Tools 183
Updating the firmware from the UEFI Embedded Shell 183
Online Flash components 184
Drivers 184
Software and firmware 185
Operating system version support 185
HPE Pointnext Portfolio 185
Proactive notifications 186
Troubleshooting 186
Troubleshooting resources 186
System battery replacement 187
System battery information 187
Removing and replacing the system battery 187
Specifications 189
Server mechanical specifications 190
Power supply specifications 190
HPE 3000 W 200–277 VAC Platinum Hot-plug Power Supply 190
HPE 54 V Out 3000 W 200–277 VAC Hot-plug Power Supply 191
Websites 192
Support and other resources 192
Accessing Hewlett Packard Enterprise Support 192
HPE product registration 193
Accessing updates 193
Remote support 194
Warranty information 194
Regulatory information 195
Documentation feedback 195

Component identification

This chapter describes the external and internal server features and components.

Subtopics

Front panel components
Front panel LEDs and buttons
Front panel pass-thru board components
Rear panel components
Rear panel LEDs and buttons
System board module components
SXM4 GPU slots
PCIe GPU tray components
Riser board components
Power supply LED
Fan module numbering
Drives
Drive bay numbering
Storage controller components
NVMe adapter components
HPE NS204i-t Gen10 Plus NVMe Boot Controller components

Front panel components

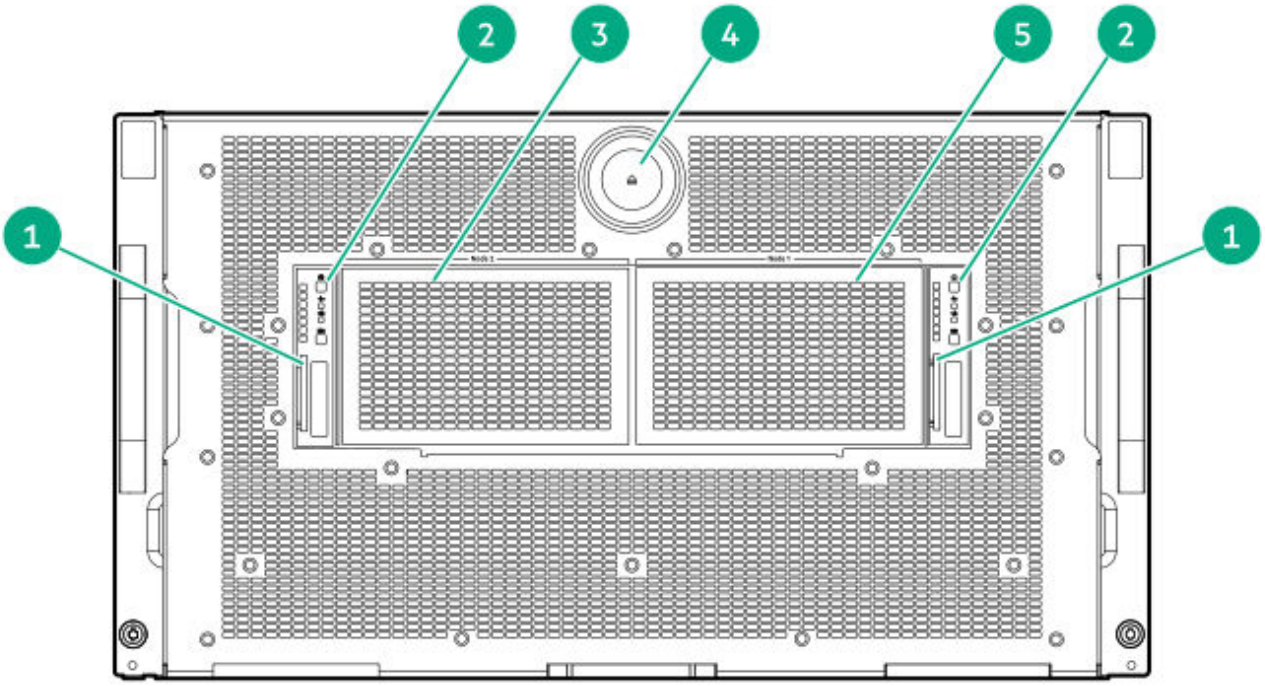

Item	Description
1	Serial number/iLO information pull tab
2	Power switch module
3	Drive box 1 (labeled Node 2)
4	chassis front door lever button
5	Drive box 2 (labeled Node 1)

Front panel LEDs and buttons

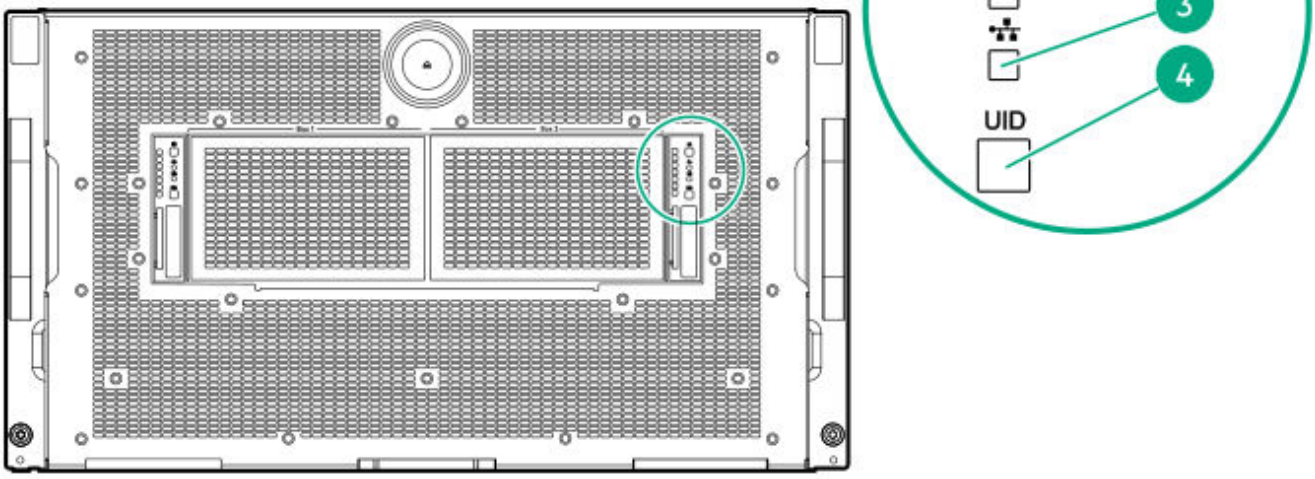

Item	Description	Status
1	Power on/Standby button and system power LED [1]	Solid green = System on Flashing green = Performing power on sequence Solid amber = System in standby, or power on denied Off = No power present [2]
2	Health LED [1], [3]	Solid green = Normal Flashing amber= System degraded Flashing red = System critical [4]
3	NIC status LED [1]	Solid green = Link to network Flashing green = Network active Flashing red = System critical
4	UID button LED [1]	Solid blue = Activated Flashing blue = Remote management or firmware upgrade in progress Off = Deactivated

[1] When all four LEDs described in this table flash simultaneously, a power fault has occurred.

2 Facility power is not present, power cord is not attached, no power supplies are installed, power supply failure has occurred, or the power button cable is disconnected.
3 NIC LEDs are not supported for NICs installed in PCIe slots.
4 If the health LED indicates a degraded or critical state, review the system IML or use iLO to review the system health status.

When all four LEDs described in this table flash simultaneously, a power fault has occurred. For more information, see Front panel LED power fault codes.

Subtopics

UID button functionality
Front panel LED power fault codes

UID button functionality

The UID button can be used to identify a specific server in a rack or display the Server Health Summary when the server will not power on. For more information, see the latest HPE iLO User Guide on the **Hewlett Packard Enterprise website**.

Front panel LED power fault codes

The following table provides a list of power fault codes, and the subsystems that are affected. Not all power faults are used by all servers.

Subsystem	LED behavior
System board	1 flash
Processor	2 flashes
Memory	3 flashes
Riser board PCIe slots	4 flashes
FlexibleLOM	5 flashes
Storage controller	6 flashes
System board PCIe slots	7 flashes
Power backplane	8 flashes
Storage backplane	9 flashes
Power supply	10 flashes
PCIe expansion cards installed in riser board	11 flashes

Subsystem	LED behavior
Chassis	12 flashes
GPU card	13 flashes

Front panel pass-thru board components

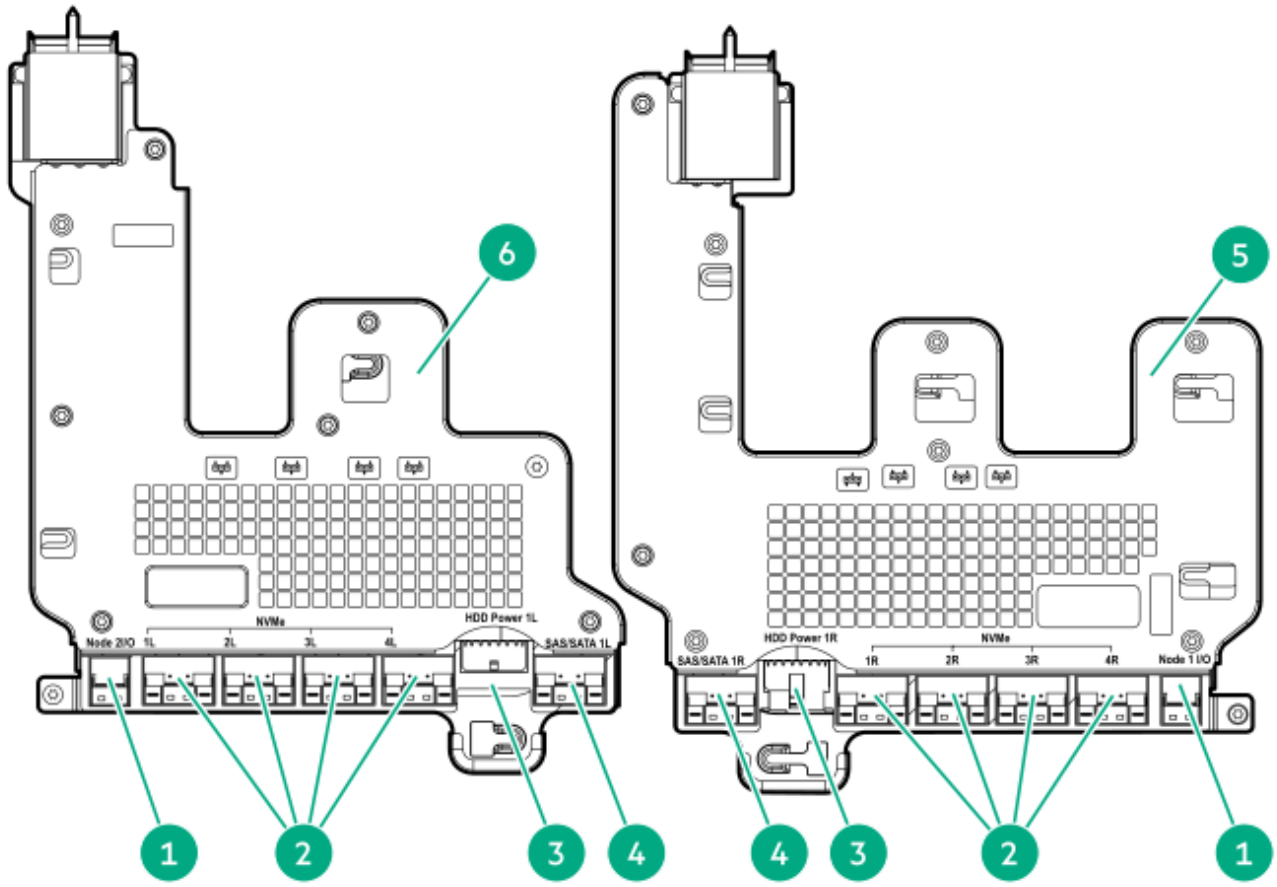

Item	Description
1	Front I/O cable connector
2	Drive cable connectors 1 to 4
3	Drive backplane power cable connector
4	Drive SAS/SATA cable connector

Item	Description
5	Front panel pass-thru board 1 (Node 1 drive I/O)
6	Front panel pass-thru board 2 (Node 2 drive I/O)

Rear panel components

SXM GPU configuration

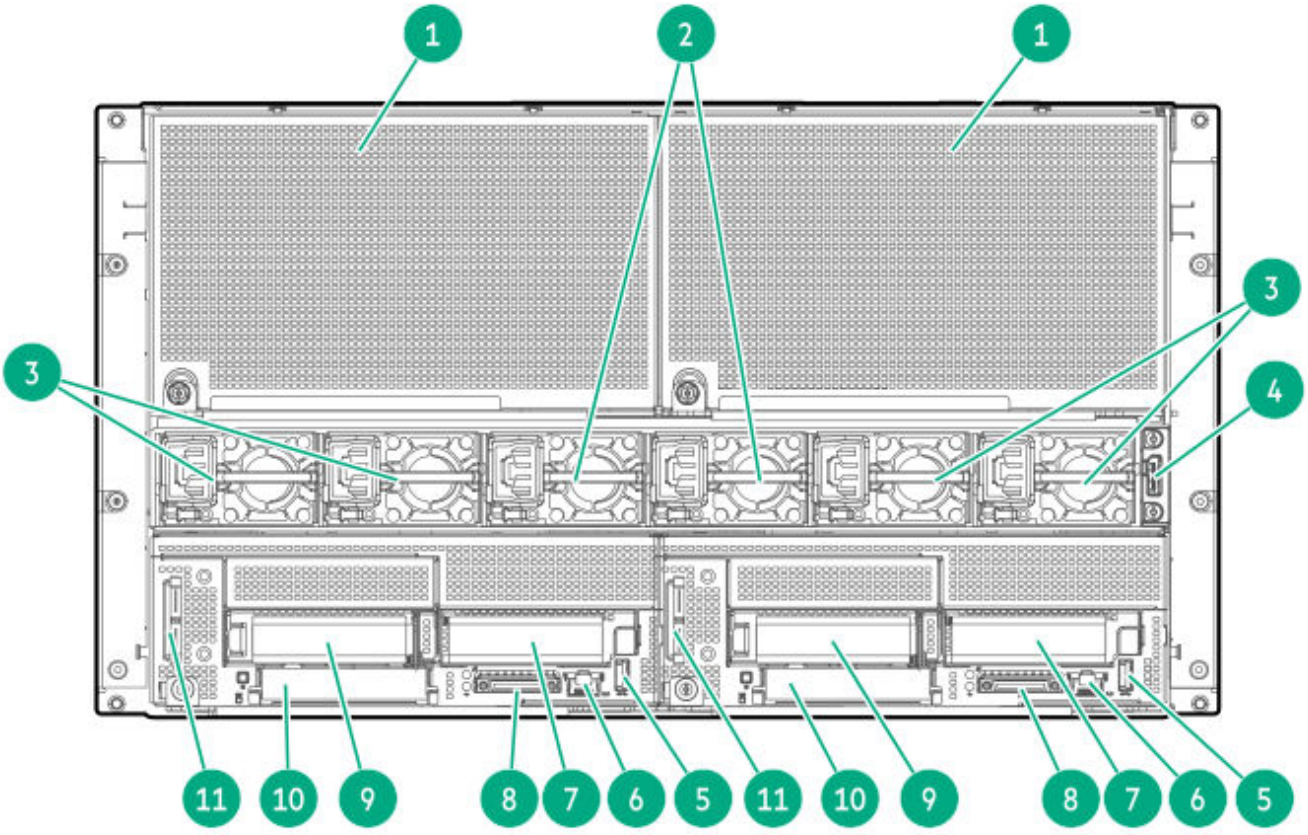

Item	Description
1	SXM GPU trays
2	12 V power supplies (2)
3	54V power supplies (4)
4	APM 2.0 connector

Item	Description
5	USB 3.1 Gen 1 Type-A port
6	NIC/shared iLO network port
7	Slot 10 PCIe4 x16 (16, 8, 4, 2, 1)
8	SUV port
9	Slot 9 PCIe4 x16 (16, 8, 4, 2, 1)
10	OCP 3.0 NIC adapter slot blank
11	Serial number/iLO information pull tab

PCIe GPU configuration

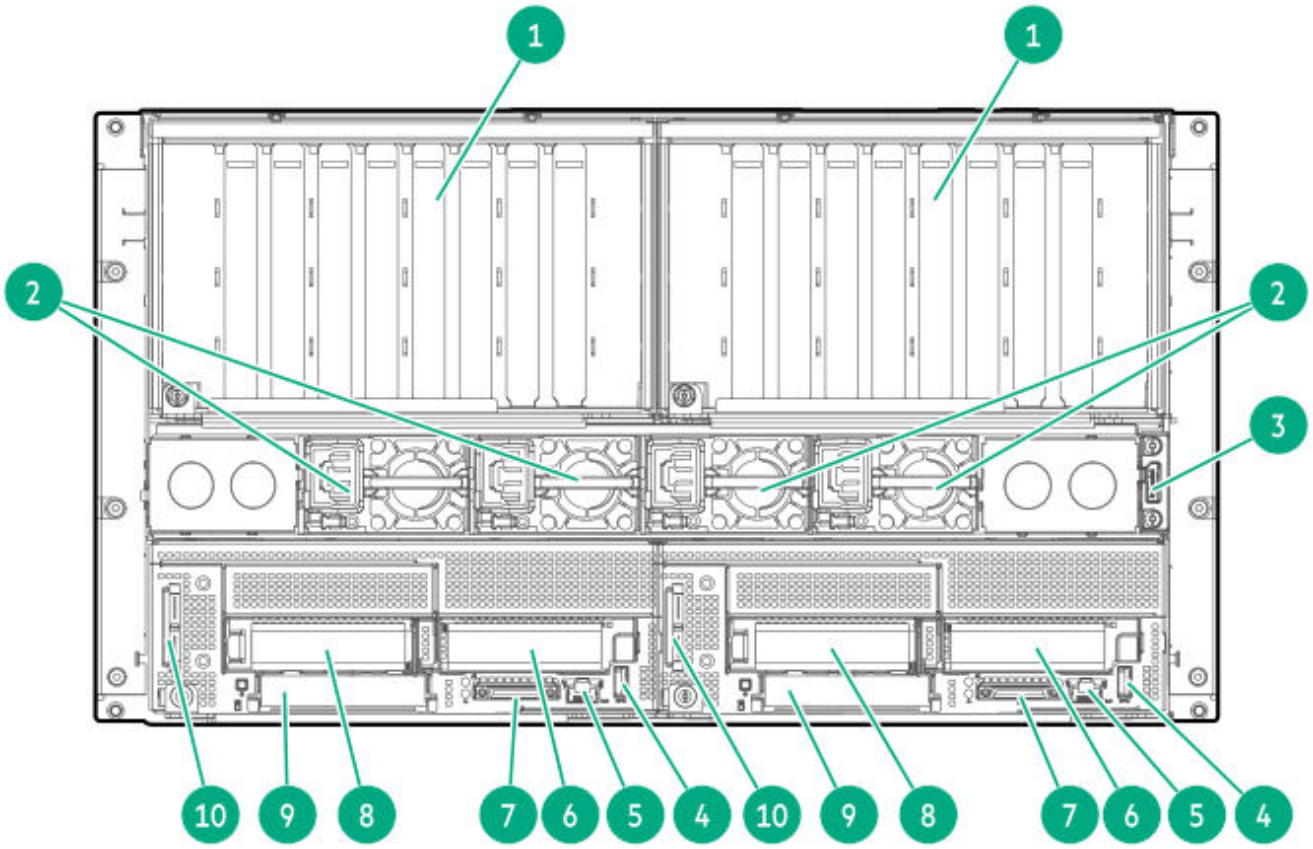

Item	Description
1	PCIe GPU trays
2	12 V power supplies (4)
3	APM 2.0 connector
4	USB 3.1 Gen 1 Type-A port

Item	Description
5	NIC/shared iLO network port
6	Slot 10 PCIe4 x16 (16, 8, 4, 2, 1)
7	SUV port
8	Slot 9 PCIe4 x16 (16, 8, 4, 2, 1)
9	OCP 3.0 NIC adapter slot blank
10	Serial number/iLO information pull tab

Rear panel LEDs and buttons

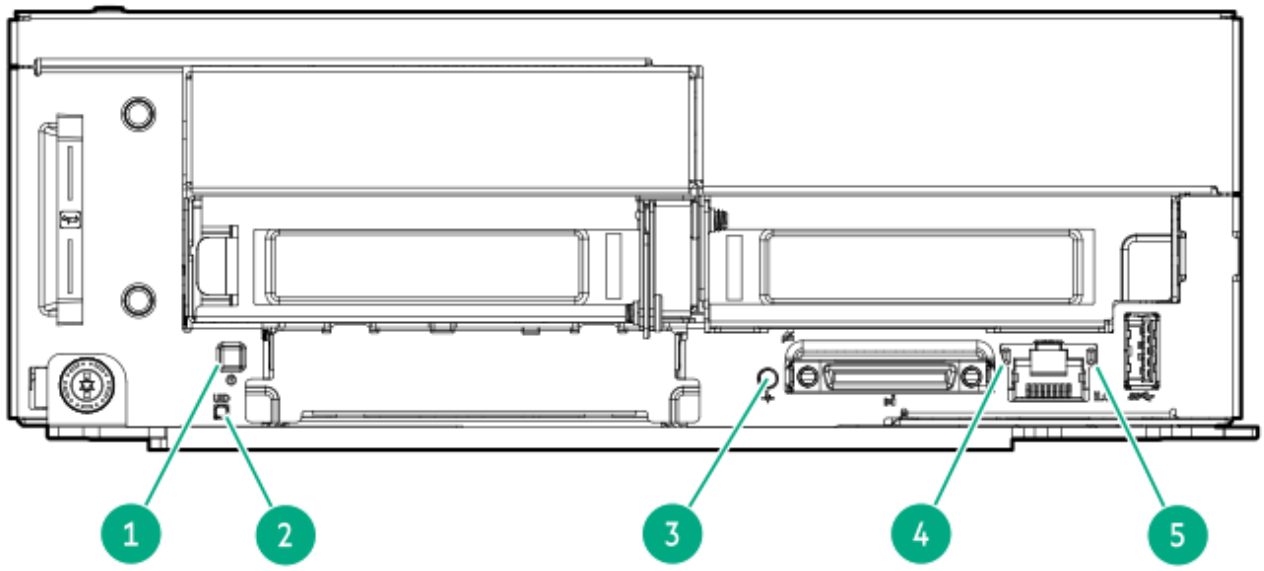

Item	Description	Definition
1	Power On/Standby button and LED [1]	Solid green = System on Flashing green = Performing power-on sequence Solid amber = System in standby Off = No power present [2]
2	UID LED [1]	Solid blue = Activated Flashing blue:

Item	Description	Definition
		• 1 flash per second = Remote management or firmwar e upgrade in progress • 4 flashes per second = iLO manual reboot sequence in itiated • 8 flashes per second = iLO manual reboot sequence in progress Off = Deactivated
3	Health LED [1]	Solid green = Normal Flashing green = iLO is rebooting Flashing amber = System degraded Flashing red = System critical [3]
4	NIC link LED	Solid green = Network link Off = No network link
5	NIC status LED	Flashing green = Network active Off = No network activity

1 When these LEDs flash simultaneously, a power fault has occurred. For more information, see Front panel LED power fault codes.
2 Facility power is not present, power cord is not attached, no power supplies are installed, power supply failure has occurred, or the node power button cable is disconnected.
3 If the Health LED indicates a degraded or critical state, review the system IML or use iLO to review the system health status.

System board module components

The system board module consists of a system board and a midplane interposer.

Subtopics

System board components
Midplane interposer ports

System board components

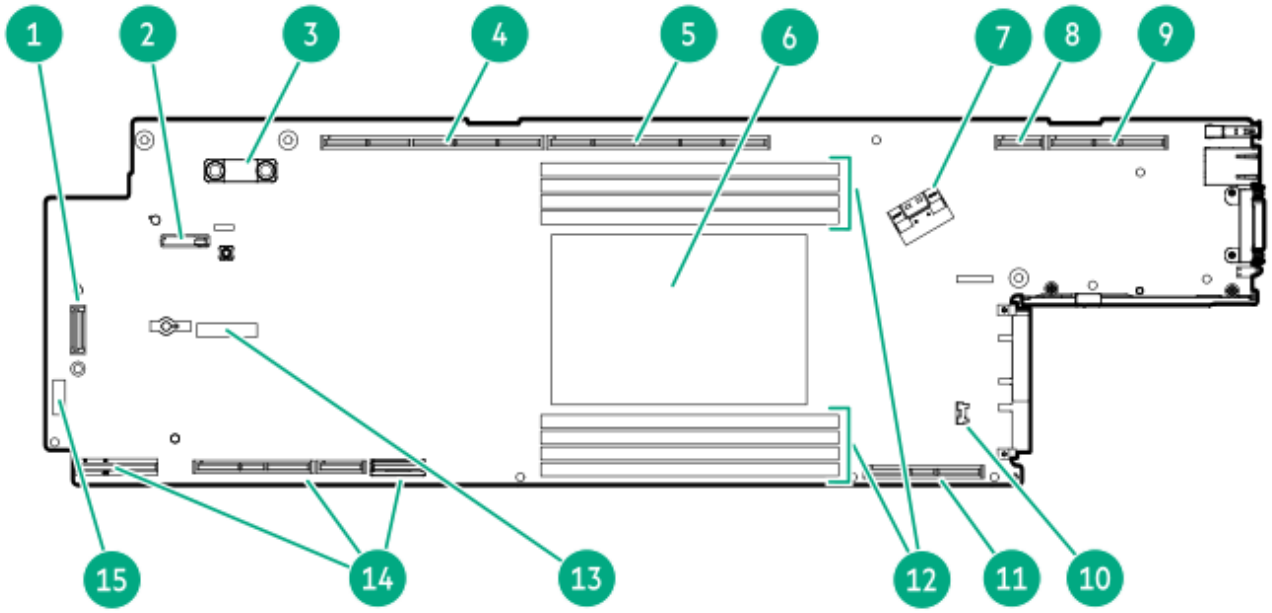

Item	Description
1	HPE NS204i-t Gen10 Plus NVMe Boot Controller connector
2	System battery
3	TPM connector
4	Secondary PCIe4 x16 riser connector 5
5	Secondary PCIe4 x16 riser connector 4
6	Processor
7	x8 Slim SAS NVMe/SATA 6GB/s port
8	Secondary PCIe4 x16 riser connector 3
9	Secondary PCIe4 x16 riser connector 2
10	System board module power button cable connector
11	Primary PCIe4 x16 riser connector 1
12	DIMM slots

Item	Description
13	Slim SAS connector for M.2 SSD boot controller option
14	Tertiary PCIe4 x16 riser connector 6
15	System maintenance switch

Subtopics

System maintenance switch descriptions
DIMM slot locations
DIMM label identification
Processor and socket components

System maintenance switch descriptions

Position	Default	Function
S1 [1]	Off	• Off— iLO 5 security is enabled. • On— iLO 5 security is disabled.
S2	Off	Reserved
S3	Off	Reserved
S4	Off	Reserved
S5 [1]	Off	• Off—Power-on password is enabled. • On—Power-on password is disabled.
S6 [1, 2, 3]	Off	• Off—No function • On—Restore default manufacturing settings
S7	Off	Reserved
S8	Off	Reserved
S9	Off	Reserved
S10	Off	Reserved
S11	Off	Reserved

Position	Default	Function
S12	Off	Reserved

1 To access the redundant ROM, set S1, S5, and S6 to On.
2 When the system maintenance switch position 6 is set to the On position, the system is prepared to restore all configuration settings to their manufacturing defaults.
3 When the system maintenance switch position 6 is set to the On position and Secure Boot is enabled, some configurations cannot be restored. For more information, see Configuring the server.

DIMM slot locations

DIMM slots are numbered sequentially (1 through 8) for each processor. The supported AMP modes use the letter assignments for population guidelines.

The arrow indicates the front of the server.

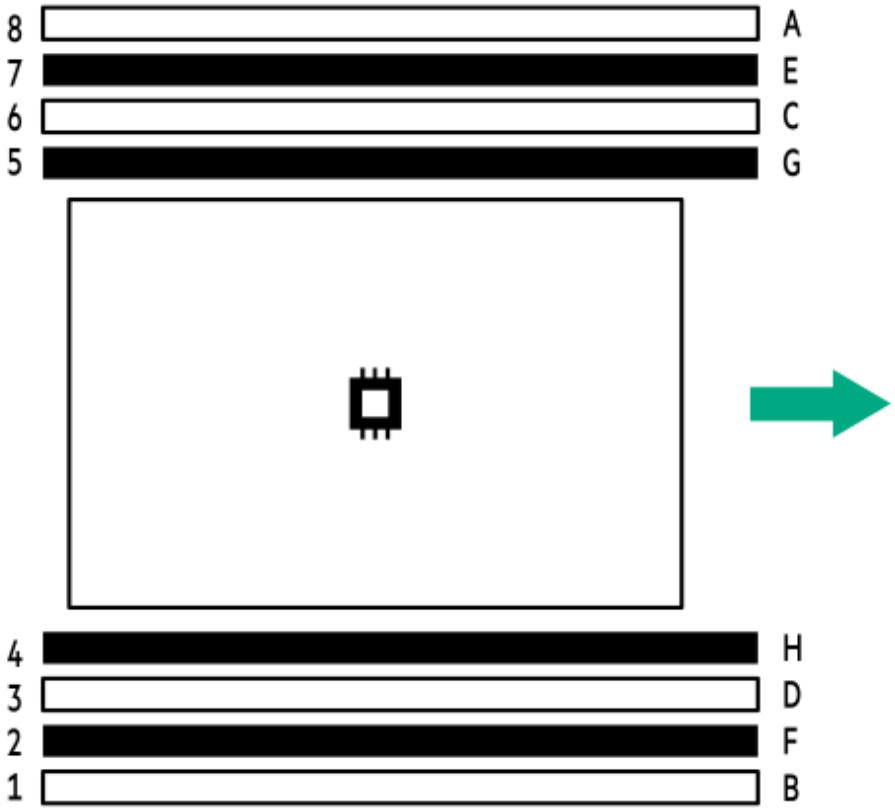

DIMM label identification

To determine DIMM characteristics, see the label attached to the DIMM. The information in this section helps you to use the label to locate specific information about the DIMM.

For more information about product features, specifications, options, configurations, and compatibility, see the HPE DDR4 SmartMemory QuickSpecs:

https://www.hpe.com/support/DDR4SmartMemoryQS

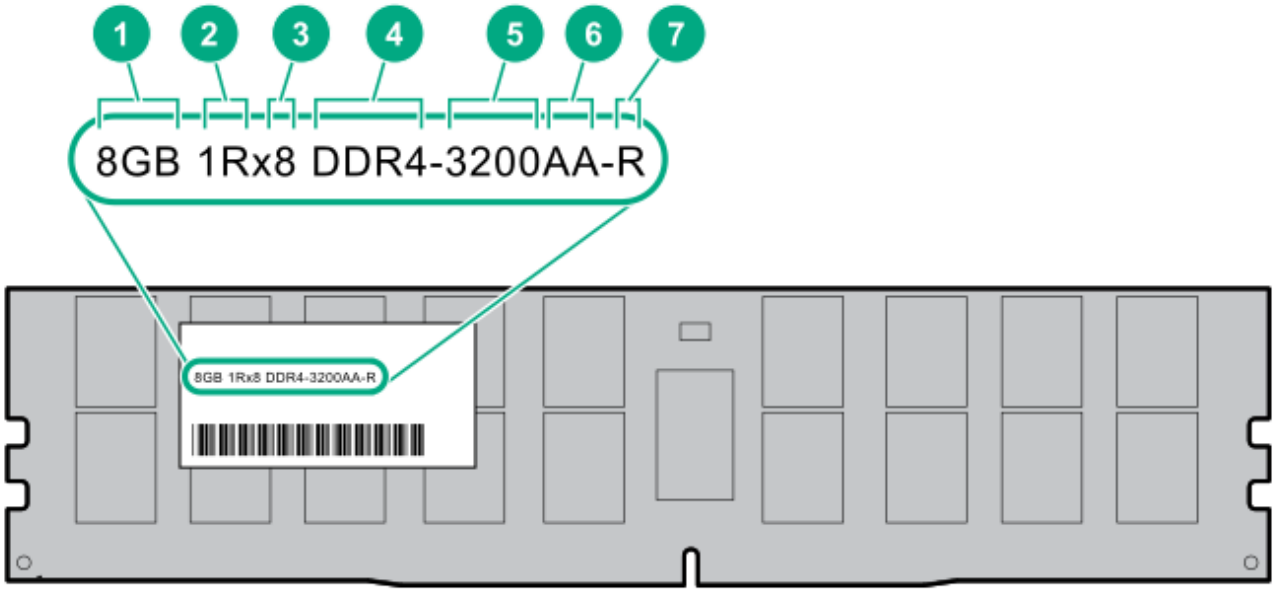

Item	Description	Example
1	Capacity [1]	8 GB 16 GB 32 GB 64 GB 128 GB 256 GB
2	Rank	1R = Single rank 2R = Dual rank 4R = Quad rank 8R = Octal rank

Item	Description	Example
3	Data width on DRAM	x4 = 4-bit x8 = 8-bit
4	Memory generation	PC4 = DDR4
5	Maximum memory speed [1]	3200 MT/s
6	CAS latency	AA = CAS 22-22-22 AA = CAS 26-22-22 (for 3DS LRDIMM)
7	DIMM type	E = Unbuffered ECC (UDIMM) R = RDIMM (registered) L = LRDIMM (load reduced)

[1] The maximum memory speed and capacity is a function of the memory type, memory configuration, and processor model.

Processor and socket components

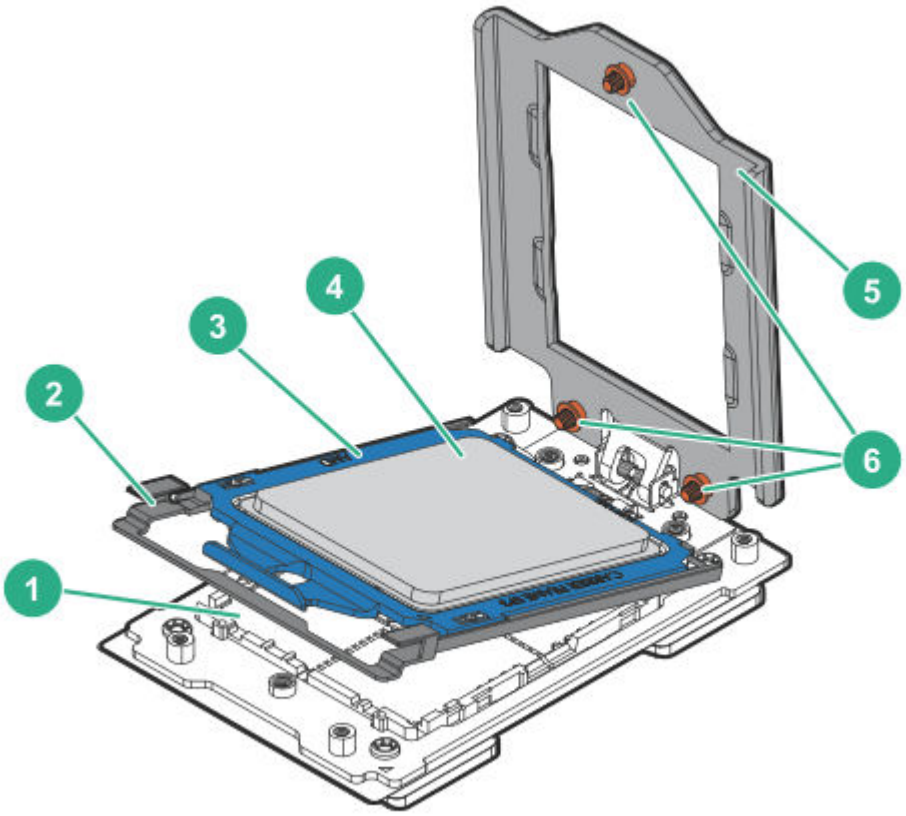

Item	Description
1	Pin field
2	Rail frame
3	Carrier frame
4	Processor
5	Force frame
6	Captive screws (Torx T-20)

Midplane interposer ports

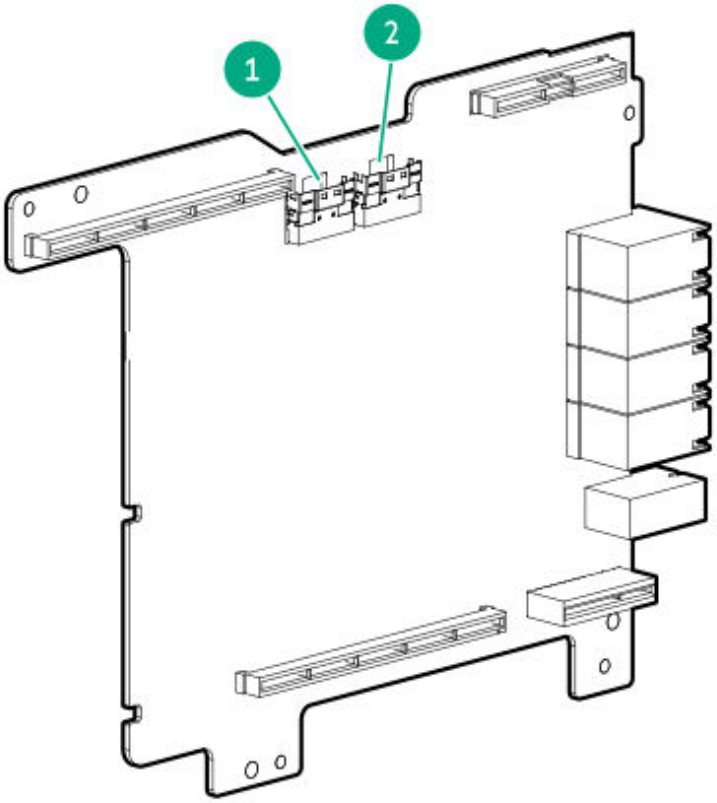

Item	Description
1	Port 1
2	Port 2

SXM4 GPU slots

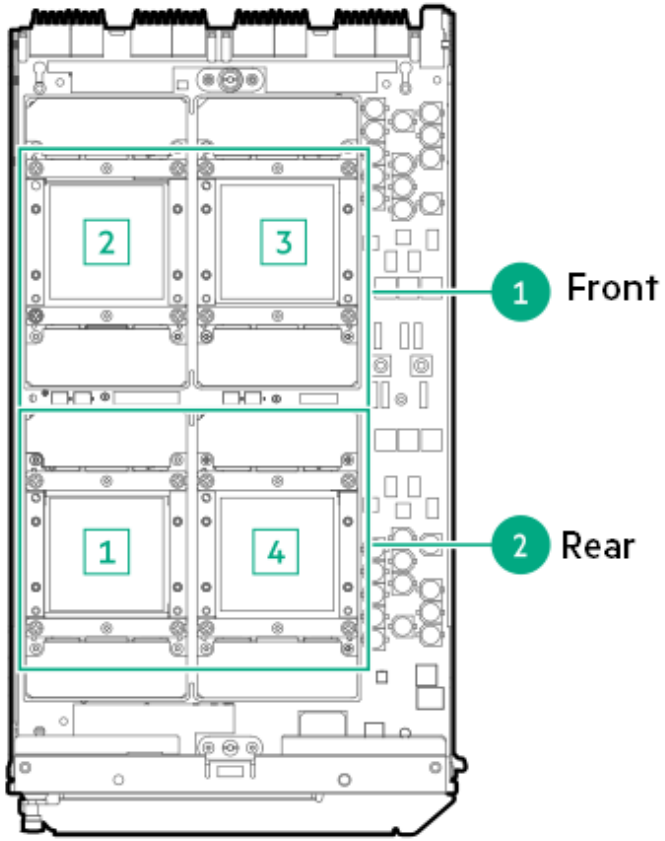

Item	Description
1	SXM GPU slots 2 and 3
2	SXM GPU slots 1 and 4

Table 1. XL645d Gen10 Plus Treasure Map - four A100 GPUs populated

PCIe Bus	NVIDIA Driver device	iLO Device	Server physical slot	Location
0x07	GPU0	iLO GPU 3	Slot 3	Front
0x46	GPU1	iLO GPU 4	Slot 4	Rear
0x85	GPU2	iLO GPU 2	Slot 2	Front
0xC7	GPU3	iLO GPU 1	Slot 1	Rear

PCIe GPU tray components

Double-wide PCIe GPUs can be installed in slots 1, 3, 5, and 7; and single-wide GPUs can be installed in slots 1-8. You can install either 4 double-wide PCIe GPUs or 8 single-wide PCIe GPUs in a PCIe GPU tray.

8 single-width GPU configuration

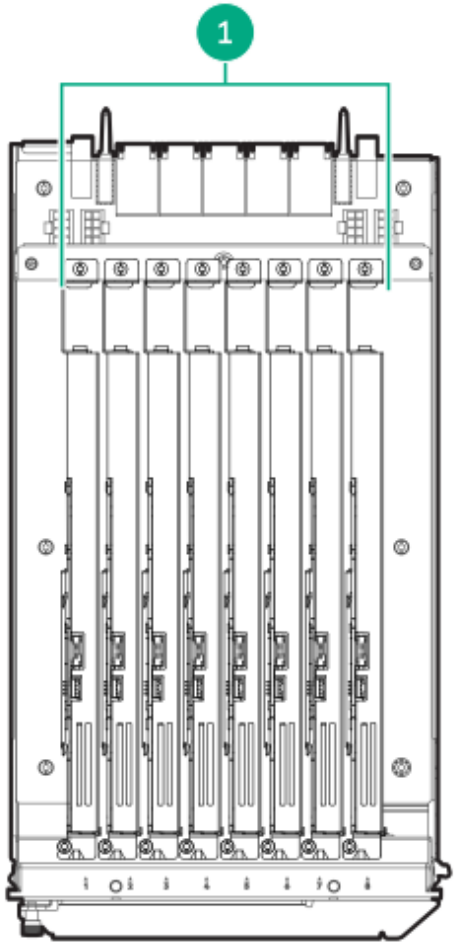

Item	Description
1	PCIe single-width GPU slots 1-8

4 double-width GPU configuration

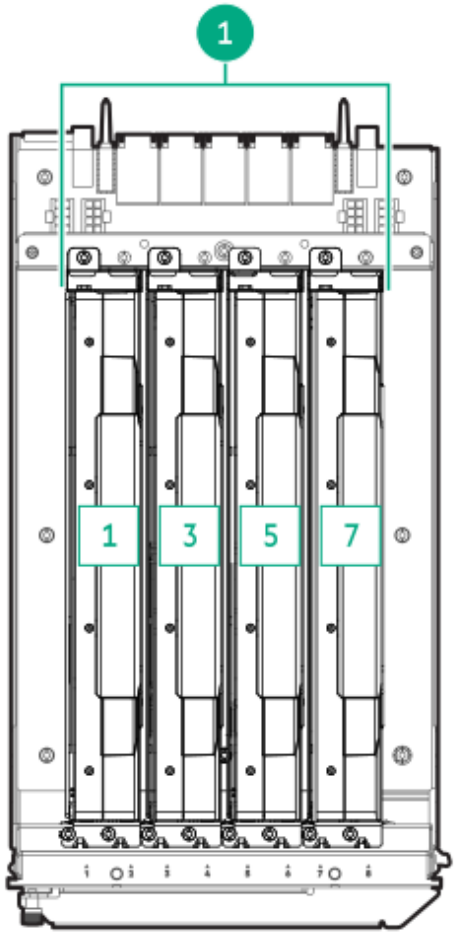

Item	Description
1	PCIe double-width GPU slots 1, 3, 5, and 7

Riser board components

A system board module supports primary, secondary, and tertiary riser board options. The primary and secondary riser options support the installation of half-height, half-length (low profile) PCIe cards. The tertiary riser board contains the HPE Smart Storage Battery connector.

Subtopics

Primary riser board components
Secondary riser board components

Primary riser board components

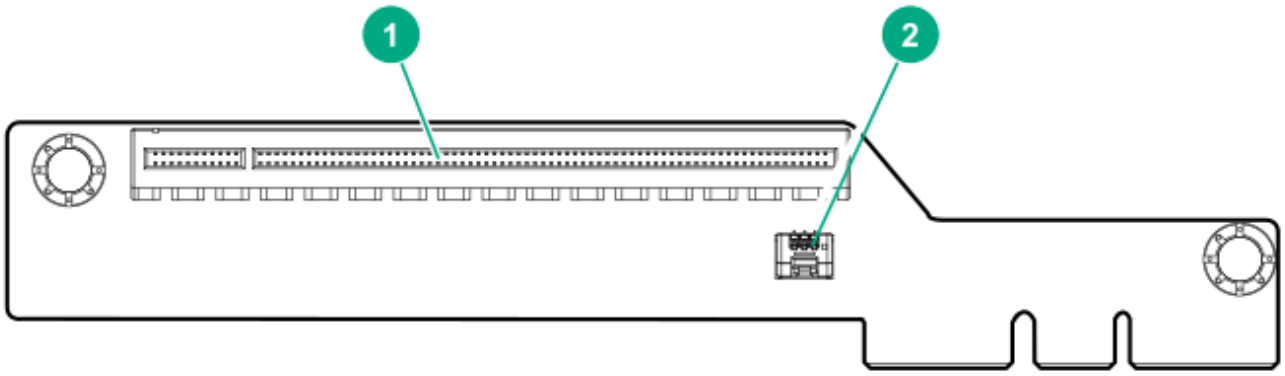

Item	Description
1	Primary PCIe4 x16 riser connector 1
2	Storage controller backup power connector

Secondary riser board components

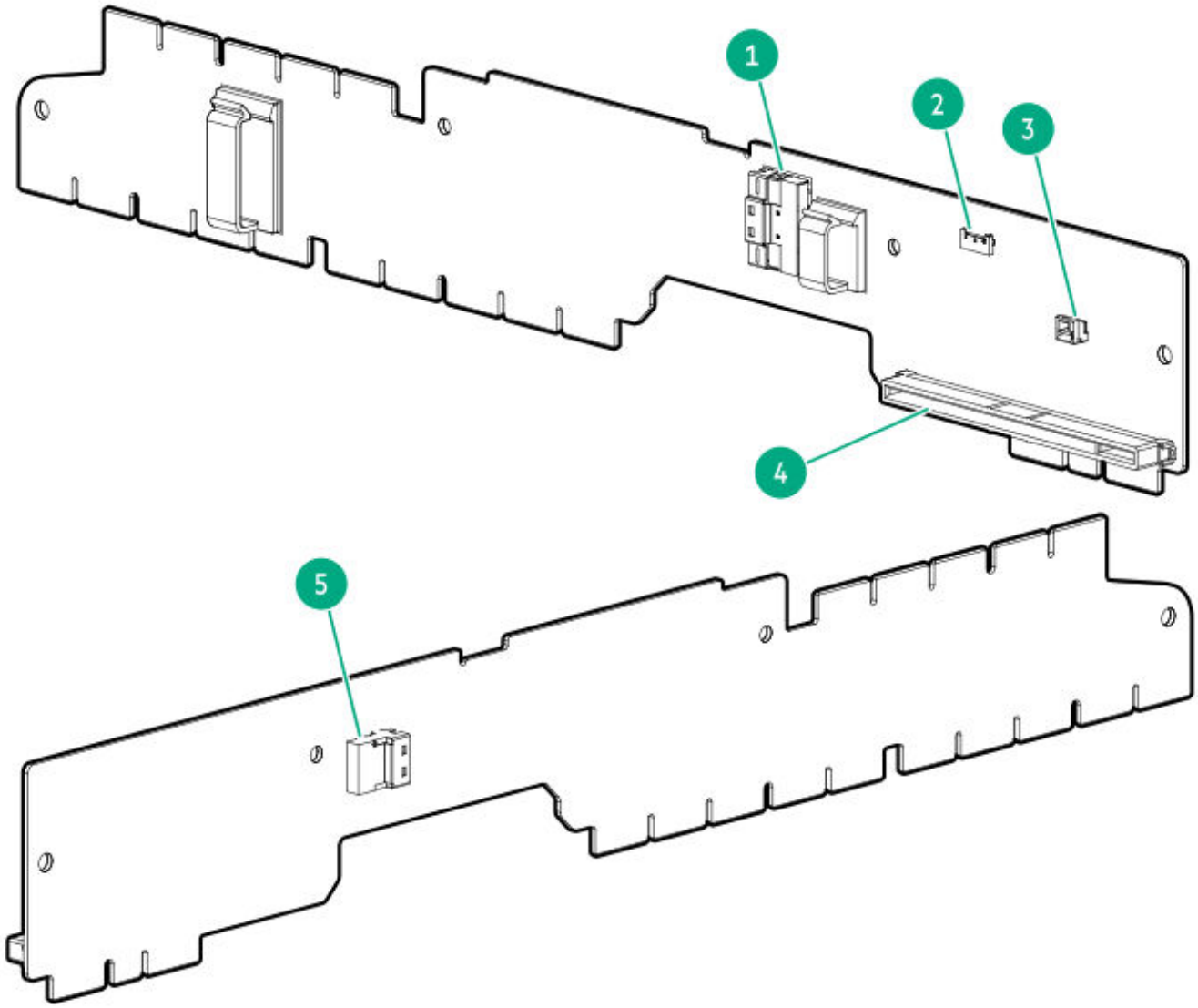

Item	Description
1	x8 Slim SAS NVMe/SATA 6GB/s port
2	Pump-cold plate signal connector for processor
3	Storage controller backup power connector
4	Slot 10 PCIe4 ×16 (16, 8, 4, 2, 1)
5	Slim SAS x4 port for front panel LEDs

Power supply LED

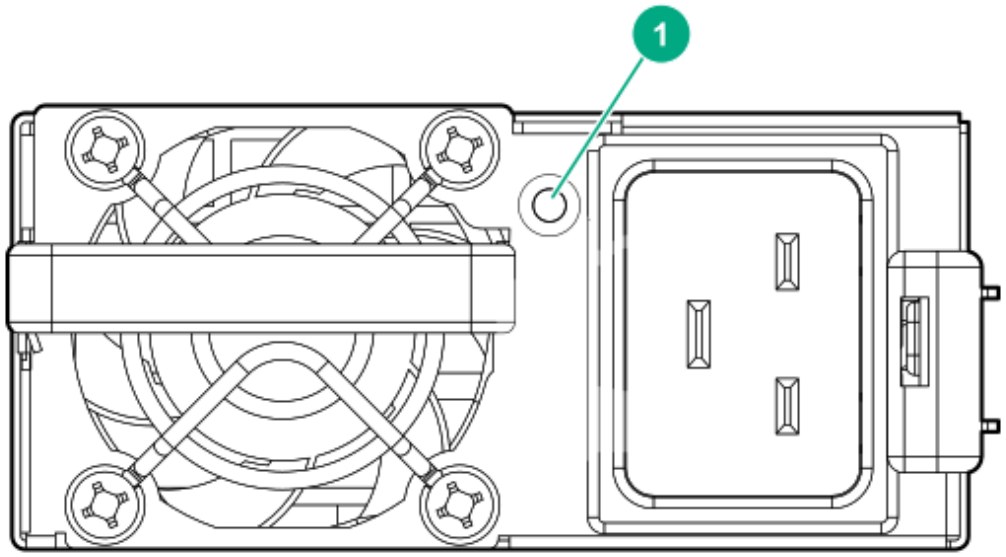

Status	Description
Solid green	Power supply is on and is operating normally.
Flashing green (0.5 Hz)	12 V standby power present (Power supply off)
Flashing green (2 Hz)	Power supply is in Smart redundant state or offline mode.
Solid amber	12 V fault caused a shutdown; power supply failed (overvoltage/undervoltage, overtemperature, overcurrent, short-circuit), fan failed, or input overvoltage protection
Off	No power present or standby power failed (overvoltage/undervoltage, overtemperature, overcurrent, short-circuit, fan lock)

Fan module numbering

The system supports 15 fan modules. If the system has one fan lesser than the recommended (15) number during boot, the system will boot in the Nonredundant Mode. If the missing fan is installed, the system will begin functioning in Redundant Mode. If more than one fan is missing during power up, the user will be allowed to boot, but will be using an unsupported configuration.

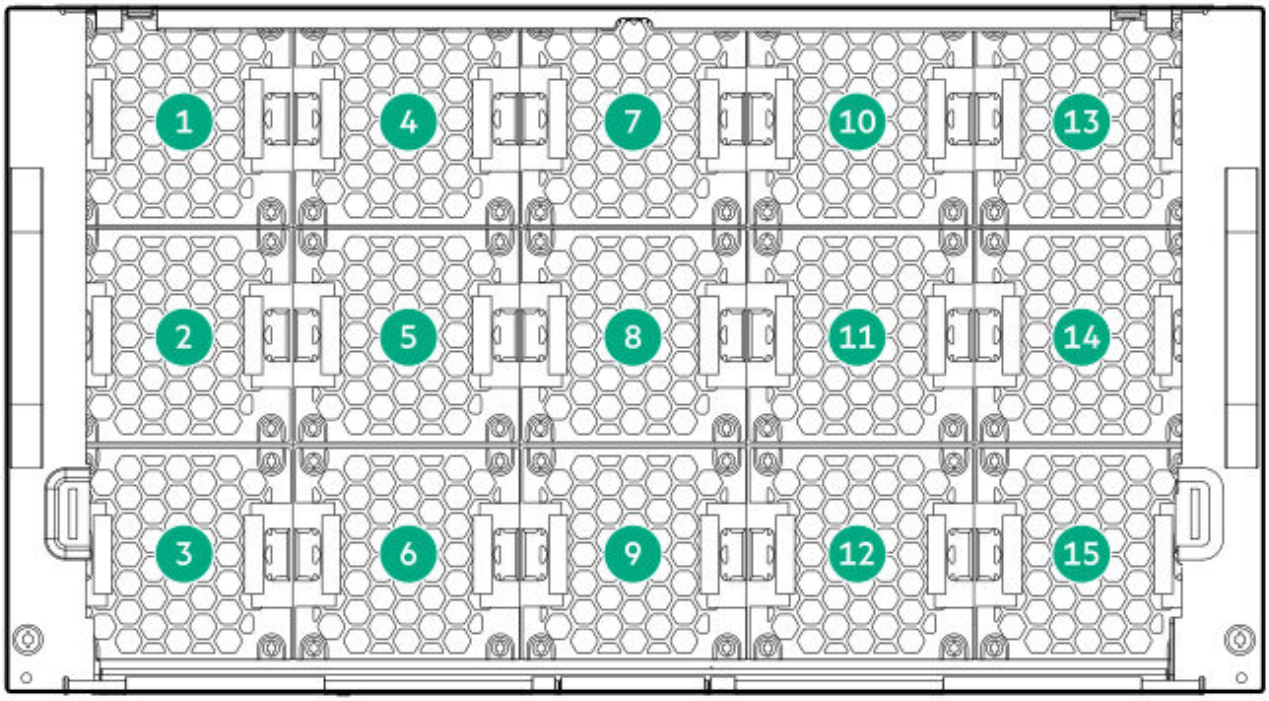

Drives

Subtopics

Supported drives
HPE Smart Drive

Supported drives

- 8 SFF Gen10 SAS/SATA drive backplane supports 6Gbps SATA/12Gbps SAS drives
- 8 SFF U.3 Premium drive backplane supports x2NVMe drives and x4NVMe drives

HPE Smart Drive

This HPE Smart Drive carrier supports SAS, SATA, and NVMe drives.

Drive LEDs

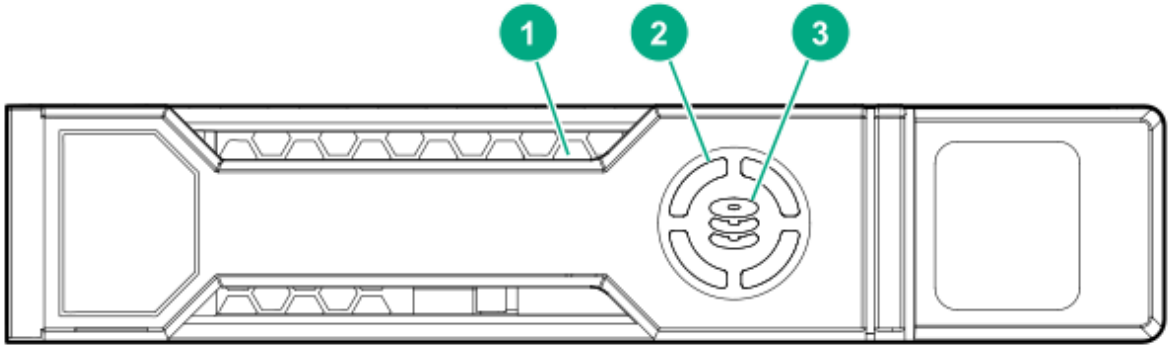

Item	Description	Status
1	Locate	• Solid blue = The drive is being identified by a host application. • Flashing blue = The drive carrier firmware is being updated or requires an update.
2	Activity ring	• Rotating green = Drive activity. • Off = No drive activity.
3	Drive status	• Solid green = The drive is a member of one or more logical drives. • Flashing green = The drive is doing one of the following: ◦ Rebuilding or performing a RAID migration ◦ Performing a strip size migration ◦ Performing a capacity expansion ◦ Performing a logical drive extension ◦ Erasing • Flashing amber/green = The drive is a member of one or more logical drives and predicts the drive will fail.

Item	Description	Status
		• Flashing amber = The drive is not configured and predicts the drive will fail. • Solid amber = The drive has failed, is unsupported, or is i nvalid. • Off = The drive is not configured by a RAID controller or a spare drive.

Components

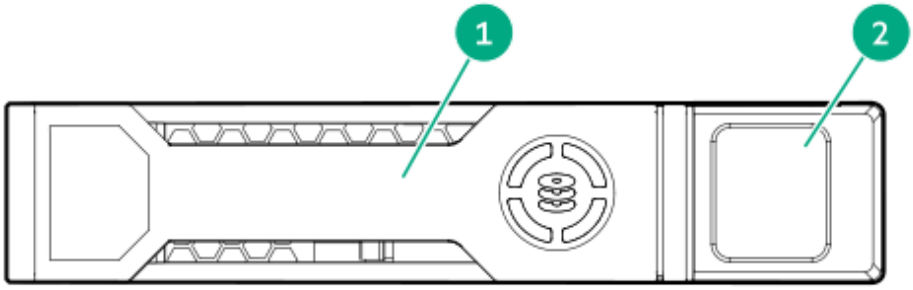

Item	Description	Definition
1	Drive handle	• Pull the open handle to remove a drive. • Close the handle to fully seat and lock a drive into place.
2	Handle release button	Releases the drive handle for removal and insertion.

Drive bay numbering

8 + 8 embedded SATA or 8 + 8 SAS/SATA or 2 SAS/SATA + 6 NVMe drive configuration

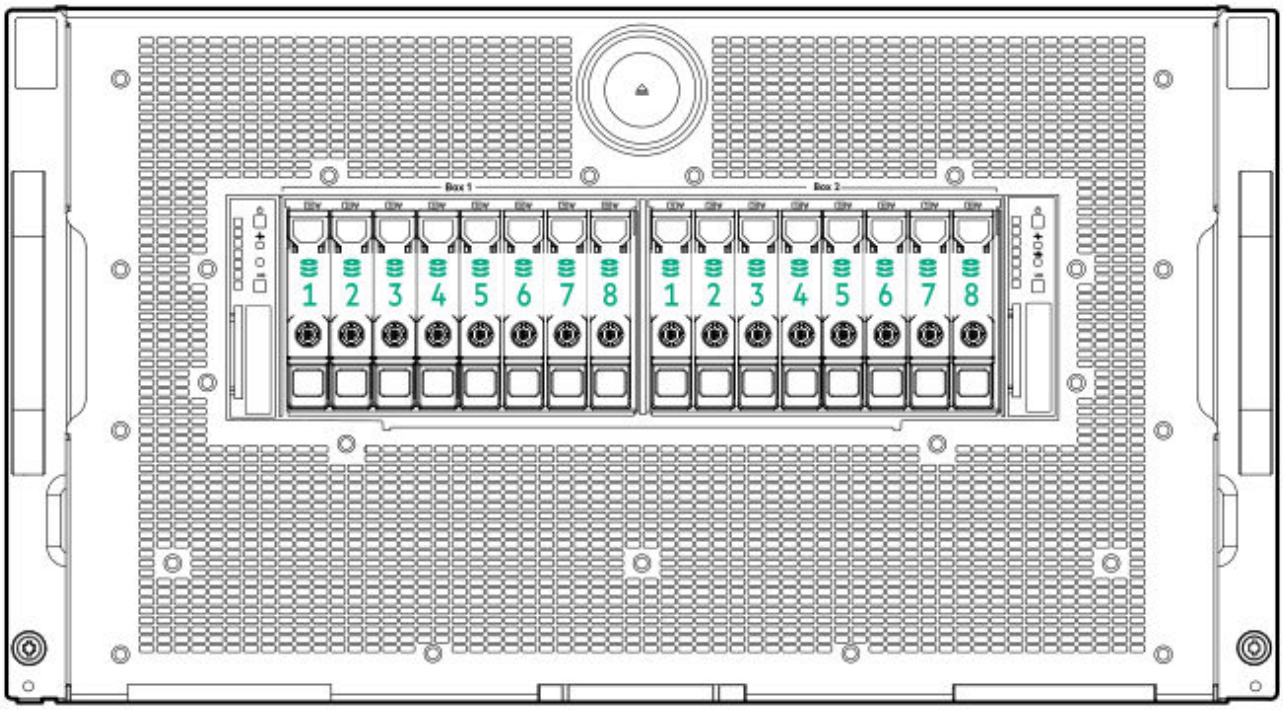

2 SAS/SATA + 2 NVMe in each node drive configuration

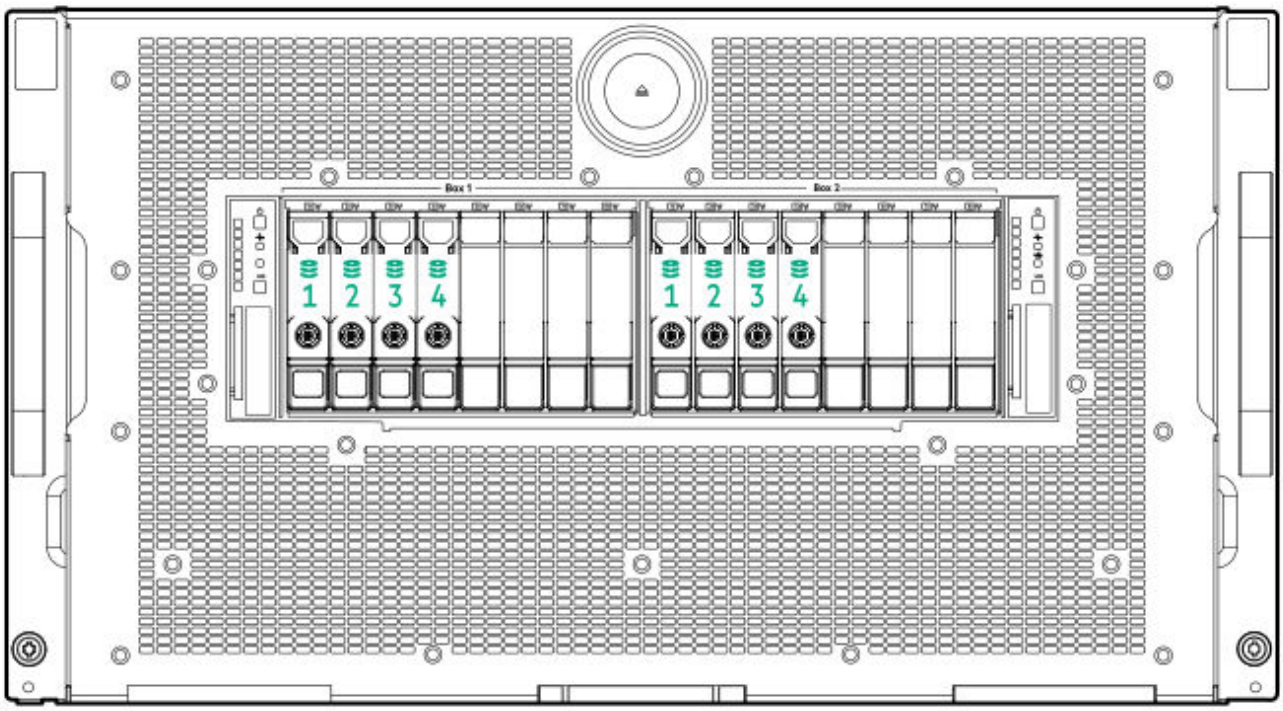

Storage controller components

For component and LED identification, see the user guide for your storage controller series on the Hewlett Packard Enterprise website (**https://www.hpe.com/info/smartstorage-docs**).

For a complete list of supported storage controller models, see the server QuickSpecs on the Hewlett Packard Enterprise website (**https://www.hpe.com/info/qs**).

NVMe adapter components

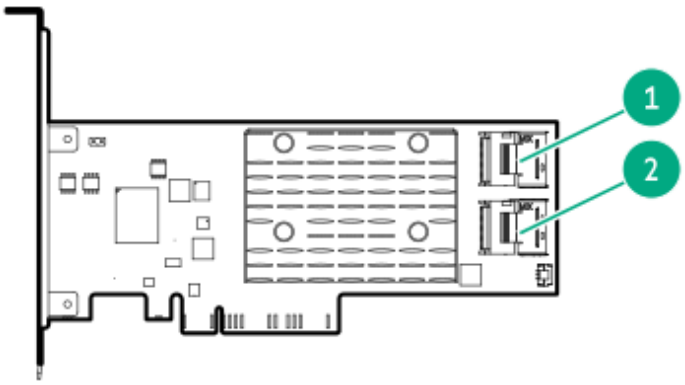

Item	Description
1	Port 1
2	Port 2

HPE NS204i-t Gen10 Plus NVMe Boot Controller components

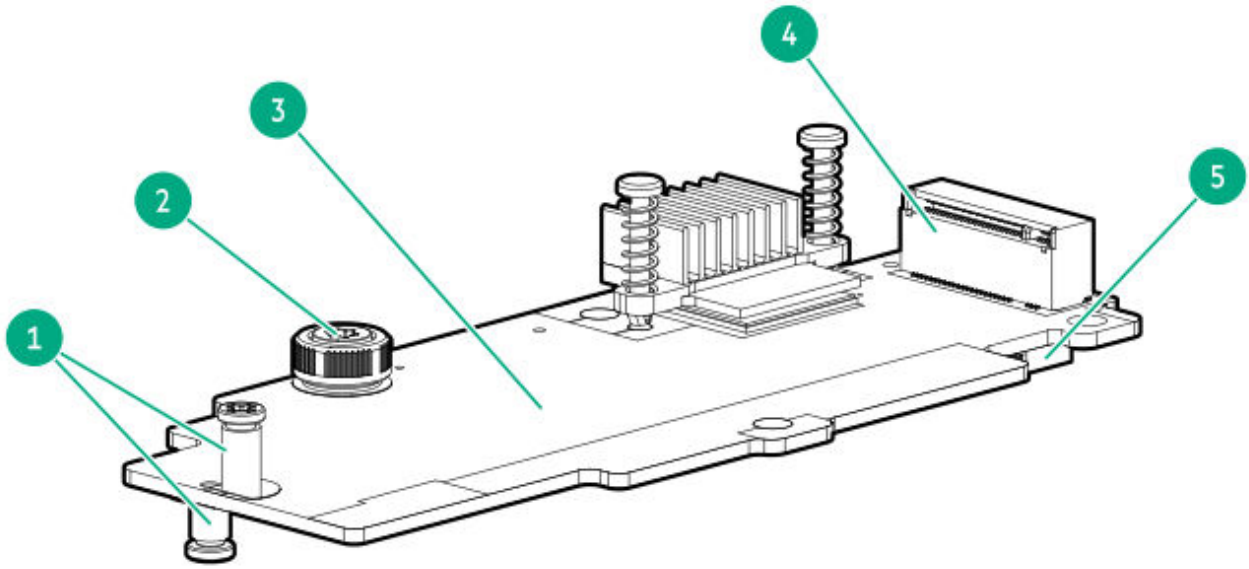

Item	Description
1	Drive retaining screws
2	Thumbscrew
3	Thermal interface pad
4	Drive bay 1
5	Drive bay 2

Operations

Subtopics

Power up the server
Power down the server
Extend the chassis from the rack
Open the chassis front door
Close the chassis front door
Remove the midplane panel
Remove the enclosure midplane
Remove the GPU tray from the chassis
Remove the system board module from the chassis
Install the system board module into the chassis
Remove the system board module access panel

Install the system board module access panel
Remove the air baffle
Install the air baffle
Remove the midplane interposer
Install the midplane interposer
Remove a PCIe riser

Power up the server

Procedure

- Press the Power On/Standby button.
- Use the virtual power button through iLO 5.

Power down the server

Before powering down the server for any upgrade or maintenance procedures, perform a backup of critical server data and programs.

> **IMPORTANT**
> When the server is in standby mode, auxiliary power is still being provided to the system.

To power down the server, use one of the following methods:

- Press and release the Power On/Standby button.
  This method activates a controlled shutdown of applications and the OS before the server enters standby mode. It can also activate a shutdown behavior governed by an OS configuration or policy.
- Press and hold the Power On/Standby button for more than 4 seconds to force the server to enter standby mode.
  This method forces the server to enter standby mode without properly exiting applications and the OS. If an application stops responding, you can use this method to force a shutdown.
- Use a virtual power button selection through iLO 5.
  This method initiates a controlled remote shutdown of applications and the OS before the server enters standby mode.

Before proceeding, verify that the server is in standby mode by observing that the system power LED is amber.

Extend the chassis from the rack

Procedure

Loosen the thumbscrews on either side of the chassis, and then extend the chassis from the rack.

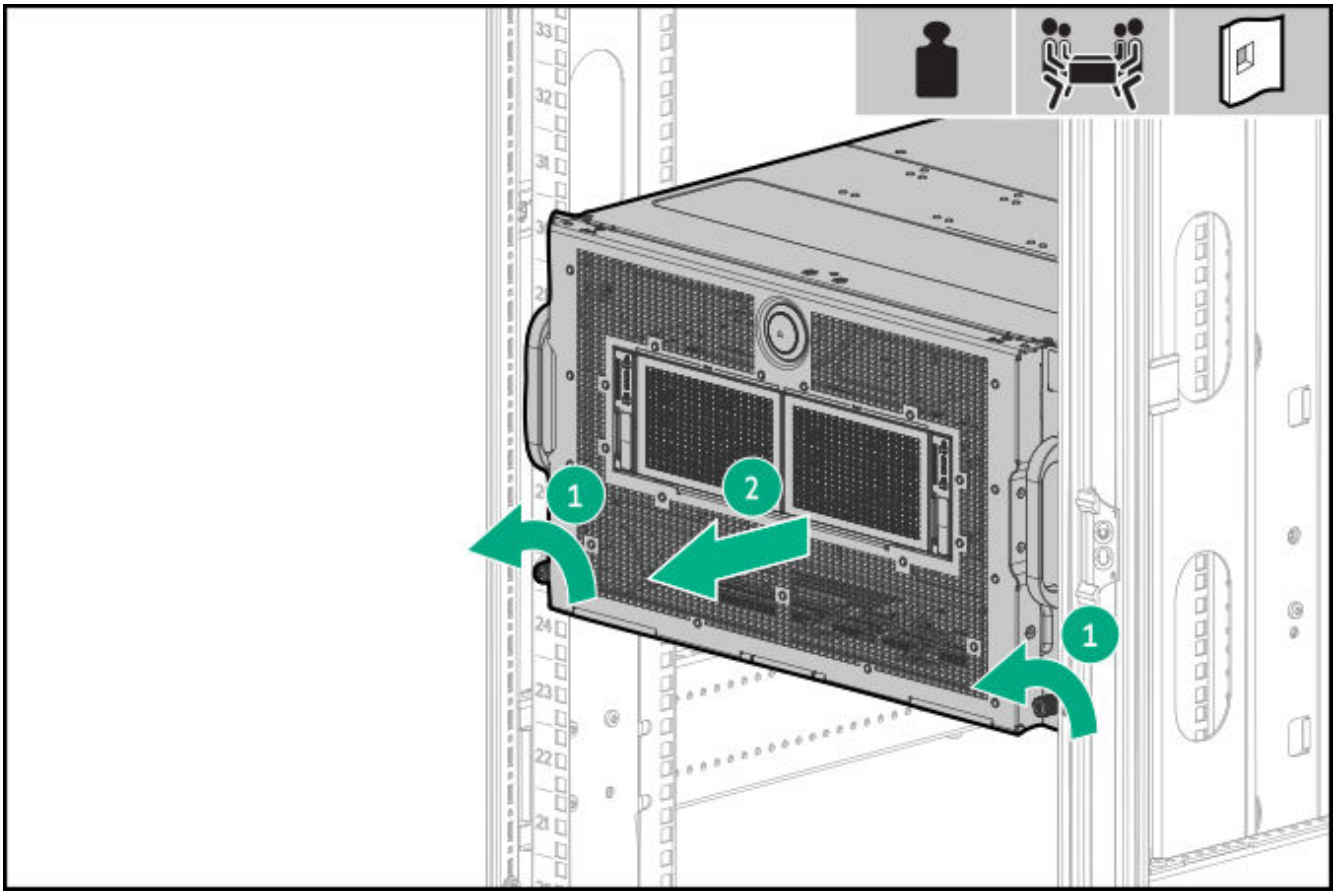

Open the chassis front door

About this task

NOTE

For proper cooling, do not exceed two minutes with the chassis front door open. Exceeding two minutes can lead to thermal damage or system shutdown.

Procedure

Open the chassis front door.

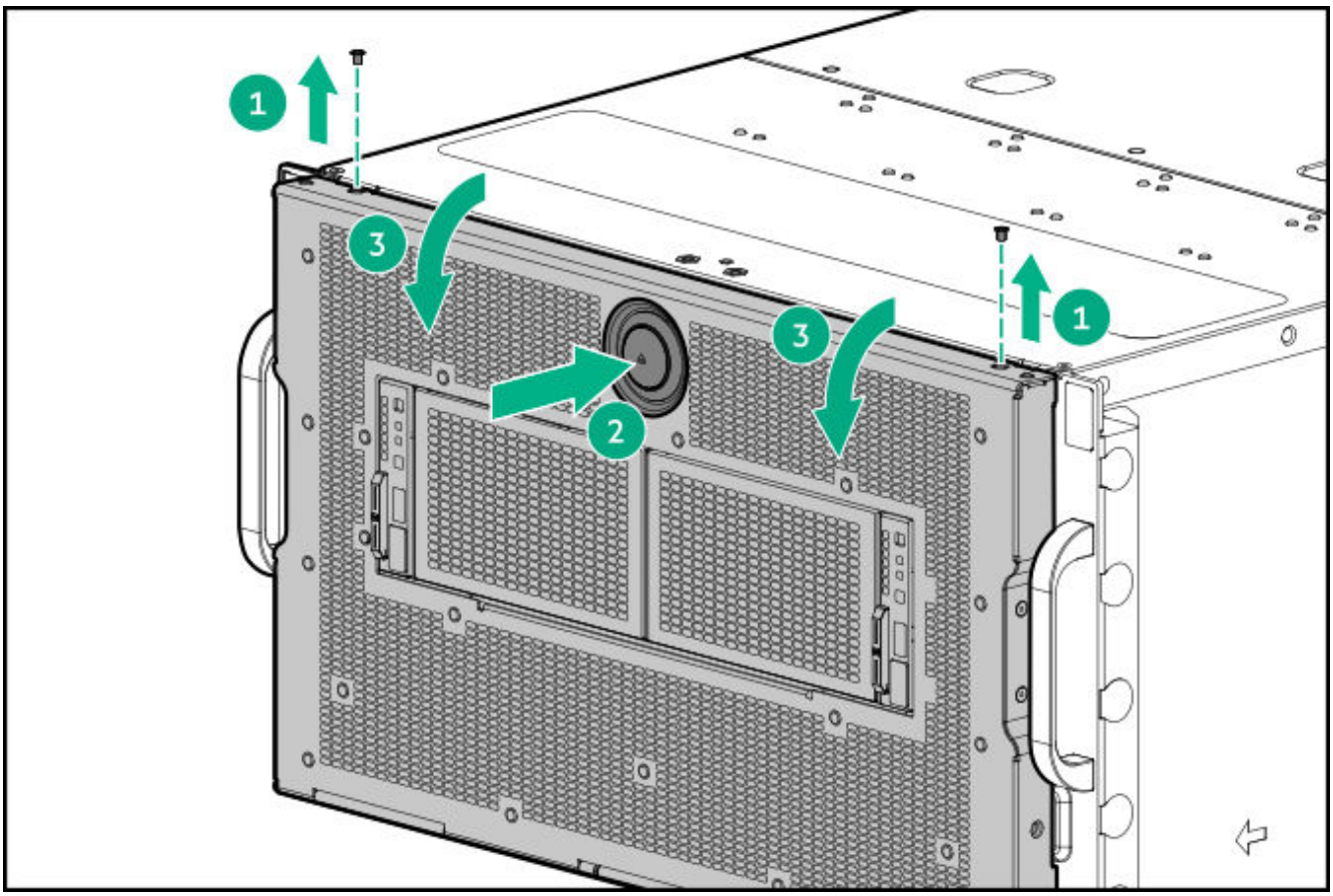

Close the chassis front door

About this task

CAUTION

For proper cooling, do not exceed two minutes with the chassis front door open. Exceeding two minutes can lead to thermal damage or system shutdown.

Procedure

Close the chassis front door.

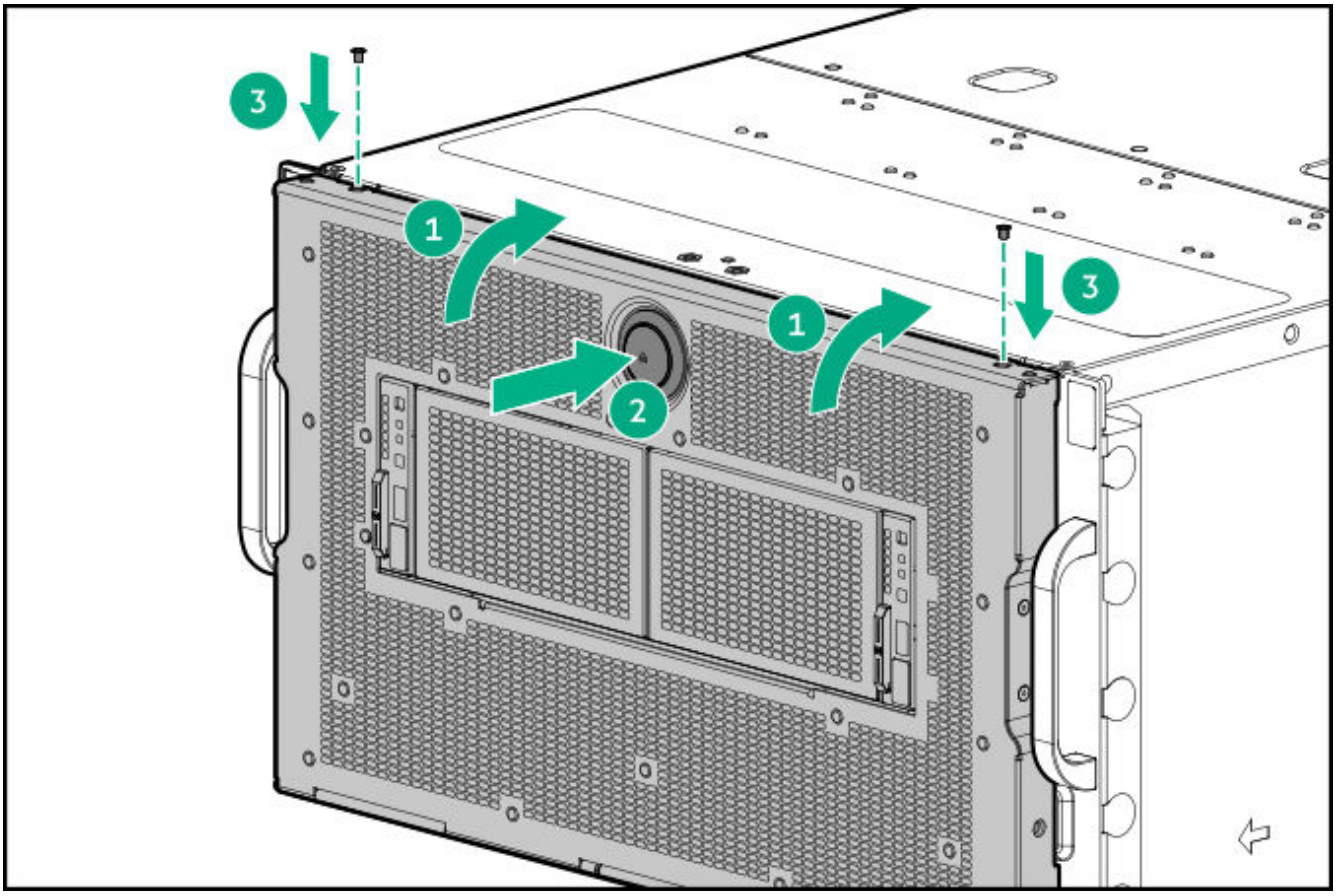

Remove the midplane panel

Procedure

1. Back up all server data.
2. .
3. Extend the chassis from the rack.
4. Remove the midplane panel.

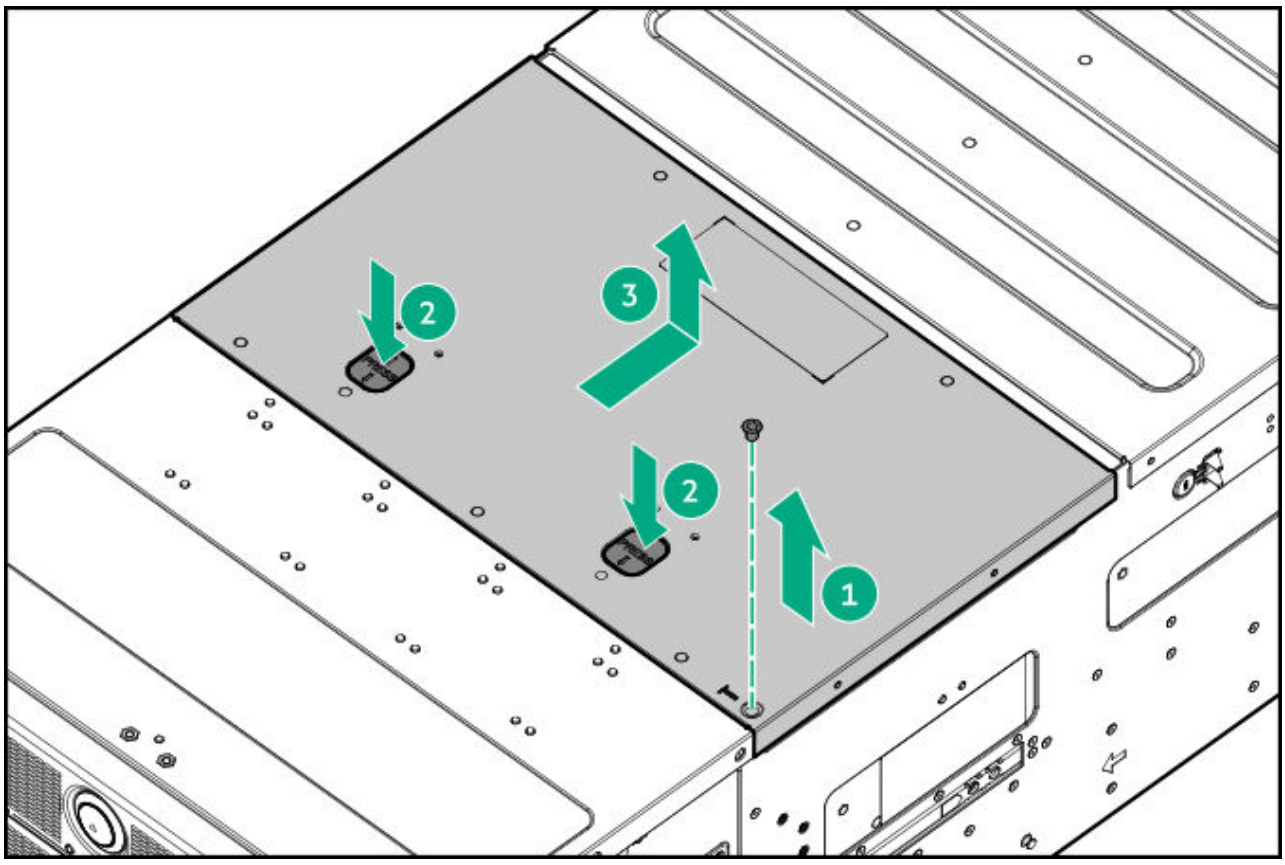

Remove the enclosure midplane

Procedure

1. Power down the server.
2. Extend the chassis from the rack.
3. Disconnect all peripheral cables from the server.
4. Remove the system board module from the chassis.
5. Remove the GPU tray.
6. Remove the power supplies.

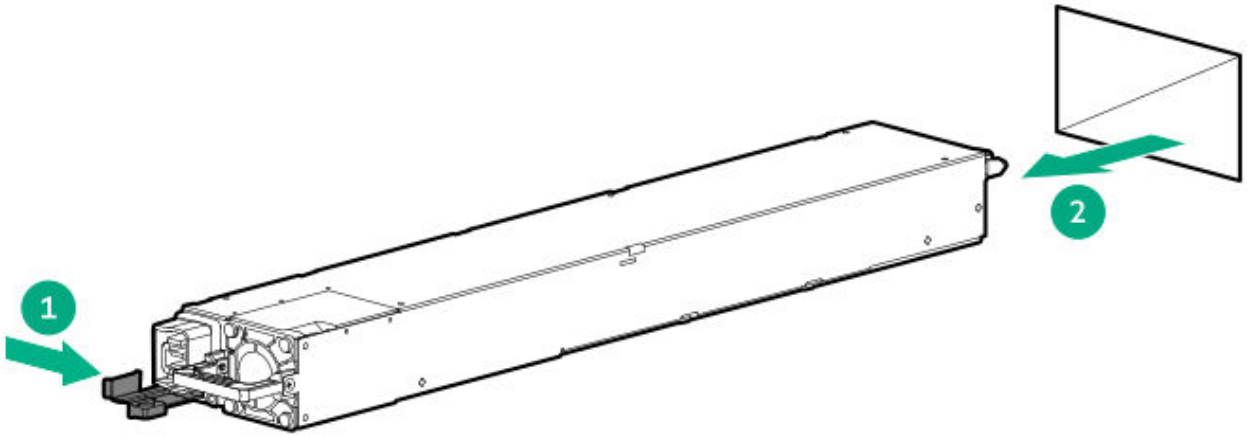

7. Remove the midplane panel.
8. Disconnect the display port cable.

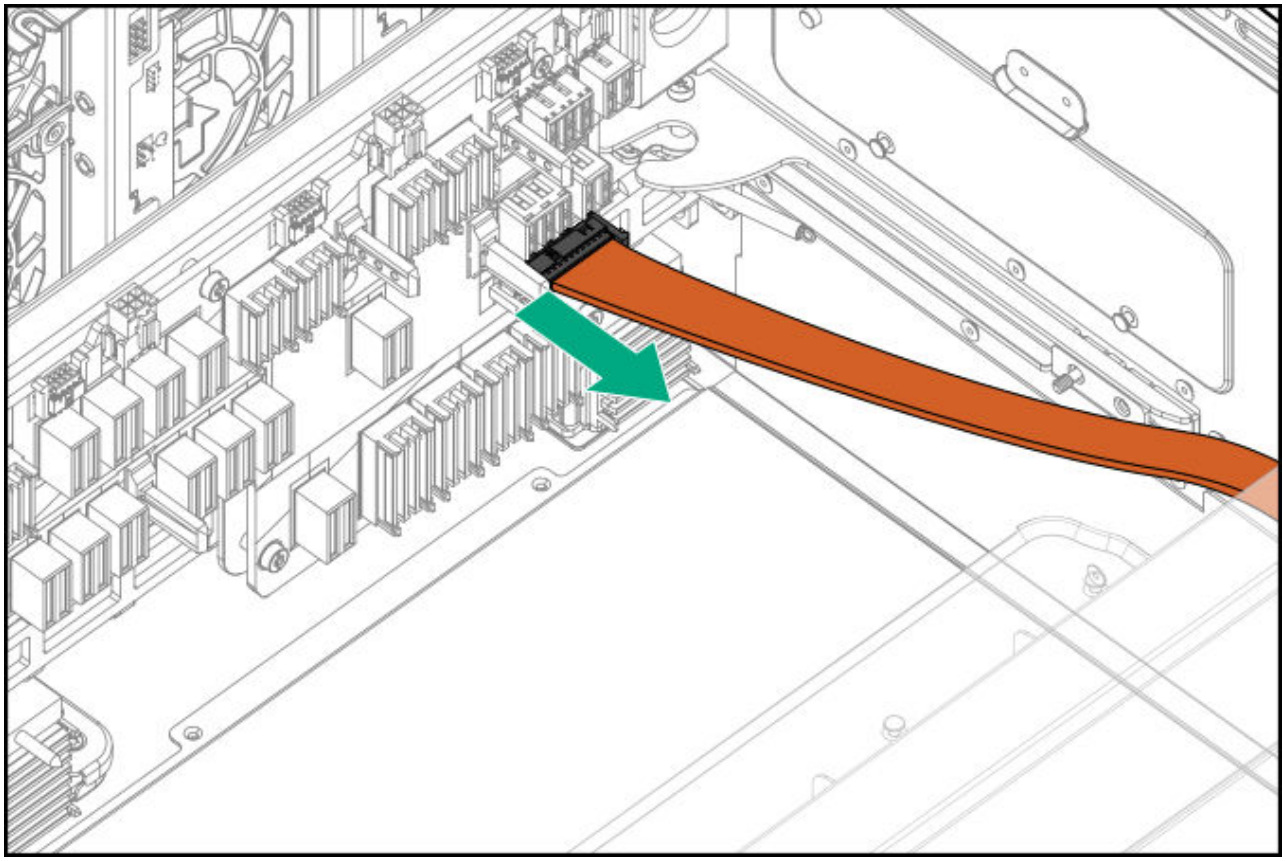

9. Remove the enclosure midplane assembly.

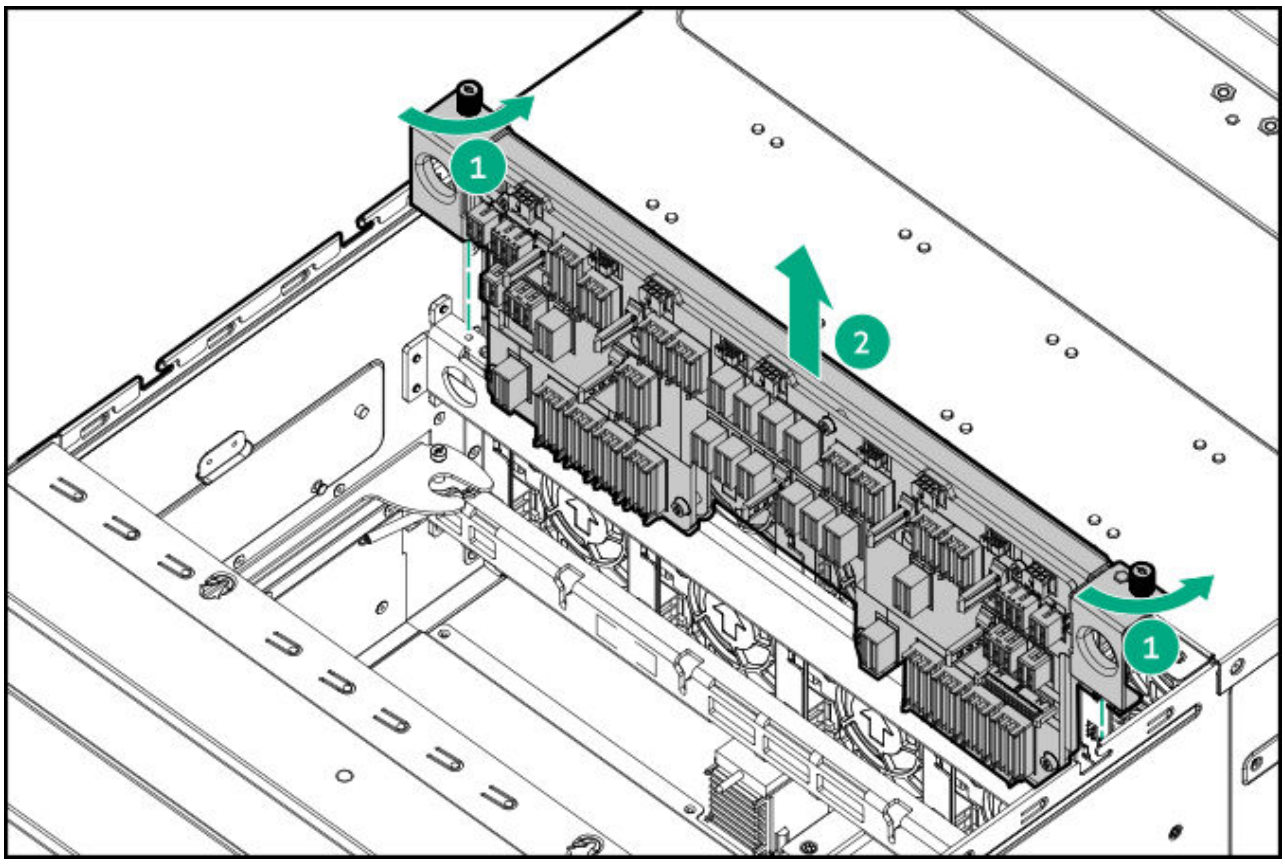

More information

Remove the midplane panel

Remove the GPU tray from the chassis

Procedure

1. Back up all server data.
2. .
3. Remove the GPU tray from the chassis.

   The right GPU tray is shown in the image. The steps for removing the left GPU tray are the same.

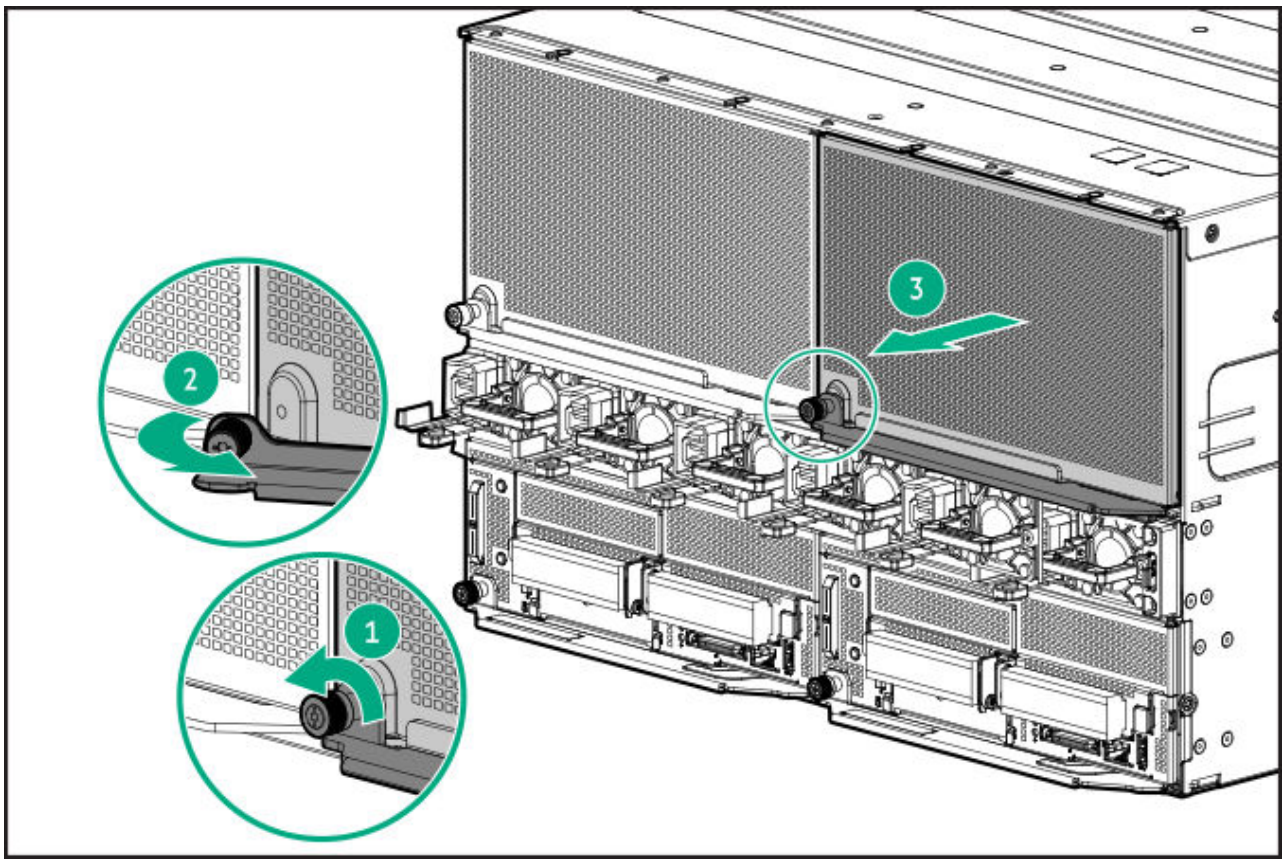

Depending on the chassis configuration, your GPU tray might look different.

Remove the system board module from the chassis

Procedure

1. Back up all server data.
2. .
3. Disconnect all peripheral cables from the server.
4. Remove the system board module from the chassis.

   The image shows removing a right system board module. The steps for removing the left system board module are the same.

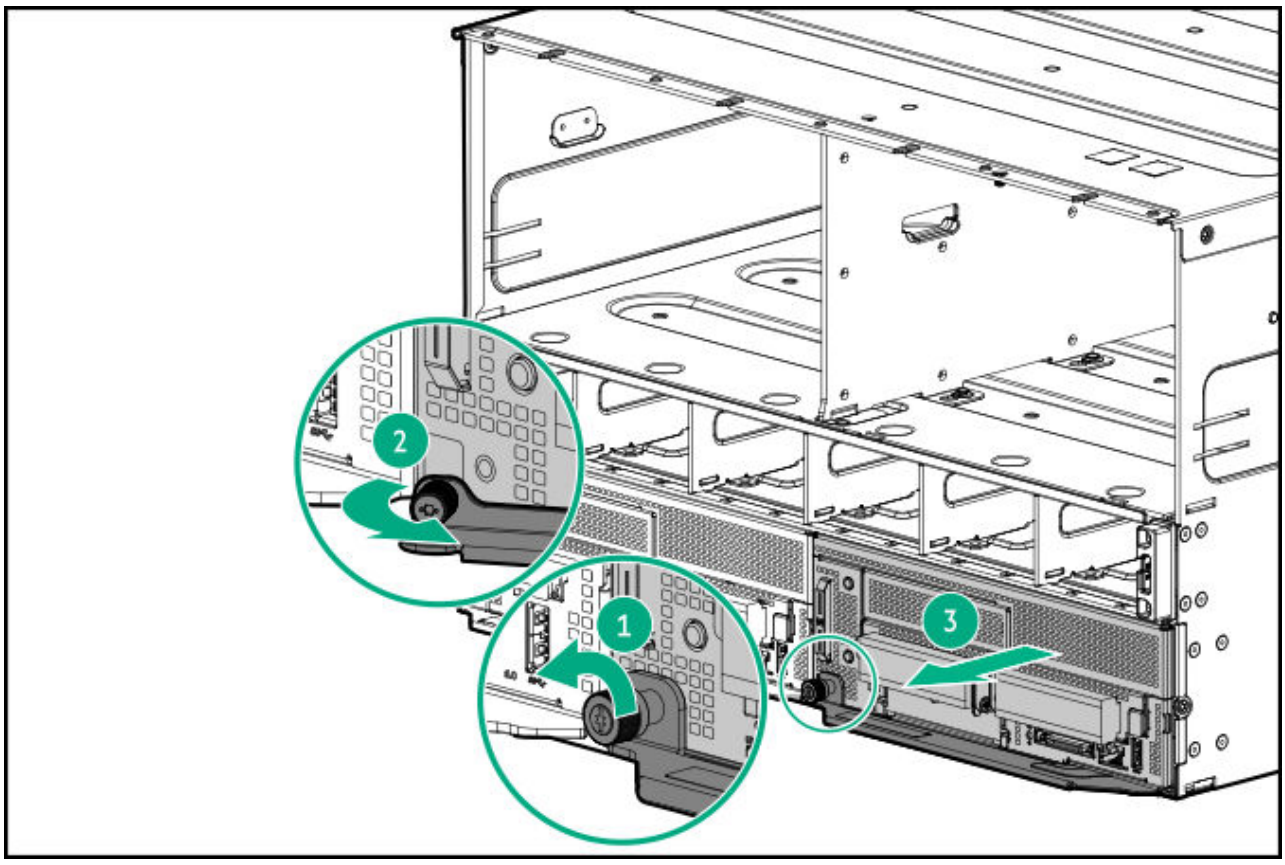

Install the system board module into the chassis

Procedure

Install the system board module into the chassis.

The image shows installing a right system board module. The steps for installing the left system board module are the same.

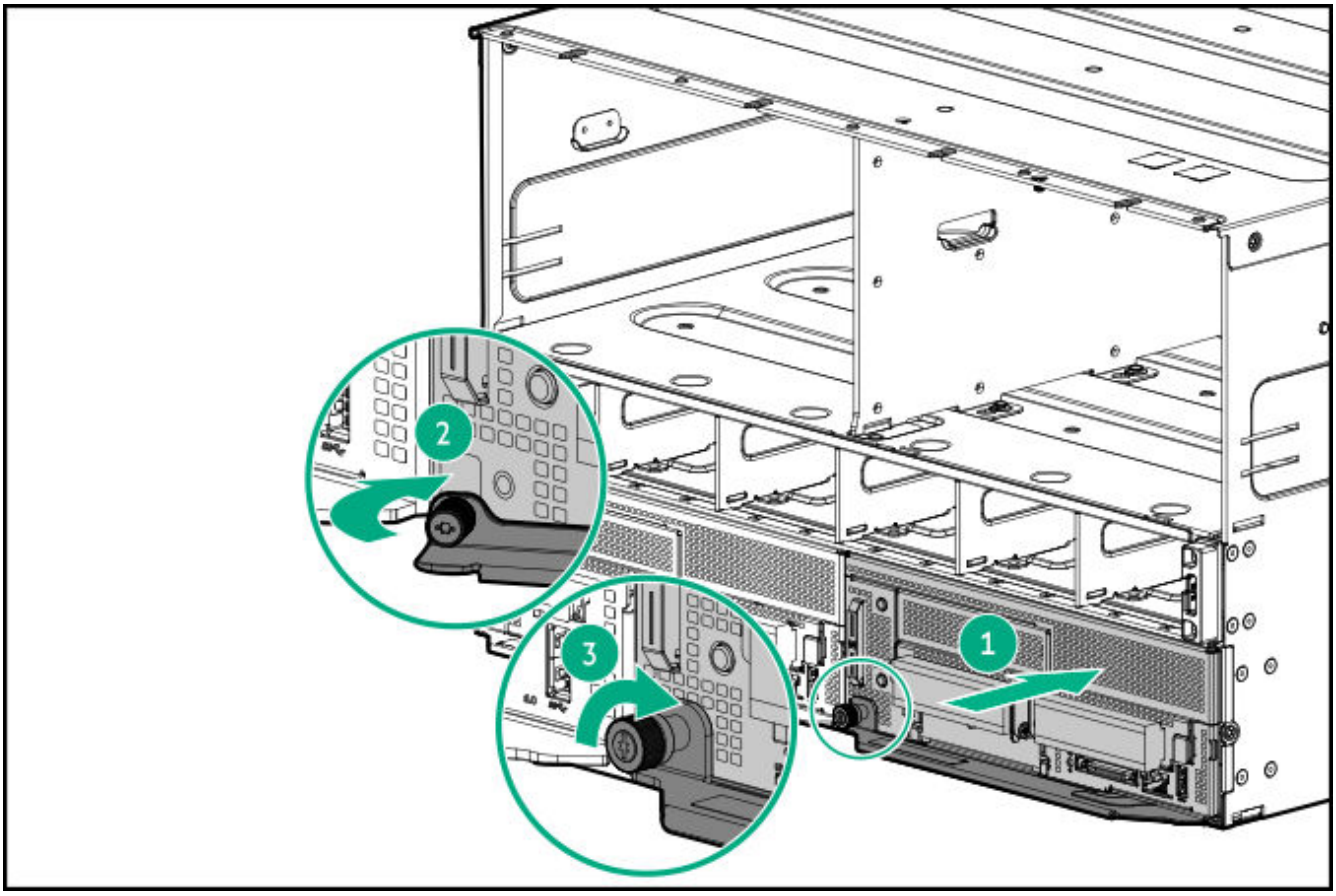
2
3
1

Remove the system board module access panel

About this task

WARNING

To reduce the risk of personal injury from hot surfaces, allow the drives and the internal system components to cool before touching them.

CAUTION

To prevent damage to electrical components, take the appropriate anti-static precautions before beginning any installation, removal, or replacement procedure. Improper grounding can cause electrostatic discharge.

CAUTION

Do not operate the server with the node cover removed. Operating the server in this manner results in improper airflow and improper cooling that can lead to thermal damage.

Procedure

1. Back up all server data.
2. .
3. Disconnect all peripheral cables from the server.
4. Remove the system board module from the chassis.
5. Place the system board module on a flat, level work surface.
6. Remove the system board module access panel.

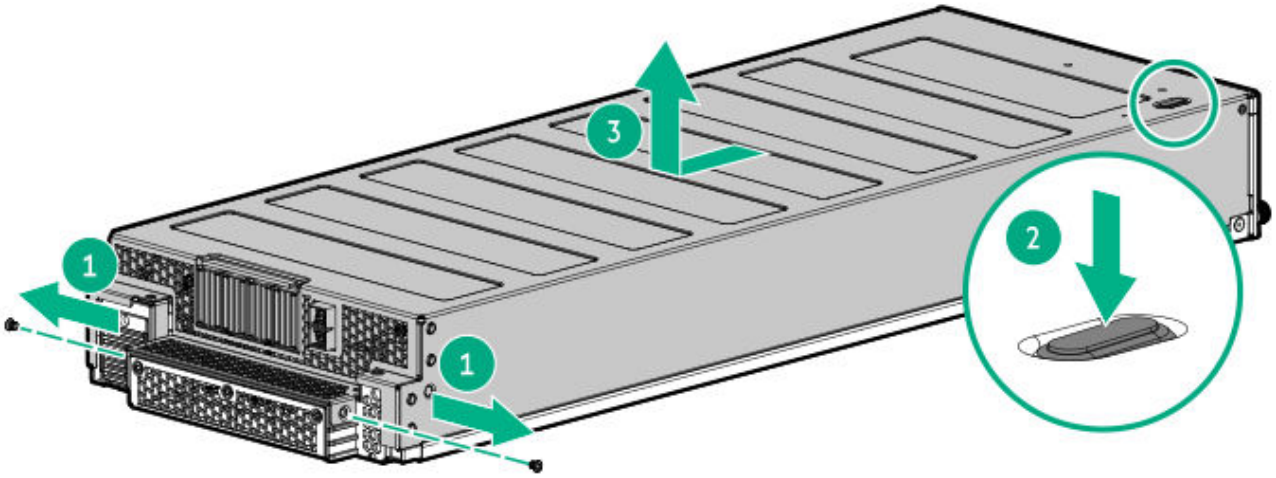

More information

[Remove the system board module from the chassis]

Install the system board module access panel

About this task

WARNING

To reduce the risk of personal injury from hot surfaces, allow the drives and the internal system components to cool before touching them.

CAUTION

To prevent damage to electrical components, take the appropriate anti-static precautions before beginning any installation, removal, or replacement procedure. Improper grounding can cause electrostatic discharge.

CAUTION

Do not operate the server with the node cover removed. Operating the server in this manner results in improper airflow and improper cooling that can lead to thermal damage.

Procedure

Install the system board module access panel.

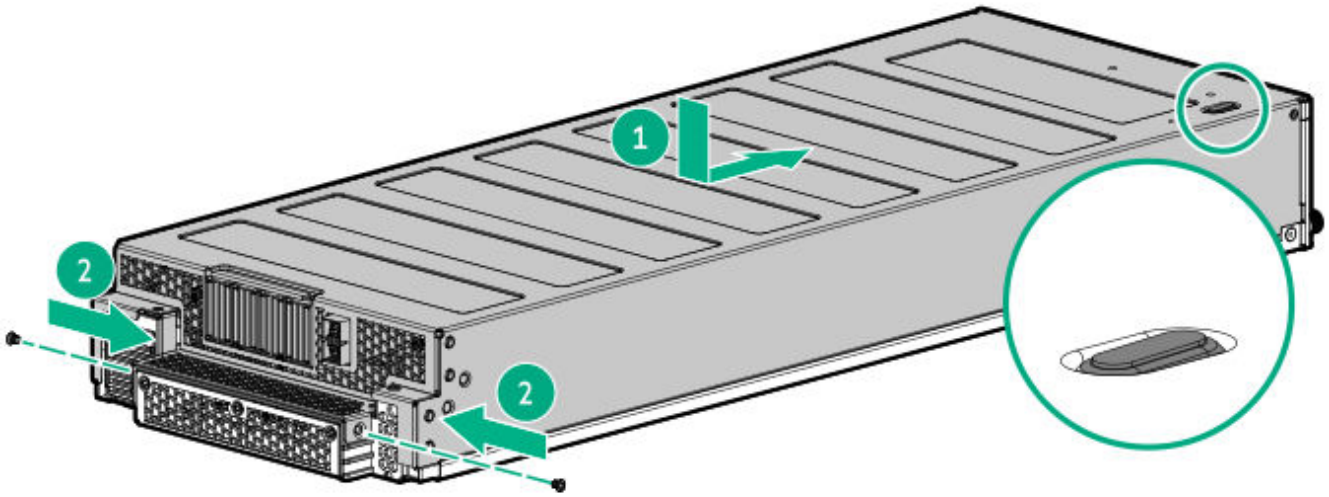

Remove the air baffle

Procedure

1. Back up all server data.
2. .
3. Disconnect all peripheral cables from the server.
4. Remove the system board module from the chassis.
5. Place the system board module on a flat, level work surface.
6. Remove the system board module access panel.
7. Remove the air baffle.

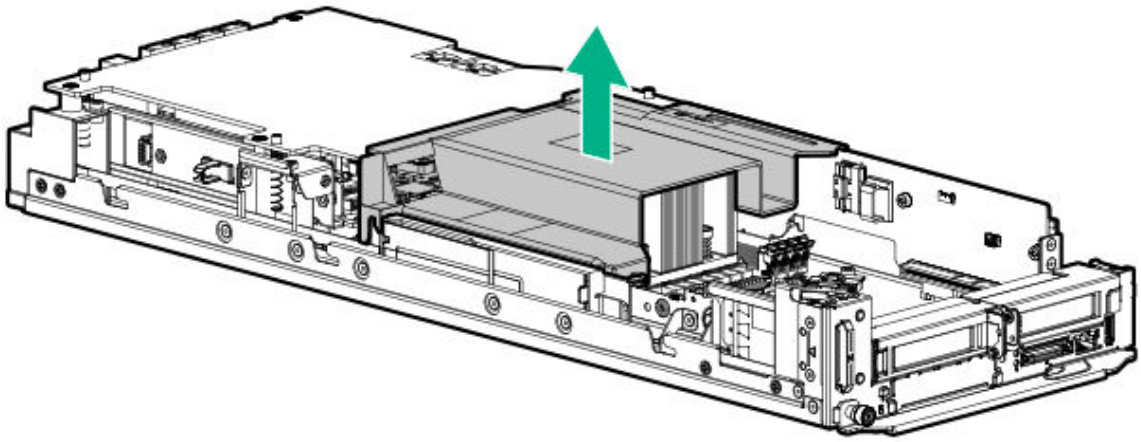

Install the air baffle

Procedure

Install the air baffle.

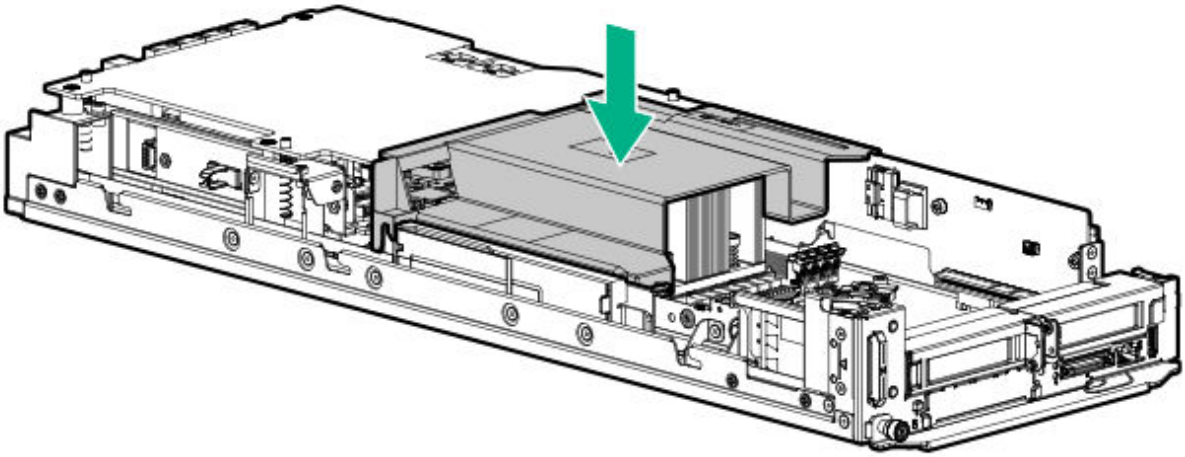

Remove the midplane interposer

Procedure

1. Back up all server data.
2. .
3. Disconnect all peripheral cables from the server.
4. Remove the system board module from the chassis.
5. Place the system board module on a flat, level work surface.
6. Remove the system board module access panel.
7. Remove the midplane interposer.

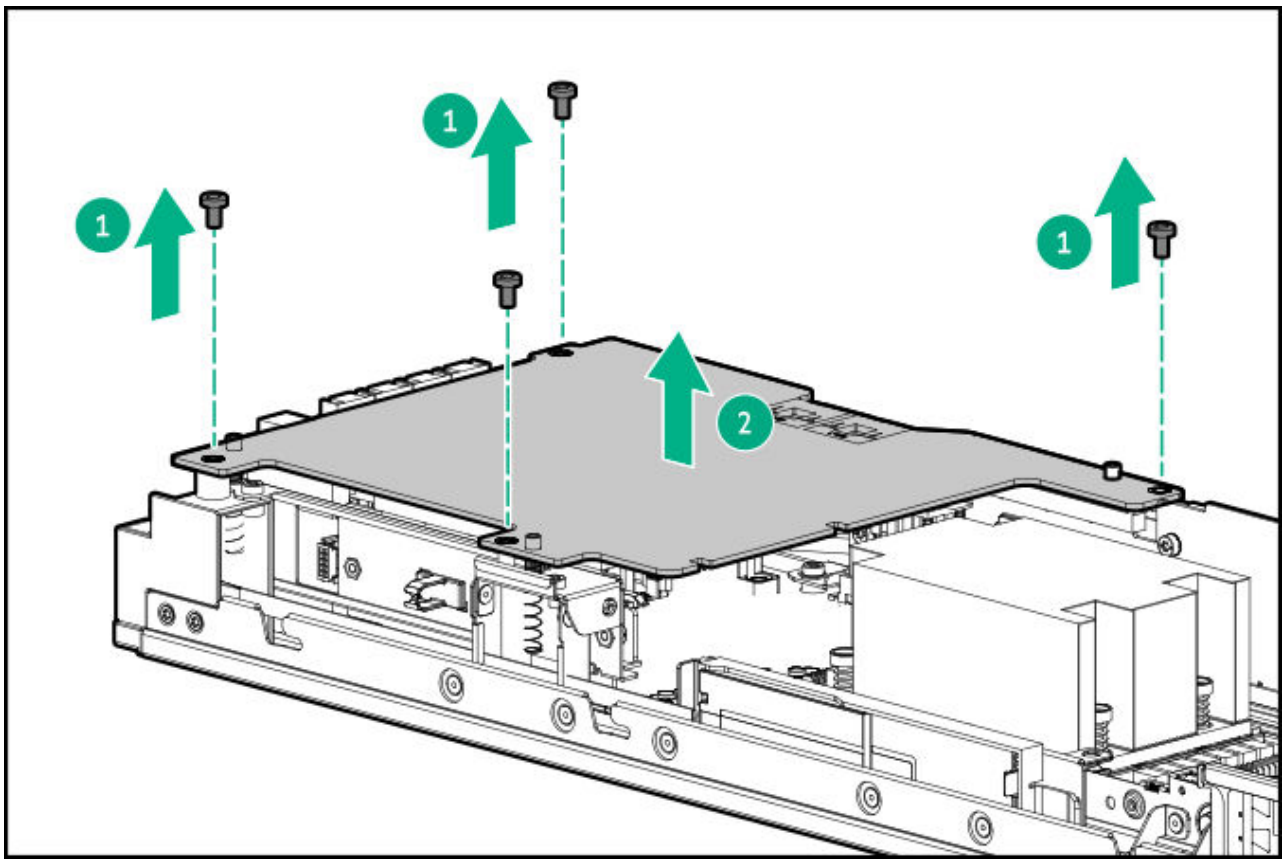

8. Remove any cables connected to the interposer.

More information

Remove the system board module from the chassis

Remove the system board module access panel

Install the midplane interposer

Procedure

Install the midplane interposer.

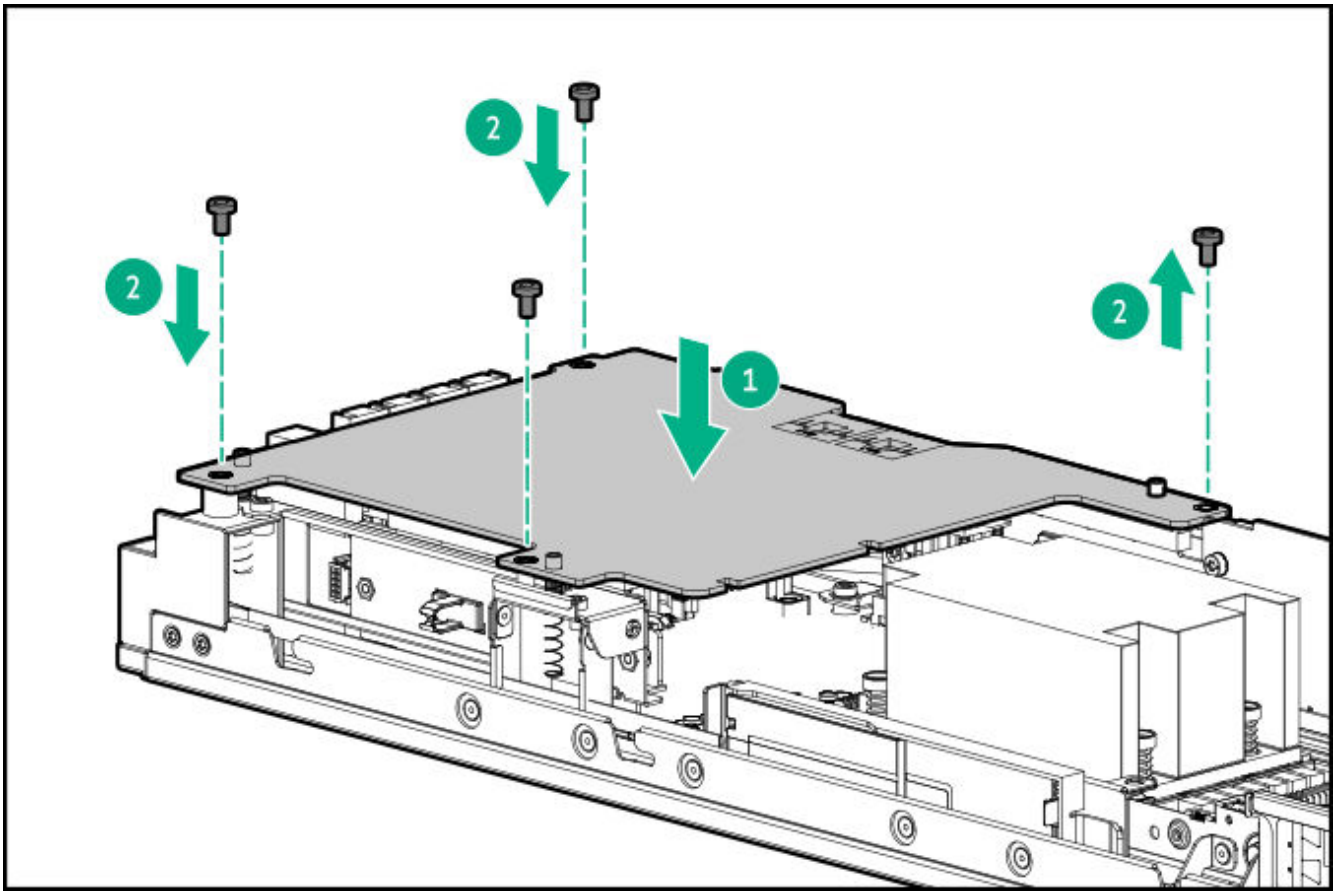

Remove a PCIe riser

Prerequisites

Before you perform this procedure, make sure that you have a T-10 Torx screwdriver available.

Procedure

1. Back up all server data.

2. .
3. Disconnect all peripheral cables from the server.
4. Remove the system board module from the chassis.
5. Place the system board module on a flat, level work surface.
6. Remove the system board module access panel.
7. Remove the midplane interposer, if removing the secondary or tertiary riser.
8. Remove the PCIe riser:
    - Primary riser

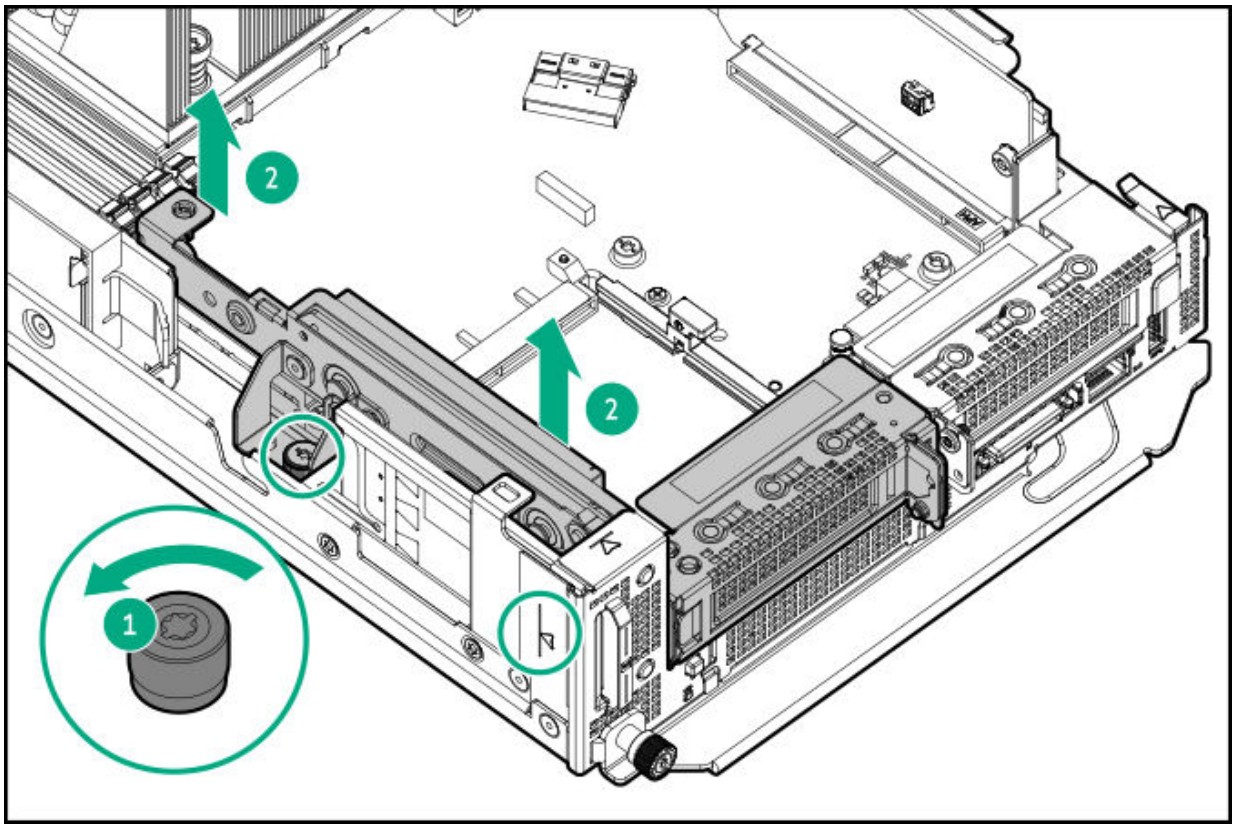

    - Secondary riser

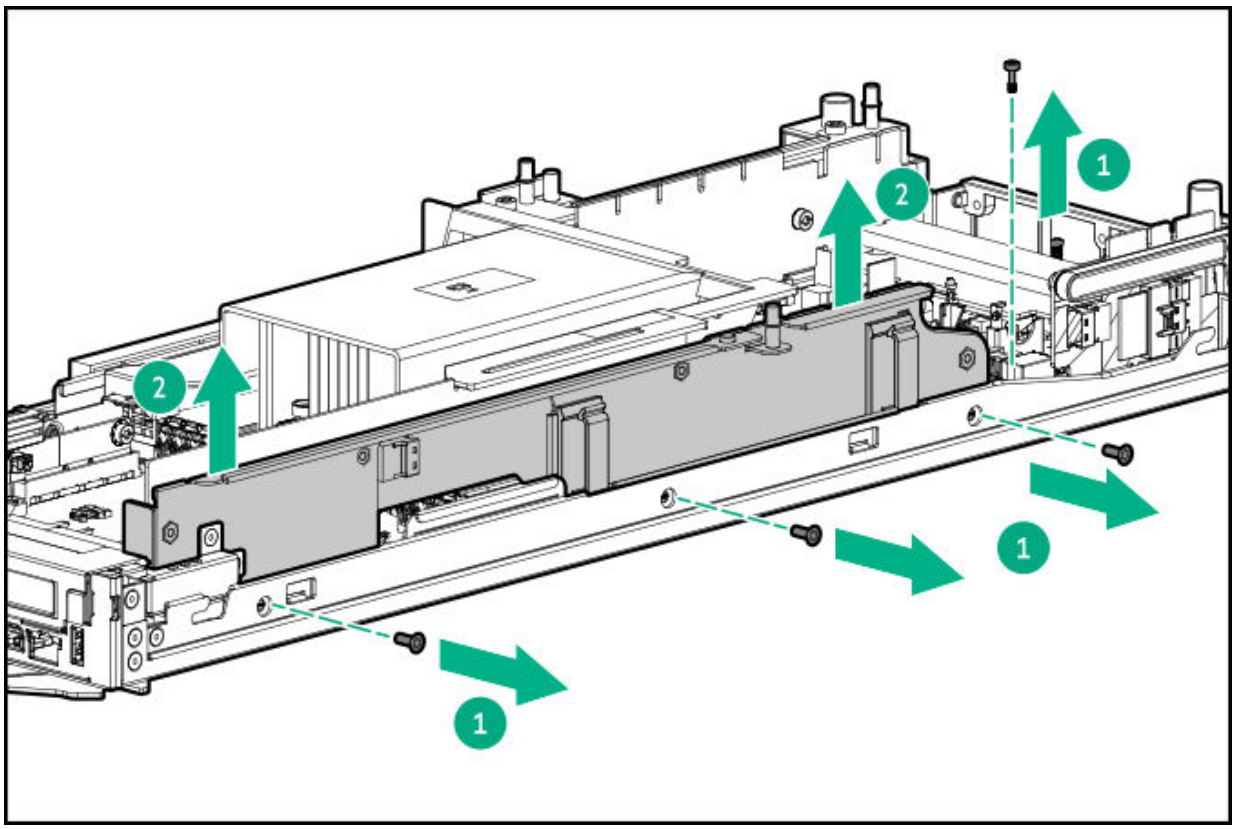

- Tertiary riser

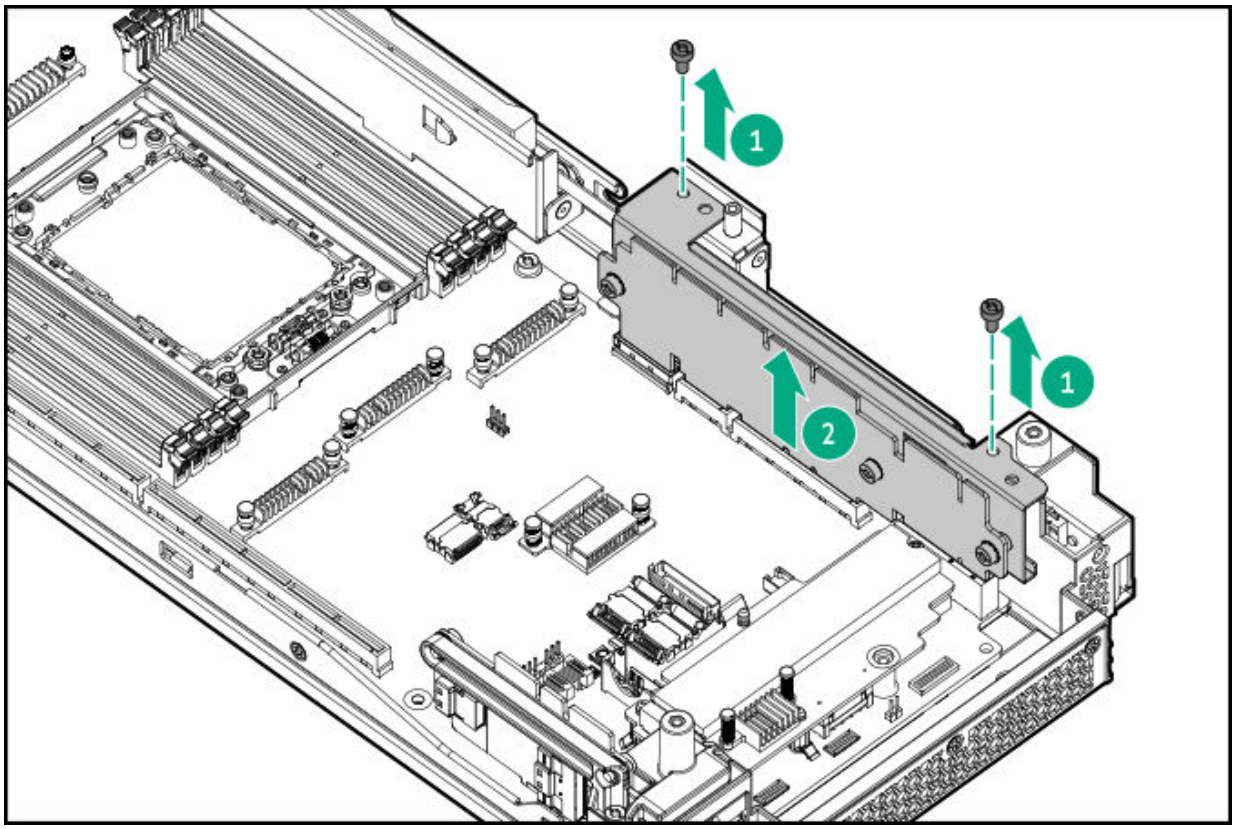

More information

Remove the system board module from the chassis
Remove the system board module access panel
Remove the midplane interposer

Setup

Subtopics

HPE support services
Compiling the documentation
Initial system installation

HPE support services

Delivered by experienced, certified engineers, HPE support services help you keep your servers up and running with support packages tailored specifically for HPE ProLiant systems. HPE support services let you integrate both hardware and software support into a single package. A number of service level options are available to meet your business and IT needs.

HPE support services offer upgraded service levels to expand the standard product warranty with easy-to-buy, easy-to-use support packages that will help you make the most of your server investments. Some of the HPE support services for hardware, software or both are:

- Foundation Care – Keep systems running.
  - 6-Hour Call-to-Repair
  - 4-Hour 24x7
  - Next Business Day
- Proactive Care – Help prevent service incidents and get you to technical experts when there is one.
  - 6-Hour Call-to-Repair
  - 4-Hour 24x7
  - Next Business Day
- Startup and implementation services for both hardware and software

- HPE Education Services – Help train your IT staff.

For more information on HPE support services, see the **Hewlett Packard Enterprise website**.

Compiling the documentation

The documentation, while delivered individually and in various formats, works as a system. Consult these documents before attempting installation. These documents provide the required important safety information and decision-making steps for the configuration. To access these documents, see the Hewlett Packard Enterprise website (**https://www.hpe.com/info/apollo6500gen10plus-docs**).

Initial system installation

Depending on your technical expertise and the complexity of the product, for the initial system installation, select one of the following options:

- Ordering the HPE Installation Service
- Setting up the server

Subtopics

HPE Installation Service
Setting up the server

HPE Installation Service

HPE Installation Service provides basic installation of Hewlett Packard Enterprise branded equipment, software products, as well as HPE-supported products from other vendors that are sold by HPE or by HPE authorized resellers. The Installation Service is part of a suite of HPE deployment services that are designed to give users the peace of mind that comes from knowing that their HPE and HPE-supported products have been installed by an HPE specialist.

The HPE Installation Service provides the following benefits:

- Installation by an HPE authorized technical specialist.
- Verification prior to installation that all service prerequisites are met.
- Delivery of the service at a mutually scheduled time convenient to your organization.

- Allows your IT resources to stay focused on their core tasks and priorities.
- Full coverage during the warranty period for products that require installation by an HPE authorized technical specialist.

For more information on the features, limitations, provisions, and ordering information of the HPE Installation Service, see this Hewlett Packard Enterprise website:

https://www.hpe.com/support/installation-service

Setting up the server

Prerequisites

Before setting up the server:

- Download the latest SPP:
  http://www.hpe.com/servers/spp/download

  Support validation required
- Verify that your OS or virtualization software is supported:
  http://www.hpe.com/info/ossupport
- Read the operational requirements for the server:
  Operational requirements
- Read the safety and compliance information on the Hewlett Packard Enterprise website:
  http://www.hpe.com/support/safety-compliance-enterpriseproducts
- Obtain the storage driver if needed:
  - Download it from the HPE support center website.
  - Extract it from the SPP.

Procedure

1. Unbox the server and verify the contents.
2. (Optional) Install hardware options.

   For installation instructions, see Hardware options installation.
3. Install the chassis in a rack.
4. Connect all peripheral cables to the chassis.
5. Decide how to manage the server:

- Locally: Use a KVM switch or a connect a keyboard, monitor, and mouse.
- Remotely: Connect to the iLO web interface and run a remote console:

  a. Verify the following:

     - iLO is licensed to use the remote console feature.
       If iLO is not licensed, visit **http://www.hpe.com/info/ilo**.
     - The iLO management port is connected to a secure network.

  b. Using a browser, navigate to the iLO web interface, and then log in.
     ```
     https://<iLO hostname or IP address>
     ```
     Note the following:

     - The hostname is on the serial pull tab.
     - If a DHCP server assigns the IP address, the IP address appears on the boot screen.
     - If a static IP address is assigned, use that IP address.
     - The default login credentials are on the serial label pull tab.

  c. In the side navigation, click the **Remote Console & Media** link, and then launch a remote console.

6. Press the Power On/Standby button.

   For remote management, use the iLO virtual power button.

7. Using the SPP, update the following:

   - System ROM
   - Storage controller
   - Network adapters
   - Intelligent Provisioning

8. To set up storage, do one of the following:

   - To configure the server to boot from a SAN, see the HPE Boot from SAN Configuration Guide guide at **https://www.hpe.com/info/boot-from-san-config-guide**.
   - If an SR controller is installed, use HPE Smart Storage Administrator to create arrays:

     a. From the boot screen, press **F10** to run Intelligent Provisioning.

     b. From Intelligent Provisioning, run HPE Smart Storage Administrator.

        For more information, see the HPE Smart Array SR Gen10 Configuration Guide at **https://www.hpe.com/support/SSC-config**.

- If no controller is installed, do one of the following:
  - AHCI is enabled by default. Proceed with deploying an OS or virtualization software.
  - Disable AHCI, enable software RAID, and then create an array:

    IMPORTANT

    HPE Smart Array S100i SR Gen10 SW RAID is only supported on Windows. For more information on Linux and VMware support, see the product QuickSpecs on the Hewlett Packard Enterprise website (**https://www.hpe.com/support/S100i-qs**).

    a. From the boot screen, press **F9** to run UEFI System Utilities.

    b. Select **System Configurations > BIOS/Platform Configuration (RBSU) > Storage Options > SATA Controller Options > Embedded SATA configuration > Smart Array SW RAID Support**.

    c. Enable SW RAID.

    d. Save the configuration and reboot the server.

    e. Create an array using either the UEFI System Utilities or HPE Smart Storage Administrator. To use the UEFI System Utilities:

       i. From the boot screen, press **F9** to run UEFI System Utilities.

       ii. Select **System Configuration** > **Embedded Storage: HPE Smart Storage S100i SR Gen10** > **Array Configuration** > **Create Array**.

    For more information on creating arrays using the HPE Smart Storage Administrator, see the HPE Smart Array SR Gen10 Configuration Guide at **https://www.hpe.com/support/SSC-config**.

9. Set the server power supply requirements.

.0. To deploy an OS or virtualization software, do one of the following:

- To deploy an OS, run Intelligent Provisioning.

  Press **F10** at the boot screen.

  IMPORTANT

  Smart array MR controllers are not supported by Intelligent Provisioning or Smart Storage Administrator.

- Manually deploy an OS.

  a. Insert the installation media.

     For remote management, click **Virtual Drives** in the iLO remote console to mount images, drivers, or files to a virtual folder. If a storage driver is required to install the OS, use the virtual folder to store the driver.

  b. To select the boot device, press **F11** at the boot screen.

  c. After the OS is installed, update the drivers.

.1. Register the server (**http://www.hpe.com/info/register**).

Subtopics

General site planning
Operational requirements
Server warnings and cautions
Safety and regulatory compliance
Determining power and cooling configurations
Electrostatic discharge
Identifying the contents of the shipping carton
Installation overview

General site planning

Before you begin installing the HPE Apollo 6500 Gen10 Plus System, Hewlett Packard Enterprise recommends that you plan and coordinate the installation process with an authorized HPE representative or partner. Proper planning provides a more efficient installation process and leads to greater availability, reliability, and serviceability of the system.

Operational requirements

Subtopics

Site requirements
Space and airflow requirements
Temperature requirements
Power requirements
Electrical grounding requirements

Site requirements

The server must be located in a computer room or server room. The room must:

- Be only accessible to authorized technicians trained the room restriction reasons and precautions.
- Be within an area that is ideally locked or at minimum not accessible to unauthorized personnel.

Space and airflow requirements

To allow for servicing and adequate airflow, observe the following space and airflow requirements when deciding where to install a rack:

- Leave a minimum clearance of 63.5 cm (25 in) in front of the rack.
- Leave a minimum clearance of 76.2 cm (30 in) behind the rack.
- Leave a minimum clearance of 121.9 cm (48 in) from the back of the rack to the back of another rack or row of racks.

Hewlett Packard Enterprise servers draw in cool air through the front door and expel warm air through the rear door. Therefore, the front and rear rack doors must be adequately ventilated to allow ambient room air to enter the cabinet, and the rear door must be adequately ventilated to allow the warm air to escape from the cabinet.

CAUTION

To prevent improper cooling and damage to the equipment, do not block the ventilation openings.

When vertical space in the rack is not filled by a server or rack component, the gaps between the components cause changes in airflow through the rack and across the servers. Cover all gaps with blanking panels to maintain proper airflow.

CAUTION

Always use blanking panels to fill empty vertical spaces in the rack. This arrangement ensures proper airflow. Using a rack without blanking panels results in improper cooling that can lead to thermal damage.

The 9000 and 10000 Series Racks provide proper server cooling from flow-through perforations in the front and rear doors that provide 64 percent open area for ventilation.

CAUTION

When using a Compaq branded 7000 series rack, install the high airflow rack door insert (PN 327281-B21 for 42U rack, PN 157847-B21 for 22U rack) to provide proper front-to-back airflow and cooling.

CAUTION

If a third-party rack is used, observe the following additional requirements to ensure adequate airflow and to prevent damage to the equipment:

- Front and rear doors—If the 42U rack includes closing front and rear doors, you must allow 5,350 sq cm (830 sq in) of holes evenly distributed from top to bottom to permit adequate airflow (equivalent to the required 64 percent open area for ventilation).
- Side—The clearance between the installed rack component and the side panels of the rack must be a minimum of 7 cm (2.75 in).

Temperature requirements

To ensure continued safe and reliable equipment operation, install or position the system in a well-ventilated, climate-controlled environment.

The maximum recommended ambient operating temperature (TMRA) for most server products is 35°C (95°F). The temperature in the room where the rack is located must not exceed 35°C (95°F).

CAUTION

To reduce the risk of damage to the equipment when installing third-party options:

- Do not permit optional equipment to impede airflow around the server or to increase the internal rack temperature beyond the maximum allowable limits.
- Do not exceed the manufacturer's TMRA.

Power requirements

Installation of this equipment must comply with local and regional electrical regulations governing the installation of IT equipment by licensed electricians. This equipment is designed to operate in installations covered by NFPA 70, 1999 Edition (National Electric Code) and NFPA-75, 1992 (code for Protection of Electronic Computer/Data Processing Equipment). For electrical power ratings on options, refer to the product rating label or the user documentation supplied with that option.

WARNING

To reduce the risk of personal injury, fire, or damage to the equipment, do not overload the AC supply branch circuit that provides power to the rack. Consult the electrical authority having jurisdiction over wiring and installation requirements of your facility.

CAUTION

Protect the system board module from power fluctuations and temporary interruptions with a regulating UPS. This device protects the hardware from damage caused by power surges and voltage spikes and keeps the system board module in operation during a power failure.

Electrical grounding requirements

The server must be grounded properly for proper operation and safety. In the United States, you must install the equipment in accordance with NFPA 70, National Electric Code Article 250, as well as any local and regional building codes. In Canada, you must install the equipment in accordance with Canadian Standards Association, CSA C22.1, Canadian Electrical Code. In all other countries, you must install the equipment in accordance with any regional or national electrical wiring codes, such as the International Electrotechnical Commission (IEC) Code 364, parts 1 through 7. Furthermore, you must be sure that all power distribution devices used in the installation, such as branch wiring and receptacles, are listed or certified grounding-type devices.

Because of the high ground-leakage currents associated with multiple servers connected to the same power source, Hewlett Packard Enterprise recommends the use of a PDU that is either permanently wired to the building's branch circuit or includes a nondetachable cord that is wired to an industrial-style plug. NEMA locking-style plugs or those complying with IEC 60309 are considered suitable for this purpose. Using common power outlet strips for the server is not recommended.

Server warnings and cautions

WARNING

To reduce the risk of personal injury, electric shock, or damage to the equipment, disconnect the power cord to remove power from the server. Pressing the Power On/Standby button does not shut off system power completely. Portions of the power supply and some internal circuitry remain active until AC power is removed.

WARNING

To reduce the risk of personal injury from hot surfaces, allow the drives and the internal system components to cool before touching them.

WARNING

To reduce the risk of electric shock or damage to the equipment:

- Never reach inside the chassis while the system is powered up.
- Perform service on system components only as instructed in the user documentation.

WARNING

To reduce the risk of fire or burns after removing the energy pack:

- Do not disassemble, crush, or puncture the energy pack.
- Do not short external contacts.
- Do not dispose of the energy pack in fire or water.
- Do not expose the energy pack to low air pressure as it might lead to explosion or leakage of flammable liquid or gas.
- Do not expose the energy pack to temperatures higher than 60°C (140°F).

After power is disconnected, battery voltage might still be present for 1s to 160s.

CAUTION

Protect the system board module from power fluctuations and temporary interruptions with a regulating UPS. This device protects the hardware from damage caused by power surges and voltage spikes and keeps the system board module in operation during a power failure.

Safety and regulatory compliance

For important safety, environmental, and regulatory information, see Safety and Compliance Information for Server, Storage, Power, Networking, and Rack Products, available at the Hewlett Packard Enterprise website (**https://www.hpe.com/support/Safety-Compliance-EnterpriseProducts**).

Determining power and cooling configurations

Validate power and cooling requirements based on location and installed components.

Subtopics

Power requirements
Hot-plug power supply calculations

Power requirements

Installation of this equipment must comply with local and regional electrical regulations governing the installation of IT equipment by licensed electricians. This equipment is designed to operate in installations covered by NFPA 70, 1999 Edition (National Electric Code) and NFPA-75, 1992 (code for Protection of Electronic Computer/Data Processing Equipment). For electrical power ratings on options, refer to the product rating label or the user documentation supplied with that option.

WARNING

To reduce the risk of personal injury, fire, or damage to the equipment, do not overload the AC supply branch circuit that provides power to the rack. Consult the electrical authority having jurisdiction over wiring and installation requirements of your facility.

CAUTION

Protect the system board module from power fluctuations and temporary interruptions with a regulating UPS. This device protects the hardware from damage caused by power surges and voltage spikes and keeps the system board module in operation during a power failure.

Hot-plug power supply calculations

For more information on the hot-plug power supply and calculators to determine server power consumption in various system configurations, see the Hewlett Packard Enterprise Power Advisor website (**https://www.hpe.com/info/poweradvisor/online**).

Electrostatic discharge

Be aware of the precautions you must follow when setting up the system or handling components. A discharge of static electricity from a finger or other conductor may damage system boards or other static-sensitive devices. This type of damage may reduce the life expectancy of the system or component.

To prevent electrostatic damage:

- Avoid hand contact by transporting and storing products in static-safe containers.
- Keep electrostatic-sensitive parts in their containers until they arrive at static-free workstations.
- Place parts on a grounded surface before removing them from their containers.
- Avoid touching pins, leads, or circuitry.
- Always be properly grounded when touching a static-sensitive component or assembly. Use one or more of the following methods when handling or installing electrostatic-sensitive parts:
  - Use a wrist strap connected by a ground cord to a grounded workstation or computer chassis. Wrist straps are flexible straps with a minimum of 1 megohm ±10 percent resistance in the ground cords. To provide proper ground, wear the strap snug against the skin.
  - Use heel straps, toe straps, or boot straps at standing workstations. Wear the straps on both feet when standing on conductive floors or dissipating floor mats.
  - Use conductive field service tools.
  - Use a portable field service kit with a folding static-dissipating work mat.

  If you do not have any of the suggested equipment for proper grounding, have an authorized reseller install the part.

For more information on static electricity or assistance with product installation, contact an authorized reseller.

Identifying the contents of the shipping carton

Unpack the shipping carton and locate the materials and documentation necessary for installing the chassis . All the rack mounting hardware necessary for installing the chassis into the rack is included with the rack or the chassis.

The contents of the shipping carton include:

- Chassis
- Power cord
- Hardware documentation and software products
- Rack-mounting hardware and documentation

You might also need the following items:

- Operating system or application software
- Hardware options
- Screwdrivers
  - T-10 Torx
  - T-15 Torx
  - T-30 Torx

Installation overview

About this task

Installation of a server requires the following steps:

Procedure

1. Installing the chassis into the rack.
2. Install any server options.
3. Install the operating system.
4. Install system software.
5. Register the server.

Subtopics

Installing the chassis into the rack
Installing hardware options
Operating system
POST screen options
Registering the server

Installing the chassis into the rack

Prerequisites

Before installing the chassis, observe all necessary warnings and cautions.

About this task

CAUTION

Always plan the rack installation so that the heaviest item is on the bottom of the rack. Install the heaviest item first, and continue to populate the rack from the bottom to the top.

Procedure

1. Unpack the system and remove all components from the chassis.
2. Install the chassis into the rack. For more information, see the installation instructions that ship with the selected rail system.
3. Install options in the chassis.
4. Install all components in their original locations in the chassis.
5. Connect the power cords to the rear of the chassis.

6. Connect the system to the power source.

WARNING

To reduce the risk of electric shock or damage to the equipment:

- Do not disable the power cord grounding plug. The grounding plug is an important safety feature.
- Plug the power cord into a grounded (earthed) electrical outlet that is easily accessible at all times.
- Unplug the power cord from the power supply to disconnect power to the equipment.
- Do not route the power cord where it can be walked on or pinched by items placed against it. Pay particular attention to the plug, electrical outlet, and the point where the cord extends from the server.

Subtopics

Installing the product in the rack

Installing the product in the rack

About this task

WARNING

To reduce the risk of personal injury or equipment damage, be sure that the rack is adequately stabilized before installing the chassis.

WARNING

To reduce the risk of personal injury or equipment damage, do one the following:

- If the chassis is empty, use at least 2 people to lift and stabilize the product pieces during assembly.
- If the chassis is fully loaded, use at least 4 people to lift and stabilize the product pieces during assembly.
- Use a lift that can handle the load of the product.

CAUTION

Be sure to keep the product parallel to the floor when installing the chassis. Tilting the product up or down could result in damage to the slides.

Procedure

WARNING

On both sides, align the three alignment pins on the chassis with the channel in the rails. Otherwise, the chassis can fall if the rack is moved or shipped.

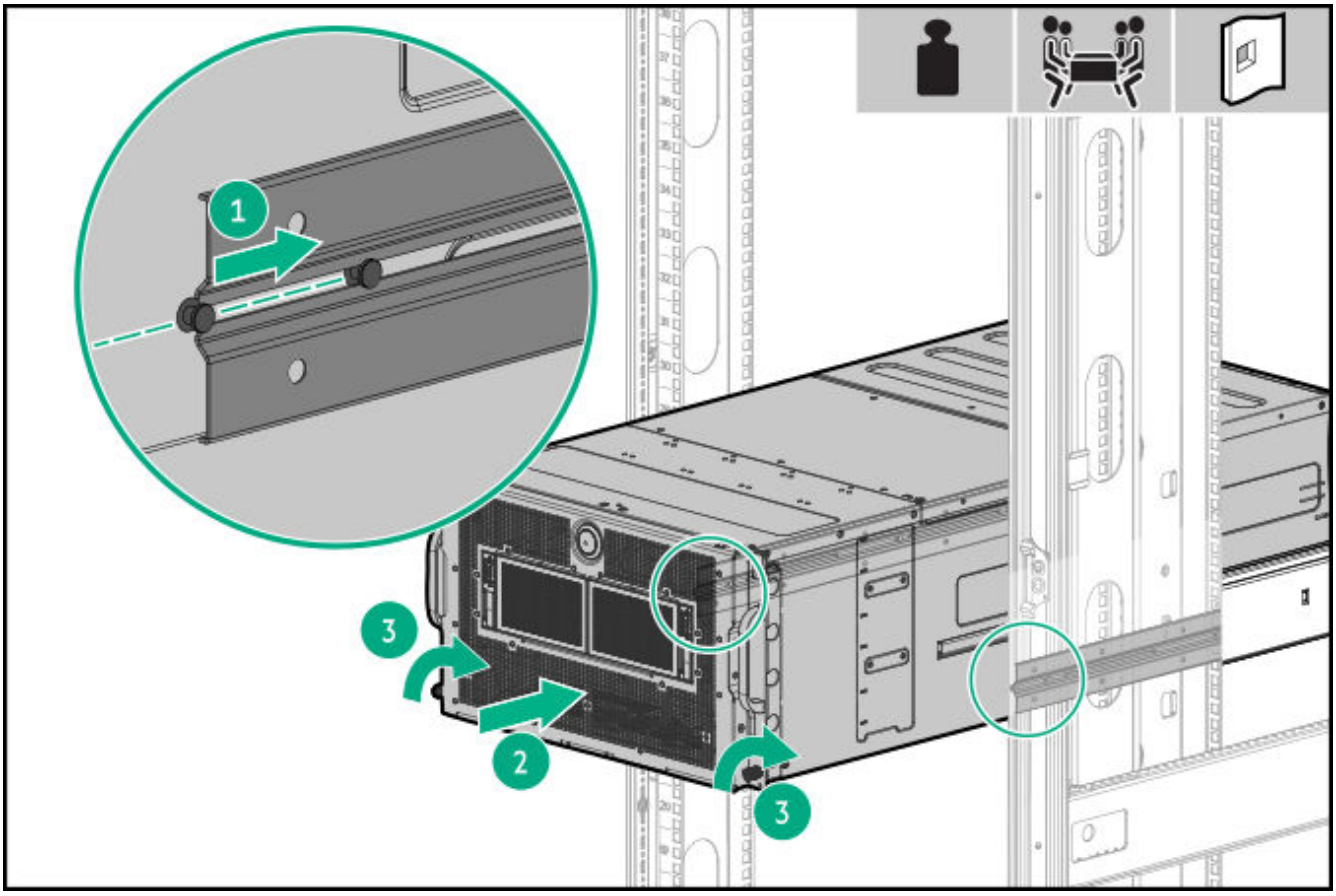

Installing hardware options

Install any hardware options before initializing the server. For options installation information, refer to the option documentation. For server-specific information, refer to "Hardware options installation."

Operating system

This ProLiant server does not ship with provisioning media. Everything required to manage and install the system software and firmware is preloaded on the server.

To operate properly, the server must have a supported operating system. Attempting to run an unsupported operating system can cause serious and unpredictable results. For the latest information on operating system support, see the **Hewlett Packard Enterprise website**.

Failure to observe UEFI requirements for ProLiant Gen10 servers can result in errors installing the operating system, failure to recognize boot media, and other boot failures. For more information on these requirements, see the HPE UEFI Requirements on the **Hewlett Packard Enterprise website**.

To install an operating system on the server, use one of the following methods:

- Intelligent Provisioning—For single-server deployment, updating, and provisioning capabilities. For more information, see Intelligent Provisioning.
- Insight Control server provisioning—For multiserver remote OS deployment, use Insight Control server provisioning for an automated solution. For more information, see the Insight Control documentation on the **Hewlett Packard Enterprise website**.

For additional system software and firmware updates, download the Service Pack for ProLiant from the **Hewlett Packard Enterprise website**. Software and firmware must be updated before using the server for the first time, unless any installed software or components require an older version.

For more information, see Keeping the system current.

For more information on using these installation methods, see the **Hewlett Packard Enterprise website**.

Subtopics

Installing the operating system with Intelligent Provisioning

Installing the operating system with Intelligent Provisioning

Procedure

1. Connect the Ethernet cable between the network connector on the server and a network jack.
2. Press the Power On/Standby button.
3. During server POST, press **F10**.
4. Complete the initial Preferences and Registration portion of Intelligent Provisioning.
5. At the Start screen, click **Configure and Install**.
6. To finish the installation, follow the onscreen prompts. An Internet connection is required to update the firmware and systems software.

POST screen options

About this task

When the server is powered on, the POST screen is displayed. The following options are displayed:

- System Utilities (**F9**)
  Use this option to configure the system BIOS.
- Intelligent Provisioning (**F10**)
  Use this option to deploy an operating system or configure storage.
- Boot menu (**F11**)
  Use this option to make a one-time boot selection.
- Network boot (**F12**)
  Use this option to boot the server from the network.

Registering the server

To experience quicker service and more efficient support, register the product at the **Hewlett Packard Enterprise Product Registration website**.

Hardware options installation

Subtopics

Hewlett Packard Enterprise product QuickSpecs
Hardware option installation guidelines
SUV cable option
Transceiver option
Installing a power supply
Installing a fan module
Drive options
Installing a drive backplane
Memory options
Riser and riser cage options
Storage controller options
GPU options
Installing a processor and heatsink option
OCP NIC 3.0 adapter option
Installing the HPE NS204i-t Gen10 Plus NVMe Boot Controller option
HPE Smart Storage Battery
HPE Trusted Platform Module 2.0 Gen10 Plus option

Hewlett Packard Enterprise product QuickSpecs

To learn more about your product, search the Hewlett Packard Enterprise website (**https://www.hpe.com/info/quickspecs**) for the product QuickSpecs:

- Supported options
- Supported configurations
- Component compatibility
- New features
- Specifications
- Part numbers

Hardware option installation guidelines

WARNING

To reduce the risk of personal injury from hot surfaces, allow the drives and the internal system components to cool before touching them.

CAUTION

To avoid data loss, Hewlett Packard Enterprise recommends that you back up all server data before installing or removing a hardware option, or performing a server maintenance or troubleshooting procedure.

CAUTION

To prevent damage to electrical components, properly ground the server before beginning any installation, removal, or replacement procedure. Improper grounding can cause electrostatic discharge.

- Install any hardware options before initializing the system.
- If multiple options are being installed, read the installation instructions for all the hardware options to identify similar steps and streamline the installation process.
- If the hardware option installation involves internal cabling, review the .

SUV cable option

> **CAUTION**
>
> To avoid equipment damage when removing the SUV cable, press and hold the release buttons on the SUV cable connector before disconnecting the cable from the SUV port.

Use an SUV cable to perform server administration, configuration, and diagnostic procedures by connecting video and USB devices directly to the server.

Subtopics

SUV cable components
Using the SUV cable in a KVM setup
Using the SUV cable to access a USB drive in a KVM setup

SUV cable components

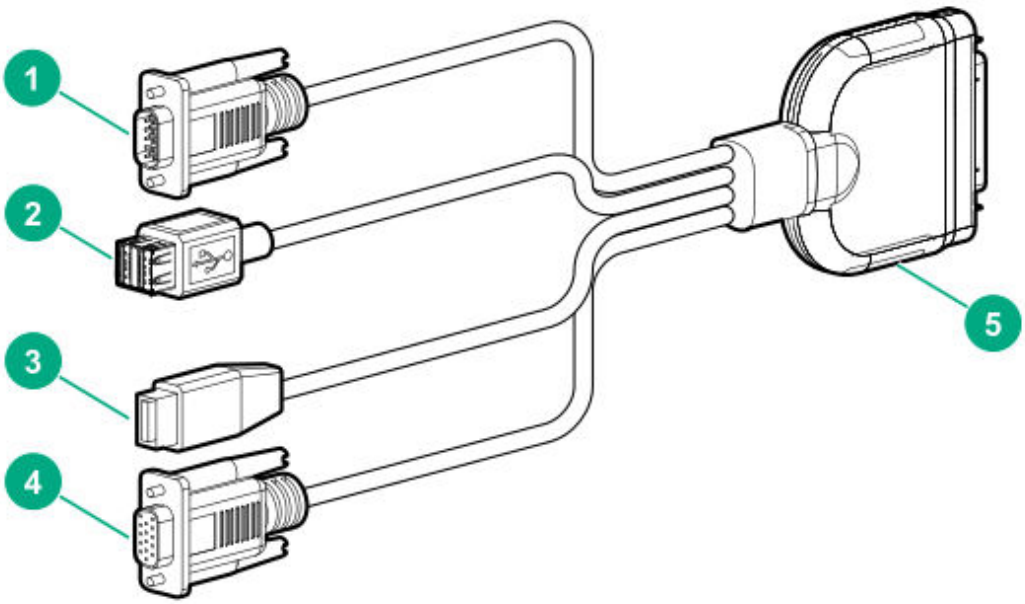

Item	Component	Function
1	Serial port	Connect a null modem serial cable to perform diagnostic procedures. [1]

Item	Component	Function
2	USB 2.0 Type-A ports (2) [2]	Connect USB devices.
3	iLO service port	• Connect a FAT32 formatted USB flash drive [3] to download the Active Health System log. • Connect a client system using a supported USB to Ethernet adapter and access the iLO web interface, remote console, CLI, and iLO RESTful API. For more information, see the iLO user guide on the HPE website (**https://www.hpe.com/support/ilo-docs**).
4	VGA port	Connect an analog display device.
5	SUV connector	Connect to the server SUV port.

[1] For trained personnel only
[2] These ports do not support USB devices that require a power source greater than 500 mA at 5 V.
[3] A USB device connected to the iLO service port is not accessible to the host operating system.

Using the SUV cable in a KVM setup

Procedure

1. Connect the SUV cable to the SUV port.
2. Connect a monitor to the VGA port.
3. Connect a USB mouse to one of the USB ports.
4. Connect a USB keyboard to the other USB port.

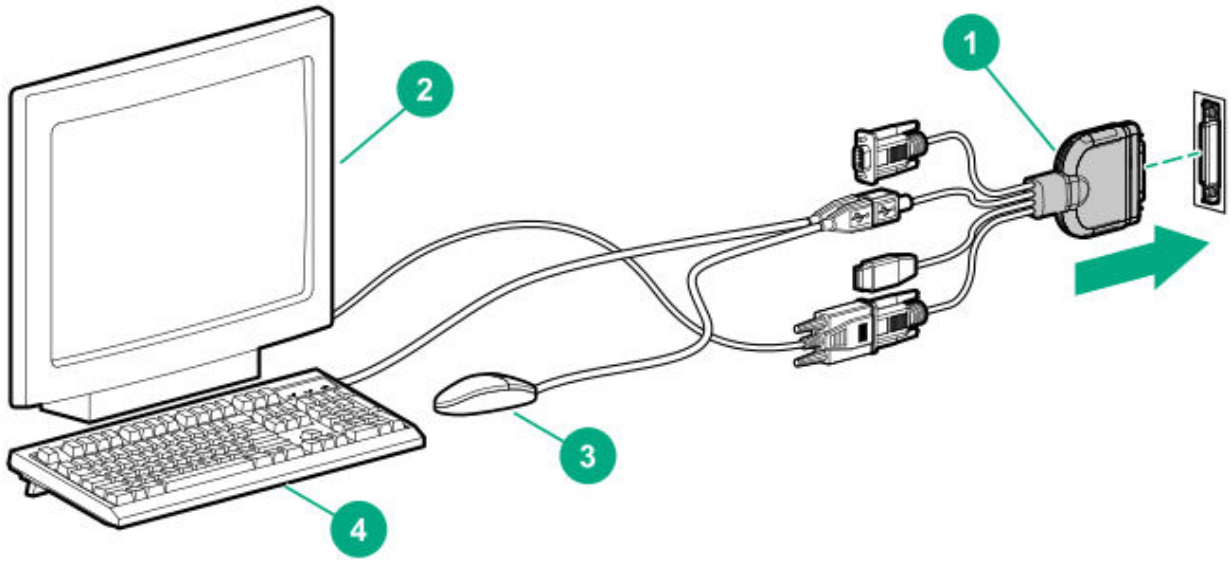

Using the SUV cable to access a USB drive in a KVM setup

About this task

The USB ports on the SUV cable do not support USB devices that require a power source greater than 500 mA at 5 V. When accessing this type of USB drives, such as a USB key or a USB optical drive, use a USB hub in a KVM setup.

Procedure

1. Connect the SUV cable to the SUV port.
2. Connect a monitor to the VGA port.
3. Connect a USB hub to one of the USB ports.
4. Connect a USB mouse to the USB hub.
5. Connect a USB keyboard to the USB hub.
6. Connect a USB key or a USB optical drive to the USB hub.

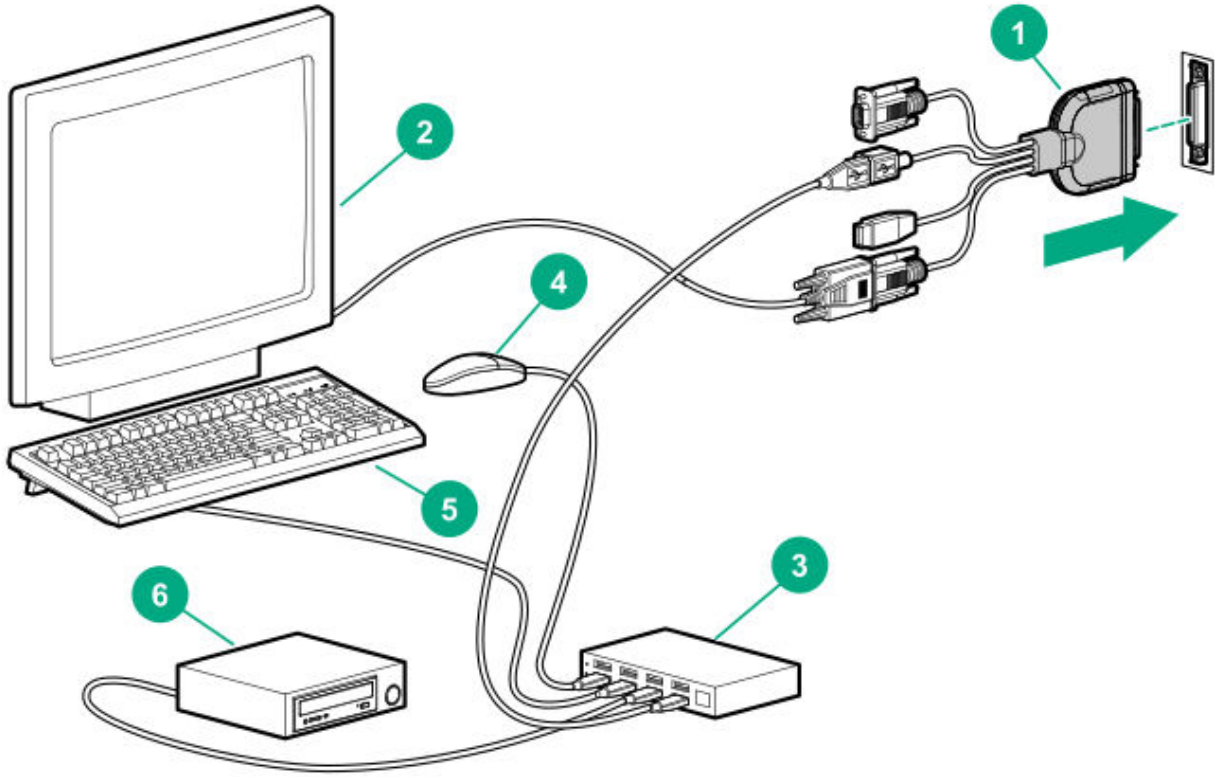

Transceiver option

Subtopics

Transceiver warnings and cautions
Installing a transceiver

Transceiver warnings and cautions

WARNING

Fiber-optic transceivers and fiber-optic cables connected to transceivers emit laser light that can damage your eyes. To avoid eye injuries, avoid direct eye exposure to the beam from the fiber-optic transceiver or into the ends of fiber-optic cables when they are powered-up.

CAUTION

The presence of dust in transceiver ports can cause poor cable connectivity. To prevent dust from entering, install a dust plug in an unused transceiver port.

CAUTION

Supported transceivers can be hot-swapped—removed and installed while the server is powered-on. However, to prevent potential damage to the transceiver or the fiber-optic cable, disconnect the cable from the transceiver before hot-swapping it.

CAUTION

Do not remove and install transceivers more often than is necessary. Doing so can shorten the useful life of the transceiver.

IMPORTANT

When you replace a transceiver with another of a different type, the server might retain selected port-specific configuration settings that were configured for the replaced transceiver. Be sure to validate or reconfigure port settings as required.

Installing a transceiver

Prerequisites

Before installing a transceiver option:

- Make sure that a compatible network adapter is installed in the node. Determine if installing the transceiver in the network adapter requires a specific system operating temperature. For more information, see the HPE website (**https://www.hpe.com/support/xl645dgen10plus-thermal**).
- Review the following:

- Transceiver warnings and cautions
- Transceiver documentation for specific operational and cabling requirements

Procedure

1. Hold the transceiver by its sides and gently insert it into the network adapter port until it clicks into place.

   Transceivers are keyed so that they can only be inserted in the correct orientation. If the transceiver does not fit easily into the port, you might have positioned it incorrectly. Reverse the orientation of the transceiver and insert it again.

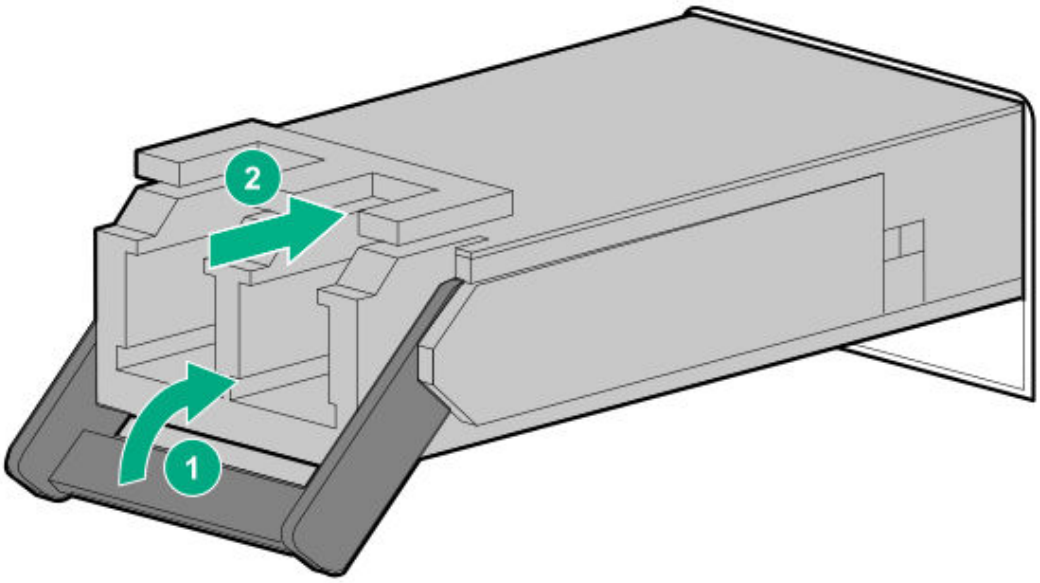

2. Remove the dust plug or protective cover from the transceiver.
3. Connect a compatible LAN segment cable to the transceiver.
4. Make sure that the NIC link LED on the port is solid green.

   For more information on the port LED behavior, see the documentation that ships with the transceiver.

5. If needed, see the transceiver documentation for the model-specific fastening mechanism applicable to the transceiver.

Results

The installation is complete.

Installing a power supply

Prerequisites

Before installing this option, be sure that you have the components included with the hardware option kit.

About this task

The PCIe GPU configuration requires four 12 V power supplies. The SXM GPU configuration requires four 54 V power supplies and two 12 V power supplies.

Procedure

1. Remove the power supply blank.

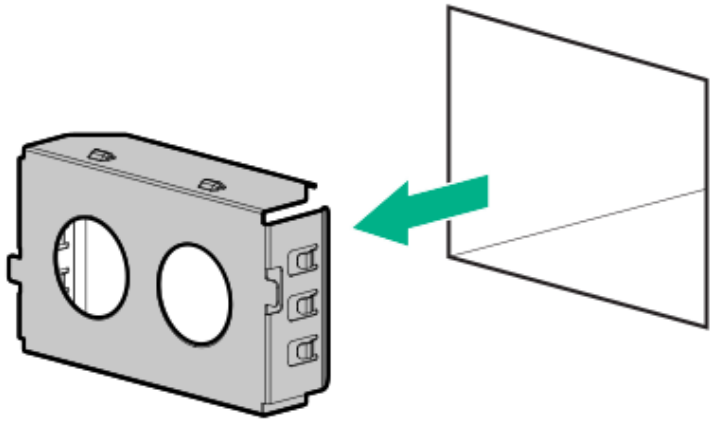

2. Install the power supply.

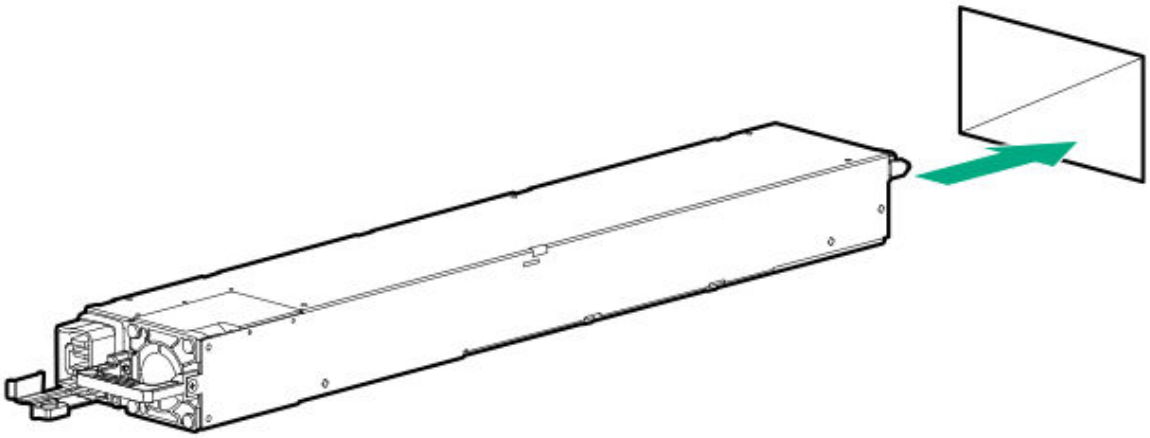

3. Connect the power cord to the power supply.

4. Power up the server.

Installing a fan module

Prerequisites

Before installing this option, be sure that you have the components included with the hardware option kit.

About this task

WARNING

To reduce the risk of personal injury from hot surfaces, allow the drives and the internal system components to cool before touching them.

The system supports 15 fan modules. If the system has one fan lesser than 15 during boot, the system will boot in the Nonredundant Mode. If the missing fan is installed, the system will begin functioning in Redundant Mode. If any fans are missing during power up, the system will be allowed to boot, but will be using an unsupported configuration.

CAUTION

For proper cooling, do not exceed two minutes with the chassis front door open. Exceeding two minutes can lead to thermal damage or system shutdown.

If installing a hot-plug fan without powering down the system, the chassis front door must be closed within two numutes.

For fan module numbering, see Fan module numbering.

Procedure

1. .
2. Open the chassis front door.
3. Install the fan module.

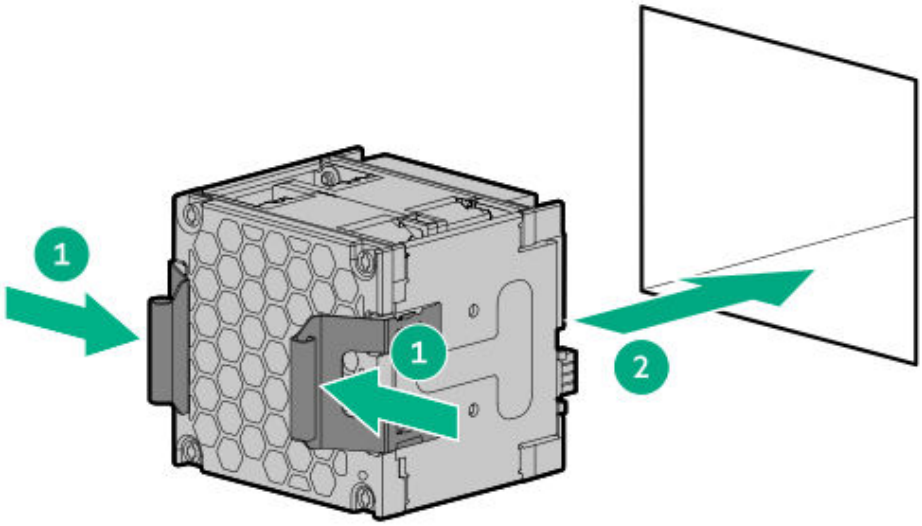

4. Close the chassis front door.
5. Power up the server.

More information

Open the chassis front door
Close the chassis front door

Drive options

Subtopics

Supported configurations
Installing a hot-plug drive

Supported configurations

The secondary riser has two x8 Slimline connectors for installing either two processor direct NVMe drives, or one processor direct NVMe drive and one SATA drive.

8 SFF Gen10 SAS/SATA backplane configurations

Drives	Controllers
8 + 8 embedded SATA SSDs [1]	Embedded SATA
8 + 8 SAS/SATA SSDs [1]	E208i-p or P408i-p

[1] Supports two M.2 SSD modules per system board module

For cabling information, see Gen10 Plus 8 SFF SAS/SATA Standard backplane cabling.

Table 1. SAS/SATA-NVMe drive configurations

Configuration	Controllers
2 embedded SATA SSDs + 2 x4NVMe SSDs	Embedded SATA
2 embedded SATA SSDs + 6 x4NVMe SSDs with adapter card	Embedded SATA
2 SAS/SATA SSDs + 2 x4NVMe SSDs [1]	E208i-p or P408i-p

[1] Supports two M.2 SSD modules per system board module

For cabling information, see SAS/SATA-NVMe configuration cabling.

M.2 configurations

The system supports two M.2 SSD modules per system board module. Installing M.2 SSD modules requires that you install the HPE NS204i-t Gen10 Plus NVMe Boot Controller on the system board and cable it using the HPE XL645d Gen10 Plus M.2 Cable Kit. For installation procedure of the M.2 SSD module, see Installing the HPE NS204i-t Gen10 Plus NVMe Boot Controller option. For M.2 cabling, see HPE NS204i-t Gen10 Plus NVMe Boot Controller -M.2 SSD module cabling.

Backplane	Compatible configuration per system board module
Gen10 SAS/SATA	2 SAS/SATA drives with E208i-p or P408i-p controller + 2 x4NVMe drives
Gen10 SAS/SATA	8 embedded SATA controllers
U.3 Premium	8 SAS/SATA drives with E208i-p or P408i-p controller

Installing a hot-plug drive

Prerequisites

Before installing this option, be sure that you have the components included with the hardware option kit.

About this task

The server supports SFF SAS, SATA, and NVMe drives.

Procedure

1. Remove the drive blank.

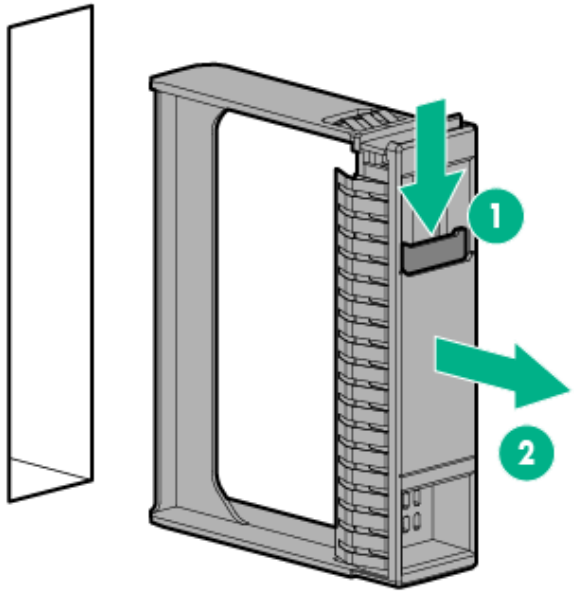

2. Prepare the drive.

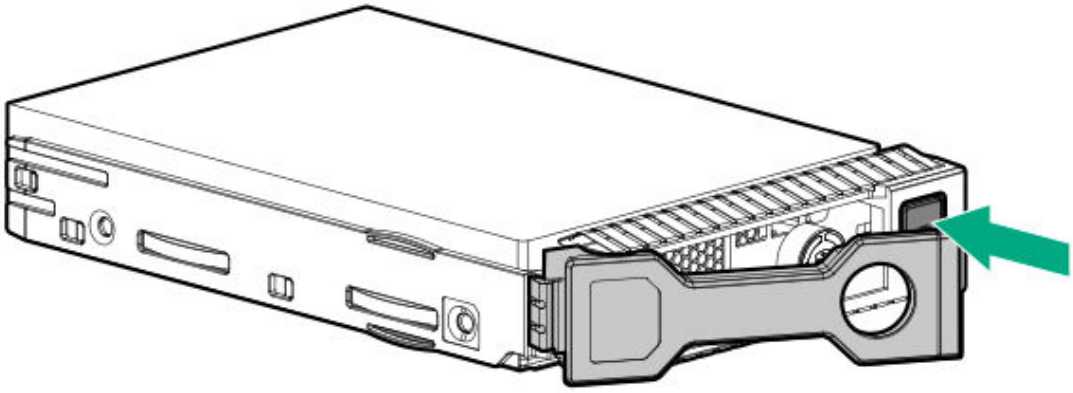

3. Install the drive.

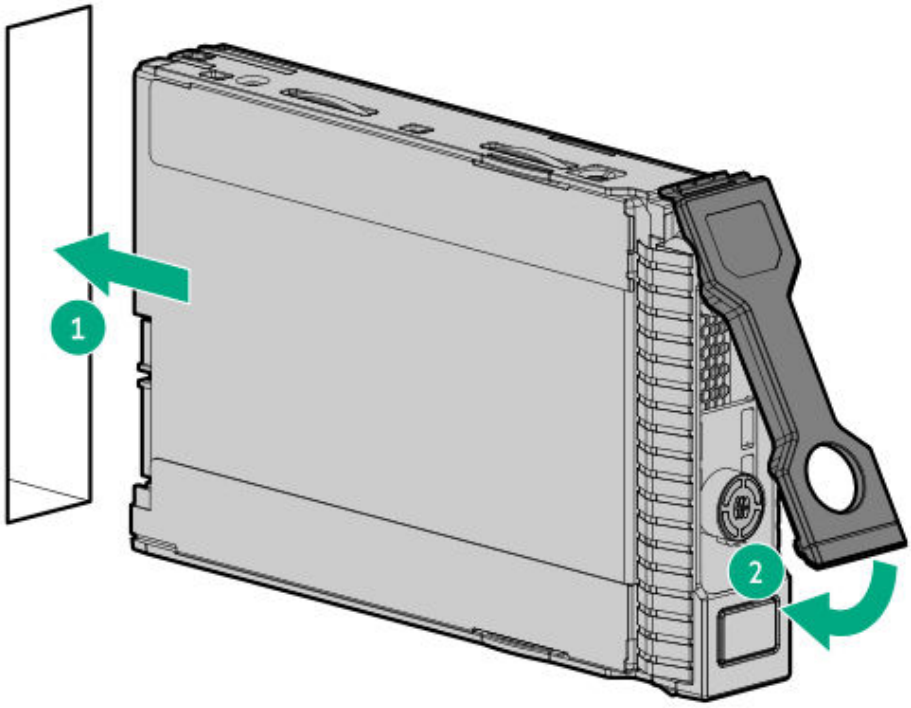

4. Determine the status of the drive from the drive LED definitions (HPE Smart Drive).

Installing a drive backplane

Prerequisites

Before installing this option, be sure that you have the following:

- The components included with the hardware option kit
- T-15 Torx screwdriver

About this task

The server supports the following backplanes:

- HPE Gen10 8 SFF SAS/SATA backplane

- U.3 Premium 8 SFF backplane

For information on supported drive-backplane configurations, see Supported configurations.

Procedure

1. Observe the following alerts:

   WARNING

   To reduce the risk of personal injury from hot surfaces, allow the drives and the internal system components to cool before touching them.

   CAUTION

   To prevent damage to electrical components, properly ground the server before beginning any installation procedure. Improper grounding can cause electrostatic discharge.

2. Disconnect all peripheral cables from the server.
3. Support the drive cage from the door end to keep the drive cage from sliding off.
4. Open the chassis front door.
5. Install the backplane and tighten the two screws using a T-15 Torx screwdriver.

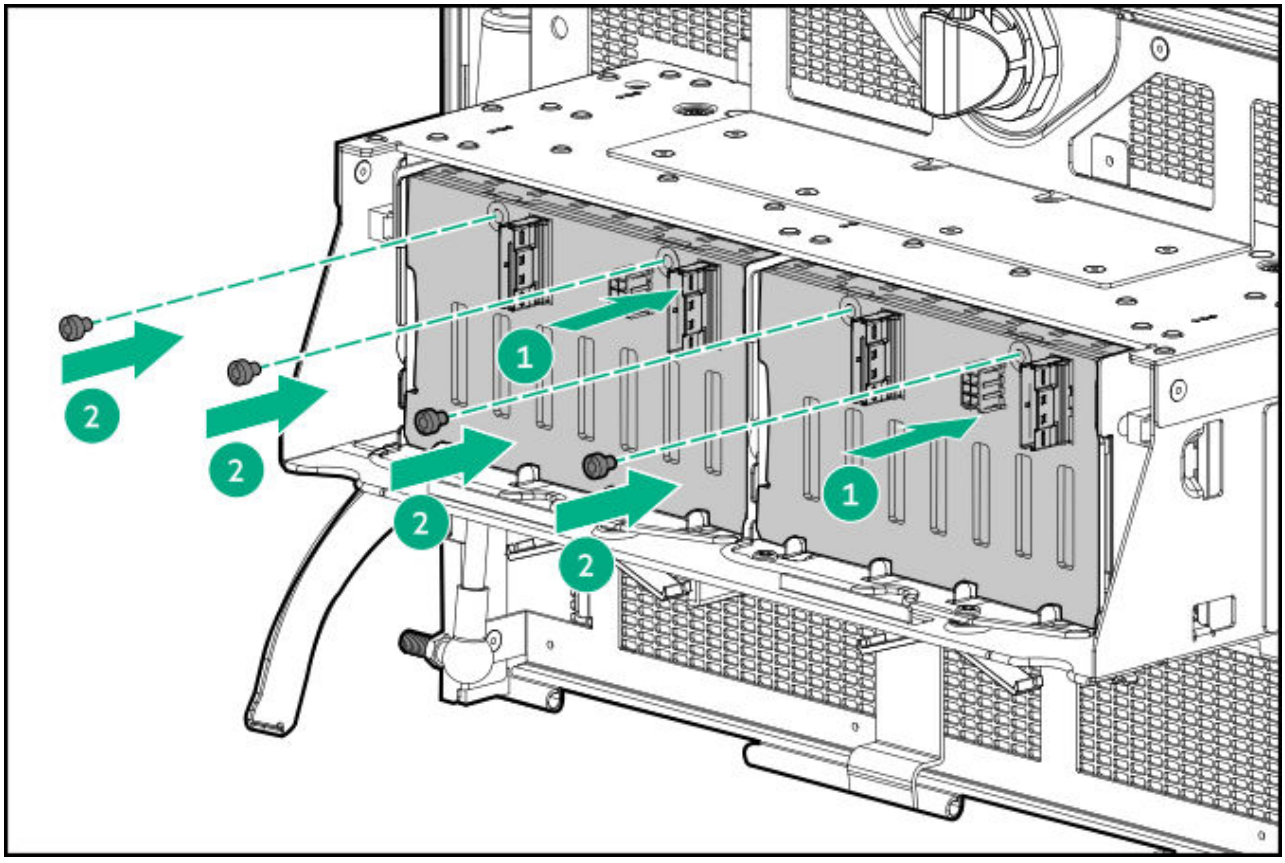

6. Connect the drive data and power cables from the front panel pass-thru board to the backplane.

   For cabling information, see Drive-controller-backplane configuration cabling.

7. Close the chassis front door.
8. Connect all peripheral cables to the server.
9. Power up the server.

Results

The installation is complete.

More information

Open the chassis front door
Close the chassis front door

Memory options

IMPORTANT

This server does not support mixing LRDIMMs and RDIMMs. Attempting to mix any combination of these DIMMs can cause the server to halt during BIOS initialization. All memory installed in the server must be of the same type.

Subtopics

DIMM population information
DIMM-processor compatibility
HPE SmartMemory speed information
Installing a DIMM

DIMM population information

For specific DIMM population information, see the DIMM population guidelines on the Hewlett Packard Enterprise website (**https://www.hpe.com/docs/amd-population-rules-Gen10Plus**).

DIMM-processor compatibility

The installed processor determines the type of DIMM that is supported in the server:

AMD EPYC processors support DDR4-3200 DIMMS.

Mixing DIMM types is not supported. Install only the supported DDR4-3200 DIMMs in the server.

HPE SmartMemory speed information

For more information about memory speed information in HPE servers using AMD EPYC processors, see the Hewlett Packard Enterprise website ( ).

Installing a DIMM

Prerequisites

Before installing this option, be sure that you have the following:

The components included with the hardware option kit

Procedure

1. Observe the following alerts:

   WARNING

   To reduce the risk of personal injury from hot surfaces, allow the drives and the internal system components to cool before touching them.

   CAUTION

   To prevent damage to electrical components, properly ground the server before beginning any installation procedure. Improper grounding can cause electrostatic discharge.

2. .
3. Disconnect all peripheral cables from the server.
4. Remove the system board module from the chassis.
5. Place the system board module on a flat, level work surface.
6. Remove the system board module access panel.
7. Remove the air baffle.
8. Install the DIMM:
   a. Open the DIMM slot latches.
   b. Align the notch on the bottom edge of the DIMM with the keyed surface of the DIMM slot, and then fully press the DIMM into the slot until the latches snap back into place.

      The DIMM slots are structured to ensure proper installation. If you try to insert a DIMM but it does not fit easily into the slot, you might have positioned it incorrectly. Reverse the orientation of the DIMM and insert it again.

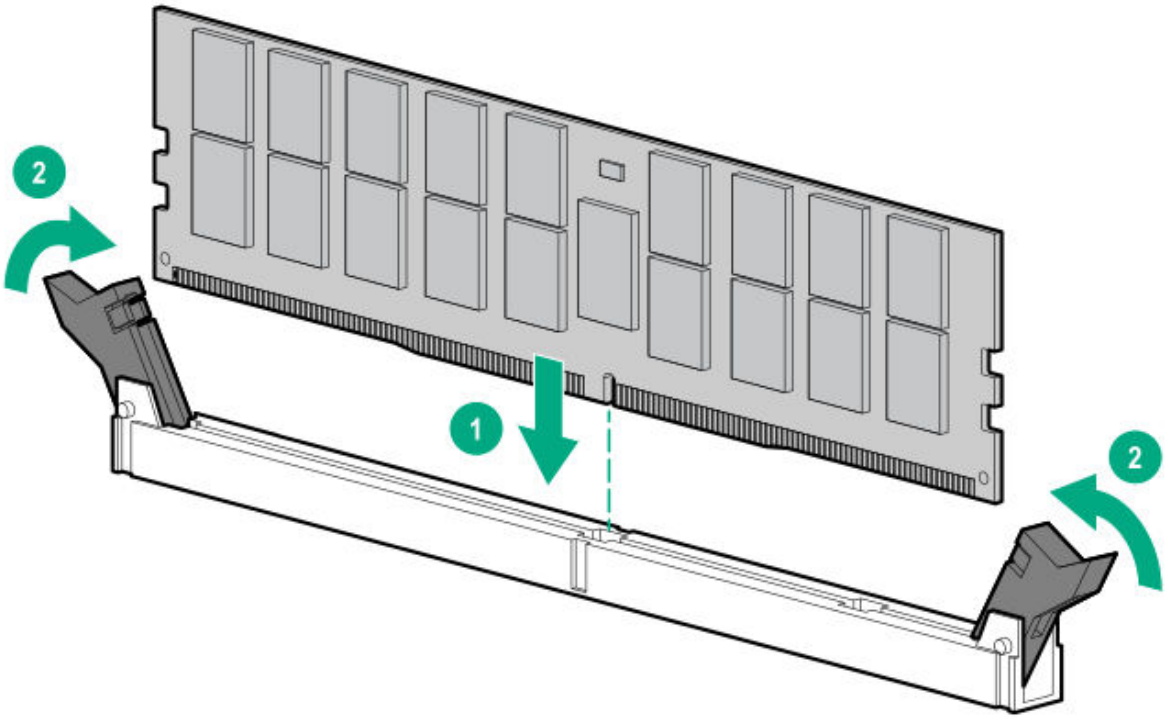

9. Install the air baffle.
10. Install the system board module access panel.
11. Install the system board module into the chassis.
12. Connect all peripheral cables to the server.
13. Power up the server.

More information

Remove the system board module from the chassis
Remove the system board module access panel
Install the system board module into the chassis
Install the system board module access panel
Remove the air baffle
Install the air baffle

Riser and riser cage options

Subtopics

Supported PCIe form factors
Installing a PCIe riser

Supported PCIe form factors

A system board module has two x16 PCIe risers that support one low-profile PCIe card each.

Slot description example

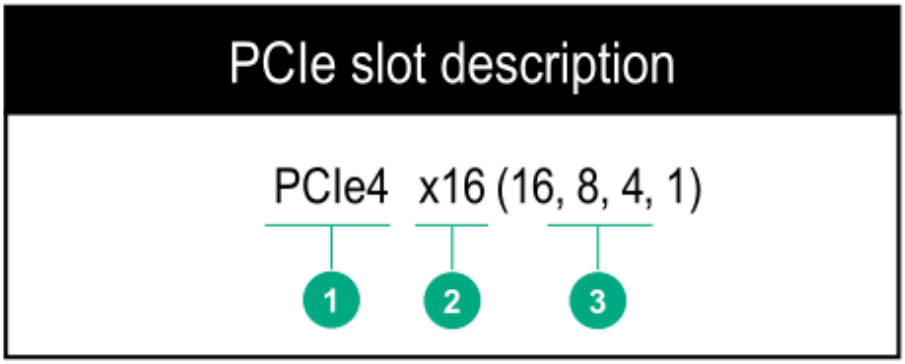

Item	Description
1	Gen4 signaling rate
2	Physical connector link width
3	Negotiable link widths

PCIe slot specifications on a node

PCIe slot	Card length	Physical connector link width
Slot 9 (primary PCIe riser)	Half height, half length (low profile)	PCIe4 x16 (8, 4, 2, 1)
Slot 10 (secondary PCIe riser)	Half height, half length (low profile))	PCIe4 x16 (8, 4, 2, 1)

Installing a PCIe riser

Prerequisites

Before you perform this procedure, make sure that you have the following items available:

- The components included with the hardware option kit
- T-10 Torx screwdriver

Procedure

1. .
2. Disconnect all peripheral cables from the server.
3. Remove the system board module from the chassis.
4. Place the system board module on a flat, level work surface.
5. Remove the system board module access panel.
6. Remove the midplane interposer, if installing the secondary or tertiary riser.
7. Install the riser:
    - Primary riser

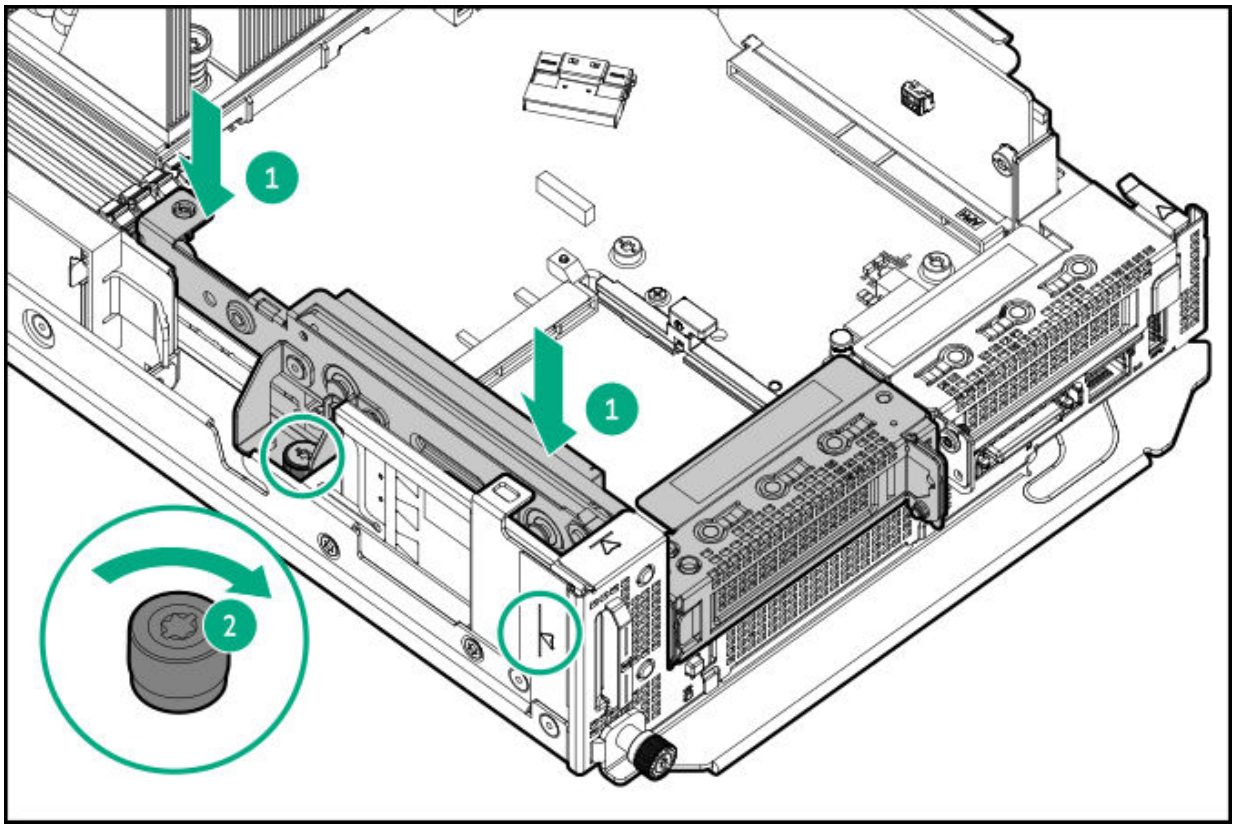

- Secondary riser

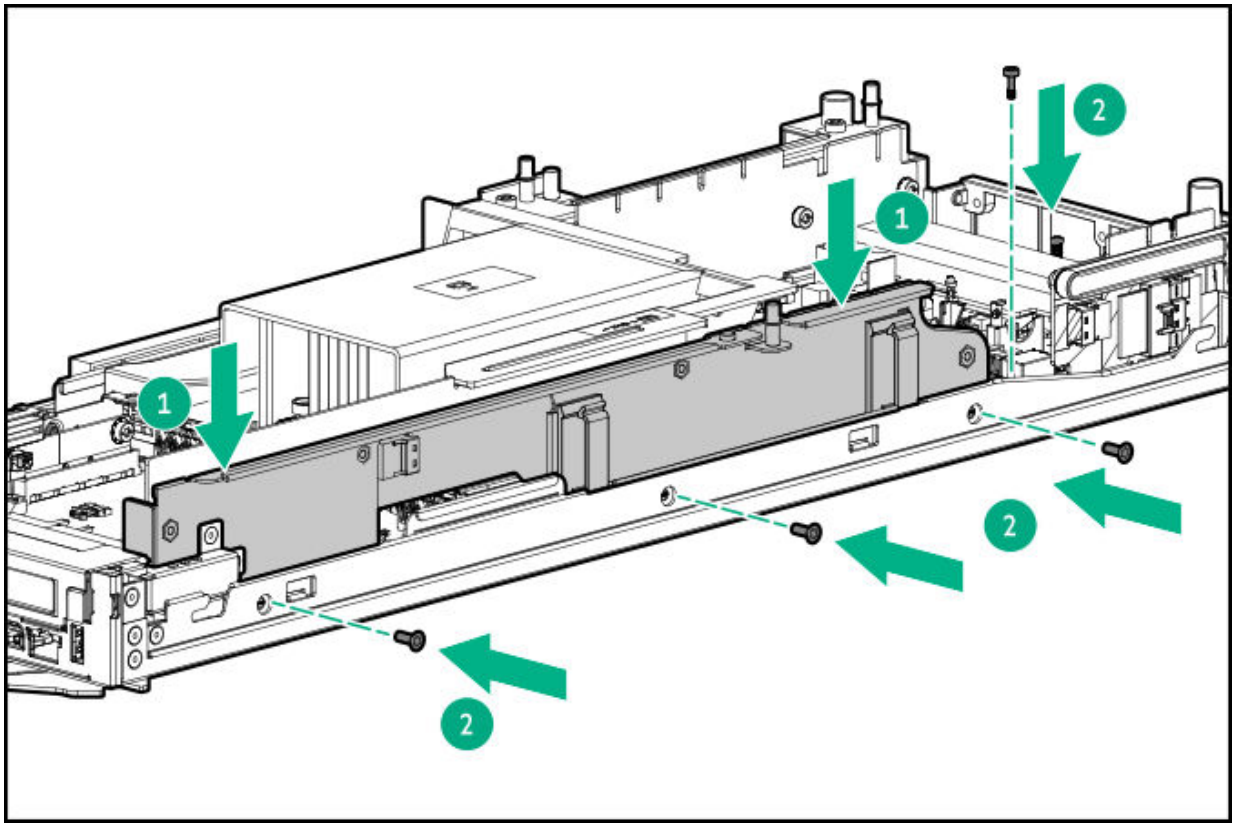

- Tertiary riser

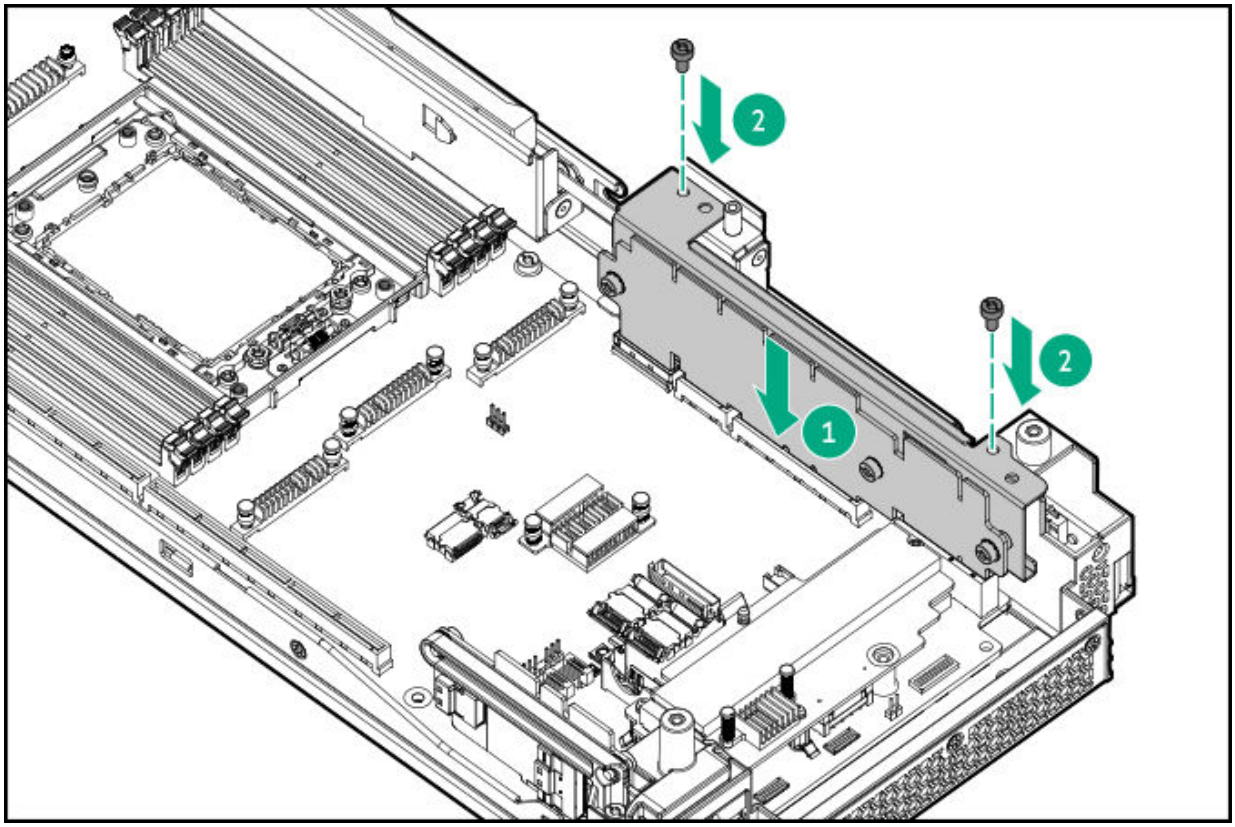

8. Install the midplane interposer, if removed.
9. Install the system board module access panel.
10. Install the system board module into the chassis.
11. Connect all peripheral cables to the server.
12. Power up the server.

Results

The installation is complete.

More information

Remove the system board module from the chassis
Remove the system board module access panel
Remove the midplane interposer
Install the midplane interposer
Install the system board module into the chassis
Install the system board module access panel

Storage controller options

The server supports the following storage controllers:

- Embedded controllers
  Enabled through UEFI System Utilities and configured using either System Utilities or the HPE Smart Storage Administrator (Intelligent Provisioning).
- Type-p controllers
  Type-p controllers install in a PCIe expansion slot.

For a complete list of supported storage controller models, see the server QuickSpecs on the Hewlett Packard Enterprise website (**https://www.hpe.com/info/qs**).

Subtopics

Installing an expansion board or a type -p storage controller

Installing an expansion board or a type -p storage controller

Prerequisites

Before installing this option, be sure that you have the following:

- The components included with the hardware option kit
- T-15 Torx screwdriver

Procedure

1. Observe the following alerts:

   WARNING

   To reduce the risk of personal injury from hot surfaces, allow the drives and the internal system components to cool before touching them.

   CAUTION

   To prevent damage to electrical components, properly ground the server before beginning any installation procedure. Improper grounding can cause electrostatic discharge.

2. Back up all server data.

3. .
4. Disconnect all peripheral cables from the server.
5. Remove the system board module from the chassis.
6. Place the system board module on a flat, level work surface.
7. Remove the system board module access panel.
8. Remove the midplane interposer from the system board module.
9. Remove the PCIe riser from the system board.
10. Remove the PCIe slot cover.

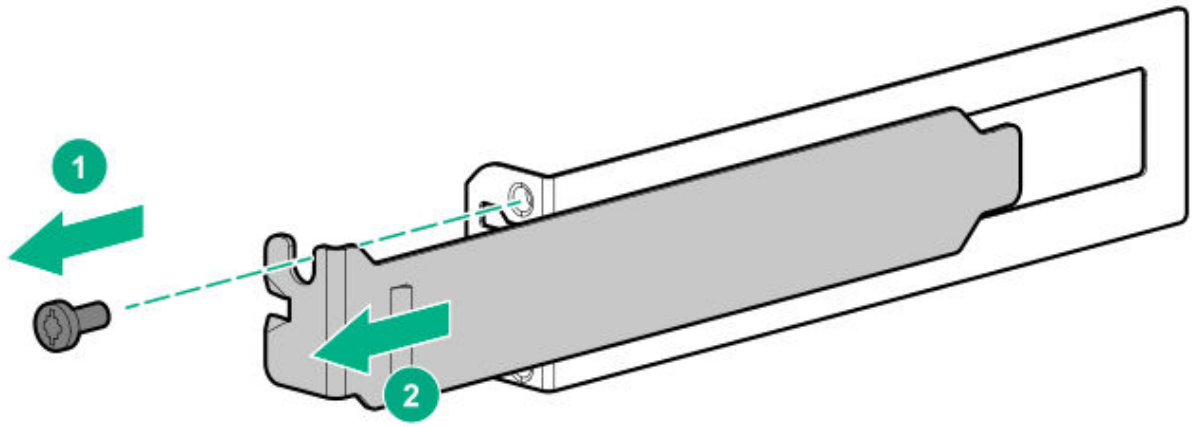

11. Install the expansion board or storage controller into the PCIe slot.

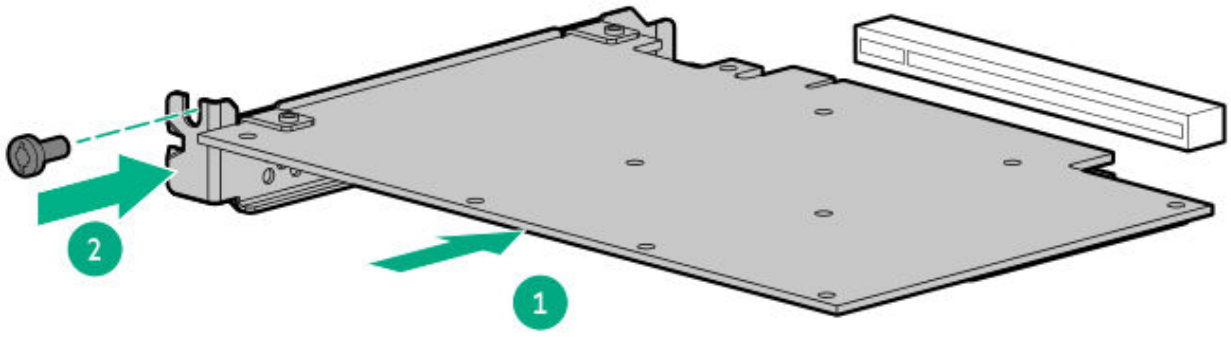

12. If internal cables are required for the expansion board or storage controller, connect the cables.

3. Install the PCIe riser into the system board.
4. Install the midplane interposer on the system board module.
5. Install the system board module access panel.
6. Install the system board module into the chassis.
7. Connect all peripheral cables to the server.
8. Power up the server.
9. Configure the new storage controller.

   For more information, see the user guide for your controller series on the Hewlett Packard Enterprise website (**http://www.hpe.com/info/smartstorage-docs**).

Results

The installation is complete.

More information

Remove the system board module from the chassis
Remove the system board module access panel
Remove the midplane interposer
Installing a PCIe riser
Remove a PCIe riser
Install the midplane interposer
Install the system board module access panel
Install the system board module into the chassis

GPU options

The server supports a maximum of 4 SXM4 GPUs in the SXM GPU tray option, or 4 double-width PCIe GPUs or 8 single-width PCIe GPUs in the PCIe GPU tray option per system board module. The GPU slots are mapped in 1:1 GPU to PCIe riser board ratio.

Subtopics

Installing a GPU tray
SXM4 GPU options
PCIe GPU options
Installing a GPU bridge

Installing a GPU tray

Prerequisites

Before installing this option, be sure that you have the following:

- The components included with the hardware option kit
- Four 12 V power supplies installed in the chassis, if installing a PCIe GPU tray
- Four 54 V power supplies and two 12 V power supplies installed in the chassis, if installing an SXM4 GPU tray

Procedure

1. .
2. Disconnect all peripheral cables from the server.
3. Install the GPU tray into the chassis.

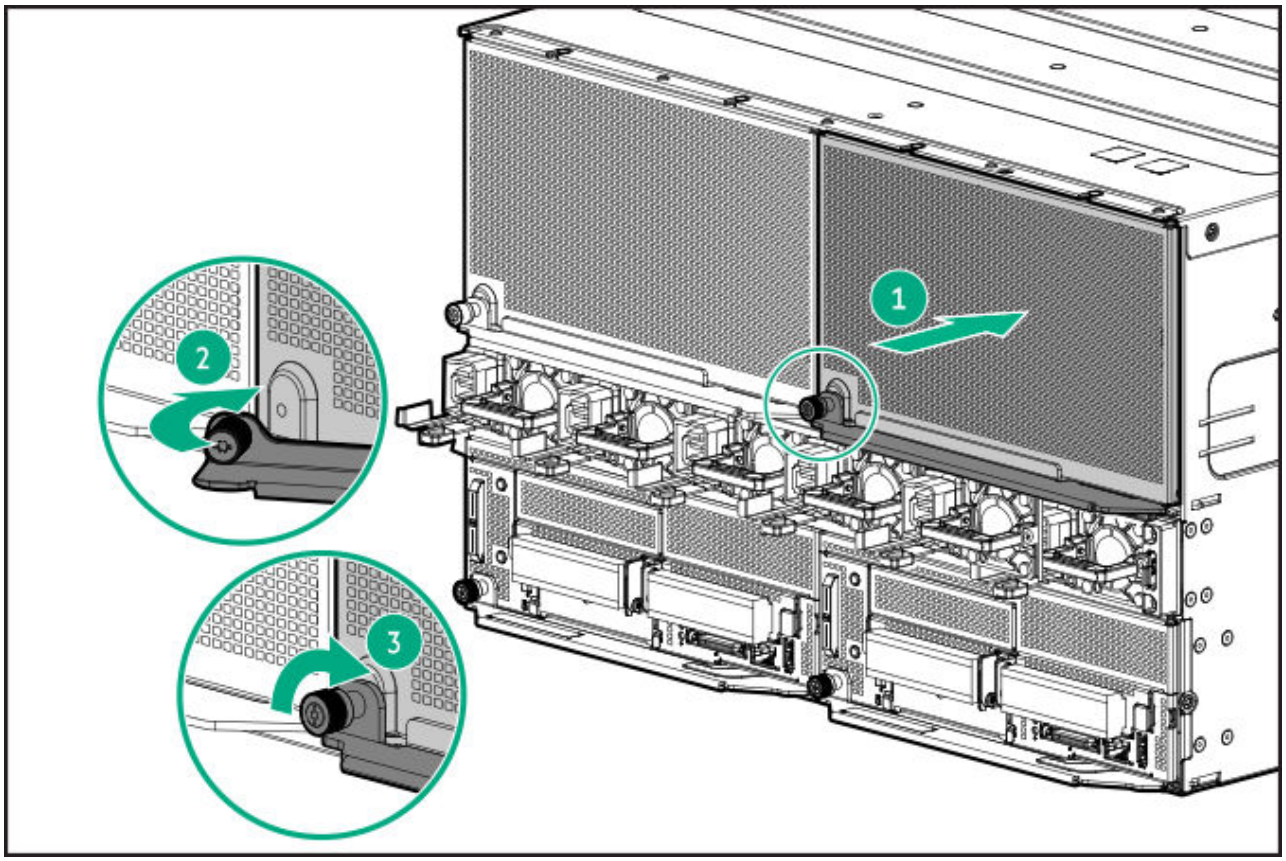

Depending on the chassis configuration, your GPU tray might look different.

The image shows installing a right GPU tray. The steps for removing the left GPU tray and the right GPU tray are the same.

4. Connect all peripheral cables to the server.
5. Power up the server.

Results

The installation is complete.

SXM4 GPU options

The SXM4 GPU tray has four x16 PCIe 4.0 slots.

The SXM4 GPU tray needs four 12 V power supplies and two 54 V power supplies to work.

Each PCIe slot on this SXM4 GPU PCA is capable of supporting up to 500 W per GPU.

Subtopics

Installing an SXM4 GPU

Installing an SXM4 GPU

About this task

The SXM4 GPUs come pre-installed in the SXM4 GPU tray. Customer installation of the SXM4 GPU is not supported.

PCIe GPU options

The PCIe GPU tray has four x16 PCIe 4.0 slots. Each double-wide PCIe slot is capable of supporting up to 300 W per GPU.

The PCIe GPU tray has eight single-wide x16 PCIe 4.0 slots. Each single-wide PCIe slot is capable of supporting up to 150 W per GPU.

The brown GPU slots support single-width and double-width PCIe GPUs while the gray slots support only single-width GPUs.

The PCIe GPU tray needs four 12 V power supplies to work.

Mixing of GPUs is not allowed.

Subtopics

Installing a PCIe GPU

Installing a PCIe GPU

Prerequisites

Before installing this option, be sure that you have the following:

- The components included with the hardware option kit
- T-10 Torx screwdriver
- T-10 screws

Procedure

1. Observe the following alerts:

   WARNING

   To reduce the risk of personal injury from hot surfaces, allow the drives and the internal system components to cool before touching them.

   CAUTION

   To prevent damage to electrical components, properly ground the server before beginning any installation procedure. Improper grounding can cause electrostatic discharge.

2. .
3. Disconnect all peripheral cables from the server.
4. Remove the GPU tray from the chassis.
5. Place the GPU tray on a flat, level work surface.
6. Using the T-10 screws, install the bracket included in the GPU option kit with the T-10 Torx screwdriver. The location of the bracket and the number of screws used will vary depending on GPU model.
   - Double-wide GPU

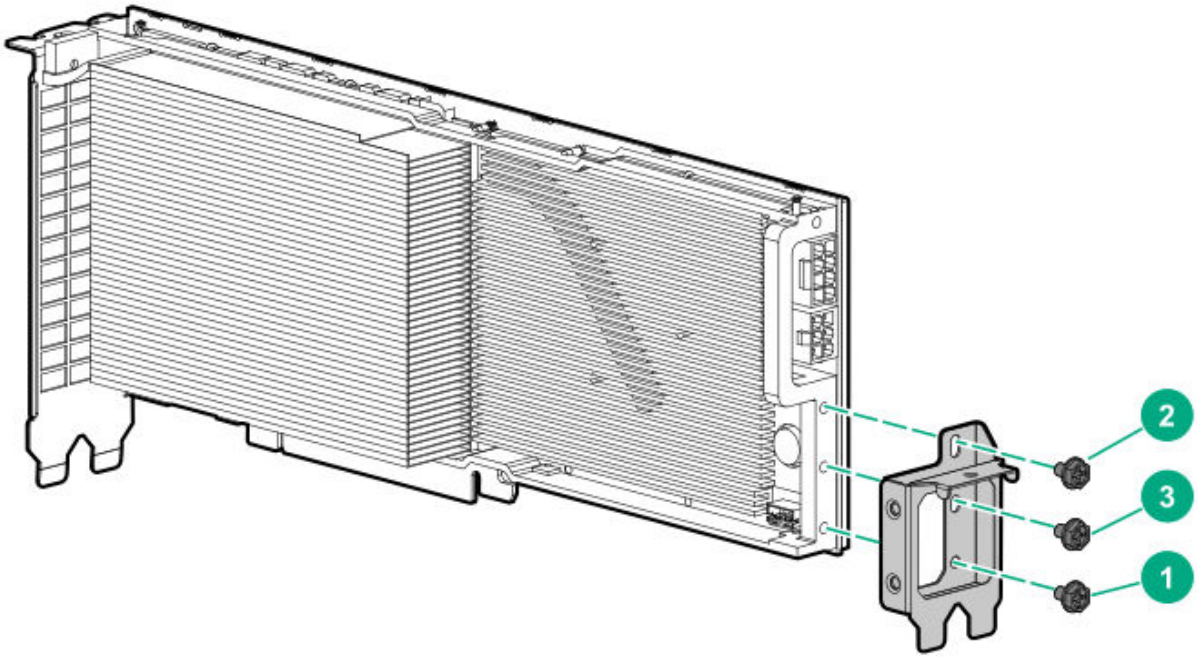

- Single-wide GPU

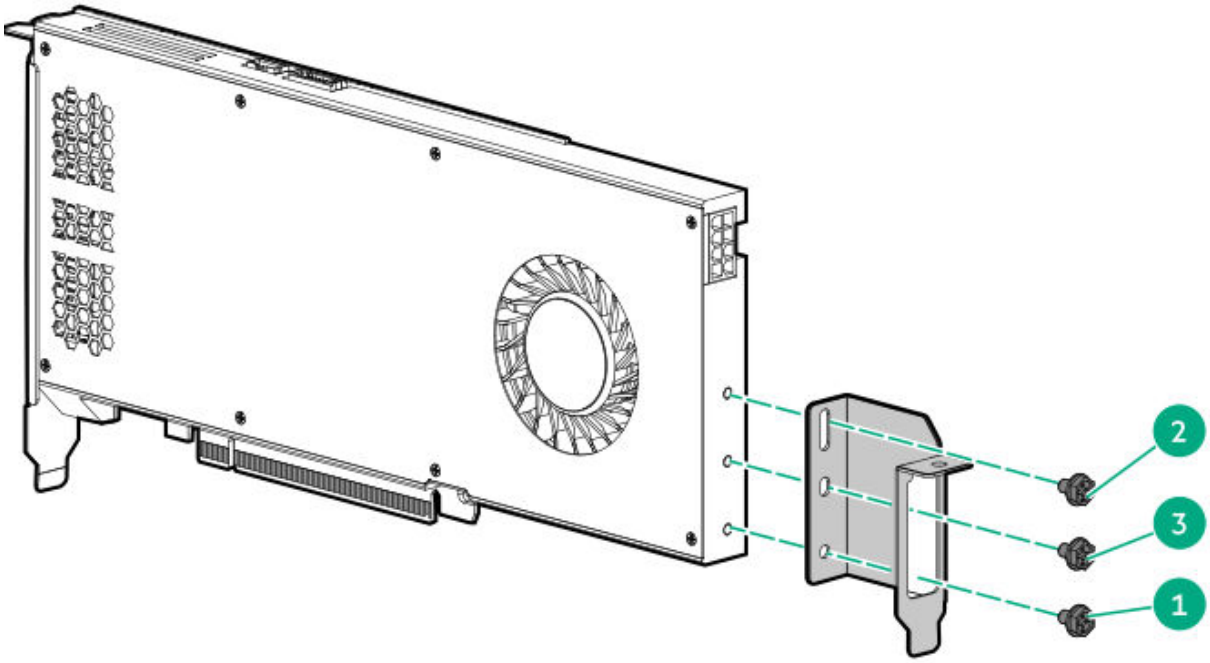

7. Remove the blank from a GPU slot.

Remove a single slot blank to install a single-wide GPU and two slot blanks to install a double-wide GPU.

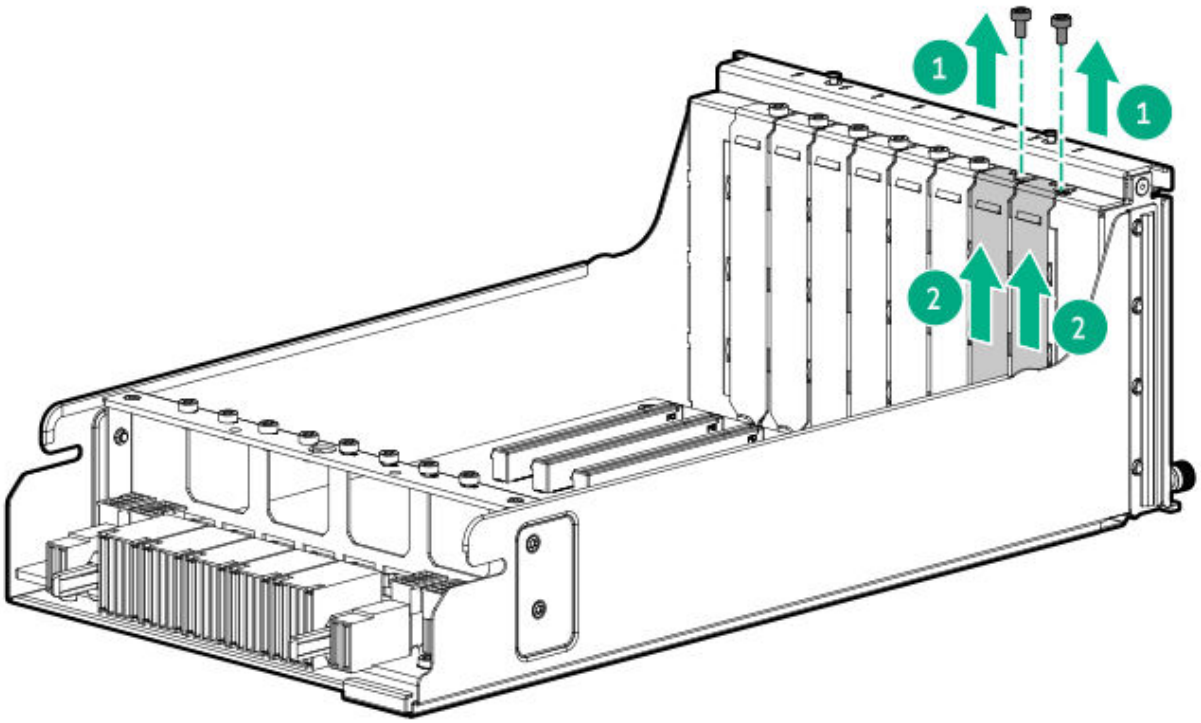

8. Align and install the GPU using the T-10 Torx screwdriver.

   A double-wide GPU is shown. The installation for a single-wide GPU is the same.

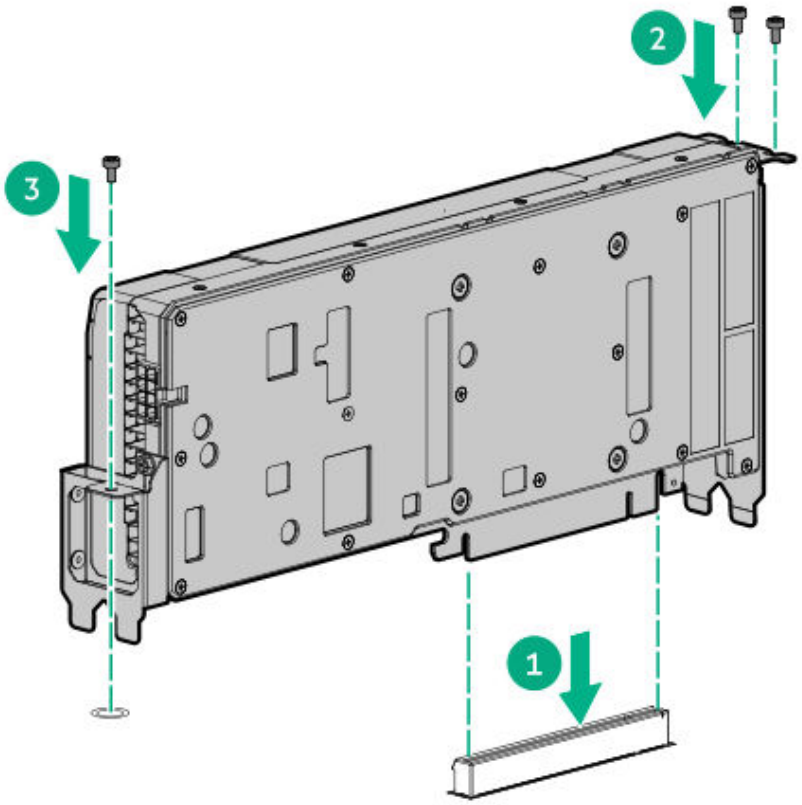

9. Connect the power cable from the GPU to the GPU module.

   For cabling information, see GPU power cabling.

.0. Power up the server.

More information

Remove the GPU tray from the chassis

Installing a GPU bridge

Prerequisites

Before installing this option, be sure that you have the following:

- The components included with the hardware option kit
- T-10 Torx screwdriver

About this task

You can install GPU bridges for a double-width AMD MI100 GPU configuration. A GPU bridge is a high-bandwidth channel for GPU-to-GPU communication. A bridge allows GPUs to communicate with each other without using precious bandwidth on the PCIe slots. Using a bridge scales both memory and capacity of the GPU, enabling it to perform to its full capacity.

A bridge can connect 4 GPUs. If you have installed an 8 GPU configuration, you will need 2 bridge cards. One bridge card will connect 4 GPUs while the second card will connect 4 more GPUs to connect a total of 8 GPUs.

Procedure

1. Observe the following alerts:

   WARNING

   To reduce the risk of personal injury from hot surfaces, allow the drives and the internal system components to cool before touching them.

   CAUTION

   To prevent damage to electrical components, properly ground the server before beginning any installation procedure. Improper grounding can cause electrostatic discharge.

2. Power down the server.
3. Disconnect all peripheral cables from the server.
4. Remove the GPU tray from the chassis.
5. Place the GPU tray on a flat, level work surface.
6. With a T-10 Torx screwdriver, install the GPU bridge on the GPUs using the 12 screws supplied with the kit.

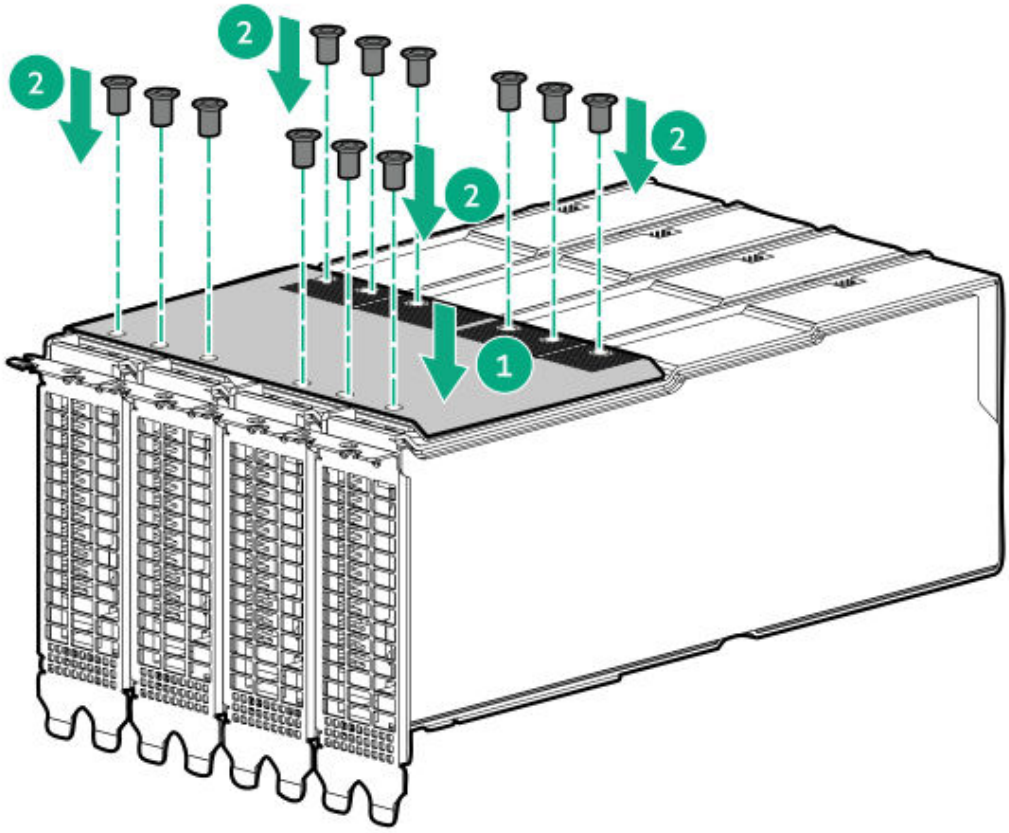

7. Connect all peripheral cables to the server.
8. Install the GPU tray.
9. Power up the server.

More information

Remove the GPU tray from the chassis
Installing a GPU tray

Installing a processor and heatsink option

Prerequisites

Before you perform this procedure, make sure that you have the following items available:

- The components included with the hardware option kit
- T-20 Torx screwdriver
- 1.0 gm (0.5 ml) or two 0.5 gm (0.25 ml) of thermal grease in syringes

- Alcohol wipe

About this task

Hewlett Packard Enterprise recommends identifying the processor and socket components before performing this procedure.

Procedure

1. Observe the following alerts:

WARNING

To reduce the risk of personal injury from hot surfaces, allow the drives and the internal system components to cool before touching them.

CAUTION

To prevent damage to electrical components, properly ground the server before beginning any installation procedure. Improper grounding can cause electrostatic discharge.

CAUTION

When handling the heatsink, always hold it along the top and bottom of the fins. Holding it from the sides can damage the fins.

CAUTION

To avoid damage to the processor or system board, only authorized personnel should attempt to replace or install the processor in this server.

CAUTION

To prevent possible server malfunction and damage to the equipment, multiprocessor configurations must contain processors with the same part number.

CAUTION

If installing a processor with a faster speed, update the system ROM before installing the processor.

To download the firmware and view installation instructions, see the **Hewlett Packard Enterprise Support Center website**.

CAUTION

THE CONTACTS ARE VERY FRAGILE AND EASILY DAMAGED. To avoid damage to the socket or processor, do not touch the contacts.

2. Back up all server data.
3. .
4. Disconnect all peripheral cables from the server.
5. Remove the system board module from the chassis.
6. Place the system board module on a flat, level work surface.
7. Remove the system board module access panel.
8. Remove any components or cables that may prevent access to the processor socket.
9. Remove the dust cover from the processor socket you intend to upgrade.
10. Use a T-20 Torx screwdriver to loosen the three captive screws in the sequence shown in the following image, and then pivot the force frame upward.

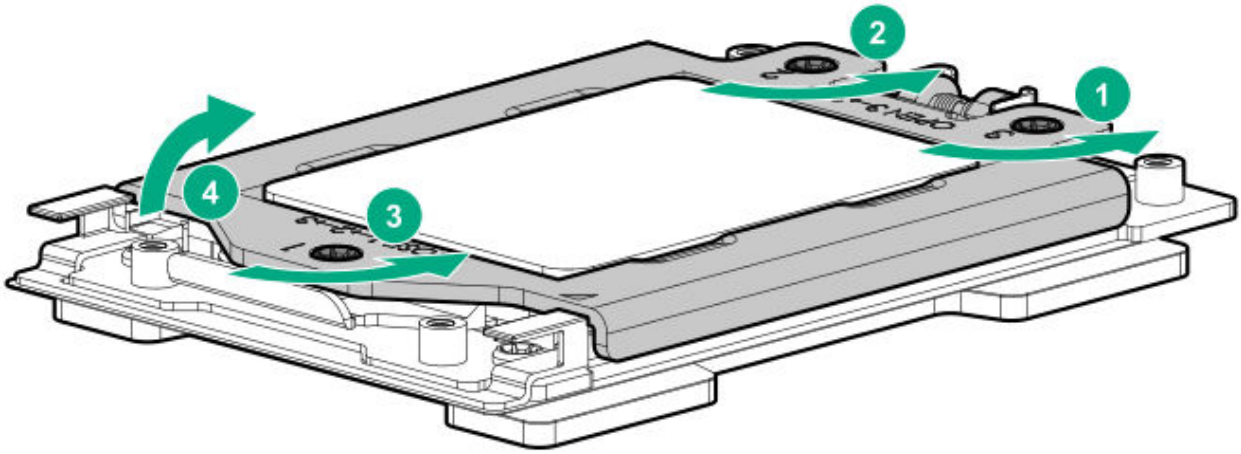

11. Remove the external cap:
    a. Hold the lift tabs near the front end of the rail frame, and then pivot the rail frame to the vertical position.
    b. Slide the external cap out of the rail frame.

       Retain the external cap for future use.

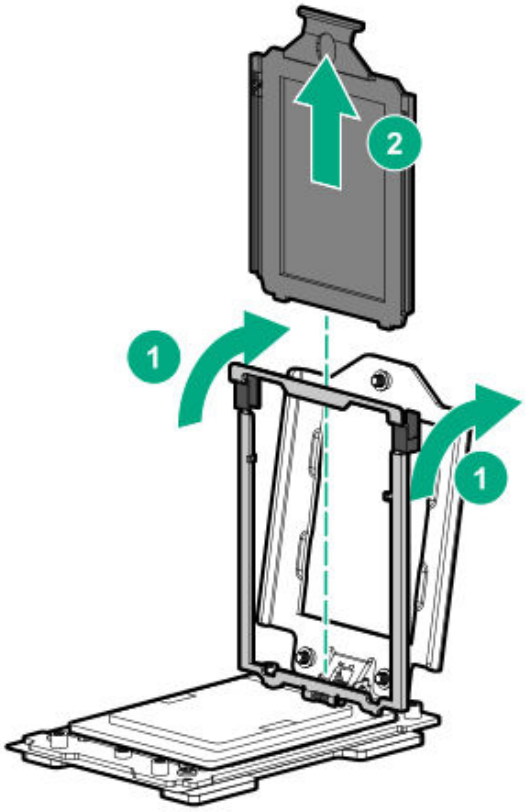

.2. Install the processor:

a. Hold the processor by its carrier handle and slide the processor into the rail frame until it engages with a click sound.

b. Remove the pin field cover cap.

> **CAUTION**
>
> To prevent the risk of damaging the pins in the processor socket, do not reinstall the pin field cover cap after removing it.

c. Hold the lift tabs near the front end of the rail frame, and then pivot the rail frame to the closed position.

   A click sound indicates that the rail frame is properly engaged.

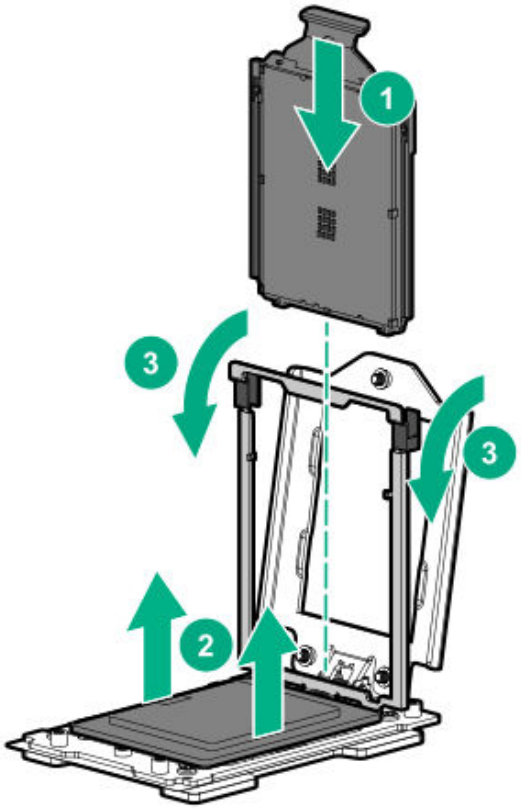

.3. Close the force frame:

> **CAUTION**
>
> Do not overtighten the screws as this might damage the system board or the processor socket.

a. Pivot the spring loaded force frame downward and hold it down (callout 1).

b. Use a T-20 Torx screwdriver to tighten the captive screws in the sequence shown in the following image (callouts 2–4).

   When using a torque wrench to tighten the screws, apply a torque of 1.58 N · m (14 lbf-in).

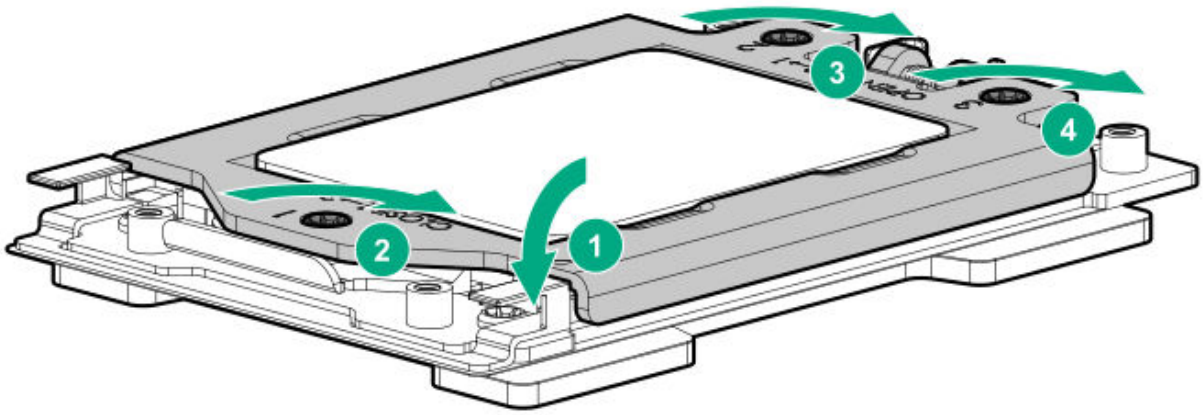

.4. Remove the thermal interface protective cover from the new heatsink.

.5. Install the heatsink:

> **CAUTION**
>
> To prevent mechanical damage or depositing oil on your hands or other contaminants to the heatsink contact surface, hold the heatsink only by the edge of its base plate. Do not touch the heatsink fins.

> **CAUTION**
>
> To prevent thermal failure or component damage, do not move the heatsink once the bottom of its base plate touches the top of the processor. Excessive heatsink movement can cause the thermal grease to smear and become uneven. Voids in the compound can adversely impact the transfer of heat away from the processor.

> **CAUTION**
>
> Heatsink screws must be tightened and loosened in alternating sequence. Do not overtighten the screws as this might damage the system board or the processor socket.

a. Position the heatsink on top of the processor, ensuring that it is properly seated before securing the screws.

b. Use a T-20 Torx screwdriver to tighten the captive screws in the sequence specified on the heatsink label.

When using a torque wrench to tighten the screws, apply a torque of 1.58 N-m (14 lbf-in).

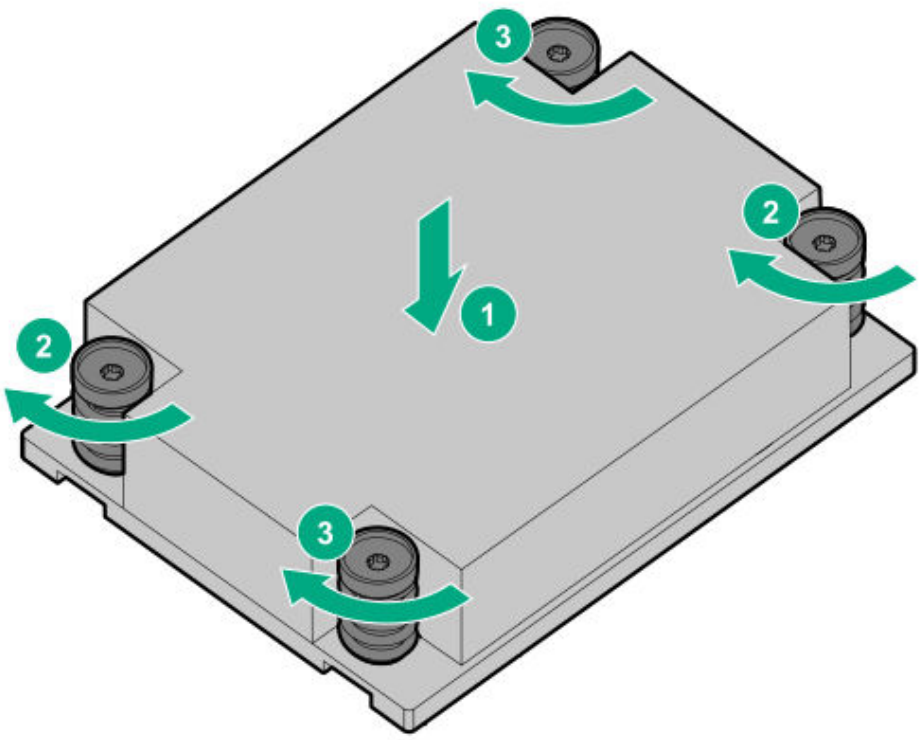

.6. Install any components or cables previously removed to access the processor socket.

.7. Install the system board module access panel.

.8. Install the system board module into the chassis.

.9. Connect all peripheral cables to the server.

!0. Power up the server.

Results

The installation is complete.

More information

Remove the system board module from the chassis
Remove the system board module access panel
Install the system board module access panel
Install the system board module into the chassis

OCP NIC 3.0 adapter option

The server supports SFF dual-port and quad-port OCP NIC 3.0 adapter options with various interfaces and advanced interconnect features for high-bandwidth applications.

Subtopics

Installing the OCP NIC 3.0 adapter option
Enabling the OCP adapter as the iLO network interface adapter

Installing the OCP NIC 3.0 adapter option

Prerequisites

Before you perform this procedure, make sure that you have the following items available:

- The components included with the hardware option kit
- T-10 Torx screwdriver

Procedure

1. .
2. Remove the system board module from the chassis.
3. Place the system board module on a flat, level work surface.
4. Remove the system board module access panel.
5. Remove the primary PCIe riser cage.
6. Remove the OCP NIC 3.0 adapter blank.

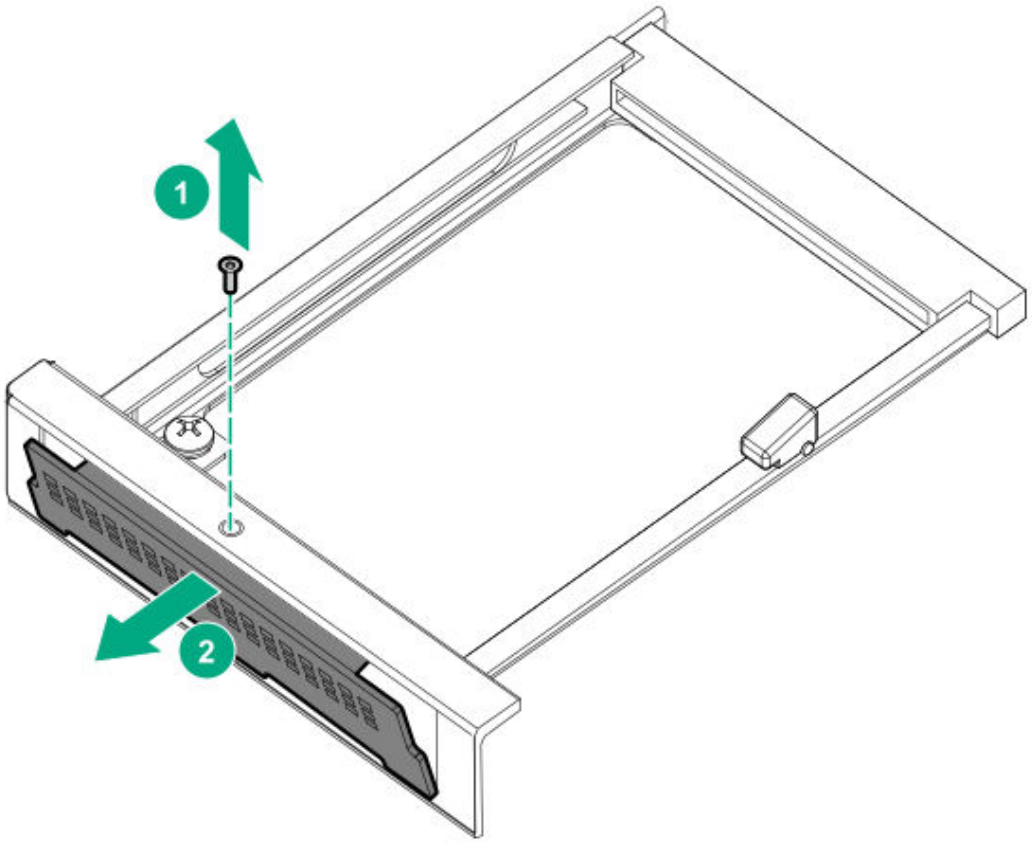

7. Some servers provide a locking latch. Lift the locking latch, and then slide the OCP NIC 3.0 adapter through the rear of the chassis. Align and install the OCP NIC 3.0 adapter into the slot. Press firmly to fully seat the adapter into the connector. Rotate the latch to lock the adapter in place.

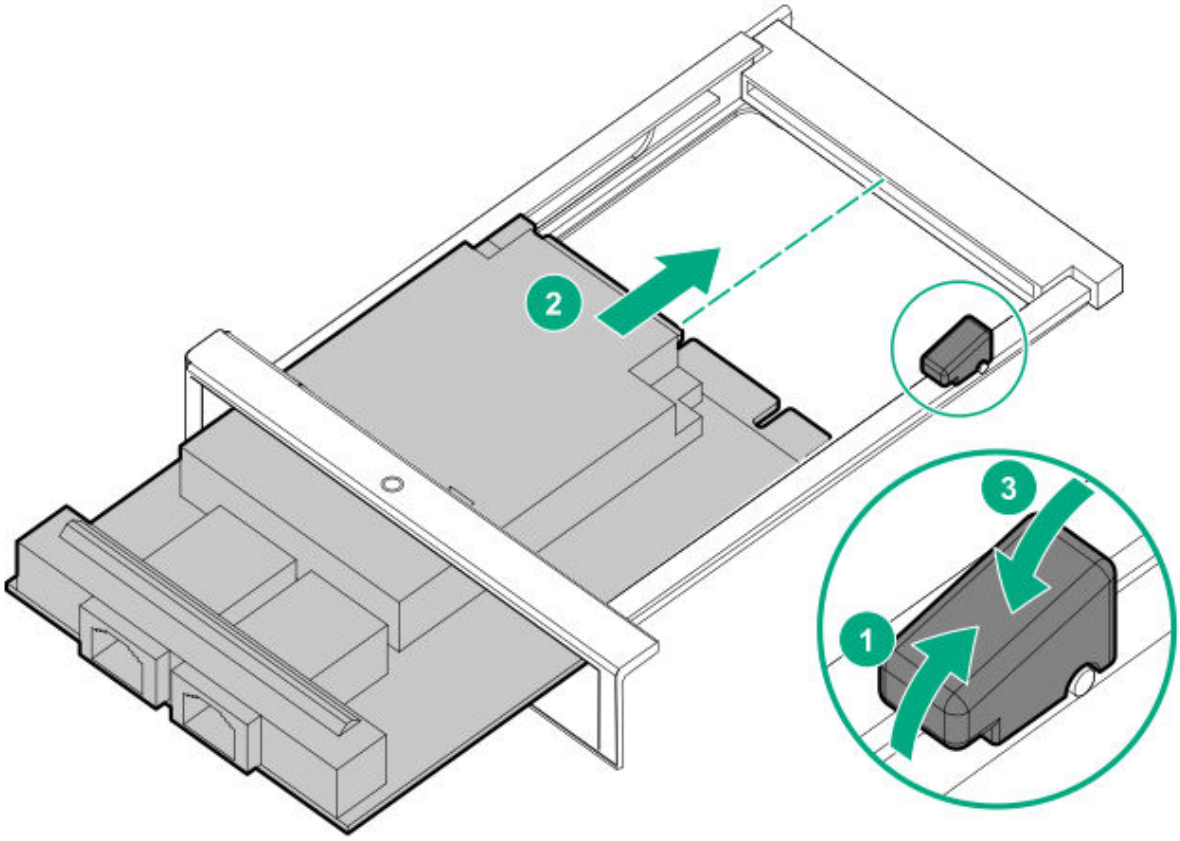

8. Install the primary PCIe riser cage.
9. Do one of the following:
    - Connect the OCP NIC 3.0 adapter cables.
    - Install a compatible transceiver option.
10. Install the system board module access panel.
11. Install the system board module in the chassis.
12. Power up the server.

Results

The installation is complete.

Example

If you want to use the OCP adapter as the iLO network interface adapter, use the Network Interface Adapter menu in the UEFI System Utilities (Enabling the OCP adapter as the iLO network interface adapter).

More information

Remove the system board module from the chassis
Remove the system board module access panel
Remove a PCIe riser
Installing a PCIe riser
Install the system board module access panel
Install the system board module into the chassis

Enabling the OCP adapter as the iLO network interface adapter

Procedure

1. During the server startup sequence, press the **F9** key to access System Utilities.
2. From the **System Utilities** screen, select **System Configuration > iLO 5 Configuration Utility > Network Options**.
3. Select **Shared Network Port – FlexibleLOM/OCP** from the **Network Interface Adapter** drop-down menu.
4. Save the setting.

Installing the HPE NS204i-t Gen10 Plus NVMe Boot Controller option

Prerequisites

Before you perform this procedure, make sure that you have the following items available:

- The components included with the hardware option kit
- T-10 Torx screwdriver
- SAS Secondary Riser to Half Width System Board M.2 cable
- At least one M.2 SSD module

About this task

M.2 SSD modules install on the HPE NS204i-t Gen10 Plus NVMe Boot Controller on the system board. You can install up to two M.2 SSD modules per system board module.

For drive bay locations, see HPE NS204i-t Gen10 Plus NVMe Boot Controller components.

Procedure

1. .
2. Disconnect all peripheral cables from the server.
3. Remove the system board module from the chassis.
4. Place the system board module on a flat, level work surface.
5. Remove the system board module access panel.
6. Remove the midplane interposer.
7. Install the M.2 SSD drives on the boot controller:
   a. Install an M.2 SSD on drive bay 2.

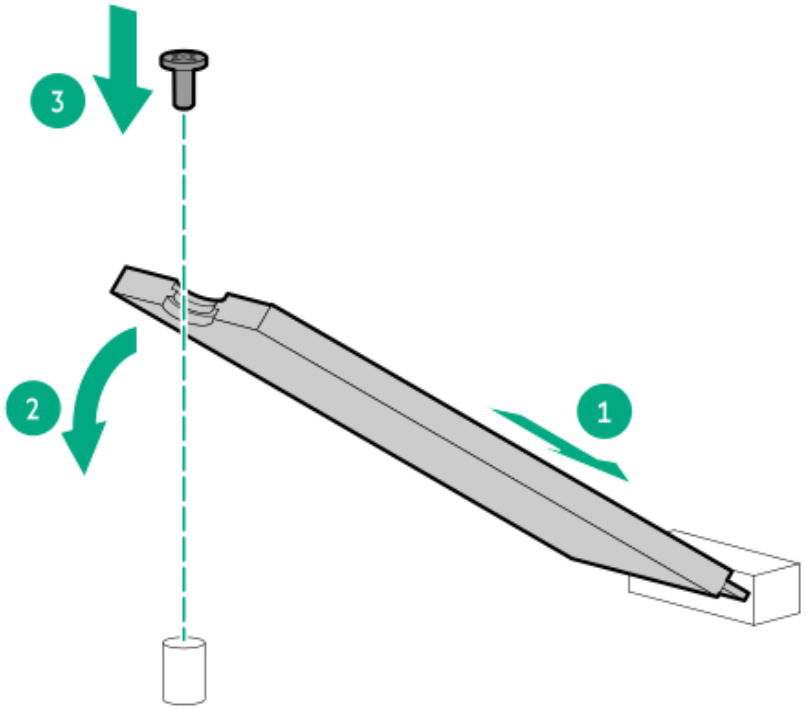

   b. Turn over the boot controller.
   c. Install an M.2 SSD on drive bay 1.

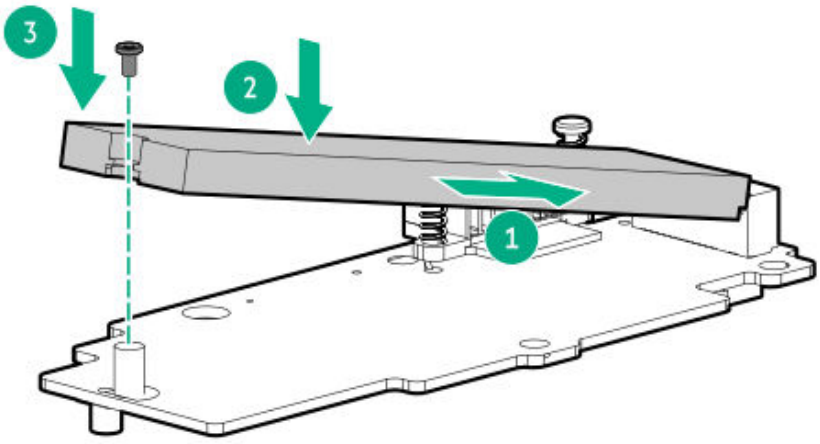

8. Install the boot controller on the system board.

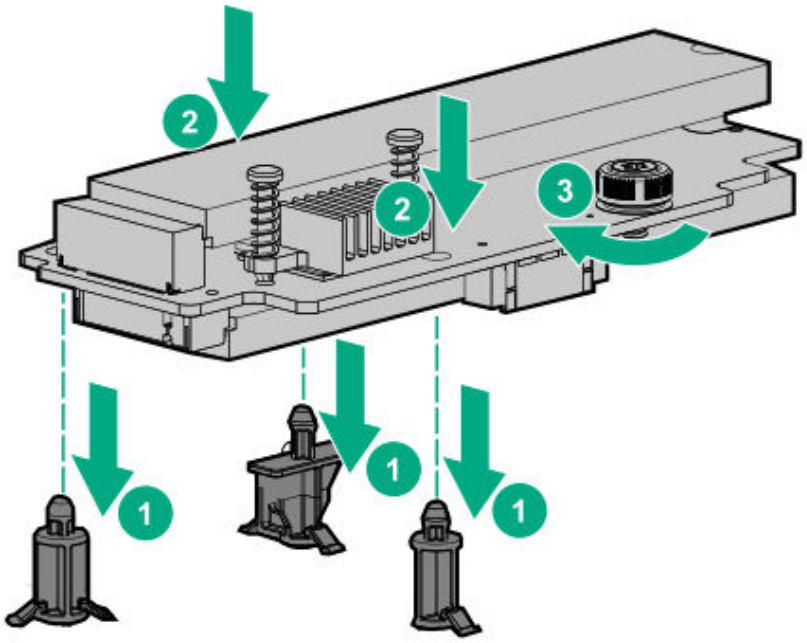

9. Connect the Slim SAS cable to port 2 of the secondary riser.

   For secondary riser port information, see Secondary riser board components.

10. Install the system board module access panel.
11. Install the system board module into the chassis.
12. Connect all peripheral cables to the server.
13. Power up the server.

Results

The installation is complete.

More information

Remove the system board module from the chassis
Remove the system board module access panel
Remove the midplane interposer
Install the system board module into the chassis
Install the system board module access panel

HPE Smart Storage Battery

The HPE Smart Storage Battery supports the following devices:

- HPE Smart Array SR controllers

After the battery is installed, it might take up to two hours to charge. Controller features requiring backup power are not re-enabled until the battery is capable of supporting the backup power.

This server supports the 12 W HPE Smart Storage Battery with the 230 mm cable.

Subtopics

Installing an HPE Smart Storage Battery

Installing an HPE Smart Storage Battery

Prerequisites

Before you perform this procedure, make sure that you have the following items available:

- T-10 Torx screwdriver
- The components included with the hardware option kit
- Storage controller backup power cable (ships with the storage controller)

Make sure that a supported Smart Array P-class Gen10 controller is installed.

About this task

NOTE

System ROM and firmware messages might display "energy pack" in place of "Smart Storage Battery." Energy pack refers to both HPE Smart Storage batteries and HPE Smart Storage Hybrid capacitors.

Procedure

1. Observe the following alerts:

   WARNING

   To reduce the risk of personal injury from hot surfaces, allow the drives and the internal system components to cool before touching them.

   CAUTION

   To prevent damage to electrical components, properly ground the server before beginning any installation procedure. Improper grounding can cause electrostatic discharge.

2. Back up all server data.
3. .
4. Disconnect all peripheral cables from the server.
5. Remove the system board module from the chassis.
6. Place the system board module on a flat, level work surface.
7. Remove the system board module access panel.
8. Install the HPE Smart Storage Battery into the socket.

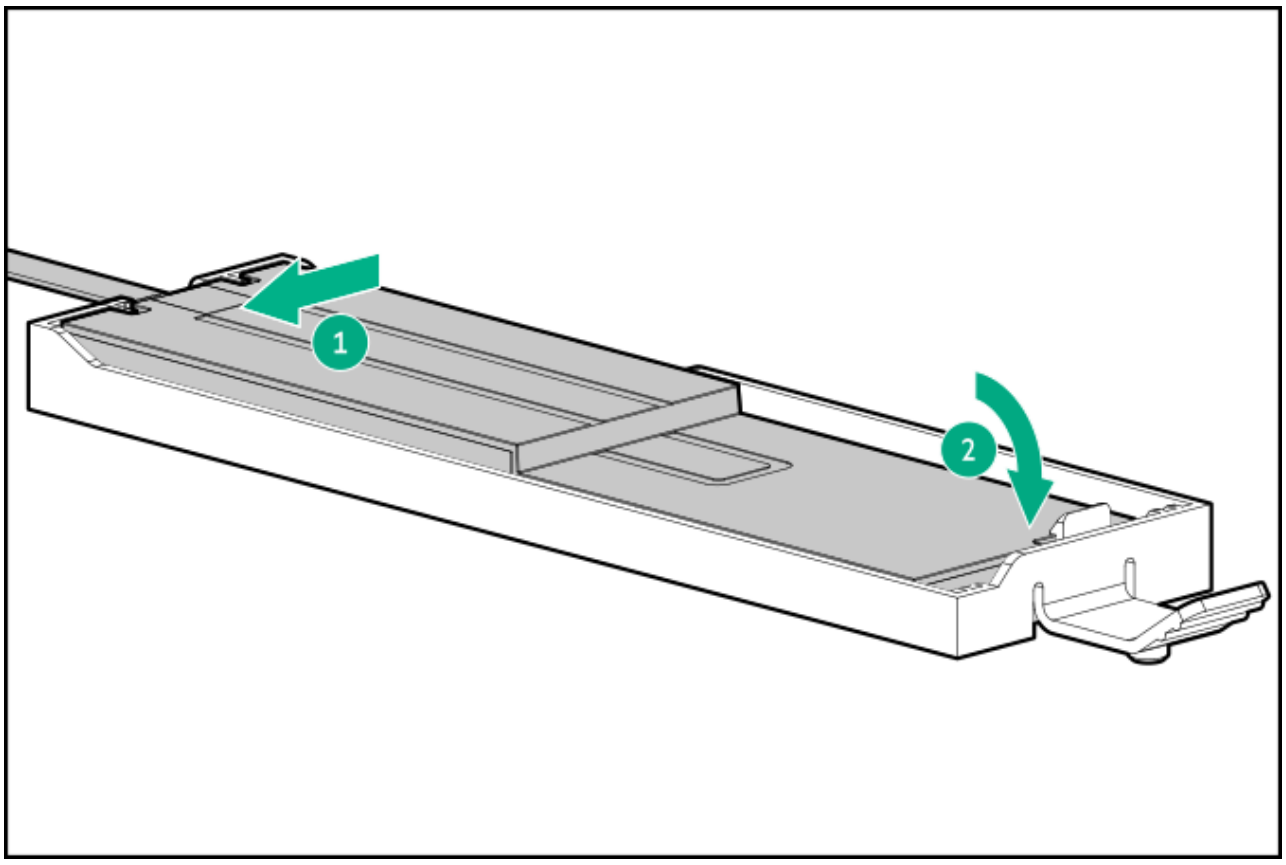

9. Install the HPE Smart Storage Battery into the system board module and connect the storage controller backup power cable.

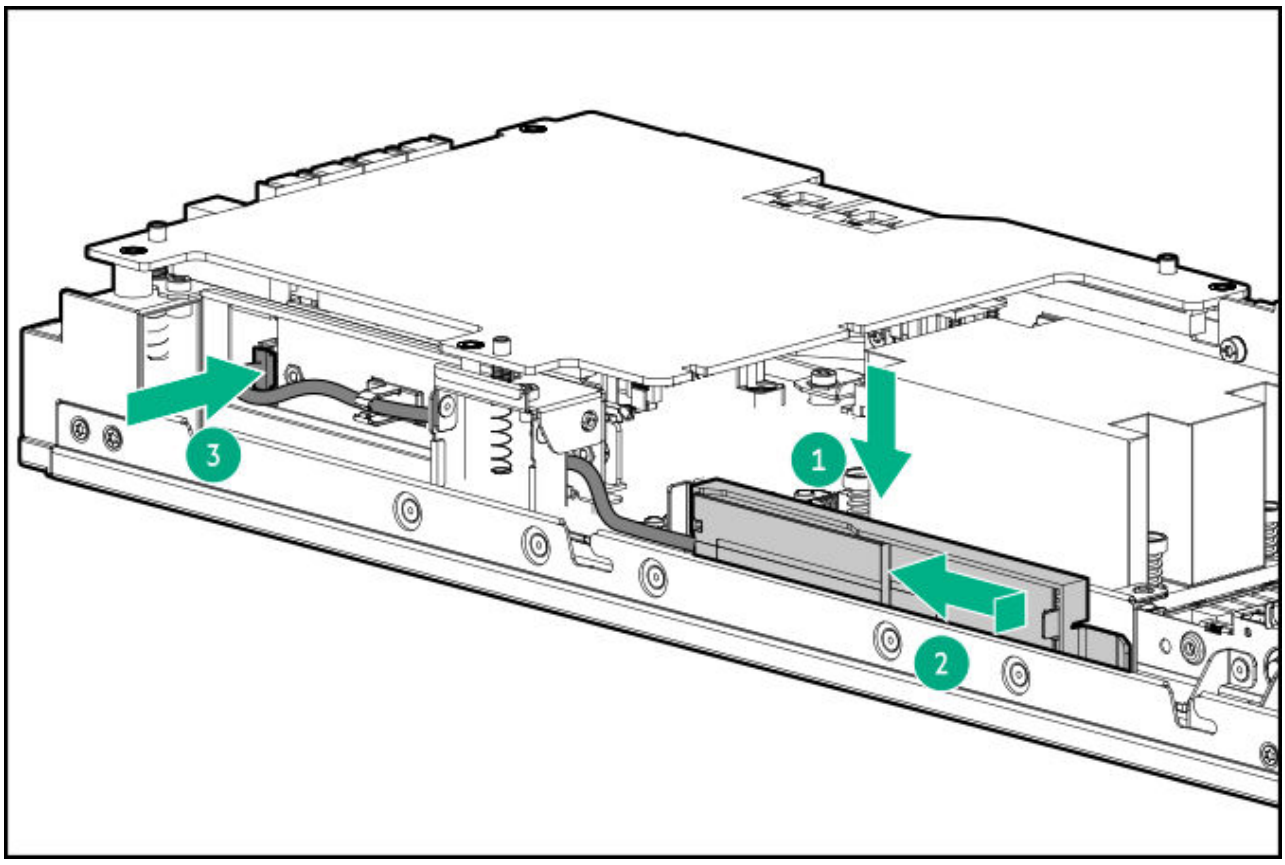

.0. Install the system board module access panel.

.1. Install the system board module into the chassis.

.2. Connect all peripheral cables to the server.

.3. Power up the server.

Results

The installation is complete.

More information

Remove the system board module from the chassis
Remove the system board module access panel
Install the system board module access panel
Install the system board module into the chassis
HPE Smart Storage Battery cabling
Secondary riser board components

HPE Trusted Platform Module 2.0 Gen10 Plus option

Subtopics

Overview
HPE Trusted Platform Module 2.0 guidelines
Installing and enabling the HPE TPM 2.0 Gen10 Plus option

Overview

Use these instructions to install and enable an HPE TPM 2.0 Gen10 Plus Kit in a supported server. This option is not supported on Gen10 and earlier servers.

This procedure includes three sections:

1. Installing the Trusted Platform Module board.
2. Enabling the Trusted Platform Module.
3. Retaining the recovery key/password.

HPE TPM 2.0 installation is supported with specific operating system support such as Microsoft Windows Server 2012 R2 and later. For more information about operating system support, see the product QuickSpecs on the Hewlett Packard Enterprise website (**https://www.hpe.com/info/qs**). For more information about Microsoft Windows BitLocker Drive Encryption feature, see the Microsoft website (**https://www.microsoft.com**).

CAUTION

If the TPM is removed from the original server and powered up on a different server, data stored in the TPM including keys will be erased.

IMPORTANT

In UEFI Boot Mode, the server can be configured to operate as TPM 2.0 (default) or TPM 1.2 on a supported server. In Legacy Boot Mode, the configuration can be changed between TPM 1.2 and TPM 2.0, but only TPM 1.2 operation is supported.

HPE Trusted Platform Module 2.0 guidelines

CAUTION

Always observe the guidelines in this document. Failure to follow these guidelines can cause hardware damage or halt data access.

Hewlett Packard Enterprise SPECIAL REMINDER: Before enabling TPM functionality on this system, you must ensure that your intended use of TPM complies with relevant local laws, regulations and policies, and approvals or licenses must be obtained if applicable.

For any compliance issues arising from your operation/usage of TPM which violates the above mentioned requirement, you shall bear all the liabilities wholly and solely. Hewlett Packard Enterprise will not be responsible for any related liabilities.

慧与特别提醒：在您启用系统中的TPM功能前，请务必确认您对TPM的使用遵守当地相关法律、法规及政策，并已事先获得所需的一切批准及许可（如适用），因您未获得相应的操作/使用许可而导致的违规问题，皆由您自行承担全部责任，与慧与无涉。

When installing or replacing a TPM, observe the following guidelines:

- Do not remove an installed TPM. Once installed, the TPM becomes a permanent part of the system board.
- When installing or replacing hardware, Hewlett Packard Enterprise service providers cannot enable the TPM or the encryption technology. For security reasons, only the customer can enable these features.
- When returning a system board for service replacement, do not remove the TPM from the system board. When requested, Hewlett Packard Enterprise Service provides a TPM with the spare system board.
- Any attempt to remove the cover of an installed TPM from the system board can damage the TPM cover, the TPM, and the system board.
- If the TPM is removed from the original server and powered up on a different server, all data stored in the TPM including keys will be erased.
- When using BitLocker, always retain the recovery key/password. The recovery key/password is required to complete Recovery Mode after BitLocker detects a possible compromise of system integrity.
- Hewlett Packard Enterprise is not liable for blocked data access caused by improper TPM use. For operating instructions, see the TPM documentation or the encryption technology feature documentation provided by the operating system.

Installing and enabling the HPE TPM 2.0 Gen10 Plus option

Subtopics

Installing the Trusted Platform Module board
Enabling the Trusted Platform Module
Retaining the BitLocker recovery key/password

Installing the Trusted Platform Module board

Subtopics

Preparing the server for installation
Installing the TPM board and cover
Preparing the server for operation

Preparing the server for installation

Procedure

1. Observe the following warnings:



WARNING

The front panel Power On/Standby button does not shut off system power. Portions of the power supply and some internal circuitry remain active until AC power is removed.
To reduce the risk of personal injury, electric shock, or damage to the equipment, remove power from the server:

- For rack and tower servers, remove the power cord.
- For server blades and compute modules, remove the server blade or compute module from the chassis.



WARNING

To reduce the risk of personal injury from hot surfaces, allow the drives and the internal system components to cool before touching them.

2. Update the system ROM.

   Locate and download the latest ROM version from the Hewlett Packard Enterprise Support Center website (**https://www.hpe.com/support/hpesc**). To update the system ROM, follow the instructions on the website.

3. Power down the server:

   a. Shut down the OS as directed by the OS documentation.

   b. To place the server in standby mode, press the Power On/Standby button. When the server enters standby power mode, the system power LED changes to amber.

   c. Disconnect the power cords (rack and tower servers).

4. Remove the system board module from the chassis.

5. Place the system board module on a flat, level work surface.

6. Remove the system board module access panel.

7. Remove any options or cables that might prevent access to the TPM connector.

8. Proceed to "Installing the TPM board and cover."

More information

Remove the system board module from the chassis
Remove the system board module access panel

Installing the TPM board and cover

Procedure

1. Observe the following alerts:

> **CAUTION**
>
> If the TPM is removed from the original server and powered up on a different server, data stored in the TPM including keys will be erased.

> **CAUTION**
>
> The TPM is keyed to install only in the orientation shown. Any attempt to install the TPM in a different orientation might result in damage to the TPM or system board.

2. Install the TPM board:
   a. Locate the TPM connector on the system board. See the server hood label for the exact location.
   b. Align the TPM board with the key on the connector, and then install the TPM board. To seat the board, press the TPM board firmly into the connector.

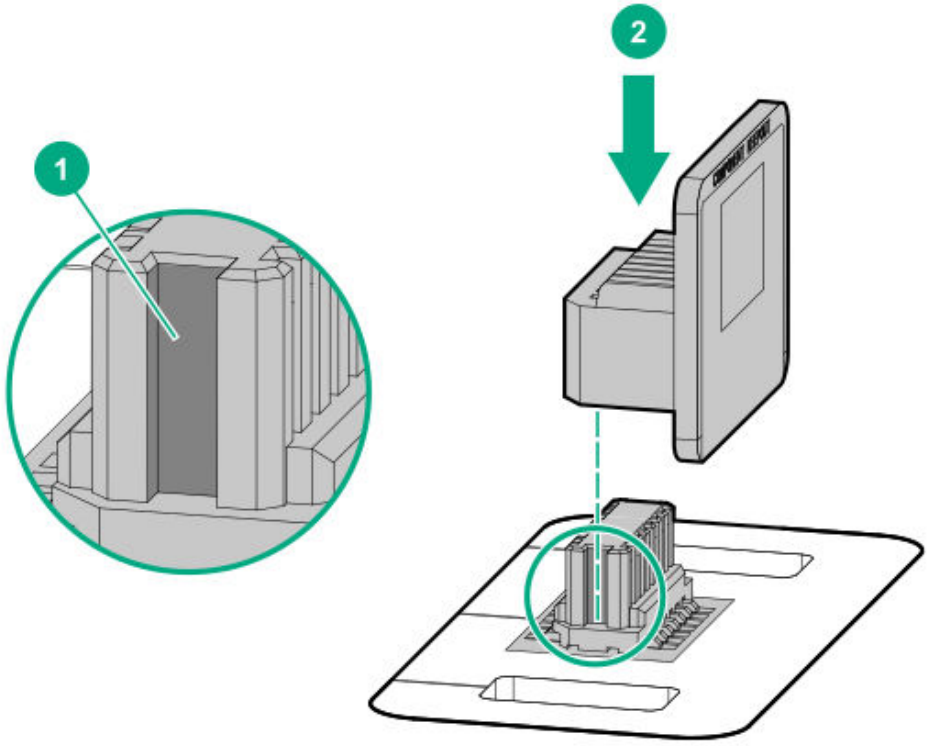

3. Install the TPM cover:
    a. Align the pins on the cover with the openings on the system board.
    b. Press straight down on the middle of the cover until the alignment pins are seated into the holes.

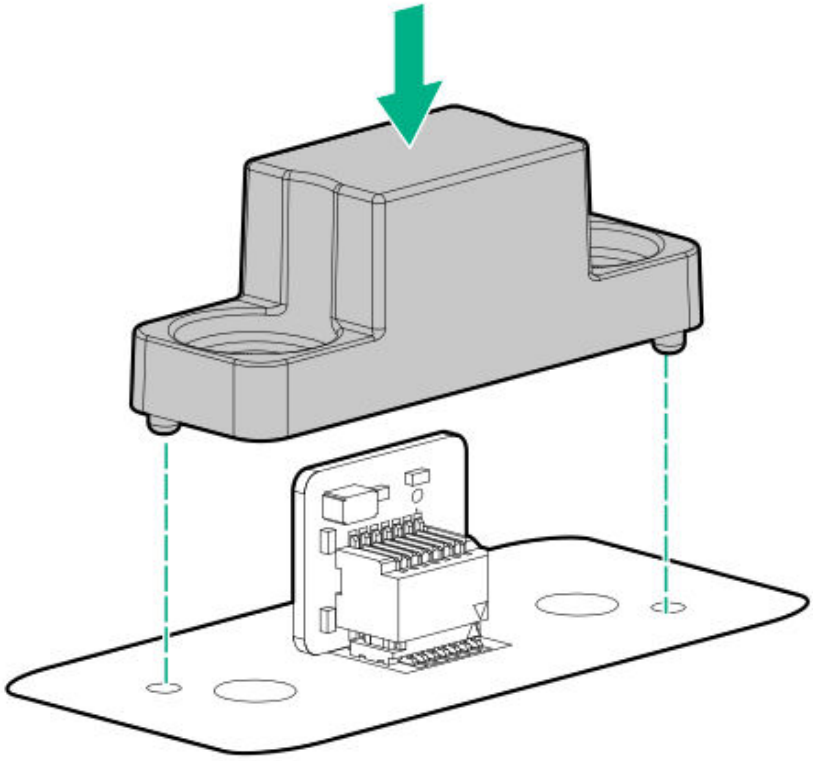

4. Secure the rivets into place by pushing them firmly through the holes in the TPM cover.

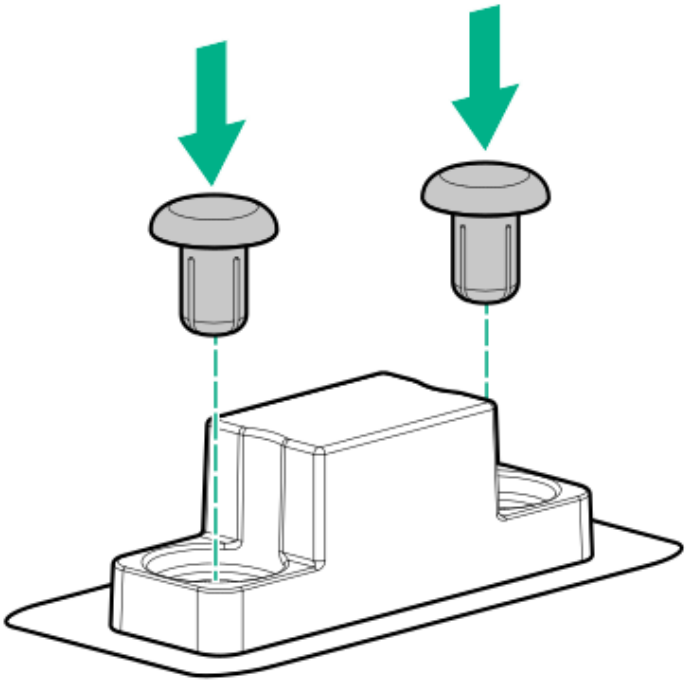

5. Proceed to "Preparing the server for operation."

Preparing the server for operation

Procedure

1. Install any options or cables previously removed to access the TPM connector.
2. Install the system board module access panel.
3. Install the system board module into the chassis.
4. Connect the power cords to the server.
5. Power up the server.

Enabling the Trusted Platform Module

When enabling the Trusted Platform module, observe the following guidelines:

- By default, the Trusted Platform Module is enabled as TPM 2.0 when the server is powered on after installing it.
- In UEFI Boot Mode, the Trusted Platform Module can be configured to operate as TPM 2.0 (default) or TPM 1.2.
- In Legacy Boot Mode, the Trusted Platform Module configuration can be changed between TPM 1.2 and TPM 2.0 (default), but only TPM 1.2 operation is supported.

Subtopics

Enabling the Trusted Platform Module as TPM 2.0
Enabling the Trusted Platform Module as TPM 1.2

Enabling the Trusted Platform Module as TPM 2.0

About this task

Procedure

1. From the boot screen, press **F9** to access the UEFI System Utilities.
2. From the **System Utilities** screen, select **System Configuration > BIOS/Platform Configuration (RBSU) > Server Security > Trusted Platform Module options**.
3. Verify the following:
   - "Current TPM Type" is set to **TPM 2.0**.
   - "Current TPM State" is set to **Present and Enabled**.
   - "TPM Visibility" is set to **Visible**.
4. If changes were made in the previous step, press **F10** to save your selection.
5. If **F10** was pressed in the previous step, do one of the following:
   - If in graphical mode, click **Yes**.
   - If in text mode, press the **Y** key.
6. Press **Esc** to exit System Utilities.

7. If changes were made and saved, the server prompts for reboot request. Press **Enter** to confirm reboot.

   If the following actions were performed, the server reboots a second time without user input. During this reboot, the TPM setting becomes effective.

   - Changing from TPM 1.2 and TPM 2.0
   - Changing TPM bus from FIFO to CRB
   - Enabling or disabling TPM
   - Clearing the TPM

8. Enable TPM functionality in the OS, such as Microsoft Windows BitLocker or measured boot.

   For more information, see the **Microsoft website**.

Enabling the Trusted Platform Module as TPM 1.2

About this task

Procedure

1. From the boot screen, press **F9** to access the UEFI System Utilities.
2. From the **System Utilities** screen, select **System Configuration > BIOS/Platform Configuration (RBSU) > Server Security > Trusted Platform Module options**.
3. Change the **TPM Mode Switch Operation** to **TPM 1.2**.
4. Verify that "TPM Visibility" is set to **Visible**.
5. Press **F10** to save your selection.
6. When prompted to save the change in System Utilities, do one of the following:
   - If in graphical mode, click **Yes**.
   - If in text mode, press the **Y** key.
7. Press **Esc** to exit System Utilities.

   The server reboots a second time without user input. During this reboot, the TPM setting becomes effective.

8. Enable TPM functionality in the OS, such as Microsoft Windows BitLocker or measured boot.

For more information, see the **Microsoft website**.

Retaining the BitLocker recovery key/password

The recovery key/password is generated during BitLocker setup, and can be saved and printed after BitLocker is enabled. When using BitLocker, always retain the recovery key/password. The recovery key/password is required to enter Recovery Mode after BitLocker detects a possible compromise of system integrity.

To help ensure maximum security, observe the following guidelines when retaining the recovery key/password:

- Always store the recovery key/password in multiple locations.
- Always store copies of the recovery key/password away from the server.
- Do not save the recovery key/password on the encrypted hard drive.

Cabling

Subtopics

Cabling guidelines
Front I/O cabling
Display port cabling
Fan cabling
Drive-controller-backplane configuration cabling
2 NVMe + M.2 configuration cabling for chassis 1
2 NVMe + M.2 configuration cabling for chassis 2
6 NVMe + M.2 configuration cabling for chassis 2
HPE Smart Storage Battery cabling
Power switch cabling
Drive backplane power cabling
GPU power cabling

Cabling guidelines

The cabling diagrams in this chapter used different colors to better differentiate one cable from another for illustration clarity. Most of the system cables are actually black.

Observe the following guidelines when working with system cables.

Before connecting cables

- Note the port labels on the PCA components. Not all these components are used by all systems:
  - System board ports
  - Drive and power supply backplane ports
  - Expansion card ports (controllers, adapters, expanders, risers, and similar boards)
- Note the label near each cable connector. This label indicates the destination port for the cable connector.
- Some data cables are prebent. Do not unbend or manipulate the cables.
- To prevent mechanical damage or depositing oil that is present on your hands, and other contamination, do not touch the ends of the connectors.

When connecting cables

- Before connecting a cable to a port, lay the cable in place to verify the length of the cable.
- Use the internal cable management features to properly route and secure the cables.
- When routing cables, be sure that the cables are not in a position where they can be pinched or crimped.
- Avoid tight bend radii to prevent damaging the internal wires of a power cord or a server cable. Never bend power cords and server cables tight enough to cause a crease in the sheathing.
- Make sure that the excess length of cables is properly secured to avoid excess bends, interference issues, and airflow restriction.
- To prevent component damage and potential signal interference, make sure that all cables are in their appropriate routing position before installing a new component and before closing up the server.

When disconnecting cables

- Grip the body of the cable connector. Do not pull on the cable itself because this action can damage the internal wires of the cable or the pins on the port.

- If a cable does not disconnect easily, check for any release latch that must be pressed to disconnect the cable.

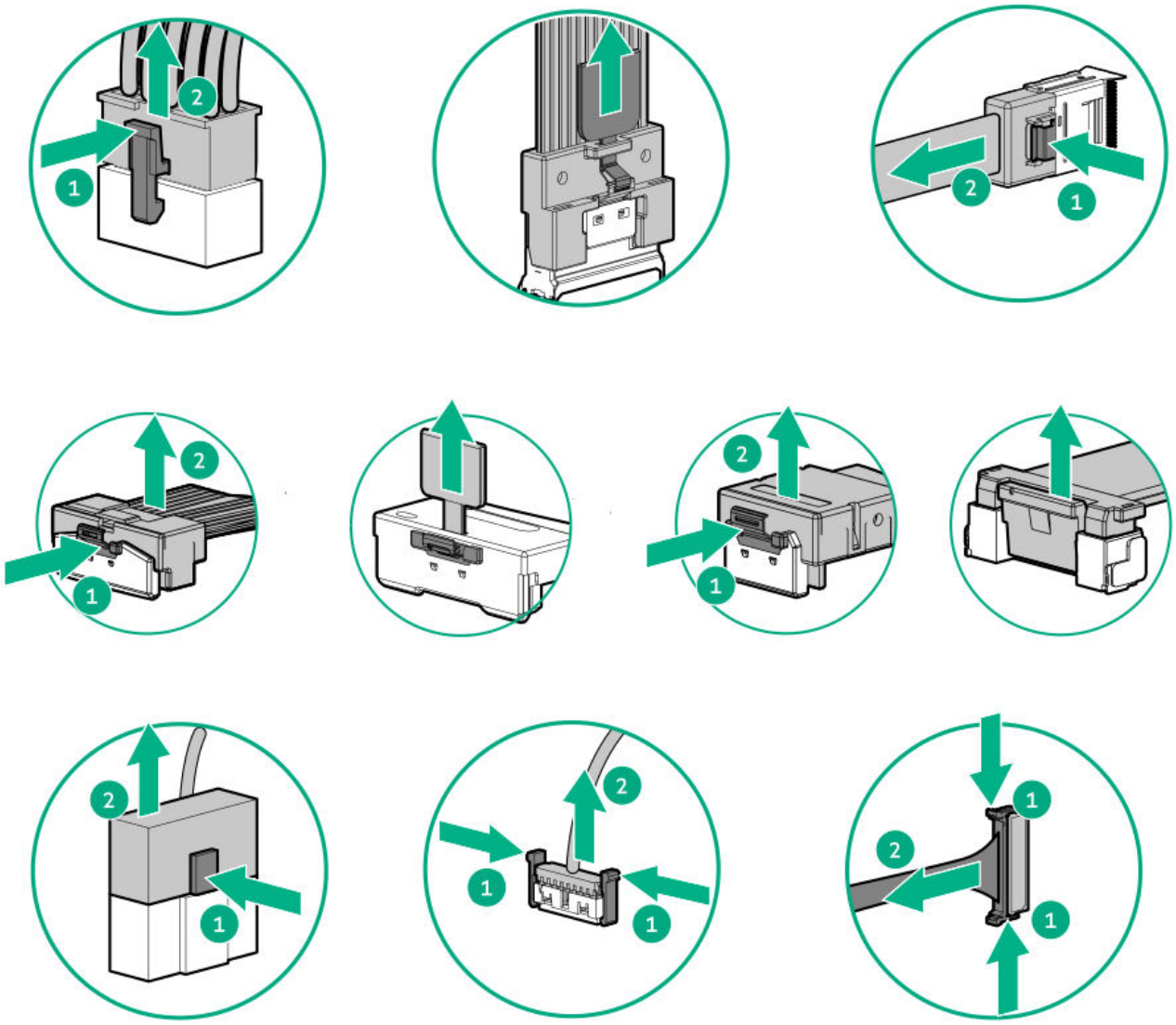

- Remove cables that are no longer being used. Retaining them inside the system can restrict airflow. If you intend to use the removed cables later, label and store them for future use.

Front I/O cabling

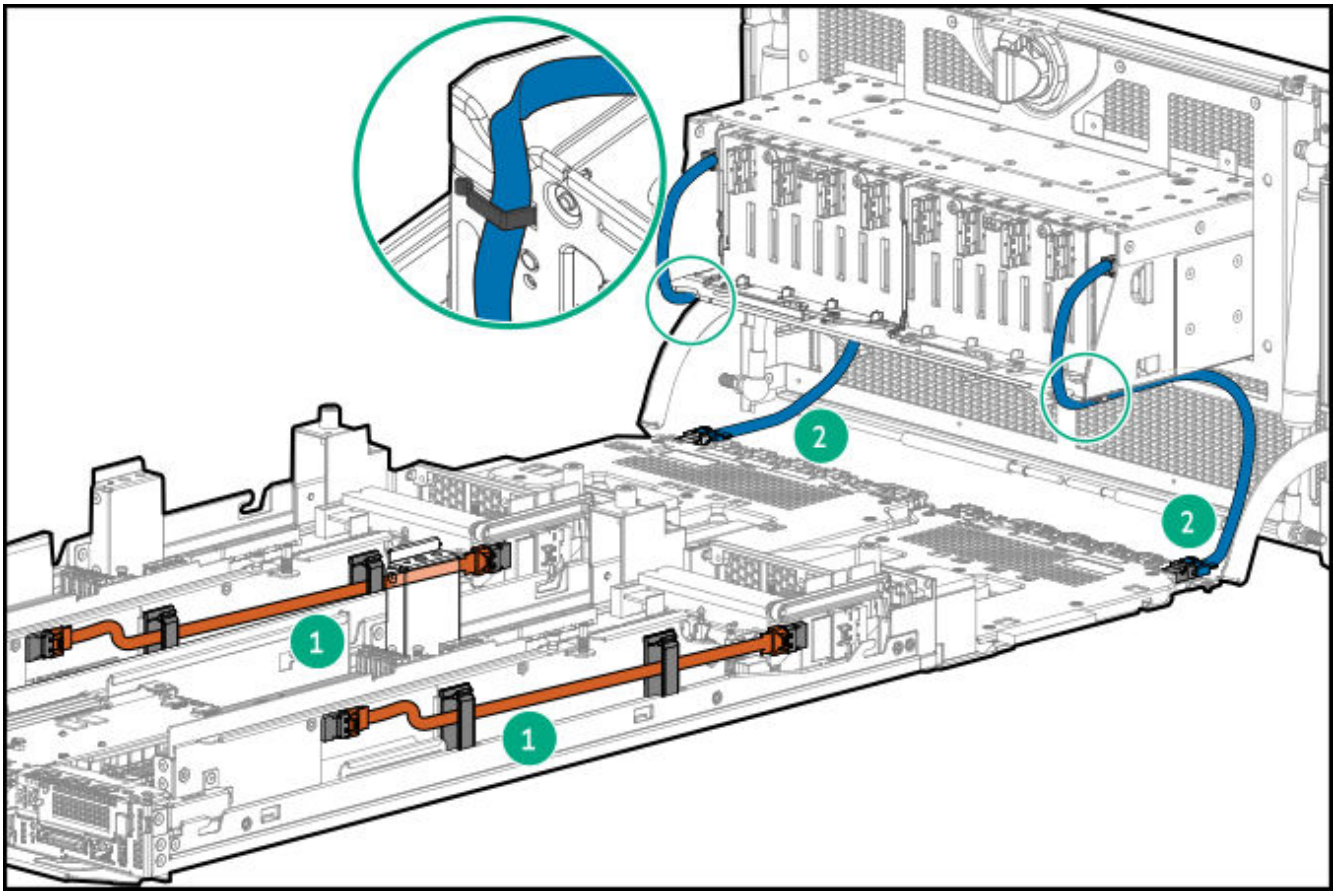

Item	Description
1	Front I/O Secondary Riser to System Board Storage Interposer x4 Slim SAS to x4 Slim SAS cable routing
2	Front I/O, Front Panel Pass-Thru Board to Front Panel x4 Slim SAS cable routing

Display port cabling

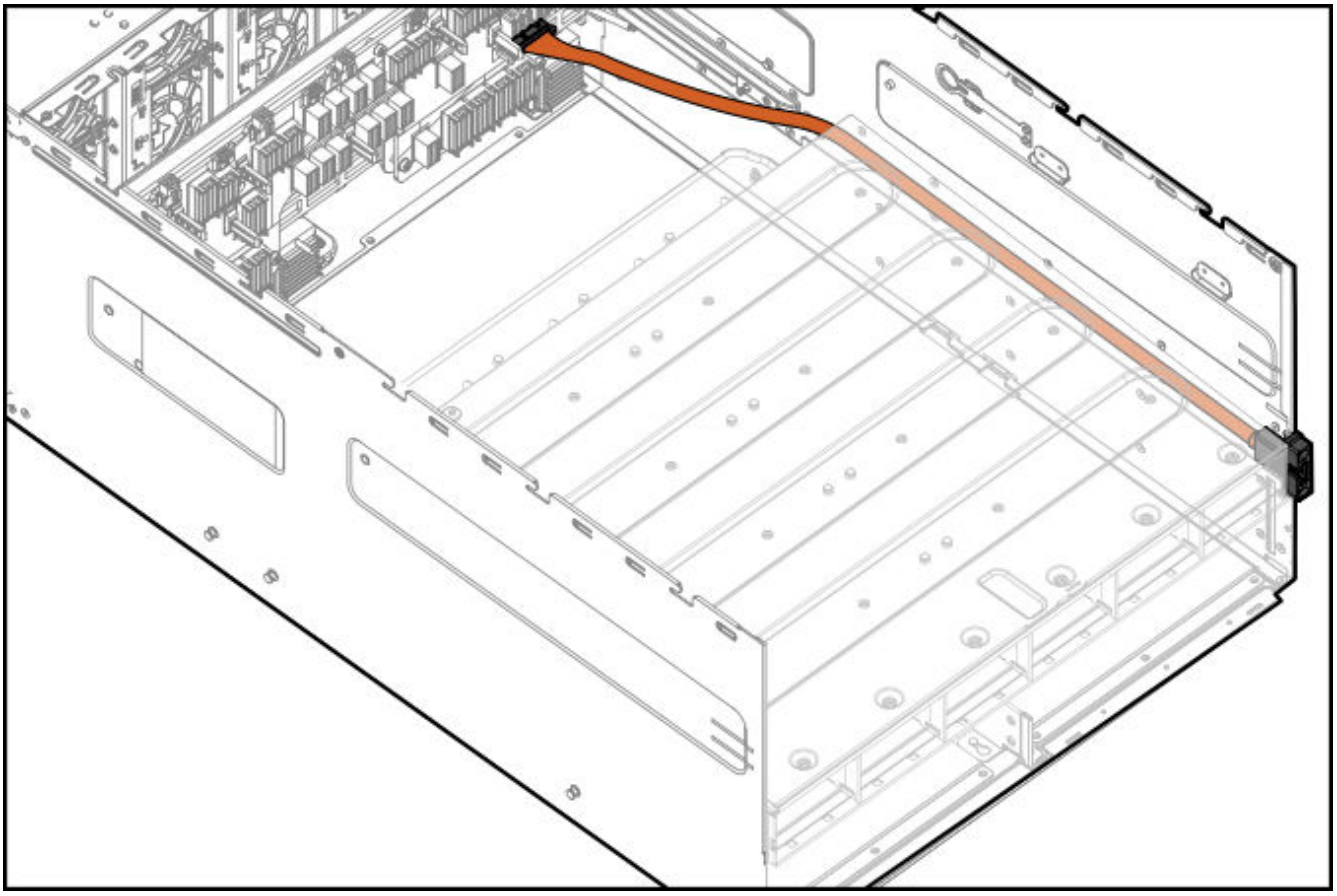

Uses the Midplane to Chassis Rear Wall Display Port cable.

Fan cabling

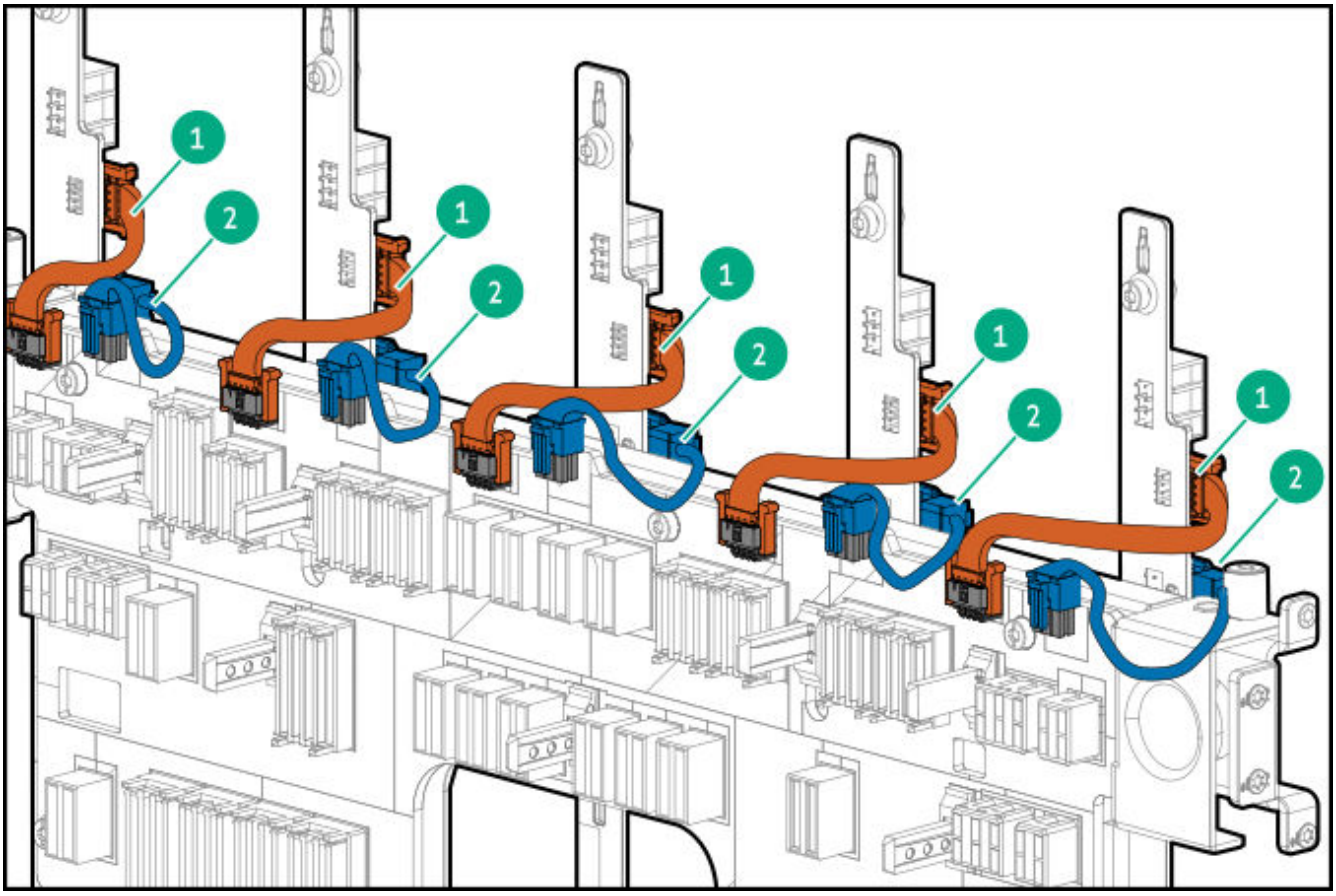

Item	Description
1	Fan Midplane to Fan Control cabling
2	Fan Midplane to Fan Power cabling

Drive-controller-backplane configuration cabling

Subtopics

Gen10 Plus 8 SFF SAS/SATA Standard backplane cabling
SAS/SATA-NVMe configuration cabling
HPE NS204i-t Gen10 Plus NVMe Boot Controller -M.2 SSD module cabling

Gen10 Plus 8 SFF SAS/SATA Standard backplane cabling

Subtopics

[8 embedded SATA configuration cabling for chassis 1]
[8 embedded SATA configuration cabling for chassis 2]
[8 SAS/SATA (Smart Array) configuration cabling for chassis 1]
[8 SAS/SATA (Smart Array) configuration cabling for chassis 2]
[8 + 8 embedded SATA configuration cabling]
[8 + 8 SAS/SATA with E208i-p/P408i-p controller configuration cabling]

8 embedded SATA configuration cabling for chassis 1

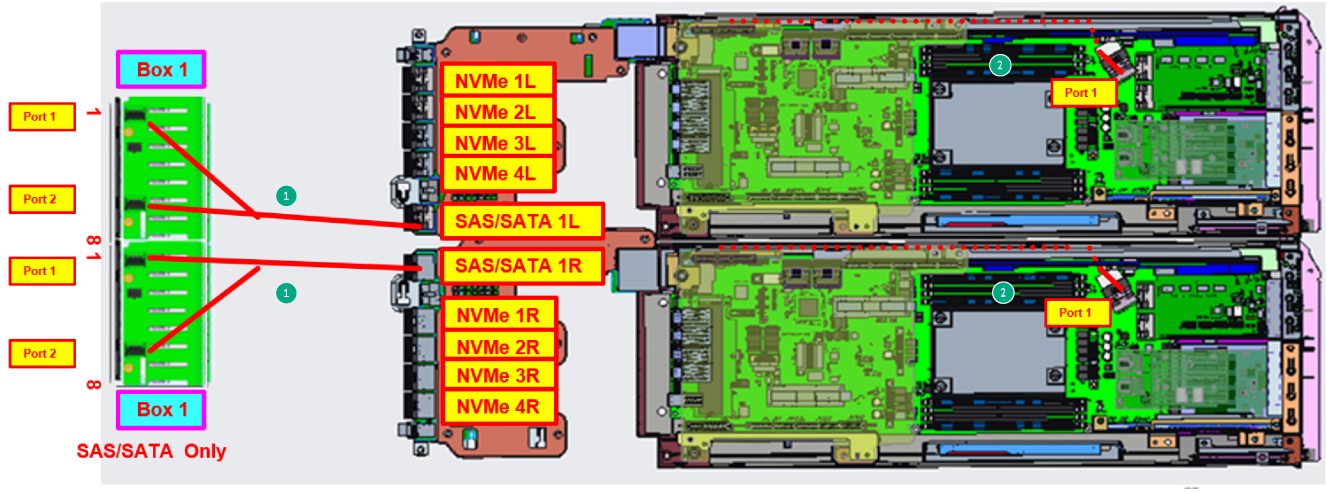

Cable PN	From	To	Color
P27271-002	Front panel pass through SAS/SATA 1L	SAS/SATA backplane port 1	Red (callout 1)
		SAS/SATA backplane port 2	
	Front panel pass through SAS/SATA 1R	SAS/SATA backplane port 1	
		SAS/SATA backplane port 2	
P28453-001	Half width MB port 1	MB storage interposer	Red dots (callout 2)

8 embedded SATA configuration cabling for chassis 2

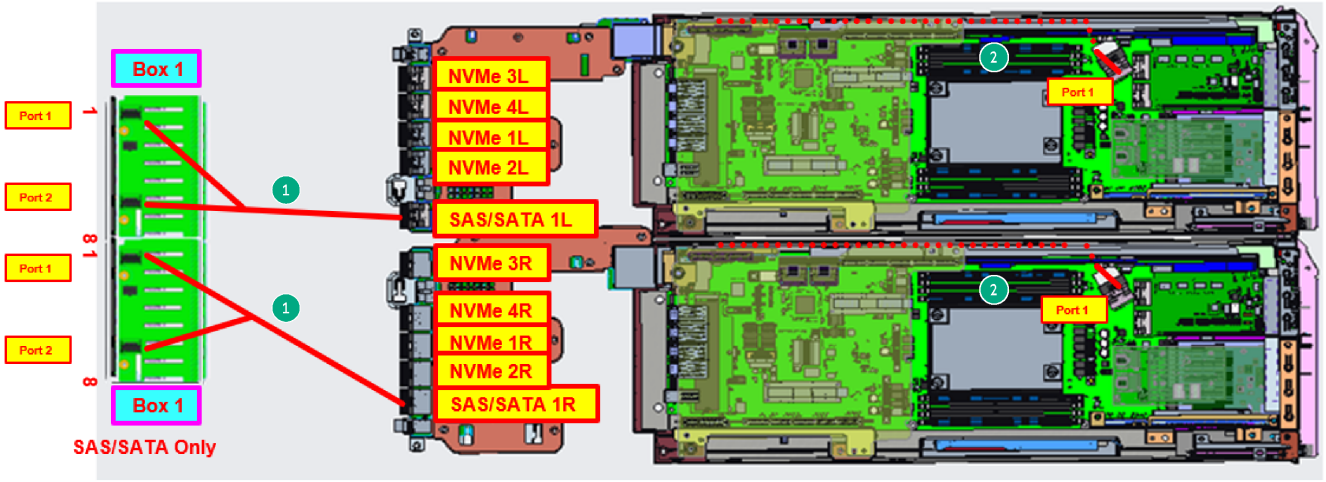

Cable PN	From	To	Color
P27271-002	Front panel pass through SAS/SATA 1L	SAS/SATA backplane port 1	Red (callout 1)
		SAS/SATA backplane port 2	
	Front panel pass through SAS/SATA 1R	SAS/SATA backplane port 1	
		SAS/SATA backplane port 2	
P28453-001	Half width MB port 1	MB storage interposer	Red dots (callout 2)

8 SAS/SATA (Smart Array) configuration cabling for chassis 1

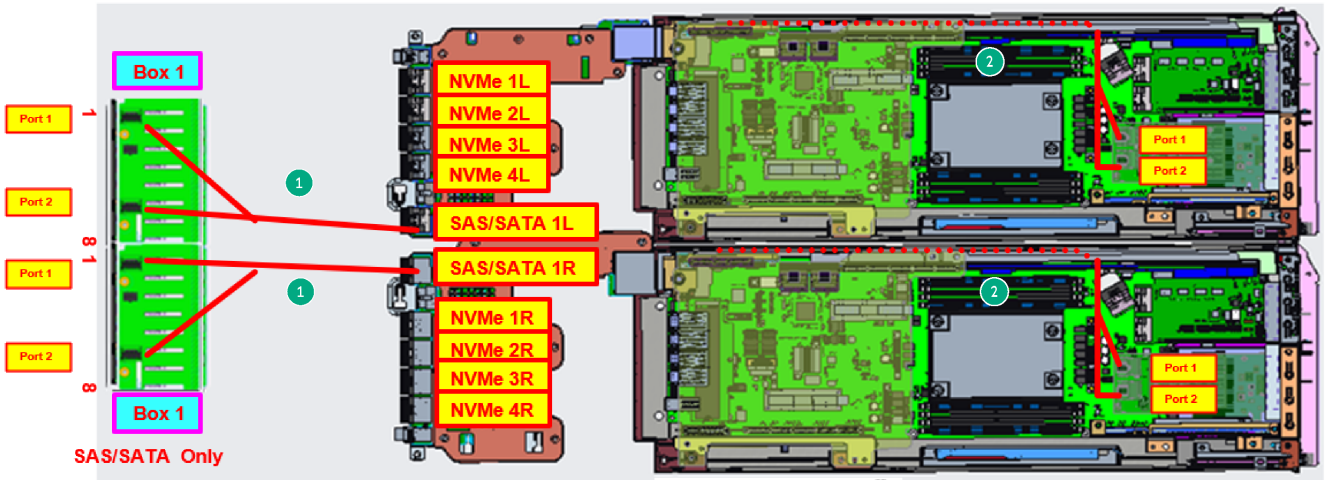

Cable PN	From	To	Color
P27271-002	Front panel pass through SAS/SATA 1L	SAS/SATA backplane port 1	Red (callout 1)
		SAS/SATA backplane port 2	
	Front panel pass through SAS/SATA 1R	SAS/SATA backplane port 1	
		SAS/SATA backplane port 2	
P28454-001	P408i-p/E208i-p port 1	MB storage interposer	Red line and dots (callout 2)
	P408i-p/E208i-p port 2		

8 SAS/SATA (Smart Array) configuration cabling for chassis 2

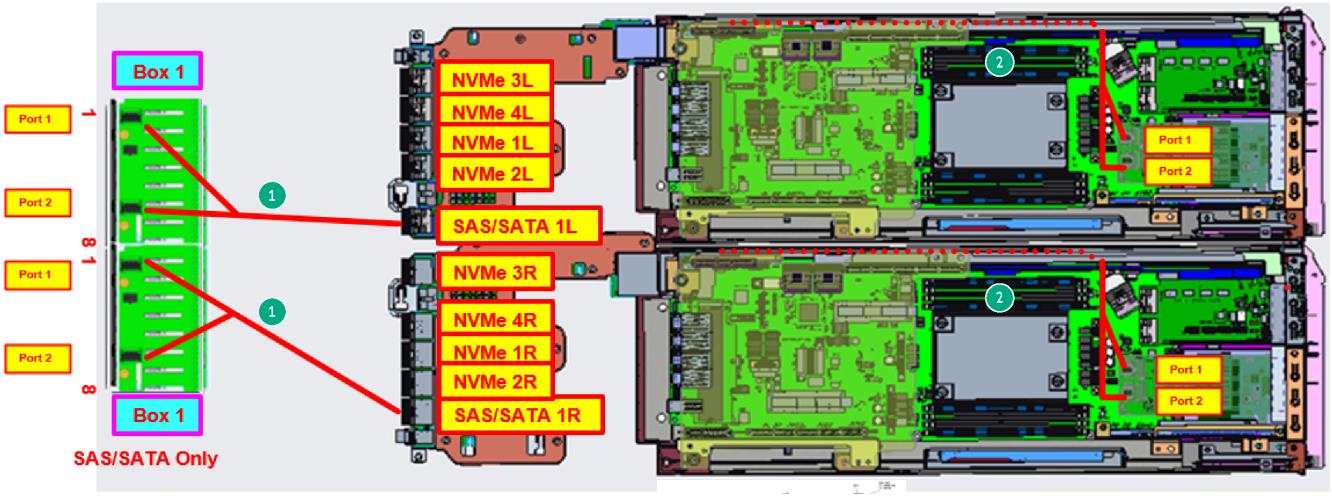

Cable PN	From	To	Color
P27271-002	Front panel pass through SAS/SATA 1L	SAS/SATA backplane port 1	Red (callout 1)
		SAS/SATA backplane port 2	
	Front panel pass through SAS/SATA 1R	SAS/SATA backplane port 1	
		SAS/SATA backplane port 2	
P28454-001	P408i-p/E208i-p port 1	MB storage interposer	Red line and dots (callout 2)
	P408i-p/E208i-p port 2		

8 + 8 embedded SATA configuration cabling

Supports up to 8 SFF drives per system board module.

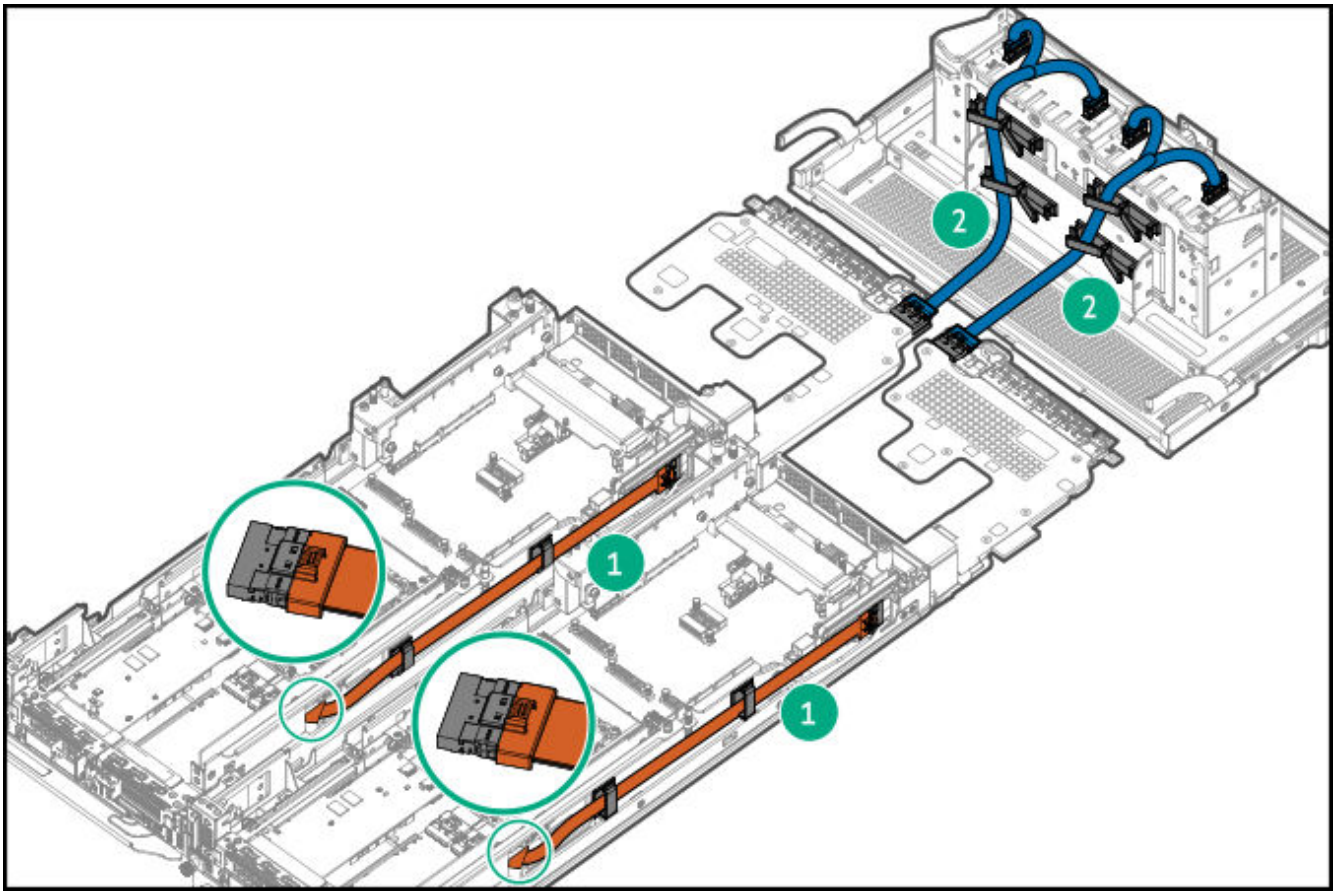

Item	Description
1	System Board to System Board Storage Interposer x 8 Slim SAS to x8 Slim SAS cable routing
2	Front Panel Pass-Thru Board to SAS/SATA Backplane x8 Slim SAS to (2x) x4 Mini SAS cable routing

8 + 8 SAS/SATA with E208i-p/P408i-p controller configuration cabling

Supports up to 8 SFF SAS/SATA drives per system board module.

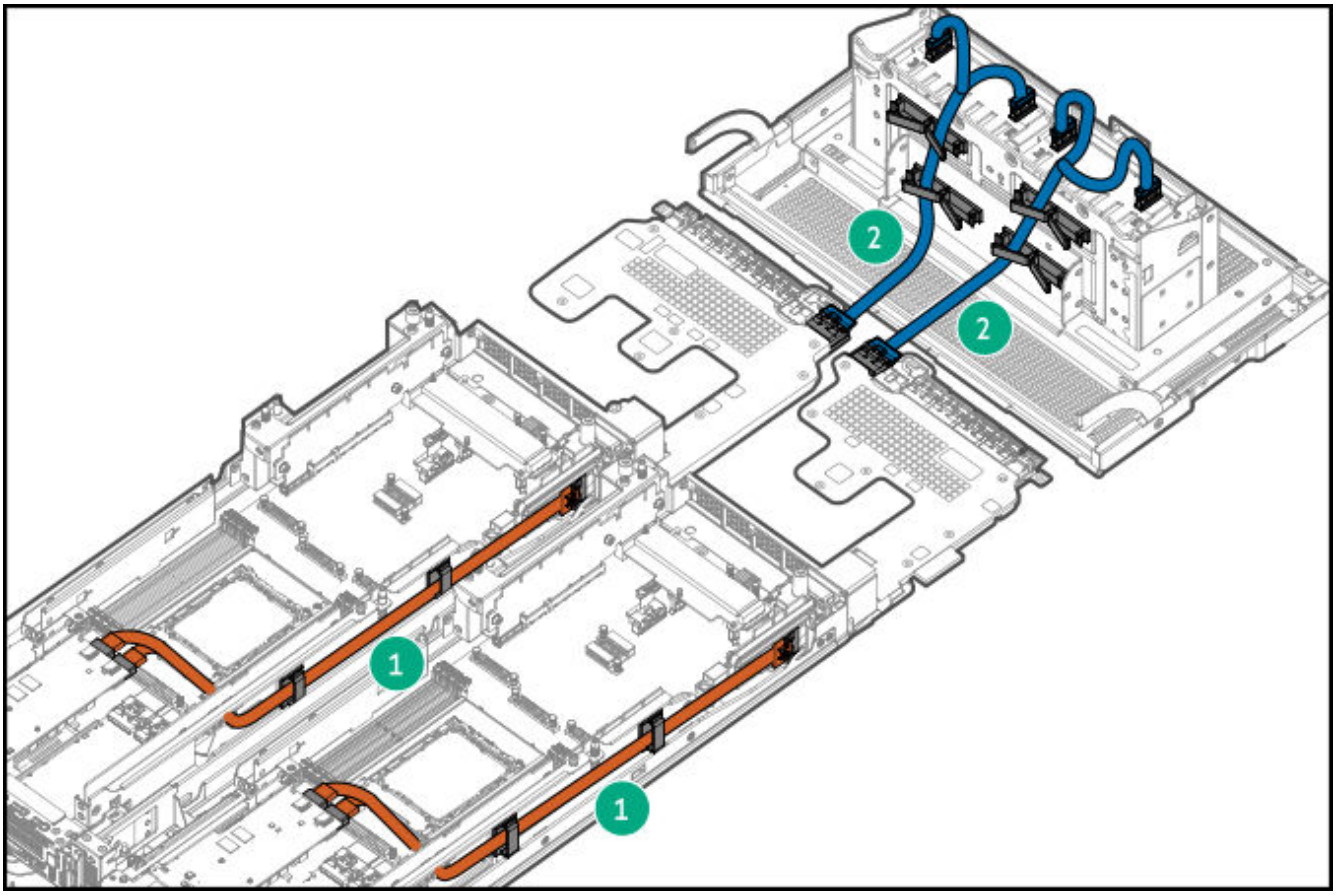

Item	Description
1	P408i-p/E208i-p to System Board Storage Interposer (2x) 4x Mini SAS to x8 Slim SAS cable routing
2	Front Panel Pass-Thru Board to Gen10 SAS/SATA Backplane x8 Slim SAS to (2x) x4 Mini SAS cable routing

SAS/SATA-NVMe configuration cabling

Subtopics

2 embedded SATA + 2 NVMe drive configuration cabling for chassis 1
2 embedded SATA + 2 NVMe drive configuration cabling for chassis 2
2 embedded SATA + 6 NVMe configuration cabling for chassis 1
2 embedded SATA + 6 NVMe configuration cabling for chassis 2
2 SAS/SATA + 4 NVMe configuration cabling for chassis 2
2 SAS/SATA + 2 NVMe wtih E208i-p/P408i-p configuration cabling for chassis 1

2 SAS/SATA + 2 NVMe wtih E208i-p/P408i-p configuration cabling for chassis 2
8 NVMe configuration cabling for chassis 2

2 embedded SATA + 2 NVMe drive configuration cabling for chassis 1

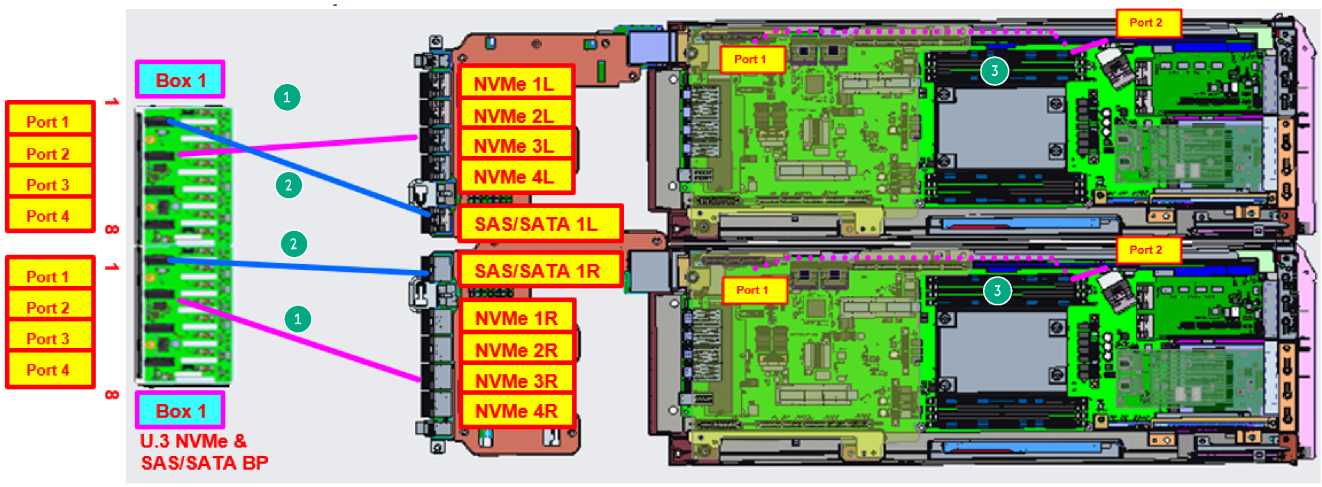

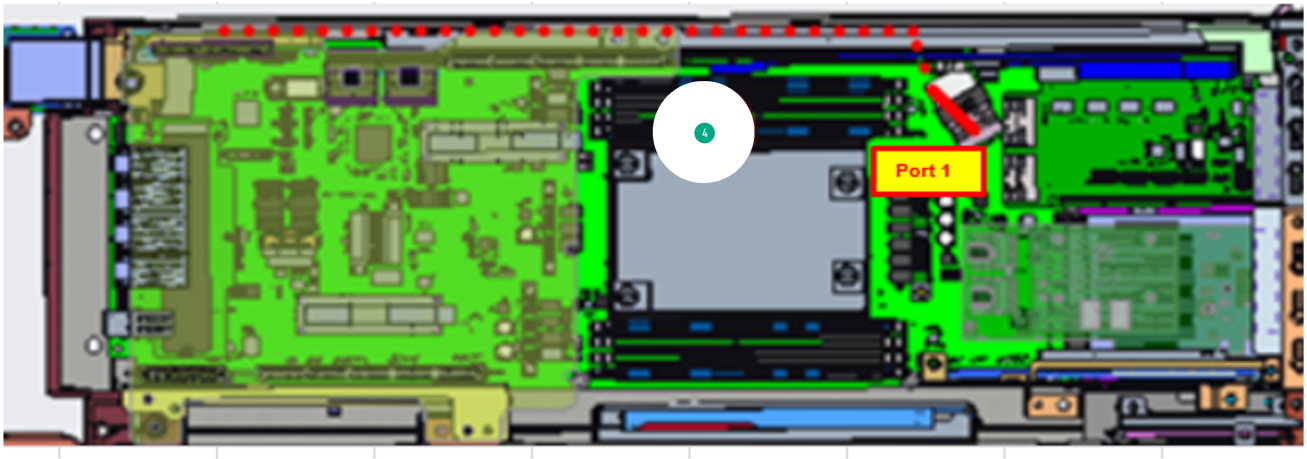

Cable PN	From	To	Color
P27273-002	Front panel pass through NVMe 3L	U.3 premium backplane s hort port 2	Pink (callout 1)
	Front panel pass through NVMe 3R	U.3 premium backplane s hort port 2	

Cable PN	From	To	Color
P35511-001	Front panel pass through SAS/SATA 1L	U.3 premium backplane s hort port 1	Blue (callout 2)
	Front panel pass through SAS/SATA 1R	U.3 premium backplane s hort port 1	
P28450-002	Primary riser port 2	Midplane interposer port 1	Pink dots (callout 3)
P28453-001	Half width MB port 1	MB storage interposer	Red dots (callout 4)

2 embedded SATA + 2 NVMe drive configuration cabling for chassis 2

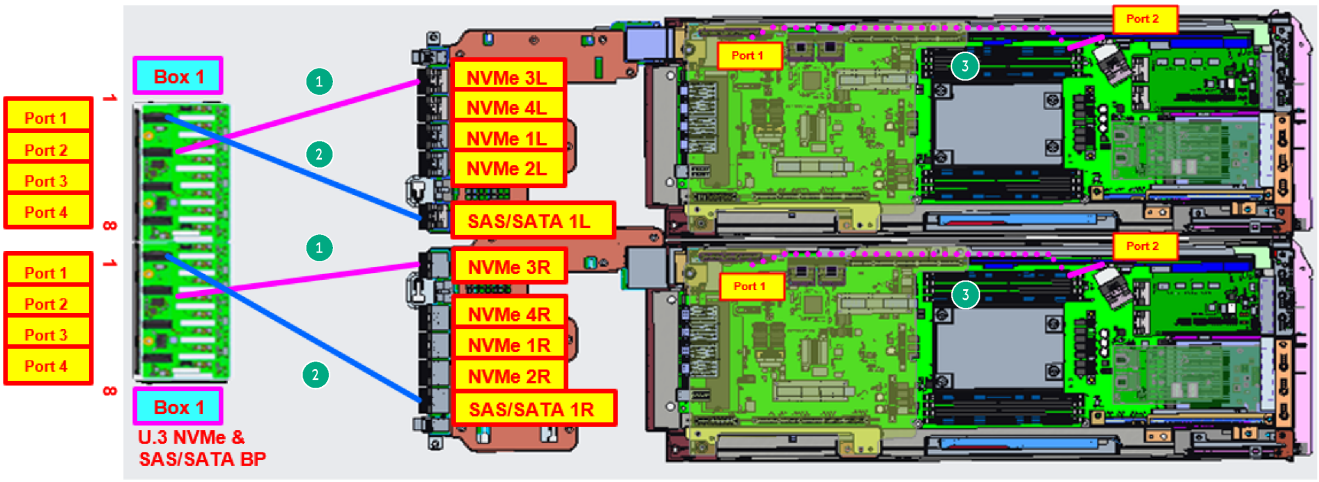

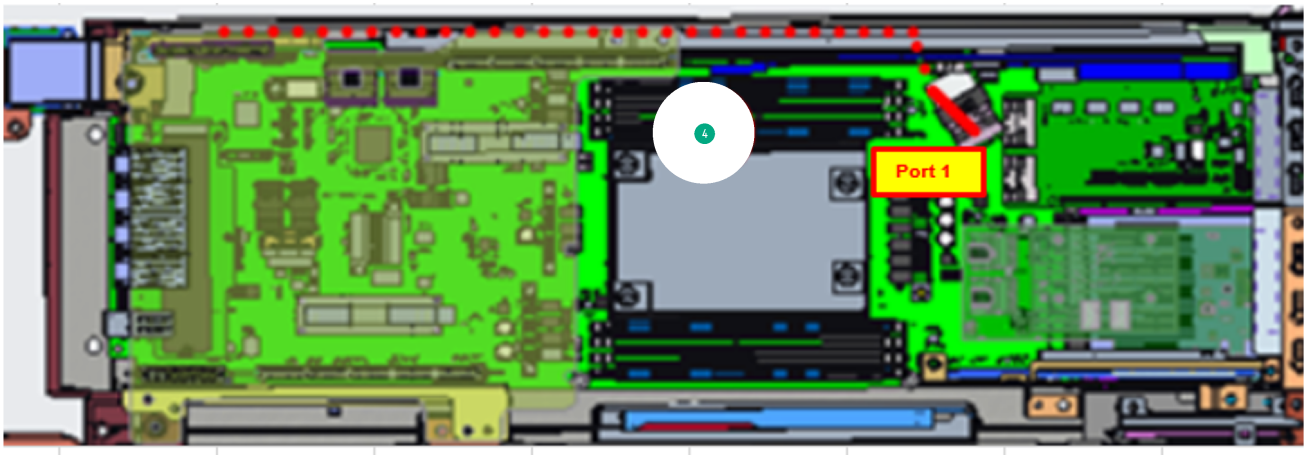

Cable PN	From	To	Color
P27273-002	Front panel pass through NVMe 3L	U.3 premium backplane s hort port 2	Pink (callout 1)
	Front panel pass through NVMe 3R	U.3 premium backplane s hort port 2	
P35511-001	Front panel pass through SAS/SATA 1L	U.3 premium backplane s hort port 1	Blue (callout 2)
	Front panel pass through SAS/SATA 1R	U.3 premium backplane s hort port 1	
P28450-002	Primary riser port 2	Midplane interposer port 1	Pink dots (callout 3)
P28453-001	Half width MB port 1	MB storage interposer	Red dots (callout 4)

2 embedded SATA + 6 NVMe configuration cabling for chassis 1

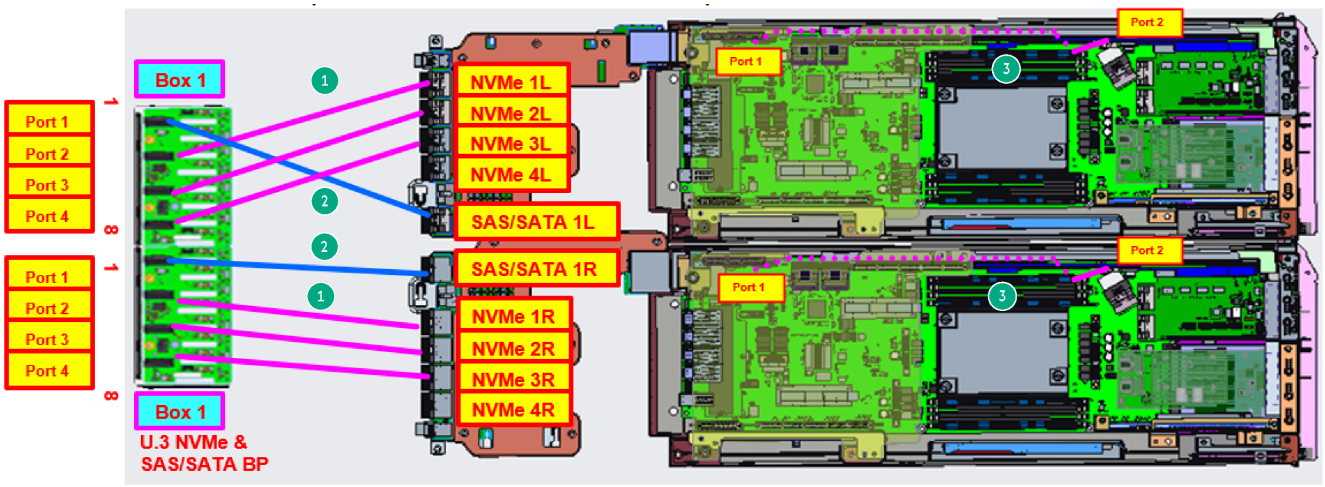

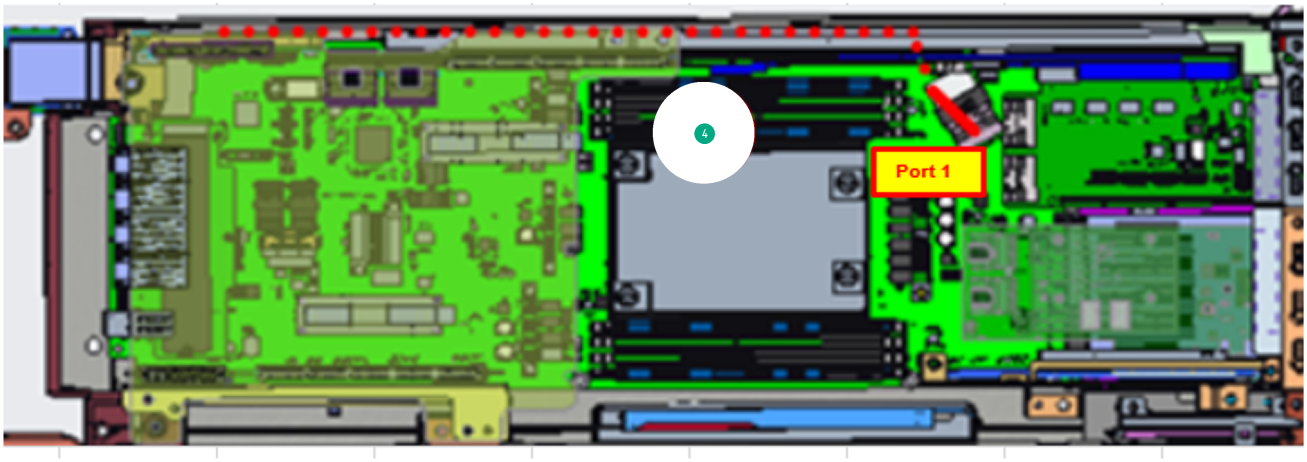

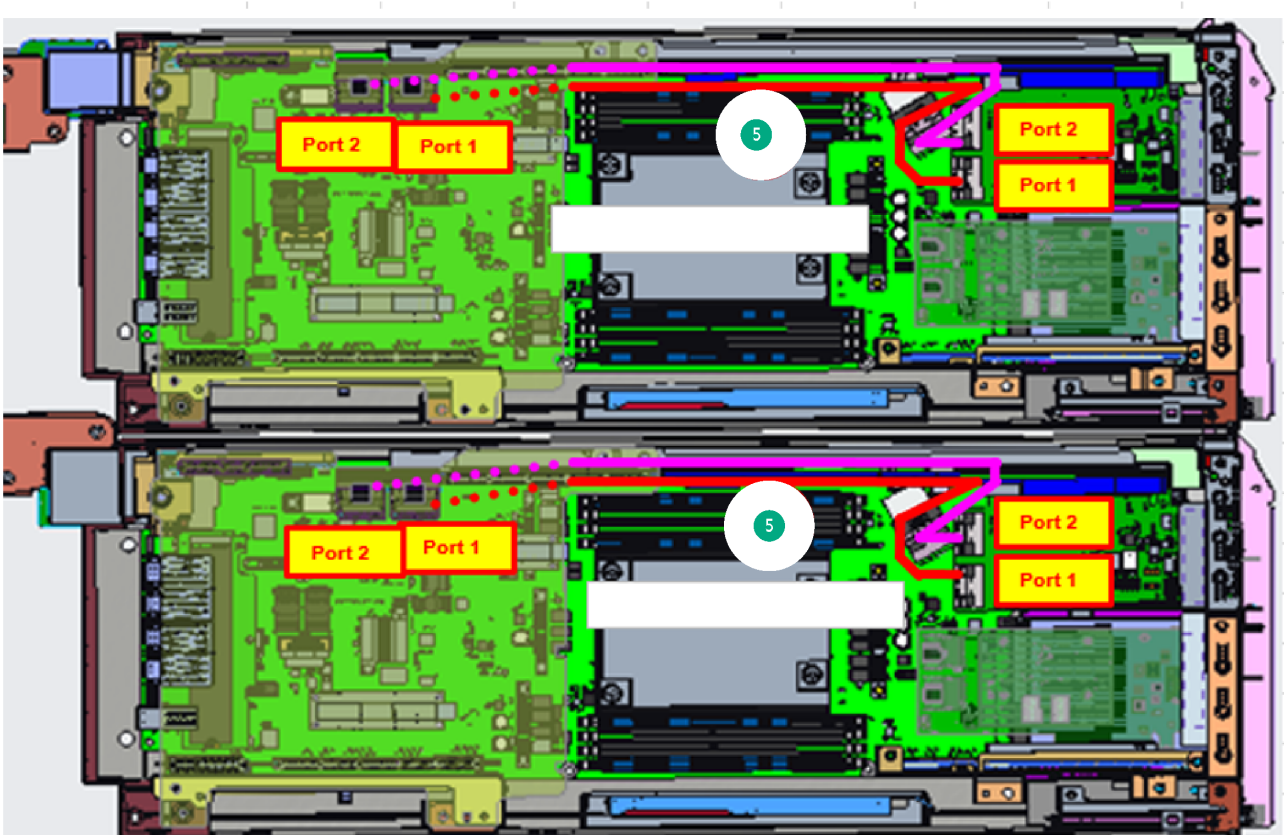

Cable PN	From	To	Color
P27273-002	Front panel pass through NVMe 1L	U.3 premium backplane s hort port 2	Pink (callout 1)
	Front panel pass through NVMe 2L	U.3 premium backplane s hort port 3	

Cable PN	From	To	Color
	Front panel pass through NVMe 3L	U.3 premium backplane s hort port 4	
	Front panel pass through NVMe 1R	U.3 premium backplane s hort port 2	
	Front panel pass through NVMe 2R	U.3 premium backplane s hort port 3	
	Front panel pass through NVMe 3R	U.3 premium backplane s hort port 4	
P35511-001	Front panel pass through SAS/SATA 1L	U.3 premium backplane s hort port 1	Blue (callout 2)
	Front panel pass through SAS/SATA 1R	U.3 premium backplane s hort port 1	
P28450-002	Primary riser port 2	Midplane interposer port 1	Pink dots (callout 3)
P28453-001	Half width MB port 1	MB storage interposer	Red dots (callout 4)
P28449-001	NVMe retimer port 1	MB storage interposer po rt 1	Red line and dots (callout 5)
	NVMe retimer port 2	MB storage interposer po rt 2	Pink line and dot (callout 5)

2 embedded SATA + 6 NVMe configuration cabling for chassis 2

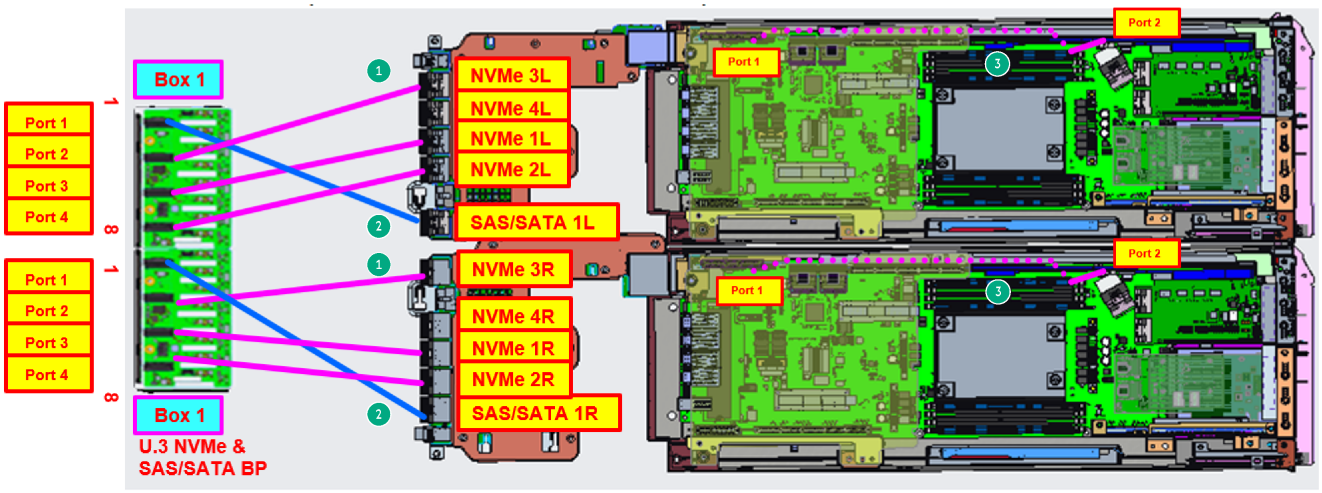

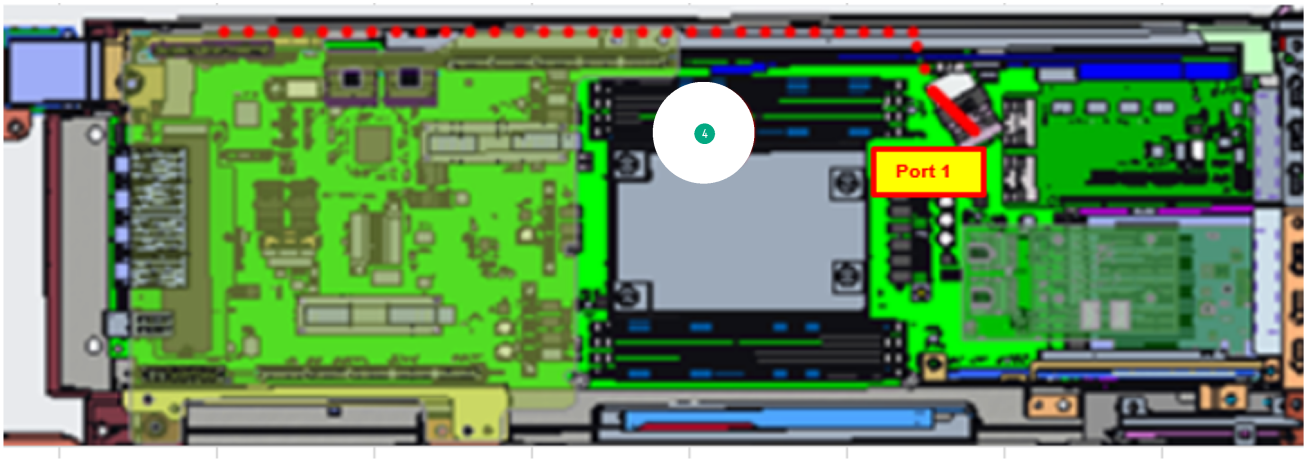

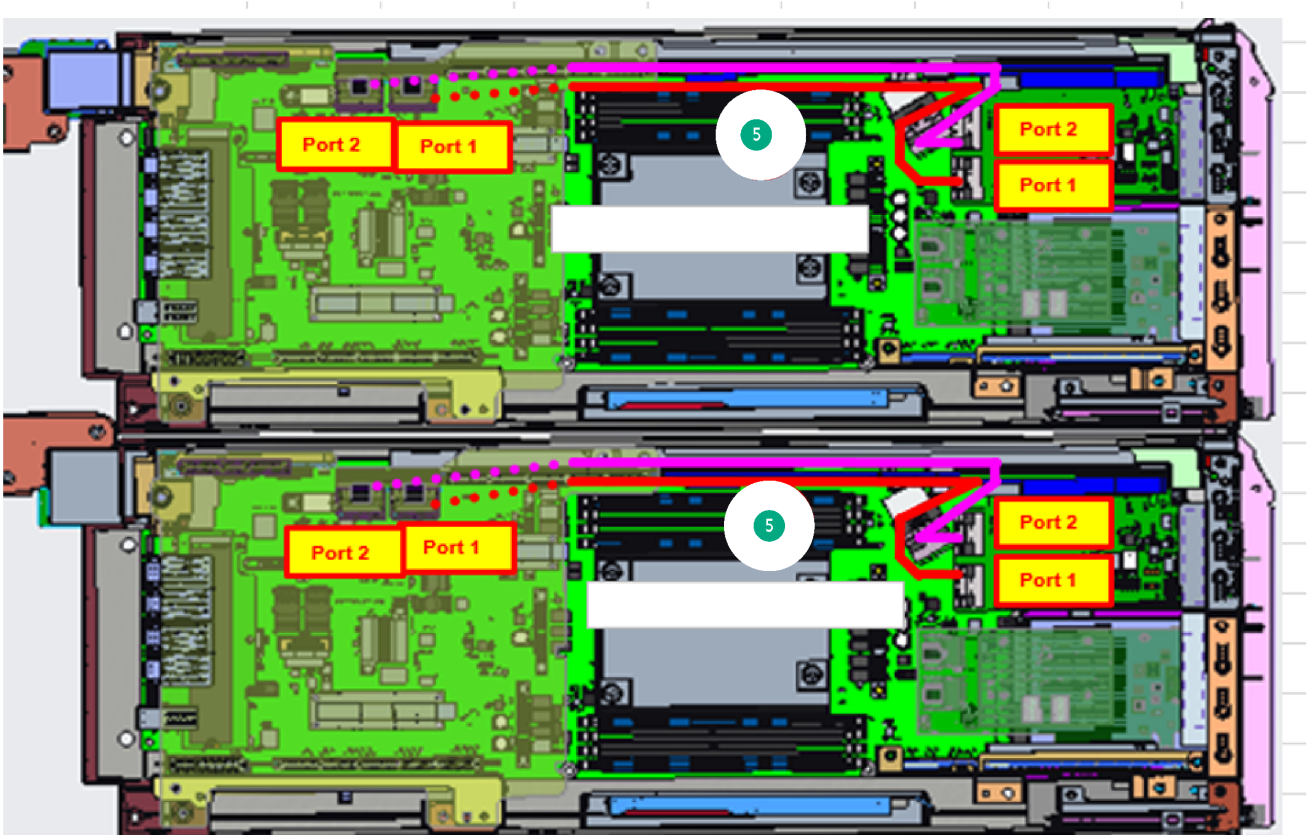

Cable PN	From	To	Color
P27273-002	Front panel pass through NVMe 3L	U.3 premium backplane s hort port 2	Pink (callout 1)
	Front panel pass through NVMe 1L	U.3 premium backplane s hort port 3	

Cable PN	From	To	Color
	Front panel pass through NVMe 2L	U.3 premium backplane s hort port 4	
	Front panel pass through NVMe 3R	U.3 premium backplane s hort port 2	
	Front panel pass through NVMe 1R	U.3 premium backplane s hort port 3	
	Front panel pass through NVMe 2R	U.3 premium backplane s hort port 4	
P35511-001	Front panel pass through SAS/SATA 1L	U.3 premium backplane s hort port 1	Blue (callout 2)
	Front panel pass through SAS/SATA 1R	U.3 premium backplane s hort port 1	
P28450-002	Primary riser port 2	Midplane interposer port 1	Pink dots (callout 3)
P28453-001	Half width MB port 1	MB storage interposer	Red dots (callout 4)
P28449-001	NVMe retimer port 1	MB storage interposer po rt 1	Red line and dots (callout 5)
	NVMe retimer port 2	MB storage interposer po rt 2	Pink line and dot (callout 5)

2 SAS/SATA + 4 NVMe configuration cabling for chassis 2

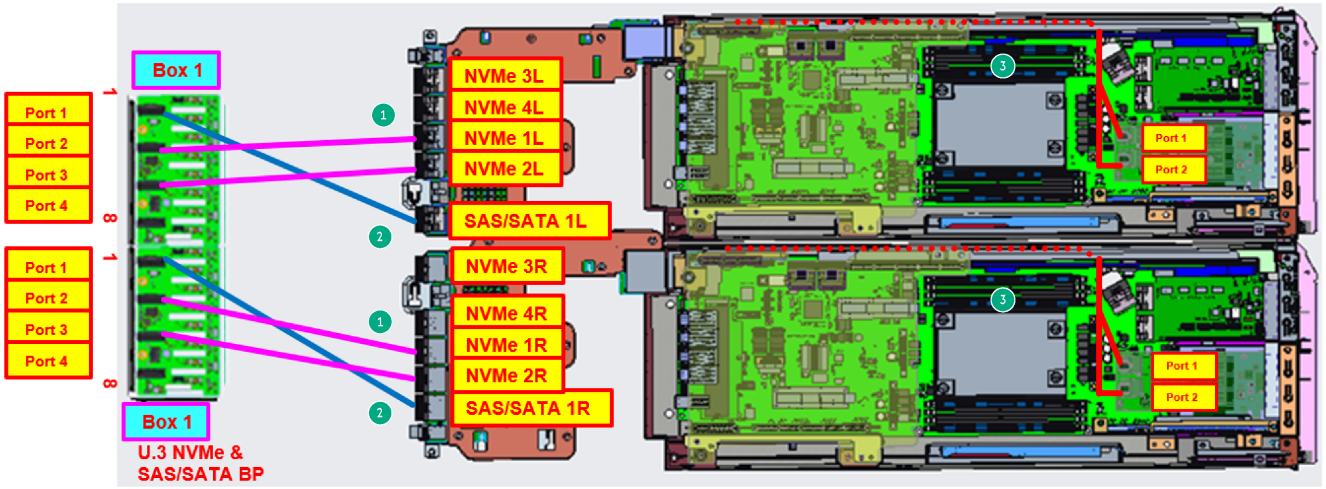

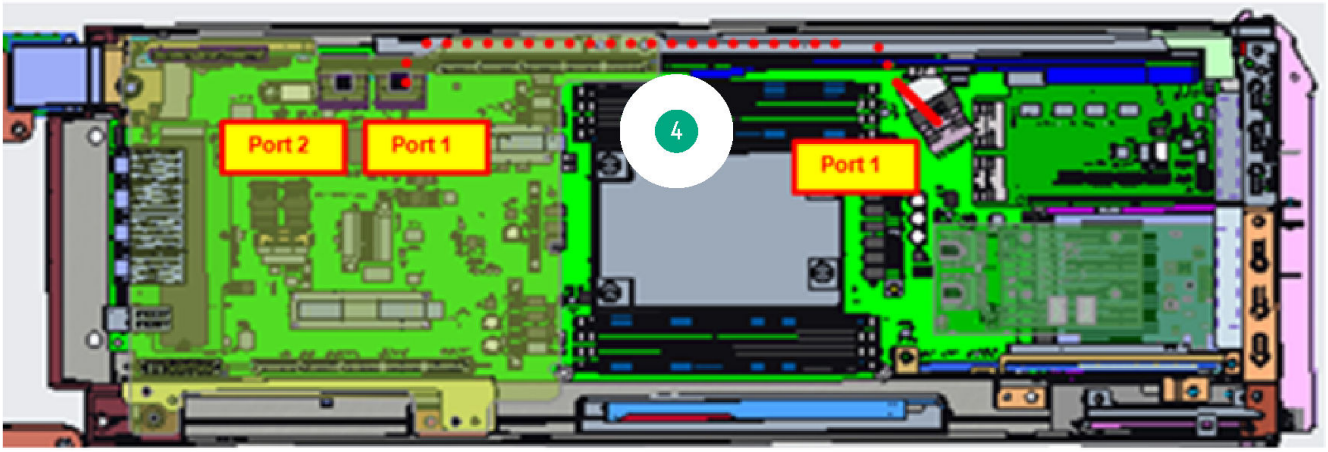

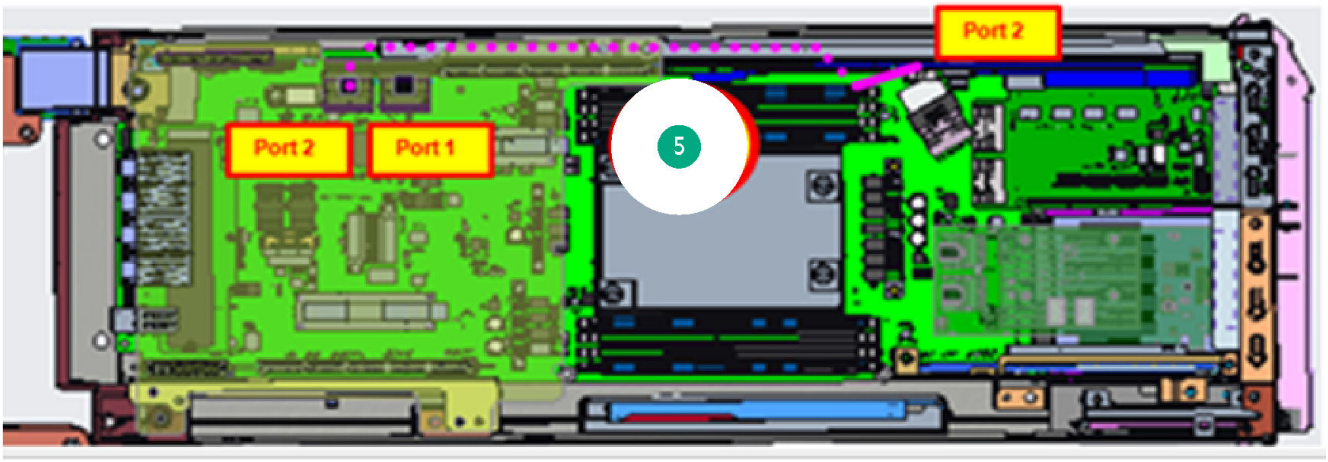

Cable PN	From	To	Color
P27273-002	Front panel pass through NVMe 1L	U.3 premium backplane short port 2	Pink (callout 1)
	Front panel pass through NVMe 2L	U.3 premium backplane short port 3	
	Front panel pass through NVMe 1R	U.3 premium backplane short port 2	
	Front panel pass through NVMe 2R	U.3 premium backplane short port 3	
P43011-001	Front panel pass through SAS/SATA 1L	U.3 premium backplane short port 1	Blue (callout 2)
	Front panel pass through SAS/SATA 1R	U.3 premium backplane short port 1	

Cable PN	From	To	Color
P28454-001	P408i-p/E208i-p port 1	MB storage interposer	Red line and dots (callout 3)
	P408i-p/E208i-p port 2		
P28450-001	Half width MB port 1	Midplane interposer port 1	Red dots (callout 4)
P28450-002	Primary riser port 2	Midplane interposer port 2	Pink dot (callout 5)

2 SAS/SATA + 2 NVMe wtih E208i-p/P408i-p configuration cabling for chassis 1

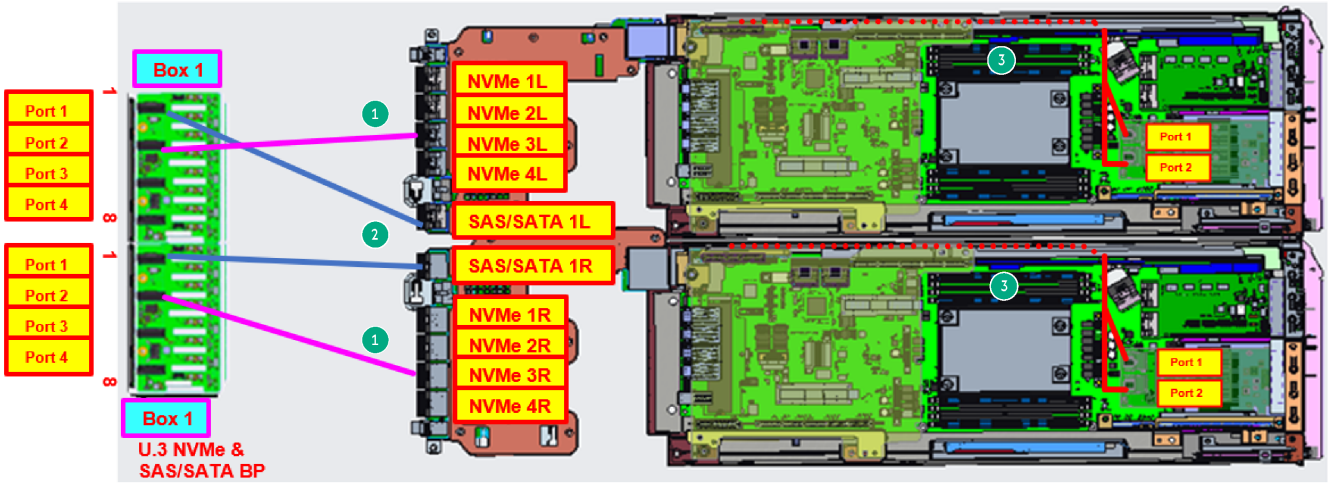

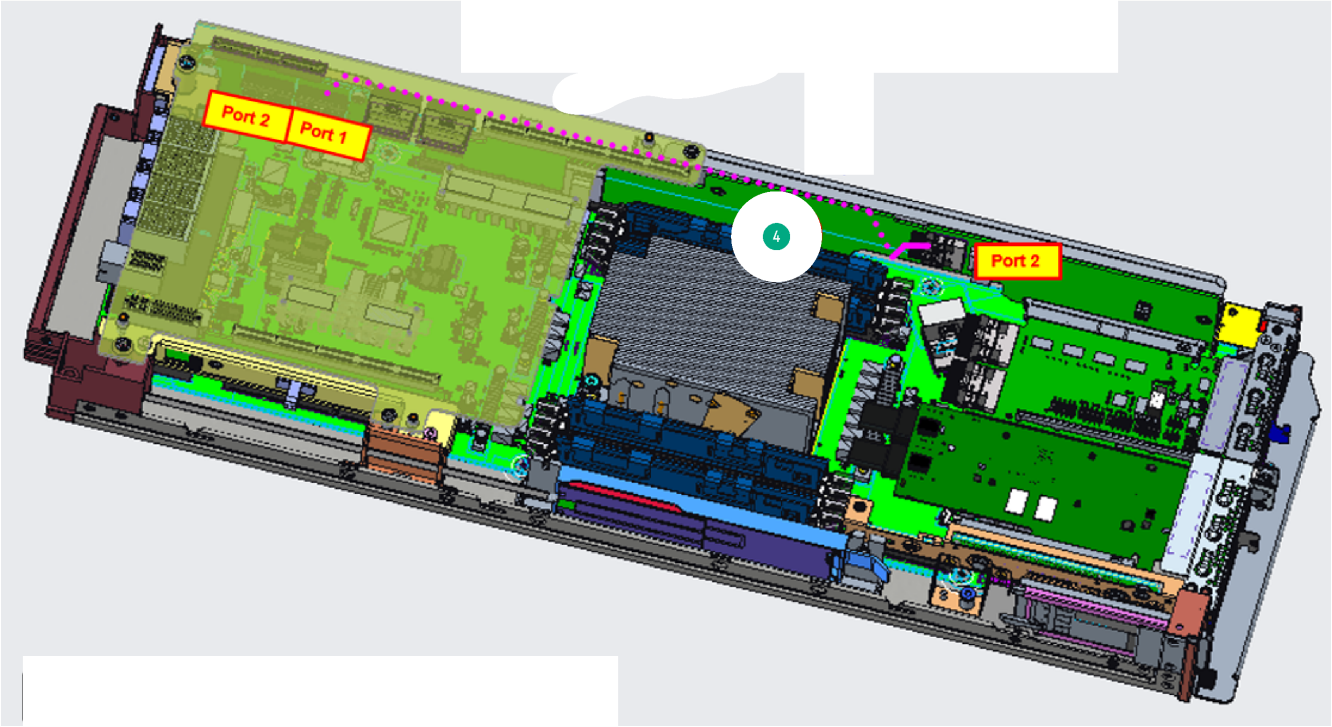

Cable PN	From	To	Color
P27273-002	Front panel pass through NVMe 3L	U.3 premium backplane s hort port 2	Pink (callout 1)
	Front panel pass through NVMe 3R	U.3 premium backplane s hort port 2	
P43011-001	Front panel pass through SAS/SATA 1L	U.3 premium backplane s hort port 1	Blue (callout 2)
	Front panel pass through SAS/SATA 1R	U.3 premium backplane s hort port 1	
P28454-001	P408i-p/E208i-p port 1	MB storage interposer	Red line and dots (callout 3)
	P408i-p/E208i-p port 2		
P28450-002	Primary riser port 2	Midplane interposer port 1	Pink dot (callout 4)

2 SAS/SATA + 2 NVMe wtih E208i-p/P408i-p configuration cabling for chassis 2

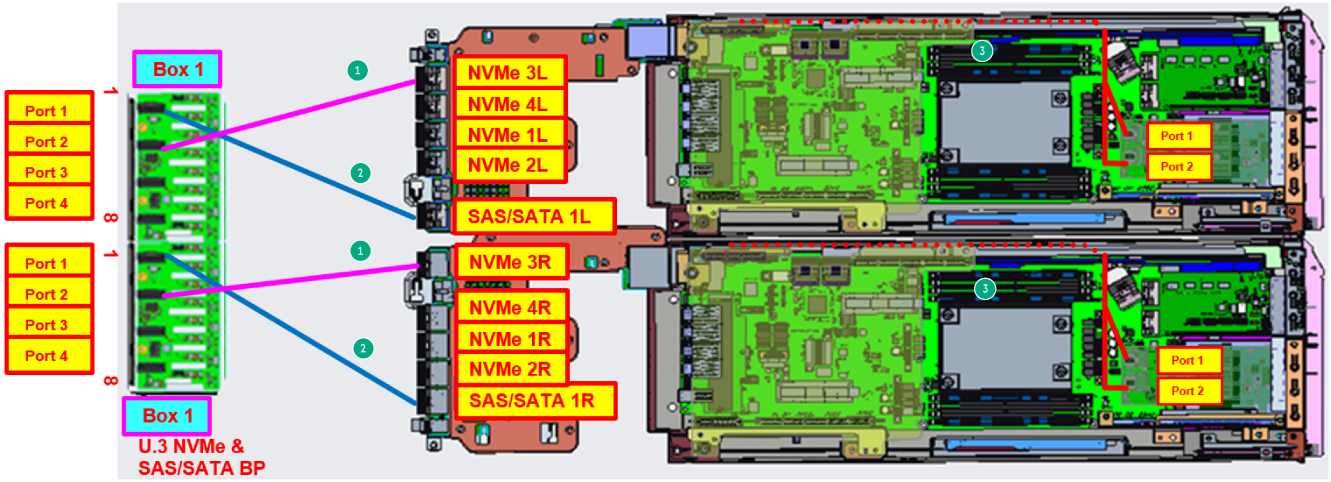

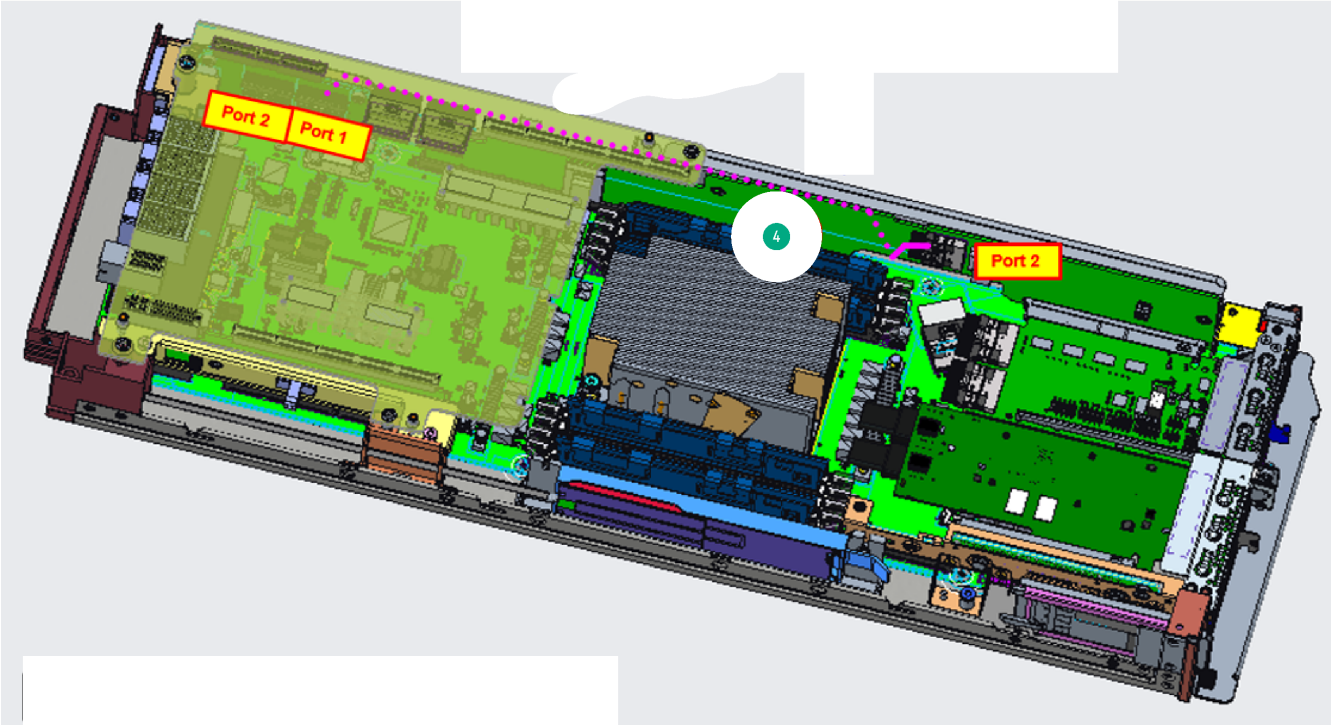

Cable PN	From	To	Color
P27273-002	Front panel pass through NVMe 3L	U.3 premium backplane s hort port 2	Pink (callout 1)
	Front panel pass through NVMe 3R	U.3 premium backplane s hort port 2	
P43011-001	Front panel pass through SAS/SATA 1L	U.3 premium backplane s hort port 1	Blue (callout 2)
	Front panel pass through SAS/SATA 1R	U.3 premium backplane s hort port 1	

Cable PN	From	To	Color
P28454-001	P408i-p/E208i-p port 1	MB storage interposer	Red line and dots (callout 3)
	P408i-p/E208i-p port 2		
P28450-002	Primary riser port 2	Midplane interposer port 1	Pink dot (callout 4)

8 NVMe configuration cabling for chassis 2

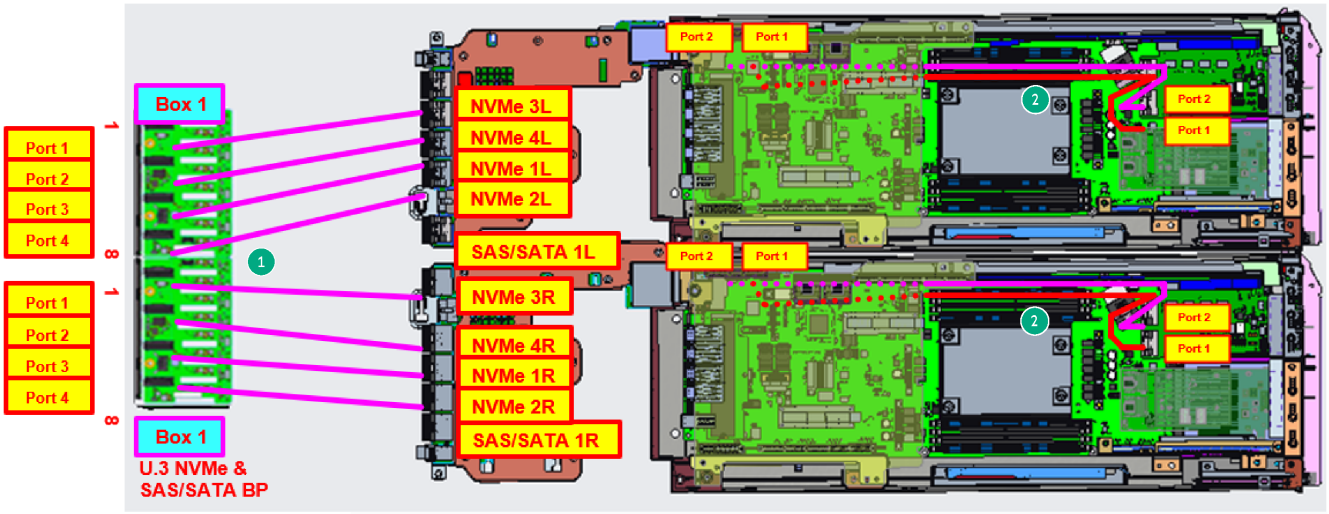

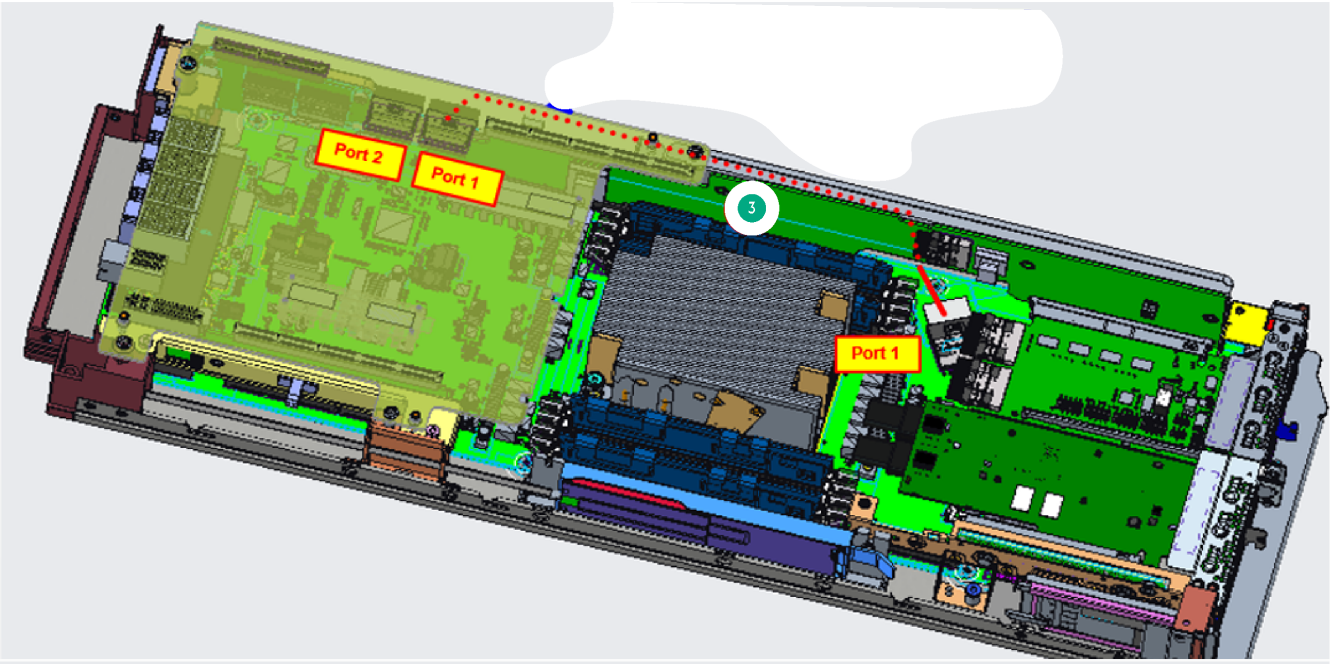

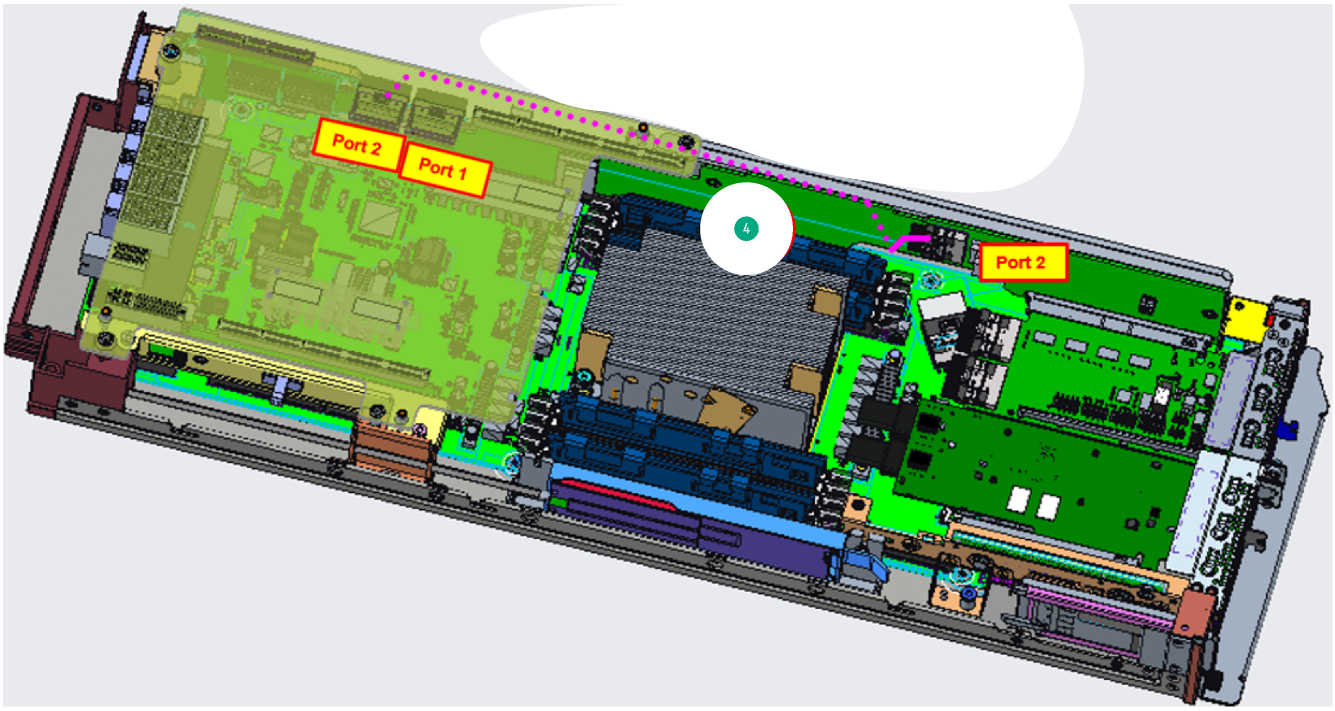

Cable PN	From	To	Color
P27273-002	Front panel pass through NVMe 3L	U.3 premium backplane short port 1	Pink (callout 1)
	Front panel pass through NVMe 4L	U.3 premium backplane short port 2	
	Front panel pass through NVMe 1L	U.3 premium backplane short port 3	
	Front panel pass through NVMe 2L	U.3 premium backplane short port 4	
	Front panel pass through NVMe 3R	U.3 premium backplane short port 1	
	Front panel pass through NVMe 4R	U.3 premium backplane short port 2	
	Front panel pass through NVMe 1R	U.3 premium backplane short port 3	
	Front panel pass through NVMe 2R	U.3 premium backplane short port 4	
P28449-001	NVMe retimer port 1	MB storage interposer port 1	Red line and dots (callout 2)

Cable PN	From	To	Color
	NVMe retimer port 2	MB storage interposer port 2	Pink line and dot (callout 2)
P28450-001	Half width MB port 1	Midplane interposer port 1	Red dots (callout 3)
P28450-002	Primary riser port 2	Midplane interposer port 2	Pink dot (callout 4)

HPE NS204i-t Gen10 Plus NVMe Boot Controller -M.2 SSD module cabling

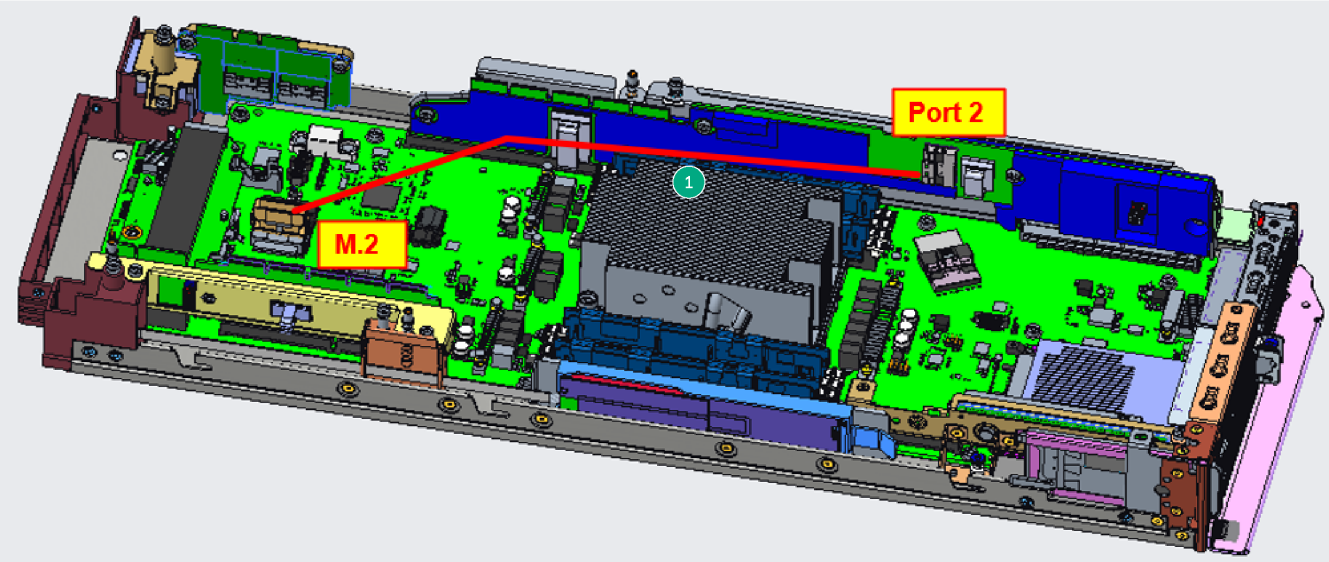

Cable PN	From	To	Color
P28448-001	Secondary riser port 2	Half-width M.2 connector	Red (callout 1)

2 NVMe + M.2 configuration cabling for chassis 1

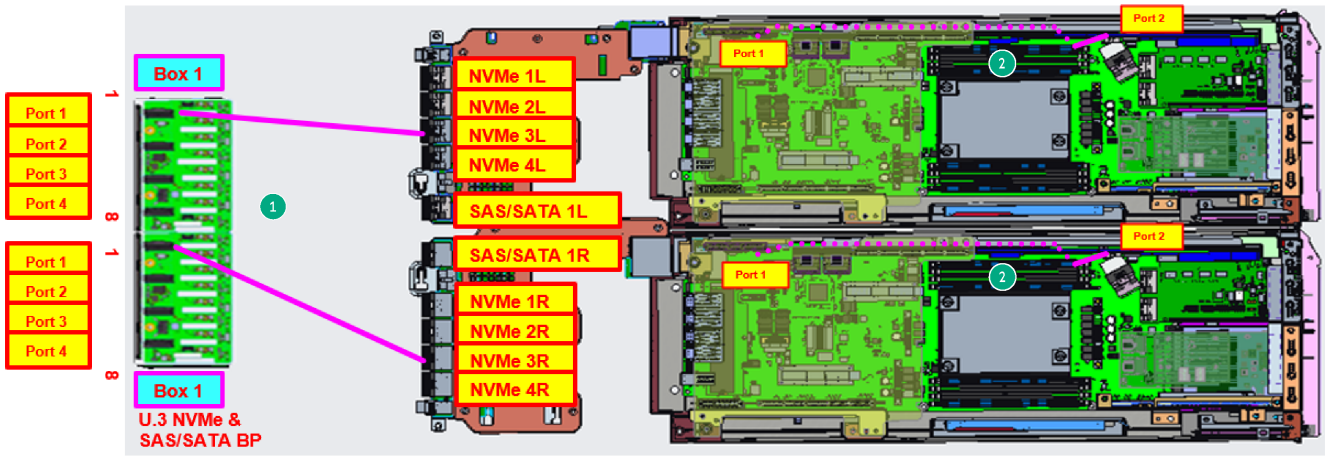

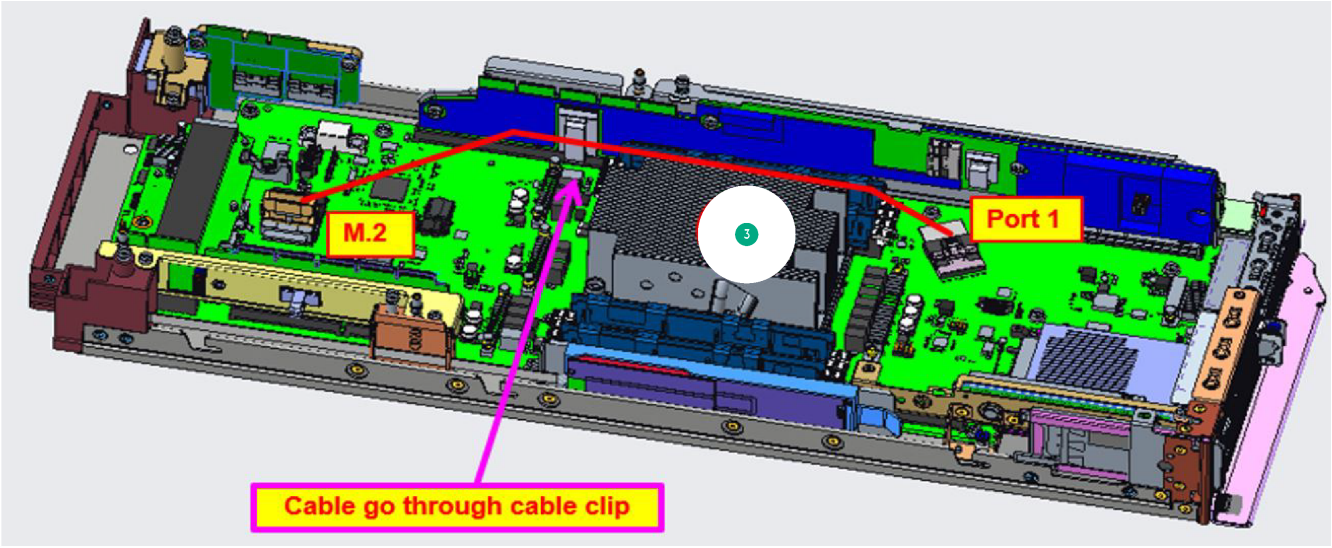

Cable PN	From	To	Color
P27273-002	Front panel pass through NVMe 3L	U.3 premium backplane s hort port 1	Pink (callout 1)
	Front panel pass through NVMe 3R	U.3 premium backplane s hort port 1	
P28450-002	Primary riser port 2	Midplane interposer port 1	Pink dot (callout 2)
P45750-001	Half-width MB port 1	Half-width M.2 connector	Red (callout 3)

2 NVMe + M.2 configuration cabling for chassis 2

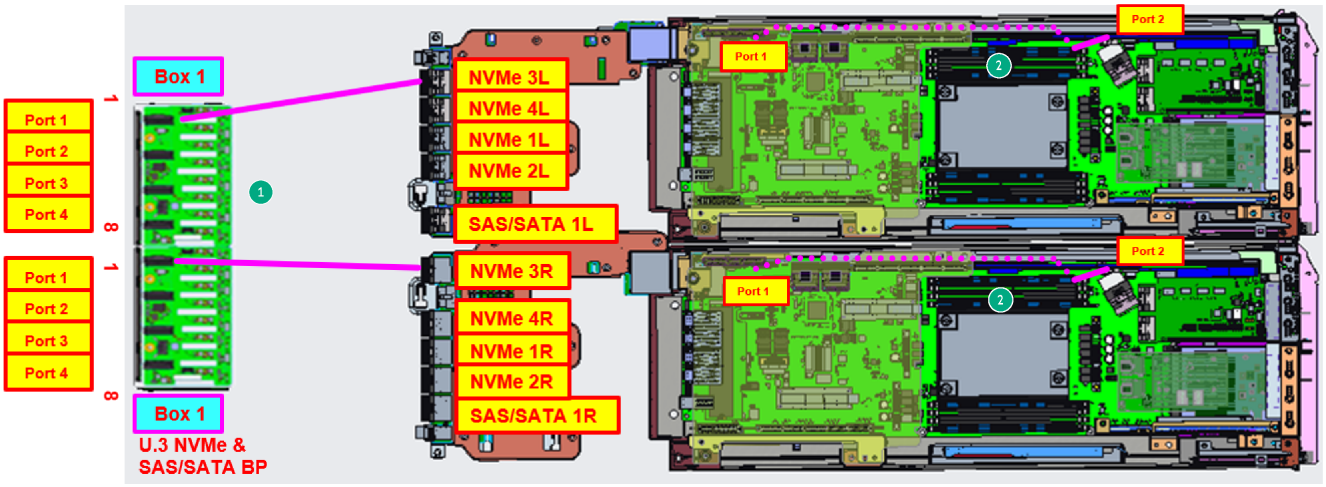

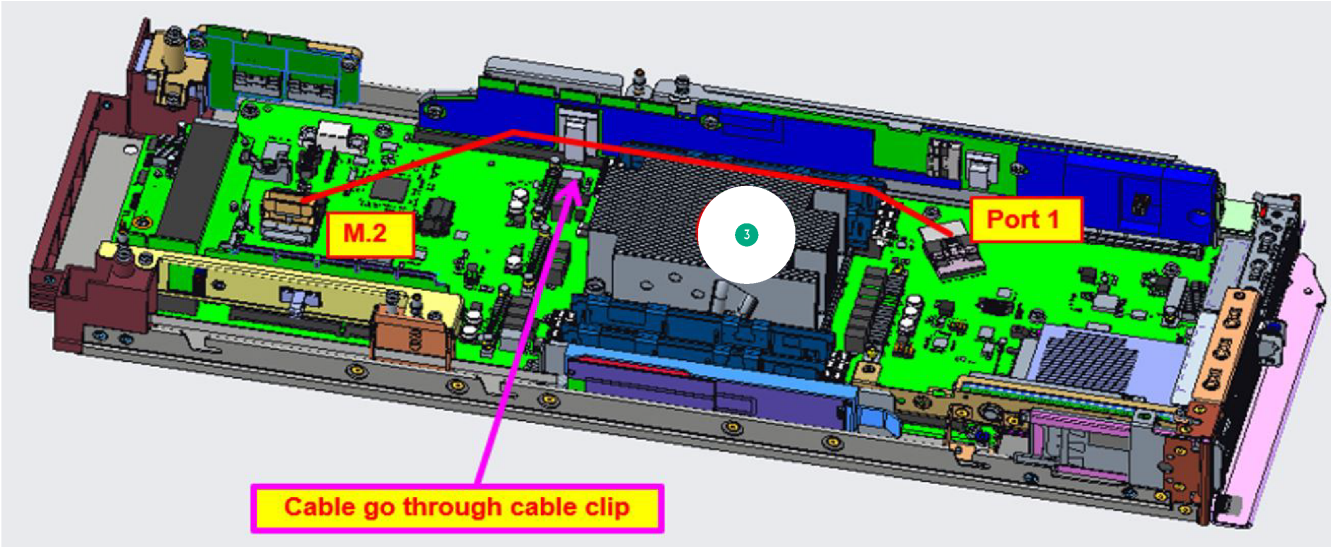

Cable PN	From	To	Color
P27273-002	Front panel pass through NVMe 3L	U.3 premium backplane s hort port 1	Pink (callout 1)
	Front panel pass through NVMe 3R	U.3 premium backplane s hort port 1	
P28450-002	Primary riser port 2	Midplane interposer port 1	Pink dot (callout 2)
P45750-001	Half-width MB port 1	Half-width M.2 connector	Red (callout 3)

6 NVMe + M.2 configuration cabling for chassis 2

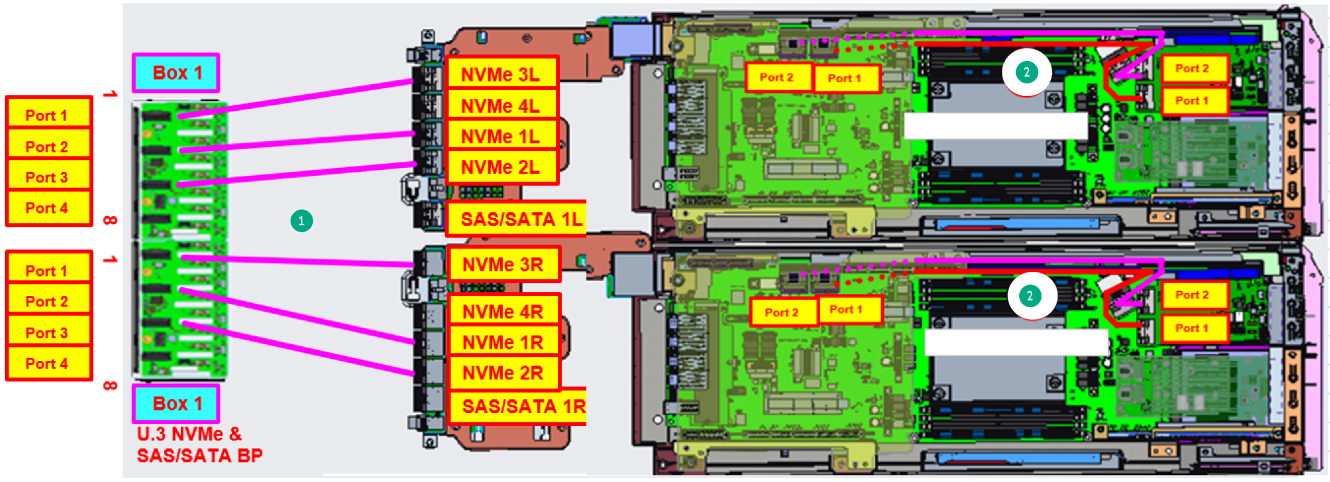

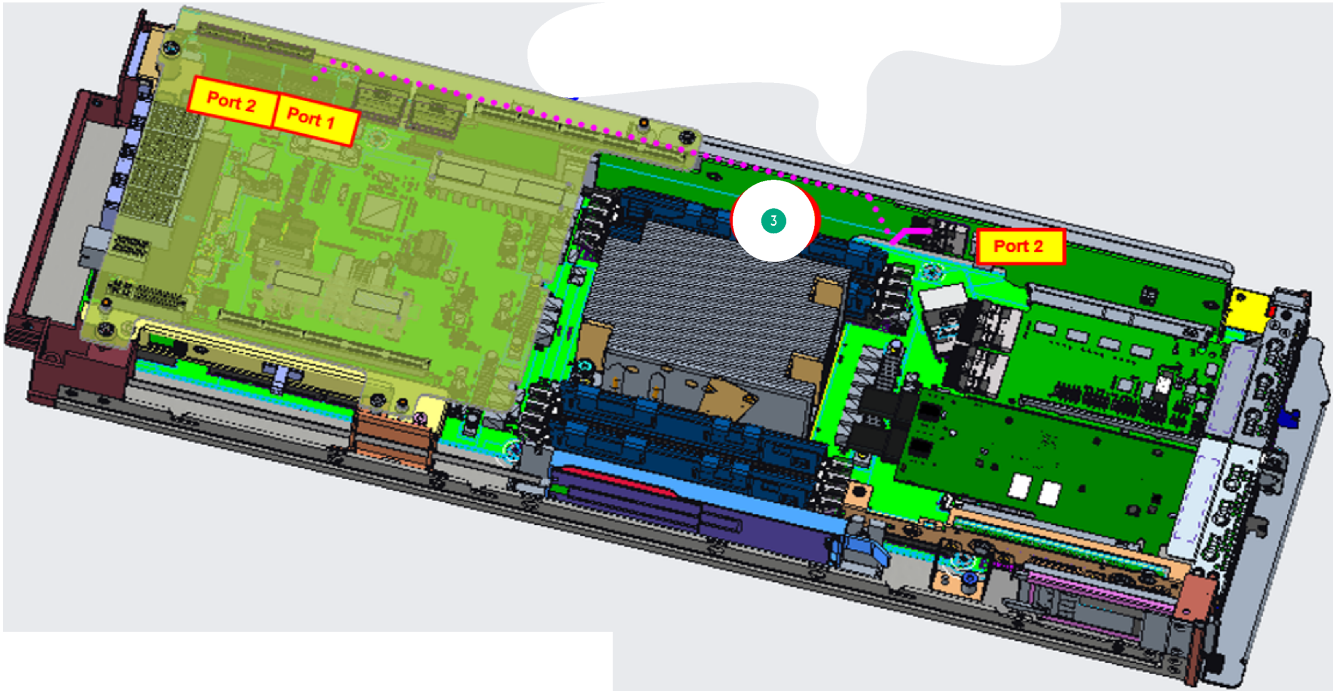

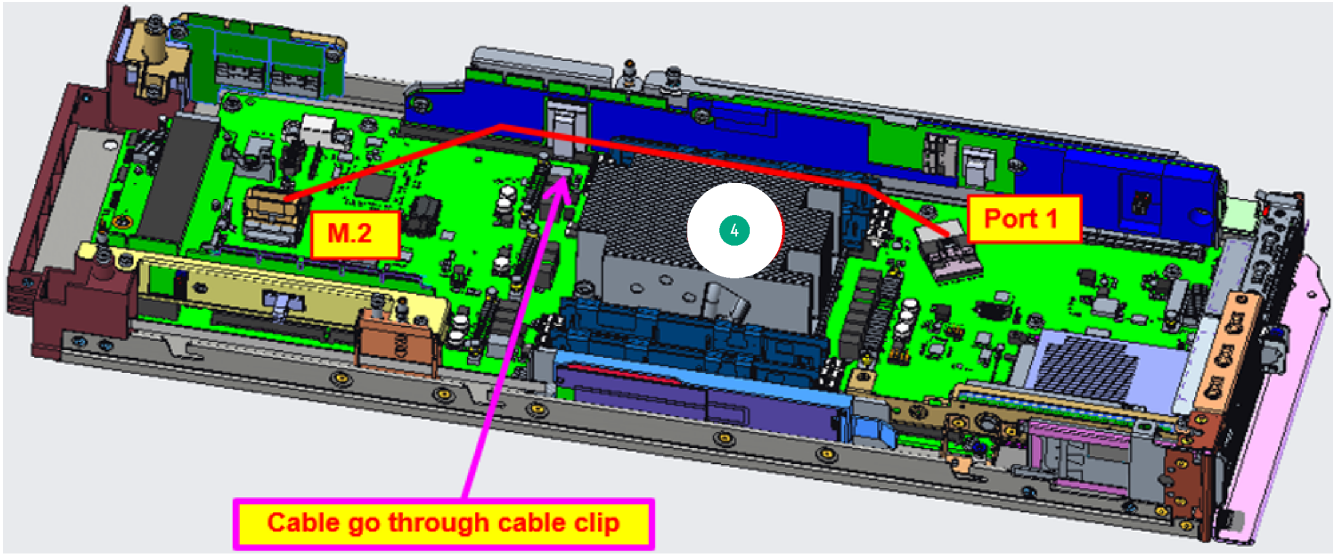

Cable PN	From	To	Color
P27273-002	Front panel pass through NVMe 3L	U.3 premium backplane short port 1	Pink (callout 1)
	Front panel pass through NVMe 1L	U.3 premium backplane short port 2	
	Front panel pass through NVMe 2L	U.3 premium backplane short port 3	
	Front panel pass through NVMe 3R	U.3 premium backplane short port 1	
	Front panel pass through NVMe 1R	U.3 premium backplane short port 2	
	Front panel pass through NVMe 2R	U.3 premium backplane short port 3	
P28449-001	NVMe retimer port 1	MB storage interposer port 1	Red line and dots (callout 2)
	NVMe retimer port 2	MB storage interposer port 2	Pink line and dot (callout 2)
P28450-002	Primary riser port 2	Midplane interposer port 1	Pink dot (callout 3)
P45750-001	Half-width MB port 1	Half-width M.2 connector	Red (callout 4)

HPE Smart Storage Battery cabling

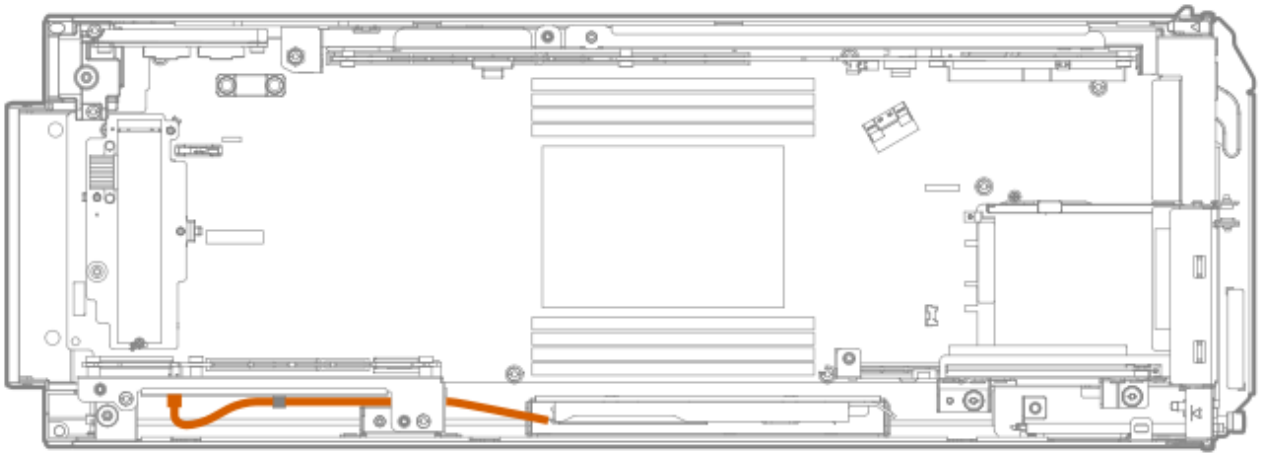

Power switch cabling

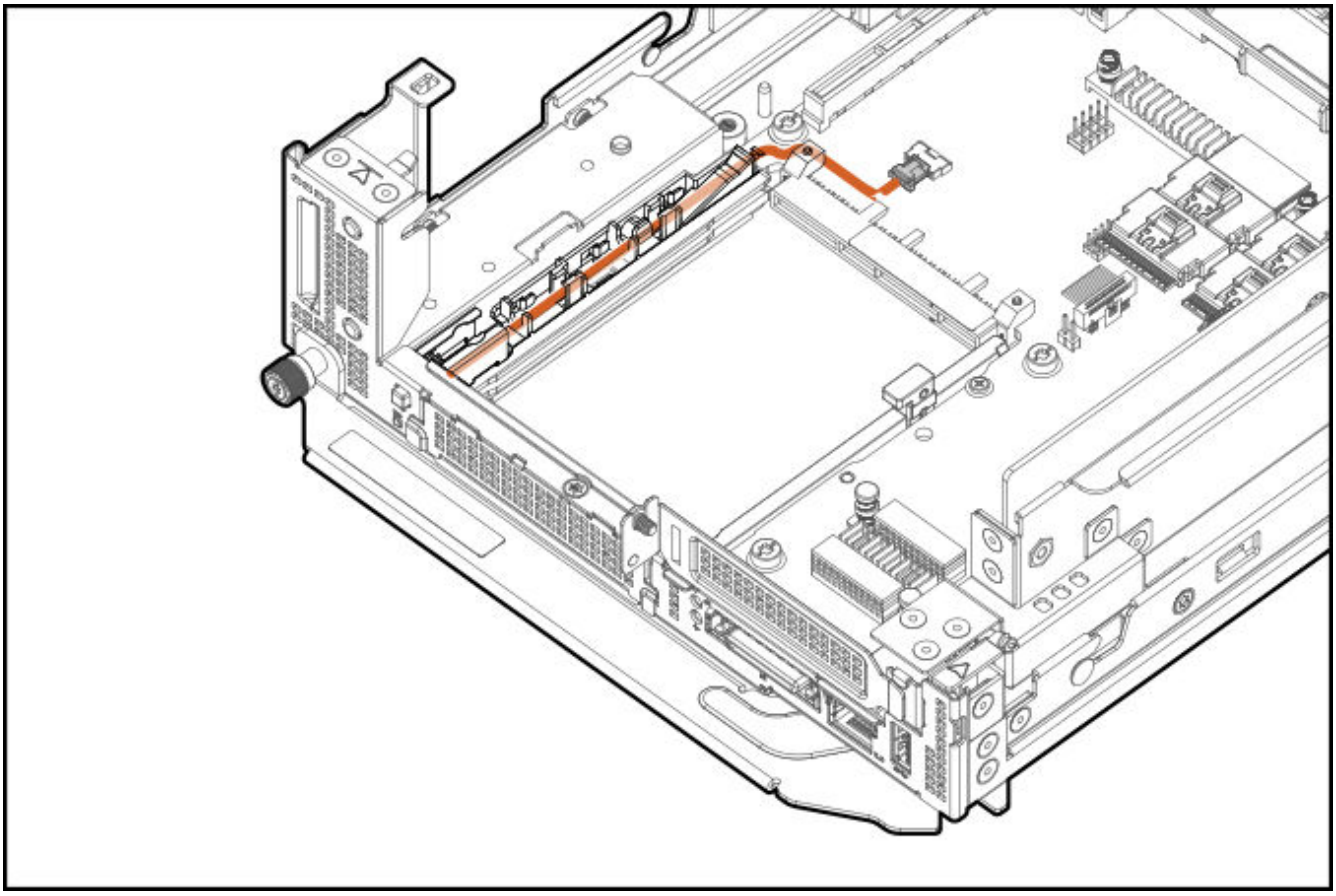

Uses the Rear I/O to Half-Width System Board Power Switch cable.

Drive backplane power cabling

Subtopics

Gen10 Plus 8 SFF SAS/SATA Standard backplane power cabling
U.3 Premium 8 SFF NVMe backplane power cabling

Gen10 Plus 8 SFF SAS/SATA Standard backplane power cabling

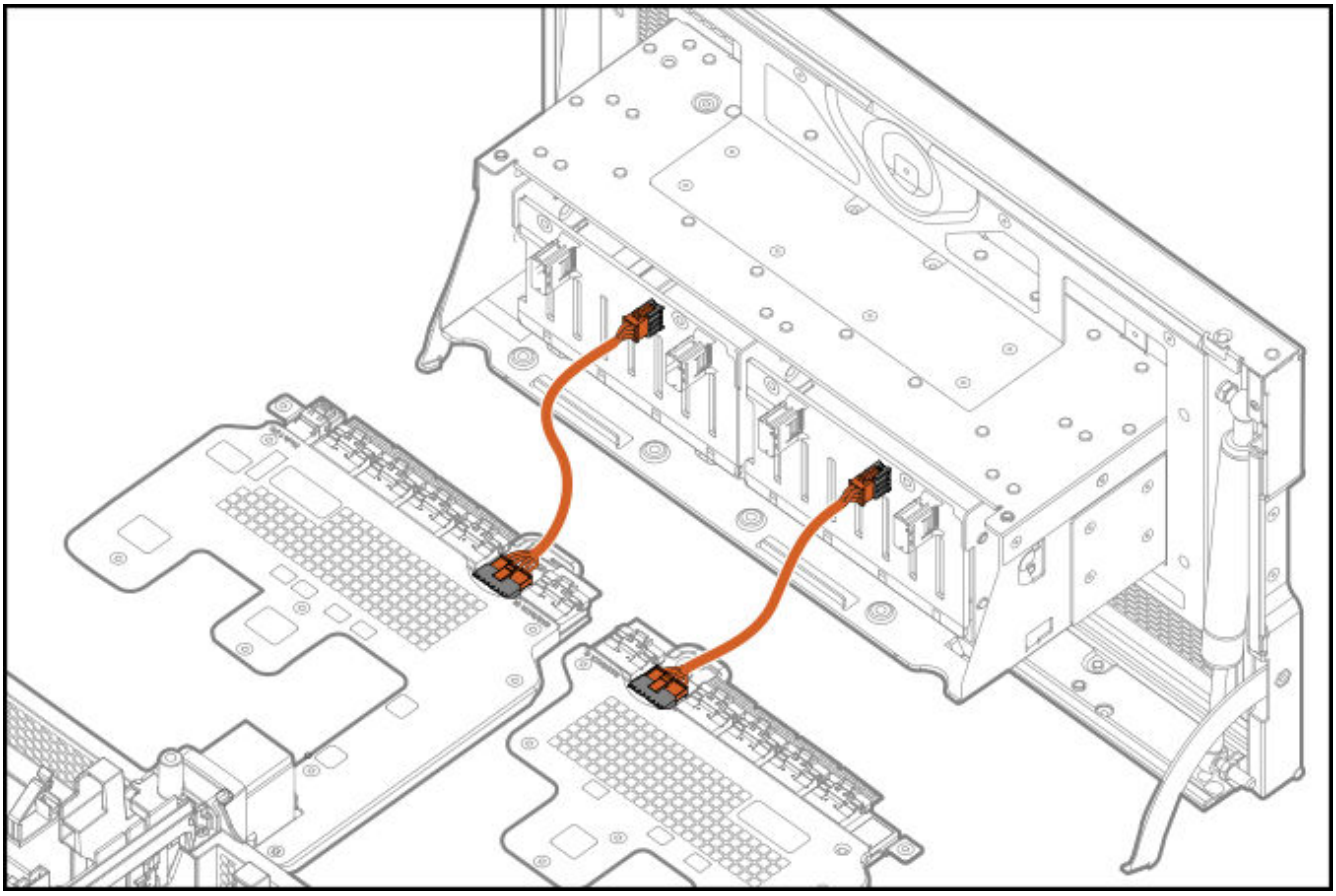

Uses the Front Panel Pass-Thru Board to Drive Backplane Power cable.

U.3 Premium 8 SFF NVMe backplane power cabling

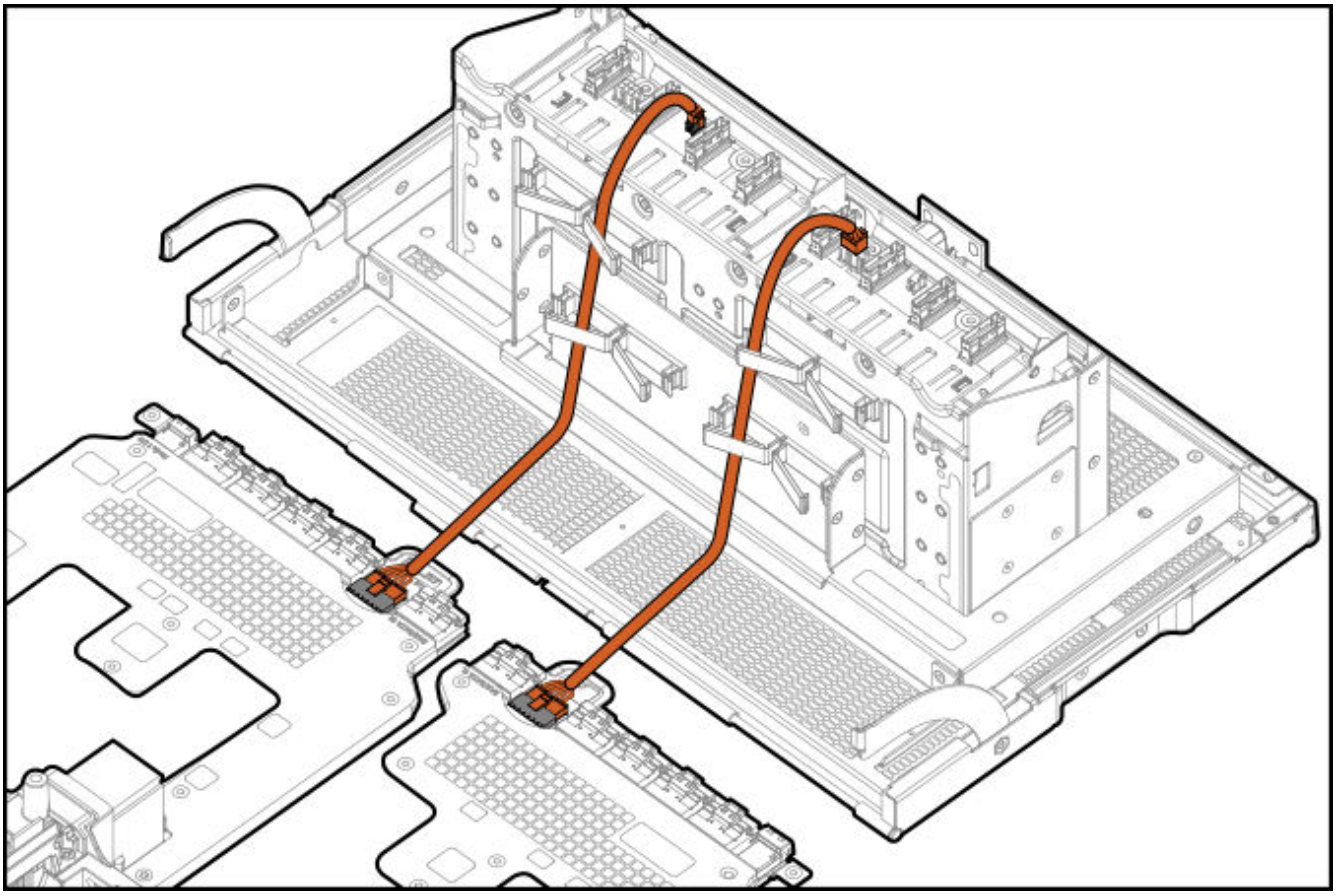

Uses the Front Panel Pass-Thru Board to Drive Backplane Power cable.

GPU power cabling

Subtopics

4 double-width PCIe GPU to PCIe GPU board power cabling
4 double-width PCIe GPU to PCIe GPU board power cabling

4 double-width PCIe GPU to PCIe GPU board power cabling

One PCIe slot board to eight PCIe GPU power cables.

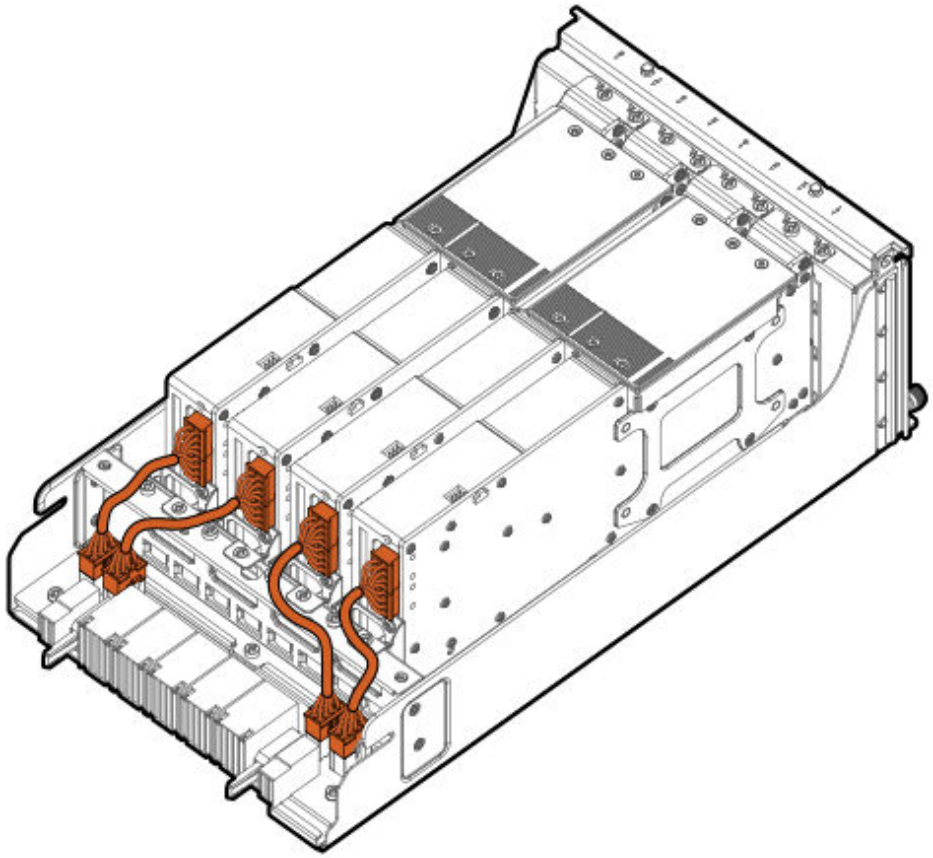

4 double-width PCIe GPU to PCIe GPU board power cabling

One Power, slot board PCIe eight to PCIe eight cable.

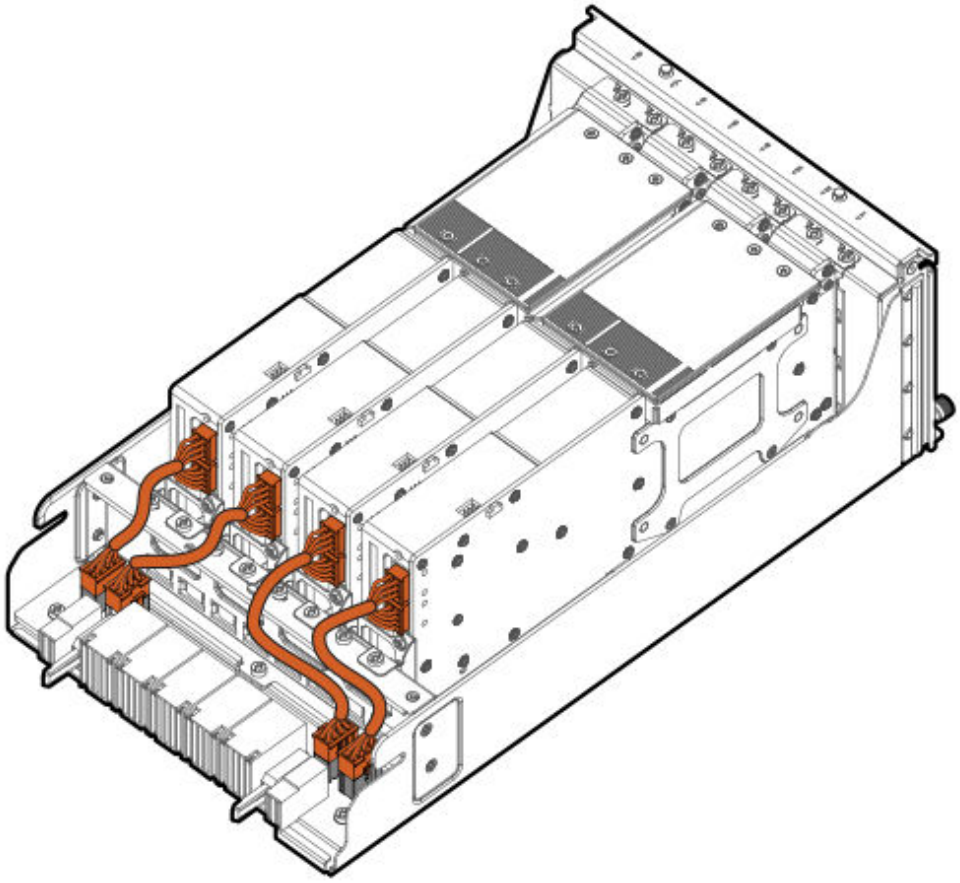

Software and configuration utilities

Subtopics

- Server mode
- iLO
- Integrated Management Log
- Intelligent Provisioning
- Management security
- Scripting Toolkit for Windows and Linux
- UEFI System Utilities
- HPE Smart Storage Administrator
- HPE InfoSight for servers
- USB support
- Redundant ROM support
- Keeping the system current

Server mode

The software and configuration utilities presented in this section operate in online mode, offline mode, or in both modes.

Software or configuration utility	Server mode
#GUID-D7147C7F-2016-0901-06D0-000000001A72	Online and Offline
iLO	Online and Offline
	Online and Offline
iLO RESTful API	Online and Offline
Intelligent Provisioning	Online and Offline
Scripting Toolkit for Windows and Linux	Online
Service Pack for ProLiant	Online and Offline
Introduction to Smart Update Manager	Online and Offline
UEFI System Utilities	Offline

iLO

iLO 5 is a remote server management processor embedded on the system boards of supported HPE servers and compute modules. iLO enables the monitoring and controlling of servers from remote locations. iLO management is a powerful tool that provides multiple ways to configure, update, monitor, and repair servers remotely.

For more information about iLO, see the iLO user guide at the following website: **https://www.hpe.com/support/ilo-docs**.

Subtopics

iLO Federation
iLO RESTful API
RESTful Interface Tool
iLO Amplifier Pack

iLO Federation

iLO Federation enables you to manage multiple servers from one system using the iLO web interface.

When configured for iLO Federation, iLO uses multicast discovery and peer-to-peer communication to enable communication between the systems in iLO Federation groups.

When you navigate to one of the iLO Federation pages, a data request is sent from the iLO system running the web interface to its peers, and from those peers to other peers until all data for the selected iLO Federation group is retrieved.

iLO supports the following features:

- Group health status—View server health and model information.
- Group virtual media—Connect URL-based media for access by a group of servers.
- Group power control—Manage the power status of a group of servers.
- Group firmware update—Update the firmware of a group of servers.
- Group license installation—Enter a license key to activate iLO licensed features on a group of servers.
- Group configuration—Add iLO Federation group memberships for multiple iLO systems.

Any user can view information on iLO Federation pages, but a license is required for using the following features: Group virtual media, Group power control, Group power capping, Group configuration, and Group firmware update.

For more information about iLO Federation, see the iLO user guide at the following website: **https://www.hpe.com/support/ilo-docs**.

iLO RESTful API

iLO includes the iLO RESTful API, which is Redfish API conformant. The iLO RESTful API is a management interface that server management tools can use to perform configuration, inventory, and monitoring tasks by sending basic HTTPS operations (GET, PUT, POST, DELETE, and PATCH) to the iLO web server.

To learn more about the iLO RESTful API, see the Hewlett Packard Enterprise website (**https://www.hpe.com/support/restfulinterface/docs**).

For specific information about automating tasks using the iLO RESTful API, see libraries and sample code at **https://www.hpe.com/info/redfish**.

For more information, watch the **Redfish & How it works with HPE Server Management** video.

RESTful Interface Tool

The RESTful Interface Tool (iLOREST) is a scripting tool that allows you to automate HPE server management tasks. It provides a set of simplified commands that take advantage of the iLO RESTful API. You can install the tool on your computer for remote use or install it locally on a server with a Windows or Linux Operating System. The RESTful Interface Tool offers an interactive mode, a scriptable mode, and a file-based mode similar to CONREP to help decrease automation times.

For more information, see the following website: **https://www.hpe.com/info/resttool**.

iLO Amplifier Pack

iLO Amplifier Pack is an advanced server inventory, firmware and driver update solution that enables rapid discovery, detailed inventory reporting, firmware, and driver updates by leveraging iLO advanced functionality. iLO Amplifier Pack performs rapid server discovery and inventory for thousands of supported servers for the purpose of updating firmware and drivers at scale.

> **IMPORTANT**
>
> The iLO Federation groups functionality to be discontinued from iLO Amplifier Pack 2.20 release.

For more information about iLO Amplifier Pack, see the iLO Amplifier Pack User Guide at the following website: **https://www.hpe.com/support/ilo-ap-ug-en**.

Integrated Management Log

The IML records hundreds of events and stores them in an easy-to-view form. The IML timestamps each event with one-minute granularity.

You can view recorded events in the IML in several ways, including the following:

- From within HPE SIM
- From within the UEFI System Utilities
- From within the Embedded UEFI shell
- From within the iLO web interface

Intelligent Provisioning

Intelligent Provisioning is a single-server deployment tool embedded in ProLiant servers and HPE Synergy compute modules. Intelligent Provisioning simplifies server setup, providing a reliable and consistent way to deploy servers.

Intelligent Provisioning prepares the system for installing original, licensed vendor media and Hewlett Packard Enterprise-branded versions of OS software. Intelligent Provisioning also prepares the system to integrate optimized server support software from the Service Pack for ProLiant (SPP). SPP is a comprehensive systems software and firmware solution for ProLiant servers, server blades, and their enclosures. The same solution for HPE Synergy compute modules is now called Synergy Service Pack (SSP). These components are preloaded with a basic set of firmware and OS components that are installed along with Intelligent Provisioning.

IMPORTANT

HPE Synergy servers do not support OS installation with Intelligent Provisioning, but they do support the maintenance features. For more information, see "Performing Maintenance" in the Intelligent Provisioning user guide and online help.

After the server is running, you can update the firmware to install additional components. You can also update any components that have been outdated since the server was manufactured.

To access Intelligent Provisioning:

- Press **F10** from the POST screen and enter Intelligent Provisioning.
- From the iLO web interface, using **Lifecycle Management**. **Lifecycle Management** allows you to access Intelligent Provisioning without rebooting your server.

NOTE

1. HPE ProLiant RL3xx Gen 11 platforms do not support Intelligent Provisioning through both F10 and Lifecycle Management.
2. HPE Gen11 platforms running OpenBMC do not support Intelligent Provisioning.

Subtopics

Intelligent Provisioning operation

Intelligent Provisioning operation

NOTE

Intelligent Provisioning 4.00 and later requires iLO 6 firmware version 1.00 or later.

Intelligent Provisioning includes the following components:

- Critical boot drivers
- Active Health System (AHS)
- Erase Utility
- Deployment Settings

IMPORTANT

- Although your server is preloaded with firmware and drivers, Hewlett Packard Enterprise recommends updating the firmware upon initial setup. Also, downloading and updating the latest version of Intelligent Provisioning ensures that the latest supported features are available.
- For ProLiant servers, firmware is updated using the Intelligent Provisioning Firmware Update utility.
- Do not update firmware if the version you are currently running is required for compatibility.

NOTE

Intelligent Provisioning does not function within multihomed configurations. A multihomed host is one that is connected to two or more networks or has two or more IP addresses.

Intelligent Provisioning provides installation help for the following operating systems:

- Microsoft Windows Server
- Red Hat Enterprise Linux
- SUSE Linux Enterprise Server
- VMware ESXi/vSphere Custom Image

Not all versions of an OS are supported. For information about specific versions of a supported operating system, see the OS Support matrix on the Hewlett Packard Enterprise website (**https://www.hpe.com/info/ossupport**).

Management security

Hewlett Packard Enterprise Gen10 and Gen10 Plus servers and compute modules are built with some of the industry's most advanced security capabilities, out of the box, with a foundation of secure embedded management applications and firmware. The management security provided by HPE embedded management products enables secure support of modern workloads, protecting your components from unauthorized access and unapproved use. The range of embedded management and optional software and firmware available with the iLO Advanced license provides security features that help ensure protection, detection, and recovery from advanced cyber attacks.

For more information, see the HPE Gen10 and Gen10 Plus Security Reference Guide at **https://www.hpe.com/info/server-security-reference-en**.

Scripting Toolkit for Windows and Linux

The STK for Windows and Linux is a server deployment product that delivers an unattended automated installation for high-volume server deployments. The STK is designed to support ProLiant servers. The toolkit includes a modular set of utilities and important documentation that describes how to apply these tools to build an automated server deployment process.

The STK provides a flexible way to create standard server configuration scripts. These scripts are used to automate many of the manual steps in the server configuration process. This automated server configuration process cuts time from each deployment, making it possible to scale rapid, high-volume server deployments.

For more information or to download the STK, see the **Hewlett Packard Enterprise website**.

UEFI System Utilities

The UEFI System Utilities is embedded in the system ROM. Its features enable you to perform a wide range of configuration activities, including:

- Configuring system devices and installed options.
- Enabling and disabling system features.

- Displaying system information.
- Selecting the primary boot controller or partition.
- Configuring memory options.
- Launching other preboot environments.

HPE servers with UEFI can provide:

- Support for boot partitions larger than 2.2 TB. Such configurations could previously only be used for boot drives when using RAID solutions.
- Secure Boot that enables the system firmware, option card firmware, operating systems, and software collaborate to enhance platform security.
- UEFI Graphical User Interface (GUI)
- An Embedded UEFI Shell that provides a preboot environment for running scripts and tools.
- Boot support for option cards that only support a UEFI option ROM.

Subtopics

Secure Boot
Launching the Embedded UEFI Shell

Secure Boot

Secure Boot is a server security feature that is implemented in the BIOS and does not require special hardware. Secure Boot ensures that each component launched during the boot process is digitally signed and that the signature is validated against a set of trusted certificates embedded in the UEFI BIOS. Secure Boot validates the software identity of the following components in the boot process:

- UEFI drivers loaded from PCIe cards
- UEFI drivers loaded from mass storage devices
- Preboot UEFI Shell applications
- OS UEFI boot loaders

When Secure Boot is enabled:

- Firmware components and operating systems with boot loaders must have an appropriate digital signature to execute during the boot process.

- Operating systems must support Secure Boot and have an EFI boot loader signed with one of the authorized keys to boot. For more information about supported operating systems, see **https://www.hpe.com/servers/ossupport**.

You can customize the certificates embedded in the UEFI BIOS by adding or removing your own certificates, either from a management console directly attached to the server, or by remotely connecting to the server using the iLO Remote Console.

You can configure Secure Boot:

- Using the **System Utilities** options described in the following sections.
- Using the iLO RESTful API to clear and restore certificates. For more information, see the Hewlett Packard Enterprise website (**https://www.hpe.com/info/redfish**).
- Using the `secboot` command in the Embedded UEFI Shell to display Secure Boot databases, keys, and security reports.

Launching the Embedded UEFI Shell

Prerequisites

- **Embedded UEFI Shell** is set to **Enabled**.

About this task

Use the **Embedded UEFI Shell** option to launch the Embedded UEFI Shell. The Embedded UEFI Shell is a preboot command-line environment for scripting and running UEFI applications, including UEFI boot loaders. The Shell also provides CLI-based commands you can use to obtain system information, and to configure and update the system BIOS.

Procedure

1. From the **System Utilities** screen, select **Embedded Applications > Embedded UEFI Shell**.

   The **Embedded UEFI Shell** screen appears.

2. Press any key to acknowledge that you are physically present.

   This step ensures that certain features, such as disabling **Secure Boot** or managing the **Secure Boot** certificates using third-party UEFI tools, are not restricted.

3. If an administrator password is set, enter it at the prompt and press **Enter**.

   The `Shell>` prompt appears.

4. Enter the commands required to complete your task.

5. Enter the `exit` command to exit the Shell.

HPE Smart Storage Administrator

HPE SSA is the main tool for configuring arrays on HPE Smart Array SR controllers. It exists in three interface formats: the HPE SSA GUI, the HPE SSA CLI, and HPE SSA Scripting. All formats provide support for configuration tasks. Some of the advanced tasks are available in only one format.

The diagnostic features in HPE SSA are also available in the standalone software HPE Smart Storage Administrator Diagnostics Utility CLI.

During the initial provisioning of the server or compute module, an array is required to be configured before the operating system can be installed. You can configure the array using SSA.

HPE SSA is accessible both offline (either through HPE Intelligent Provisioning or as a standalone bootable ISO image) and online:

- Accessing HPE SSA in the offline environment

  IMPORTANT

  If you are updating an existing server in an offline environment, obtain the latest version of HPE SSA through Service Pack for ProLiant before performing configuration procedures.

  Using one of multiple methods, you can run HPE SSA before launching the host operating system. In offline mode, users can configure or maintain detected and supported devices, such as optional Smart Array controllers and integrated Smart Array controllers. Some HPE SSA features are only available in the offline environment, such as setting the boot controller and boot volume.

- Accessing HPE SSA in the online environment
  This method requires an administrator to download the HPE SSA executables and install them. You can run HPE SSA online after launching the host operating system.

For more information, see HPE SSA online help.

HPE InfoSight for servers

The HPE InfoSight portal is a secure web interface hosted by HPE that allows you to monitor supported devices through a graphical interface.

HPE InfoSight for servers:

- Combines the machine learning and predictive analytics of HPE InfoSight with the health and performance monitoring of Active Health System (AHS) and HPE iLO to optimize performance and predict and prevent problems
- Provides automatic collection and analysis of the sensor and telemetry data from AHS to derive insights from the behaviors of the install base to provide recommendations to resolve problems and improve performance

For more information on getting started and using HPE InfoSight for Servers, go to: **https://www.hpe.com/info/infosight-servers-docs**.

HPE InfoSight for Servers do not support HPE ProLiant RL3xx Gen 11 platforms.

USB support

Hewlett Packard Enterprise Gen10 and Gen10 Plus servers support all USB operating speeds depending on the device that is connected to the server.

Subtopics

External USB functionality

External USB functionality

Hewlett Packard Enterprise provides external USB support to enable local connection of USB devices for server administration, configuration, and diagnostic procedures.

For additional security, external USB functionality can be disabled through USB options in UEFI System Utilities.

Redundant ROM support

The server enables you to upgrade or configure the ROM safely with redundant ROM support. The server has a single ROM that acts as two separate ROM images. In the standard implementation, one side of the ROM contains the current ROM program version, while the other side of the ROM contains a backup version.

NOTE

The server ships with the same version programmed on each side of the ROM.

Subtopics

Safety and security benefits

Safety and security benefits

When you flash the system ROM, the flashing mechanism writes over the backup ROM and saves the current ROM as a backup, enabling you to switch easily to the alternate ROM version if the new ROM becomes corrupted for any reason. This feature protects the existing ROM version, even if you experience a power failure while flashing the ROM.

Keeping the system current

Subtopics

Updating firmware or system ROM
Drivers
Software and firmware
Operating system version support
HPE Pointnext Portfolio
Proactive notifications

Updating firmware or system ROM

About this task

To update firmware or system ROM, use one of the following methods:

- The **Firmware Update** option in the System Utilities.
- The `fwupdate` command in the **Embedded UEFI Shell**.
- Service Pack for ProLiant (SPP)
- HPE online flash components
- Moonshot Component Pack

Subtopics

Service Pack for ProLiant
Updating firmware from the System Utilities
Updating the firmware from the UEFI Embedded Shell
Online Flash components

Service Pack for ProLiant

SPP is a systems software and firmware solution delivered as a single ISO file download. This solution uses SUM as the deployment tool and is tested and supports HPE ProLiant, HPE BladeSystem, HPE Synergy, and HPE Apollo servers and infrastructure.

SPP, along with SUM and iSUT, provides Smart Update system maintenance tools that systematically update HPE ProLiant, HPE BladeSystem, HPE Synergy, and HPE Apollo servers and infrastructure.

SPP can be used in an online mode on a server running Windows, Linux, or VMware vSphere ESXi, or in an offline mode where the server is booted to an operating system included in the ISO file.

The preferred method for downloading an SPP is using the SPP Custom Download at **https://www.hpe.com/servers/spp/custom**.

Subtopics

Introduction to Smart Update Manager

Introduction to Smart Update Manager

SUM is an innovative tool for maintaining and updating the firmware, drivers, and system software of HPE ProLiant, HPE BladeSystem, HPE Synergy, HPE Superdome Flex servers, HPE Edgeline and HPE Apollo servers, infrastructure, and associated options.

SUM identifies associated nodes that you can update at the same time to avoid interdependency issues.

The Key features of SUM include:

- Discovery engine that finds installed versions of hardware, firmware, and software on nodes.
- SUM deploys updates in the correct order and ensures that all dependencies are met before deploying an update.
- Interdependency checking.
- Automatic and step-by-step Localhost Guided Update process.
- Web browser-based user interface.

- Ability to create custom baselines and ISOs.
- Support for iLO Repository (Gen10/iLO5 and later nodes only).
- Simultaneous firmware and software deployment for multiple remote nodes.
- Local offline firmware deployments with SPP deliverables.
- Extensive logging in all modes.

> **NOTE**
> Support for HPE Integrity servers has been discontinued from SUM 8.x.

Updating firmware from the System Utilities

About this task

Use the **Firmware Updates** option to update firmware components in the system, including the system BIOS, NICs, and storage cards.

Procedure

1. Access the System ROM Flash Binary component for your server from the Hewlett Packard Enterprise Support Center.
2. Copy the binary file to a USB media or iLO virtual media.
3. Attach the media to the server.
4. Launch the **System Utilities**, and select **Embedded Applications > Firmware Update**.
5. Select a device.

   The **Firmware Updates** screen lists details about your selected device, including the current firmware version in use.
6. Select **Select Firmware File**.
7. Select the flash file in the **File Explorer** list.

   The firmware file is loaded and the **Firmware Updates** screen lists details of the file in the **Selected firmware file** field.
8. Select **Image Description**, and then select a firmware image.

   A device can have multiple firmware images.

9. Select **Start firmware update**.

Subtopics

Integrated Smart Update Tools

Integrated Smart Update Tools

Integrated Smart Update Tools (iSUT) is the smart update solution for performing online firmware and driver updates. iSUT is used with iLO 5, iLO6 and with update solutions (management appliances such as iLO Amplifier Pack or HPE OneView or Compute Ops Management and Smart Update Manager) to stage, install, and activate firmware and driver updates.

The solution must be installed on the OS, where it updates results through Rich Infrastructure Services (RIS) communication.

- **iSUT**: Polls iLO to check for requests from SUM, iLO Amplifier Pack, HPE OneView or Compute Ops Management for updates through local iLO using the iLO channel interface driver installed on the OS and orchestrates staging, deploying, and activating updates. You can adjust the polling interval by issuing the appropriate command-line option provided by iSUT. Performs inventory on target servers, stages deployment, deploys updates, and then reboots the servers.
- **iLO 5 / iLO6 with integrated Smart Update** (Gen10 or later servers only): Performs iLO Repository-based updates by downloading the components from iLO Repository when iLO Installation Queue has the components which can be updated by iSUT.
- **iLO Amplifier Pack and HPE OneView**: Displays available updates for servers. Communicates with iSUT (or iSUT 1.x) to initiate updates using the iLO Redfish interface. iSUT reports the status of updates to iLO Amplifier Pack through iLO Restful Interface.
- **SUM**: A tool for firmware and driver maintenance for HPE ProLiant servers and associated options.



NOTE

SUM and iLO Amplifier Pack should not manage the same nodes.

Updating the firmware from the UEFI Embedded Shell

Procedure

1. Access the System ROM Flash Binary component for your server from the Hewlett Packard Enterprise Support Center (**https://www.hpe.com/support/hpesc**).

2. Copy the binary file to a USB media or iLO virtual media.
3. Attach the media to the server.
4. Boot to the UEFI Embedded Shell.
5. To obtain the assigned file system volume for the USB key, enter `map -r`.
6. Change to the file system that contains the System ROM Flash Binary component for your server. Enter one of the `fsx` file systems available, such as `fs0:` or `fs1:`, and press **Enter**.
7. Use the `cd` command to change from the current directory to the directory that contains the binary file.
8. Flash the system ROM by entering `fwupdate -d BIOS -f filename`.
9. Reboot the server. A reboot is required after the firmware update in order for the updates to take effect and for hardware stability to be maintained.

Online Flash components

This component provides updated system firmware that can be installed directly on supported operating systems. Additionally, when used in conjunction with SUM, this Smart Component allows the user to update firmware on remote servers from a central location. This remote deployment capability eliminates the need for the user to be physically present at the server to perform a firmware update.

Drivers

> **IMPORTANT**
> Always perform a backup before installing or updating device drivers.

Update drivers using any of the following **Smart Update Solutions**:

- Download the latest Service Pack for ProLiant (includes Smart Update Manager)
- Create a custom SPP download
- Download Smart Update Manager for Linux
- Download specific drivers

To locate the drivers for a server, go to the **Hewlett Packard Enterprise Support Center website**, and then search for the product name/number.

Software and firmware

Update software and firmware before using the server for the first time, unless any installed software or components require an older version.

For system software and firmware updates, use one of the following sources:

- Download the SPP from the Hewlett Packard Enterprise website (**https://www.hpe.com/servers/spp/download**).
- Download individual drivers, firmware, or other system software components from the server product page in the Hewlett Packard Enterprise Support Center website (**https://www.hpe.com/support/hpesc**).

Operating system version support

For information about specific versions of a supported operating system, refer to the **operating system support matrix**.

HPE Pointnext Portfolio

HPE Pointnext delivers confidence, reduces risk, and helps customers realize agility and stability. Hewlett Packard Enterprise helps customers succeed through Hybrid IT by simplifying and enriching the on-premise experience, informed by public cloud qualities and attributes.

Operational Support Services enable you to choose the right service level, length of coverage, and response time to fit your business needs. For more information, see the Hewlett Packard Enterprise website:

https://www.hpe.com/us/en/services/operational.html

Utilize the Advisory and Transformation Services in the following areas:

- Private or hybrid cloud computing
- Big data and mobility requirements
- Improving data center infrastructure

- Better use of server, storage, and networking technology

For more information, see the Hewlett Packard Enterprise website:

https://www.hpe.com/services/consulting

Proactive notifications

30 to 60 days in advance, Hewlett Packard Enterprise sends notifications to subscribed customers on upcoming:

- Hardware, firmware, and software changes
- Bulletins
- Patches
- Security alerts

You can subscribe to proactive notifications on the **https://www.hpe.com/support/hpesc**.

Troubleshooting

Subtopics

Troubleshooting resources

Troubleshooting resources

Troubleshooting resources are available for HPE Gen10 and Gen10 Plus server products in the following documents:

- Troubleshooting Guide for HPE ProLiant Gen10 and Gen10 Plus servers provides procedures for resolving common problems and comprehensive courses of action for fault isolation and identification, issue resolution, and software maintenance.
- Integrated Management Log Messages and Troubleshooting Guide for HPE ProLiant Gen10 and Gen10 Plus servers and HPE Synergy provides IML messages and associated troubleshooting information to resolve critical and cautionary IML events.

To access troubleshooting resources for your product, see the **Hewlett Packard Enterprise website**.

System battery replacement

Subtopics

System battery information
Removing and replacing the system battery

System battery information

The server contains an internal lithium manganese dioxide, a vanadium pentoxide, or an alkaline battery that provides power to the real-time clock.

WARNING

If this battery is not properly handled, a risk of fire or burning exists. To reduce the risk of personal injury:

- Do not attempt to recharge the battery.
- Do not expose the battery to temperatures higher than 60°C (140°F).
- Do not expose the battery to low air pressure as it might lead to explosion or leakage of flammable liquid or gas.
- Do not disassemble, crush, puncture, short external contacts, or dispose of the battery in fire or water.

Removing and replacing the system battery

Procedure

1. Back up all server data.

2. .
3. Disconnect all peripheral cables from the server.
4. Remove the system board module from the chassis.
5. Place the system board module on a flat, level work surface.
6. Remove the system board module access panel.
7. Locate the battery on the system board.
8. Slightly push the metal tab, and then remove the system battery from the socket.

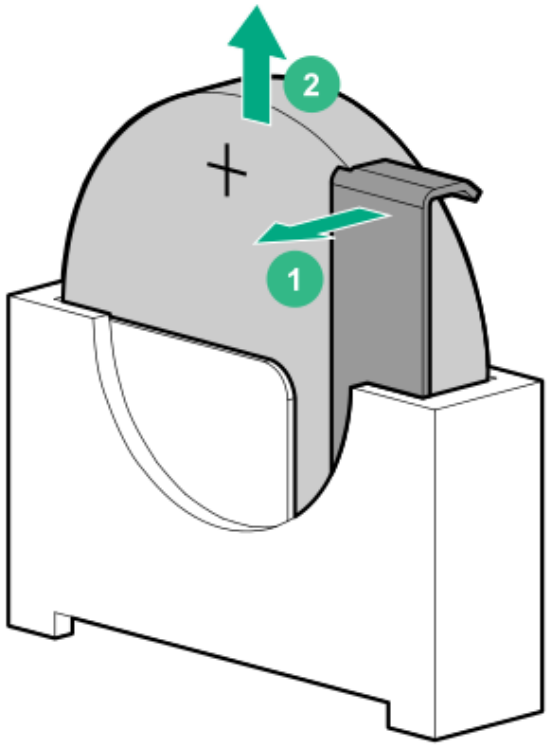

9. Slightly push the metal tab, and then install the new system battery in the socket.

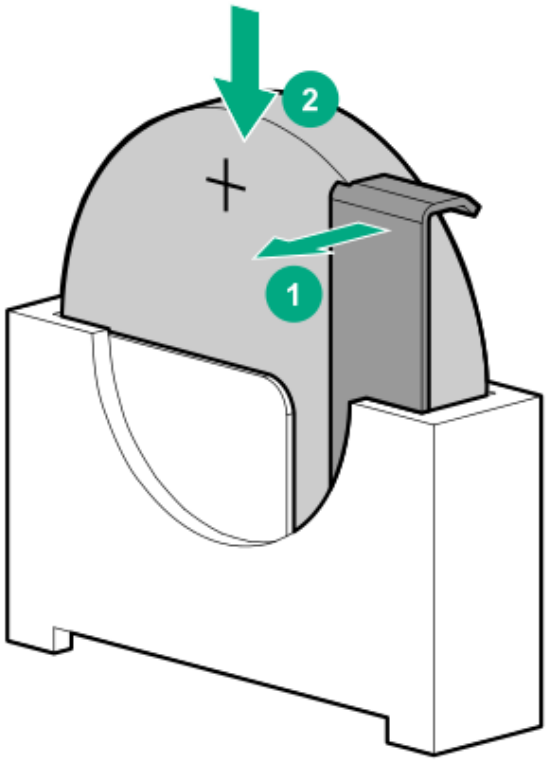

.0. Properly dispose of the old battery. For more information about proper battery disposal, contact an authorized reseller or a service provider.

More information

Remove the system board module from the chassis
Remove the system board module access panel
System board components

Specifications

Subtopics

Server mechanical specifications
Power supply specifications

Server mechanical specifications

Specification	Value
Height	265 mm (10.43 in)
Depth	850 mm (33.46 in)
Width	439 mm (17.28 in)
Maximum system weight	98.4 kg (217.0 lbs)

Power supply specifications

Subtopics

HPE 3000 W 200–277 VAC Platinum Hot-plug Power Supply
HPE 54 V Out 3000 W 200–277 VAC Hot-plug Power Supply

HPE 3000 W 200–277 VAC Platinum Hot-plug Power Supply

Specification	Value
Input requirements	—
Input voltage range	200 VAC to 277 VAC
Nominal frequency range	50 Hz to 60 Hz
Nominal input current	15.8 A at 200 VAC 11.7 A at 277 VAC
Maximum rated input wattage rating	3127 W at 200 VAC 3210 W at 277 VAC
BTUs per hour	10,671 at 200 VAC 10,951 at 277 VAC
Power supply output	—

Specification	Value
Rated steady-state power	2900 W at 200 VAC input 3000 W at 208 VAC to 277 VAC input
Maximum peak power	3900 W for 4 ms max at 200 VAC to 277 VAC input
Maximum inrush current duration	0.2 ms at 200 VAC to 277 VAC input

HPE 54 V Out 3000 W 200–277 VAC Hot-plug Power Supply

Specification	Value
Input requirements	—
Input voltage range	200 VAC to 277 VAC
Nominal frequency range	50 Hz to 60 Hz
Nominal input current	16 A at 200 VAC 11.6 A at 277 VAC
Maximum rated input wattage rating	3200 W at 200 VAC 3171 W at 277 VAC
BTUs per hour	10,918 at 200 VAC 10,820 at 277 VAC
Power supply output	—
Rated steady-state power	3000 W at 200 VAC to 277 VAC input
Maximum peak power	3900 W for 4ms at 200 VAC to 277 VAC input
Maximum inrush current duration	0.2 ms at 200 VAC to 277 VAC input

Websites

General websites

Single Point of Connectivity Knowledge (SPOCK) Storage compatibility matrix

https://www.hpe.com/storage/spock

Storage white papers and analyst reports

https://www.hpe.com/storage/whitepapers

For additional websites, see Support and other resources.

Support and other resources

Subtopics

Accessing Hewlett Packard Enterprise Support
HPE product registration
Accessing updates
Remote support
Warranty information
Regulatory information
Documentation feedback

Accessing Hewlett Packard Enterprise Support

- For live assistance, go to the Contact Hewlett Packard Enterprise Worldwide website:

  https://www.hpe.com/info/assistance

- To access documentation and support services, go to the Hewlett Packard Enterprise Support Center website:

  https://www.hpe.com/support/hpesc

Information to collect

- Technical support registration number (if applicable)
- Product name, model or version, and serial number

- Operating system name and version
- Firmware version
- Error messages
- Product-specific reports and logs
- Add-on products or components
- Third-party products or components

HPE product registration

To gain the full benefits of the Hewlett Packard Enterprise Support Center and your purchased support services, add your contracts and products to your account on the HPESC.

- When you add your contracts and products, you receive enhanced personalization, workspace alerts, insights through the dashboards, and easier management of your environment.
- You will also receive recommendations and tailored product knowledge to self-solve any issues, as well as streamlined case creation for faster time to resolution when you must create a case.

To learn how to add your contracts and products, see **https://www.hpe.com/info/add-products-contracts**.

Accessing updates

- Some software products provide a mechanism for accessing software updates through the product interface. Review your product documentation to identify the recommended software update method.
- To download product updates:

  Hewlett Packard Enterprise Support Center

  https://www.hpe.com/support/hpesc

  My HPE Software Center

  https://www.hpe.com/software/hpesoftwarecenter

- To subscribe to eNewsletters and alerts:

  https://www.hpe.com/support/e-updates

- To view and update your entitlements, and to link your contracts and warranties with your profile, go to the Hewlett Packard Enterprise Support Center **More Information on Access to Support Materials** page:

  https://www.hpe.com/support/AccessToSupportMaterials

> **IMPORTANT**
>
> Access to some updates might require product entitlement when accessed through the Hewlett Packard Enterprise Support Center. You must have an HPE Account set up with relevant entitlements.

Remote support

Remote support is available with supported devices as part of your warranty or contractual support agreement. It provides intelligent event diagnosis, and automatic, secure submission of hardware event notifications to Hewlett Packard Enterprise, which initiates a fast and accurate resolution based on the service level of your product. Hewlett Packard Enterprise strongly recommends that you register your device for remote support.

If your product includes additional remote support details, use search to locate that information.

HPE Get Connected

https://www.hpe.com/services/getconnected

HPE Tech Care Service

https://www.hpe.com/services/techcare

HPE Complete Care Service

https://www.hpe.com/services/completecare

Warranty information

To view the warranty information for your product, see the **warranty check tool**.

Regulatory information

To view the regulatory information for your product, view the Safety and Compliance Information for Server, Storage, Power, Networking, and Rack Products, available at the Hewlett Packard Enterprise Support Center:

https://www.hpe.com/support/Safety-Compliance-EnterpriseProducts

Additional regulatory information

Hewlett Packard Enterprise is committed to providing our customers with information about the chemical substances in our products as needed to comply with legal requirements such as REACH (Regulation EC No 1907/2006 of the European Parliament and the Council). A chemical information report for this product can be found at:

https://www.hpe.com/info/reach

For Hewlett Packard Enterprise product environmental and safety information and compliance data, including RoHS and REACH, see:

https://www.hpe.com/info/ecodata

For Hewlett Packard Enterprise environmental information, including company programs, product recycling, and energy efficiency, see:

https://www.hpe.com/info/environment

Documentation feedback

Hewlett Packard Enterprise is committed to providing documentation that meets your needs. To help us improve the documentation, use the **Feedback** button and icons (at the bottom of an opened document) on the Hewlett Packard Enterprise Support Center portal (**https://www.hpe.com/support/hpesc**) to send any errors, suggestions, or comments. This process captures all document information.