HP ProLiant BL460c Generation 5 Server Blade Maintenance and Service Guide



Part Number 504088-002
January 2009 (Second Edition)

© Copyright 2008, 2009 Hewlett-Packard Development Company, L.P.

The information contained herein is subject to change without notice. The only warranties for HP products and services are set forth in the express warranty statements accompanying such products and services. Nothing herein should be construed as constituting an additional warranty. HP shall not be liable for technical or editorial errors or omissions contained herein.

Microsoft and Windows are U.S. registered trademarks of Microsoft Corporation.

Intel and Xeon are trademarks or registered trademarks of Intel Corporation or its subsidiaries in the United States and other countries.

Intended audience

This guide is for an experienced service technician. HP assumes you are qualified in the servicing of computer equipment and trained in recognizing hazards in products with hazardous energy levels and are familiar with weight and stability precautions for rack installations.

Contents

Customer self repair 5
Parts only warranty service 5
Illustrated parts catalog 16
Server blade components 16
Removal and replacement procedures 21
Required tools 21
Safety considerations 21
Preventing electrostatic discharge 21
Server blade warnings and cautions 21
Symbols on equipment 22
Server blade preparation 22
Power down the server blade 23
Remove the server blade 23
Access panel 24
Hard drive blank 25
Hard drive 25
FBDIMM 27
Hard drive backplane 28
Hard drive backplane retainer 29
Front panel/hard drive cage assembly 30
Mezzanine card 31
HP Smart Array E200i Controller cache module 32
HP Smart Array E200i Controller battery pack 33
Server blade handle 34
Release button 35
Heatsink 36
Processor 38
System board 43
System battery 48
Diagnostic tools 50
Troubleshooting resources 50
HP Insight Diagnostics 50
HP Insight Diagnostics survey functionality 50
Integrated Management Log 51
Array Diagnostic Utility 51
HP Systems Insight Manager 51
HP Instant Support Enterprise Edition 52
Web-Based Enterprise Service 52
Open Services Event Manager 52
Component identification 53
Front panel components 53
Front panel LEDs 54
SAS and SATA hard drive LEDs 55

SAS and SATA hard drive LED combinations 55
System board components 56
Mezzanine connector definitions 57
FBDIMM slot numbering 57
System maintenance switch 57
Hard drive backplane components 58
HP c-Class Blade SUV Cable 59
Specifications 60
Environmental specifications 60
Server blade specifications 60
Acronyms and abbreviations 61
Index 63

Customer self repair

HP products are designed with many Customer Self Repair (CSR) parts to minimize repair time and allow for greater flexibility in performing defective parts replacement. If during the diagnosis period HP (or HP service providers or service partners) identifies that the repair can be accomplished by the use of a CSR part, HP will ship that part directly to you for replacement. There are two categories of CSR parts:

- **Mandatory**—Parts for which customer self repair is mandatory. If you request HP to replace these parts, you will be charged for the travel and labor costs of this service.
- **Optional**—Parts for which customer self repair is optional. These parts are also designed for customer self repair. If, however, you require that HP replace them for you, there may or may not be additional charges, depending on the type of warranty service designated for your product.

NOTE: Some HP parts are not designed for customer self repair. In order to satisfy the customer warranty, HP requires that an authorized service provider replace the part. These parts are identified as "No" in the Illustrated Parts Catalog.

Based on availability and where geography permits, CSR parts will be shipped for next business day delivery. Same day or four-hour delivery may be offered at an additional charge where geography permits. If assistance is required, you can call the HP Technical Support Center and a technician will help you over the telephone. HP specifies in the materials shipped with a replacement CSR part whether a defective part must be returned to HP. In cases where it is required to return the defective part to HP, you must ship the defective part back to HP within a defined period of time, normally five (5) business days. The defective part must be returned with the associated documentation in the provided shipping material. Failure to return the defective part may result in HP billing you for the replacement. With a customer self repair, HP will pay all shipping and part return costs and determine the courier/carrier to be used.

For more information about HP's Customer Self Repair program, contact your local service provider. For the North American program, refer to the HP website (http://www.hp.com/go/selfrepair).

Parts only warranty service

Your HP Limited Warranty may include a parts only warranty service. Under the terms of parts only warranty service, HP will provide replacement parts free of charge.

For parts only warranty service, CSR part replacement is mandatory. If you request HP to replace these parts, you will be charged for the travel and labor costs of this service.

Réparation par le client (CSR)

Les produits HP comportent de nombreuses pièces CSR (Customer Self Repair = réparation par le client) afin de minimiser les délais de réparation et faciliter le remplacement des pièces défectueuses. Si pendant la période de diagnostic, HP (ou ses partenaires ou mainteneurs agréés) détermine que la réparation peut être effectuée à l'aide d'une pièce CSR, HP vous l'envoie directement. Il existe deux catégories de pièces CSR:

- **Obligatoire** - Pièces pour lesquelles la réparation par le client est obligatoire. Si vous demandez à HP de remplacer ces pièces, les coûts de déplacement et main d'œuvre du service vous seront facturés.
- **Facultatif** - Pièces pour lesquelles la réparation par le client est facultative. Ces pièces sont également conçues pour permettre au client d'effectuer lui-même la réparation. Toutefois, si vous demandez à HP de remplacer ces pièces, l'intervention peut ou non vous être facturée, selon le type de garantie applicable à votre produit.

REMARQUE: Certaines pièces HP ne sont pas conçues pour permettre au client d'effectuer lui-même la réparation. Pour que la garantie puisse s'appliquer, HP exige que le remplacement de la pièce soit effectué par un Mainteneur Agréé. Ces pièces sont identifiées par la mention "Non" dans le Catalogue illustré.

Les pièces CSR sont livrées le jour ouvré suivant, dans la limite des stocks disponibles et selon votre situation géographique. Si votre situation géographique le permet et que vous demandez une livraison le jour même ou dans les 4 heures, celle-ci vous sera facturée. Pour bénéficier d'une assistance téléphonique, appelez le Centre d'assistance technique HP. Dans les documents envoyés avec la pièce de rechange CSR, HP précise s'il est nécessaire de lui retourner la pièce défectueuse. Si c'est le cas, vous devez le faire dans le délai indiqué, généralement cinq (5) jours ouvrés. La pièce et sa documentation doivent être retournées dans l'emballage fourni. Si vous ne retournez pas la pièce défectueuse, HP se réserve le droit de vous facturer les coûts de remplacement. Dans le cas d'une pièce CSR, HP supporte l'ensemble des frais d'expédition et de retour, et détermine la société de courses ou le transporteur à utiliser.

Pour plus d'informations sur le programme CSR de HP, contactez votre Mainteneur Agrée local. Pour plus d'informations sur ce programme en Amérique du Nord, consultez le site Web HP (http://www.hp.com/go/selfrepair).

Service de garantie "pièces seules"

Votre garantie limitée HP peut inclure un service de garantie "pièces seules". Dans ce cas, les pièces de rechange fournies par HP ne sont pas facturées.

Dans le cadre de ce service, la réparation des pièces CSR par le client est obligatoire. Si vous demandez à HP de remplacer ces pièces, les coûts de déplacement et main d'œuvre du service vous seront facturés.

Riparazione da parte del cliente

Per abbreviare i tempi di riparazione e garantire una maggiore flessibilità nella sostituzione di parti difettose, i prodotti HP sono realizzati con numerosi componenti che possono essere riparati direttamente dal cliente (CSR, Customer Self Repair). Se in fase di diagnostica HP (o un centro di servizi o di assistenza HP) identifica il guasto come riparabile mediante un ricambio CSR, HP lo spedirà direttamente al cliente per la sostituzione. Vi sono due categorie di parti CSR:

- **Obbligatorie** – Parti che devono essere necessariamente riparate dal cliente. Se il cliente ne affida la riparazione ad HP, deve sostenere le spese di spedizione e di manodopera per il servizio.
- **Opzionali** – Parti la cui riparazione da parte del cliente è facoltativa. Si tratta comunque di componenti progettati per questo scopo. Se tuttavia il cliente ne richiede la sostituzione ad HP, potrebbe dover sostenere spese addizionali a seconda del tipo di garanzia previsto per il prodotto.

NOTA: alcuni componenti HP non sono progettati per la riparazione da parte del cliente. Per rispettare la garanzia, HP richiede che queste parti siano sostituite da un centro di assistenza autorizzato. Tali parti sono identificate da un "No" nel Catalogo illustrato dei componenti.

In base alla disponibilità e alla località geografica, le parti CSR vengono spedite con consegna entro il giorno lavorativo seguente. La consegna nel giorno stesso o entro quattro ore è offerta con un supplemento di costo solo in alcune zone. In caso di necessità si può richiedere l'assistenza telefonica di un addetto del centro di supporto tecnico HP. Nel materiale fornito con una parte di ricambio CSR, HP specifica se il cliente deve restituire dei componenti. Qualora sia richiesta la resa ad HP del componente difettoso, lo si deve spedire ad HP entro un determinato periodo di tempo, generalmente cinque (5) giorni lavorativi. Il componente difettoso deve essere restituito con la documentazione associata nell'imballo di spedizione fornito. La mancata restituzione del componente può comportare la fatturazione del ricambio da parte di HP. Nel caso di riparazione da parte del cliente, HP sostiene tutte le spese di spedizione e resa e sceglie il corriere/vettore da utilizzare.

Per ulteriori informazioni sul programma CSR di HP contattare il centro di assistenza di zona. Per il programma in Nord America fare riferimento al sito Web HP (http://www.hp.com/go/selfrepair).

Servizio di garanzia per i soli componenti

La garanzia limitata HP può includere un servizio di garanzia per i soli componenti. Nei termini di garanzia del servizio per i soli componenti, HP fornirà gratuitamente le parti di ricambio.

Per il servizio di garanzia per i soli componenti è obbligatoria la formula CSR che prevede la riparazione da parte del cliente. Se il cliente invece richiede la sostituzione ad HP, dovrà sostenere le spese di spedizione e di manodopera per il servizio.

Customer Self Repair

HP Produkte enthalten viele CSR-Teile (Customer Self Repair), um Reparaturzeiten zu minimieren und höhere Flexibilität beim Austausch defekter Bauteile zu ermöglichen. Wenn HP (oder ein HP Servicepartner) bei der Diagnose feststellt, dass das Produkt mithilfe eines CSR-Teils repariert werden kann, sendet Ihnen HP dieses Bauteil zum Austausch direkt zu. CSR-Teile werden in zwei Kategorien unterteilt:

- **Zwingend –** Teile, für die das Customer Self Repair-Verfahren zwingend vorgegeben ist. Wenn Sie den Austausch dieser Teile von HP vornehmen lassen, werden Ihnen die Anfahrt- und Arbeitskosten für diesen Service berechnet.
- **Optional –** Teile, für die das Customer Self Repair-Verfahren optional ist. Diese Teile sind auch für Customer Self Repair ausgelegt. Wenn Sie jedoch den Austausch dieser Teile von HP vornehmen lassen möchten, können bei diesem Service je nach den für Ihr Produkt vorgesehenen Garantiebedingungen zusätzliche Kosten anfallen.

HINWEIS: Einige Teile sind nicht für Customer Self Repair ausgelegt. Um den Garantieanspruch des Kunden zu erfüllen, muss das Teil von einem HP Servicepartner ersetzt werden. Im illustrierten Teilekatalog sind diese Teile mit „No“ bzw. „Nein“ gekennzeichnet.

CSR-Teile werden abhängig von der Verfügbarkeit und vom Lieferziel am folgenden Geschäftstag geliefert. Für bestimmte Standorte ist eine Lieferung am selben Tag oder innerhalb von vier Stunden gegen einen Aufpreis verfügbar. Wenn Sie Hilfe benötigen, können Sie das HP technische Support Center

anrufen und sich von einem Mitarbeiter per Telefon helfen lassen. Den Materialien, die mit einem CSR-Ersatzteil geliefert werden, können Sie entnehmen, ob das defekte Teil an HP zurückgeschickt werden muss. Wenn es erforderlich ist, das defekte Teil an HP zurückzuschicken, müssen Sie dies innerhalb eines vorgegebenen Zeitraums tun, in der Regel innerhalb von fünf (5) Geschäftstagen. Das defekte Teil muss mit der zugehörigen Dokumentation in der Verpackung zurückgeschickt werden, die im Lieferumfang enthalten ist. Wenn Sie das defekte Teil nicht zurückschicken, kann HP Ihnen das Ersatzteil in Rechnung stellen. Im Falle von Customer Self Repair kommt HP für alle Kosten für die Lieferung und Rücksendung auf und bestimmt den Kurier-/Frachtdienst.

Weitere Informationen über das HP Customer Self Repair Programm erhalten Sie von Ihrem Servicepartner vor Ort. Informationen über das CSR-Programm in Nordamerika finden Sie auf der HP Website unter (http://www.hp.com/go/selfrepair).

Parts-only Warranty Service (Garantieservice ausschließlich für Teile)

Ihre HP Garantie umfasst möglicherweise einen Parts-only Warranty Service (Garantieservice ausschließlich für Teile). Gemäß den Bestimmungen des Parts-only Warranty Service stellt HP Ersatzteile kostenlos zur Verfügung.

Für den Parts-only Warranty Service ist das CSR-Verfahren zwingend vorgegeben. Wenn Sie den Austausch dieser Teile von HP vornehmen lassen, werden Ihnen die Anfahrt- und Arbeitskosten für diesen Service berechnet.

Reparaciones del propio cliente

Los productos de HP incluyen muchos componentes que el propio usuario puede reemplazar (*Customer Self Repair*, CSR) para minimizar el tiempo de reparación y ofrecer una mayor flexibilidad a la hora de realizar sustituciones de componentes defectuosos. Si, durante la fase de diagnóstico, HP (o los proveedores o socios de servicio de HP) identifica que una reparación puede llevarse a cabo mediante el uso de un componente CSR, HP le enviará dicho componente directamente para que realice su sustitución. Los componentes CSR se clasifican en dos categorías:

- **Obligatorio:** componentes para los que la reparación por parte del usuario es obligatoria. Si solicita a HP que realice la sustitución de estos componentes, tendrá que hacerse cargo de los gastos de desplazamiento y de mano de obra de dicho servicio.
- **Opcional:** componentes para los que la reparación por parte del usuario es opcional. Estos componentes también están diseñados para que puedan ser reparados por el usuario. Sin embargo, si precisa que HP realice su sustitución, puede o no conllevar costes adicionales, dependiendo del tipo de servicio de garantía correspondiente al producto.

NOTA: Algunos componentes no están diseñados para que puedan ser reparados por el usuario. Para que el usuario haga valer su garantía, HP pone como condición que un proveedor de servicios autorizado realice la sustitución de estos componentes. Dichos componentes se identifican con la palabra "No" en el catálogo ilustrado de componentes.

Según la disponibilidad y la situación geográfica, los componentes CSR se enviarán para que lleguen a su destino al siguiente día laborable. Si la situación geográfica lo permite, se puede solicitar la entrega en el mismo día o en cuatro horas con un coste adicional. Si precisa asistencia técnica, puede llamar al

Centro de asistencia técnica de HP y recibirá ayuda telefónica por parte de un técnico. Con el envío de materiales para la sustitución de componentes CSR, HP especificará si los componentes defectuosos deberán devolverse a HP. En aquellos casos en los que sea necesario devolver algún componente a HP, deberá hacerlo en el periodo de tiempo especificado, normalmente cinco días laborables. Los componentes defectuosos deberán devolverse con toda la documentación relacionada y con el embalaje de envío. Si no enviara el componente defectuoso requerido, HP podrá cobrarle por el de sustitución. En el caso de todas sustituciones que lleve a cabo el cliente, HP se hará cargo de todos los gastos de envío y devolución de componentes y escogerá la empresa de transporte que se utilice para dicho servicio.

Para obtener más información acerca del programa de Reparaciones del propio cliente de HP, póngase en contacto con su proveedor de servicios local. Si está interesado en el programa para Norteamérica, visite la página web de HP siguiente (http://www.hp.com/go/selfrepair).

Servicio de garantía exclusivo de componentes

La garantía limitada de HP puede que incluya un servicio de garantía exclusivo de componentes. Según las condiciones de este servicio exclusivo de componentes, HP le facilitará los componentes de repuesto sin cargo adicional alguno.

Para este servicio de garantía exclusivo de componentes, es obligatoria la sustitución de componentes por parte del usuario (CSR). Si solicita a HP que realice la sustitución de estos componentes, tendrá que hacerse cargo de los gastos de desplazamiento y de mano de obra de dicho servicio.

Customer Self Repair

Veel onderdelen in HP producten zijn door de klant zelf te repareren, waardoor de reparatieduur tot een minimum beperkt kan blijven en de flexibiliteit in het vervangen van defecte onderdelen groter is. Deze onderdelen worden CSR-onderdelen (Customer Self Repair) genoemd. Als HP (of een HP Service Partner) bij de diagnose vaststelt dat de reparatie kan worden uitgevoerd met een CSR-onderdeel, verzendt HP dat onderdeel rechtstreeks naar u, zodat u het defecte onderdeel daarmee kunt vervangen. Er zijn twee categorieën CSR-onderdelen:

- **Verplicht:** Onderdelen waarvoor reparatie door de klant verplicht is. Als u HP verzoekt deze onderdelen voor u te vervangen, worden u voor deze service reiskosten en arbeidsloon in rekening gebracht.
- **Optioneel:** Onderdelen waarvoor reparatie door de klant optioneel is. Ook deze onderdelen zijn ontworpen voor reparatie door de klant. Als u echter HP verzoekt deze onderdelen voor u te vervangen, kunnen daarvoor extra kosten in rekening worden gebracht, afhankelijk van het type garantieservice voor het product.

OPMERKING: Sommige HP onderdelen zijn niet ontwikkeld voor reparatie door de klant. In verband met de garantievoorwaarden moet het onderdeel door een geautoriseerde Service Partner worden vervangen. Deze onderdelen worden in de geïllustreerde onderdelencatalogus aangemerkt met "Nee".

Afhankelijk van de leverbaarheid en de locatie worden CSR-onderdelen verzonden voor levering op de eerstvolgende werkdag. Levering op dezelfde dag of binnen vier uur kan tegen meerkosten worden aangeboden, indien dit mogelijk is gezien de locatie. Indien assistentie gewenst is, belt u een HP Service Partner om via de telefoon technische ondersteuning te ontvangen. HP vermeldt in de documentatie bij het vervangende CSR-onderdeel of het defecte onderdeel aan HP moet worden geretourneerd. Als het defecte onderdeel aan HP moet worden teruggezonden, moet u het defecte onderdeel binnen een bepaalde

periode, gewoonlijk vijf (5) werkdagen, retourneren aan HP. Het defecte onderdeel moet met de bijbehorende documentatie worden geretourneerd in het meegeleverde verpakkingsmateriaal. Als u het defecte onderdeel niet terugzendt, kan HP u voor het vervangende onderdeel kosten in rekening brengen. Bij reparatie door de klant betaalt HP alle verzendkosten voor het vervangende en geretourneerde onderdeel en kiest HP zelf welke koerier/transportonderneming hiervoor wordt gebruikt.

Neem contact op met een Service Partner voor meer informatie over het Customer Self Repair programma van HP. Informatie over Service Partners vindt u op de HP website (http://www.hp.com/go/selfrepair).

Garantieservice "Parts Only"

Het is mogelijk dat de HP garantie alleen de garantieservice "Parts Only" omvat. Volgens de bepalingen van de Parts Only garantieservice zal HP kosteloos vervangende onderdelen ter beschikking stellen.

Voor de Parts Only garantieservice is vervanging door CSR-onderdelen verplicht. Als u HP verzoekt deze onderdelen voor u te vervangen, worden u voor deze service reiskosten en arbeidsloon in rekening gebracht.

Reparo feito pelo cliente

Os produtos da HP são projetados com muitas peças para reparo feito pelo cliente (CSR) de modo a minimizar o tempo de reparo e permitir maior flexibilidade na substituição de peças com defeito. Se, durante o período de diagnóstico, a HP (ou fornecedores/parceiros de serviço da HP) concluir que o reparo pode ser efetuado pelo uso de uma peça CSR, a peça de reposição será enviada diretamente ao cliente. Existem duas categorias de peças CSR:

- **Obrigatória** – Peças cujo reparo feito pelo cliente é obrigatório. Se desejar que a HP substitua essas peças, serão cobradas as despesas de transporte e mão-de-obra do serviço.
- **Opcional** – Peças cujo reparo feito pelo cliente é opcional. Essas peças também são projetadas para o reparo feito pelo cliente. No entanto, se desejar que a HP as substitua, pode haver ou não a cobrança de taxa adicional, dependendo do tipo de serviço de garantia destinado ao produto.

OBSERVAÇÃO: Algumas peças da HP não são projetadas para o reparo feito pelo cliente. A fim de cumprir a garantia do cliente, a HP exige que um técnico autorizado substitua a peça. Essas peças estão identificadas com a marca "No" (Não), no catálogo de peças ilustrado.

Conforme a disponibilidade e o local geográfico, as peças CSR serão enviadas no primeiro dia útil após o pedido. Onde as condições geográficas permitirem, a entrega no mesmo dia ou em quatro horas pode ser feita mediante uma taxa adicional. Se precisar de auxílio, entre em contato com o Centro de suporte técnico da HP para que um técnico o ajude por telefone. A HP especifica nos materiais fornecidos com a peça CSR de reposição se a peça com defeito deve ser devolvida à HP. Nos casos em que isso for necessário, é preciso enviar a peça com defeito à HP dentro do período determinado, normalmente cinco (5) dias úteis. A peça com defeito deve ser enviada com a documentação correspondente no material de transporte fornecido. Caso não o faça, a HP poderá cobrar a reposição. Para as peças de reparo feito pelo cliente, a HP paga todas as despesas de transporte e de devolução da peça e determina a transportadora/serviço postal a ser utilizado.

Para obter mais informações sobre o programa de reparo feito pelo cliente da HP, entre em contato com o fornecedor de serviços local. Para o programa norte-americano, visite o site da HP (http://www.hp.com/go/selfrepair).

Serviço de garantia apenas para peças

A garantia limitada da HP pode incluir um serviço de garantia apenas para peças. Segundo os termos do serviço de garantia apenas para peças, a HP fornece as peças de reposição sem cobrar nenhuma taxa.

No caso desse serviço, a substituição de peças CSR é obrigatória. Se desejar que a HP substitua essas peças, serão cobradas as despesas de transporte e mão-de-obra do serviço.

顧客自己修理保証サービス

修理時間を短縮し、故障部品の交換における高い柔軟性を確保するために、HP製品には多数の顧客自己修理（CSR）部品があります。診断の際に、CSR部品を使用すれば修理ができるとHP（HPまたはHP正規保守代理店）が判断した場合、HPはその部品を直接、お客様に発送し、お客様に交換していただきます。CSR部品には以下の2通りがあります。

- 必須 - 顧客自己修理が必須の部品。当該部品について、もしもお客様がHPに交換作業を依頼される場合には、その修理サービスに関する交通費および人件費がお客様に請求されます。
- 任意 - 顧客自己修理が任意である部品。この部品も顧客自己修理用です。当該部品について、もしもお客様がHPに交換作業を依頼される場合には、お買い上げの製品に適用される保証サービス内容の範囲内においては、別途費用を負担していただくことなく保証サービスを受けることができます。

注： HP製品の一部の部品は、顧客自己修理用ではありません。製品の保証を継続するためには、HPまたはHP正規保守代理店による交換作業が必須となります。部品カタログには、当該部品が顧客自己修理除外品である旨が記載されています。

部品供給が可能な場合、地域によっては、CSR部品を翌営業日に届くように発送します。また、地域によっては、追加費用を負担いただくことにより同日または4時間以内に届くように発送することも可能な場合があります。サポートが必要なときは、HPの修理受付窓口に電話していただければ、技術者が電話でアドバイスします。交換用のCSR部品または同梱物には、故障部品をHPに返送する必要があるかどうかが表示されています。故障部品をHPに返送する必要がある場合は、指定期限内（通常は5営業日以内）に故障部品をHPに返送してください。故障部品を返送する場合は、届いた時の梱包箱に関連書類とともに入れてください。故障部品を返送しない場合、HPから部品費用が請求されます。顧客自己修理の際には、HPは送料および部品返送費を全額負担し、使用する宅配便会社や運送会社を指定します。

部品のみ保証サービス

HP保証サービスには、部品のみ保証サービスが適用される場合があります。このサービスでは、交換部品は無償で提供されます。

部品のみ保証サービスにおいては、CSR部品をお客様により交換作業していただくことが必須となります。当該部品について、もしもお客様がHPに交換作業を依頼される場合には、その修理サービスに関する交通費および人件費はお客様の負担となります。

客户自行维修

HP 产品提供许多客户自行维修 (CSR) 部件，以尽可能缩短维修时间和在更换缺陷部件方面提供更大的灵活性。如果在诊断期间 HP（或 HP 服务提供商或服务合作伙伴）确定可以通过使用 CSR 部件完成维修，HP 将直接把该部件发送给您进行更换。有两类 CSR 部件：

- **强制性的** — 要求客户必须自行维修的部件。如果您请求 HP 更换这些部件，则必须为该服务支付差旅费和人工费用。
- **可选的** — 客户可以选择是否自行维修的部件。这些部件也是为客户自行维修设计的。不过，如果您要求 HP 为您更换这些部件，则根据为您的产品指定的保修服务类型，HP 可能收取或不再收取任何附加费用。

注：某些 HP 部件的设计并未考虑客户自行维修。为了满足客户保修的需要，HP 要求授权服务提供商更换相关部件。这些部件在部件图解目录中标记为“否”。

CSR 部件将在下一个工作日发运（取决于备货情况和允许的地理范围）。在允许的地理范围内，可在当天或四小时内发运，但要收取额外费用。如果需要帮助，您可以致电 HP 技术支持中心，将会有技术人员通过电话为您提供帮助。HP 会在随更换的 CSR 部件发运的材料中指明是否必须将有缺陷的部件返还给 HP。如果要求您将有缺陷的部件返还给 HP，那么您必须在规定期限内（通常是五 (5) 个工作日）将缺陷部件发给 HP。有缺陷的部件必须随所提供的发运材料中的相关文件一起返还。如果未能送还有缺陷的部件，HP 可能会要求您支付更换费用。客户自行维修时，HP 将承担所有相关运输和部件返回费用，并指定快递商/承运商。

有关 HP 客户自行维修计划的详细信息，请与您当地的服务提供商联系。有关北美地区的计划，请访问 HP 网站 (http://www.hp.com/go/selfrepair)。

仅部件保修服务

您的 HP 有限保修服务可能涉及仅部件保修服务。根据仅部件保修服务条款的规定，HP 将免费提供更换的部件。

仅部件保修服务要求进行 CSR 部件更换。如果您请求 HP 更换这些部件，则必须为该服务支付差旅费和人工费用。

客戶自行維修

HP 產品設計了許多「客戶自行維修」(CSR) 的零件以減少維修時間，並且使得更換瑕疵零件時能有更大的彈性。如果在診斷期間 HP（或 HP 服務供應商或維修夥伴）辨認出此項維修工作可以藉由使用 CSR 零件來完成，則 HP 將直接寄送該零件給您作更換。CSR 零件分為兩種類別：

- **強制的** — 客戶自行維修所使用的零件是強制性的。如果您要求 HP 更換這些零件，HP 將會向您收取此服務所需的外出費用與勞動成本。
- **選購的** — 客戶自行維修所使用的零件是選購的。這些零件也設計用於客戶自行維修之用。不過，如果您要求 HP 為您更換，則可能需要也可能不需要負擔額外的費用，端視針對此產品指定的保固服務類型而定。

備註：某些 HP 零件沒有消費者可自行維修的設計。為符合客戶保固，HP 需要授權的服務供應商更換零件。這些零件在圖示的零件目錄中，被標示為「否」。

基於材料取得及環境允許的情況下，CSR 零件將於下一個工作日以快遞寄送。在環境的允許下當天或四小時內送達，則可能需要額外的費用。若您需要協助，可致電「HP 技術支援中心」，會有一位技術人員透過電話來協助您。不論損壞的零件是否必須退回，HP 皆會在與 CSR 替換零件一起運送的材料中註明。若要將損壞的零件退回 HP，您必須在指定的一段時間內（通常為五 (5) 個工作天），將損壞的零件寄回 HP。損壞的零件必須與寄送資料中隨附的相關技術文件一併退還。如果無法退還損壞的零件，HP 可能要向您收取替換費用。針對客戶自行維修情形，HP 將負責所有運費及零件退還費用並指定使用何家快遞/貨運公司。

如需 HP 的「客戶自行維修」方案詳細資訊，請連絡您當地的服務供應商。至於北美方案，請參閱 HP 網站 (http://www.hp.com/go/selfrepair)。

僅限零件的保固服務

您的「HP 有限保固」可能包含僅限零件的保固服務。在僅限零件的保固服務情況下，HP 將免費提供替換零件。

針對僅限零件的保固服務，CSR 零件替換是強制性的。如果您要求 HP 更換這些零件，HP 將會向您收取此服務所需的外出費用與勞動成本。

고객 셀프 수리

HP 제품은 수리 시간을 최소화하고 결함이 있는 부품 교체 시 더욱 융통성을 발휘할 수 있도록 하기 위해 고객 셀프 수리(CSR) 부품을 다량 사용하여 설계되었습니다. 진단 기간 동안 HP(또는 HP 서비스 공급업체 또는 서비스 협력업체)에서 CSR 부품을 사용하여 수리가 가능하다고 판단되면 HP는 해당 부품을 바로 사용자에게 보내어 사용자가 교체할 수 있도록 합니다. CSR 부품에는 두 가지 종류가 있습니다.

- **고객 셀프 수리가 의무 사항인 필수 부품.** 사용자가 HP에 이 부품의 교체를 요청할 경우 이 서비스에 대한 출장비 및 작업비가 청구됩니다.
- **고객 셀프 수리가 선택 사항인 부품.** 이 부품들도 고객 셀프 수리가 가능하도록 설계되었습니다. 하지만 사용자가 HP에 이 부품의 교체를 요청할 경우 사용자가 구입한 제품에 해당하는 보증 서비스 유형에 따라 추가 비용 없이 교체가 가능할 수 있습니다.

참고: 일부 HP 부품은 고객 셀프 수리가 불가능하도록 설계되었습니다. HP는 만족스러운 고객 보증을 위해 공인 서비스 제공업체를 통해 부품을 교체하도록 하고 있습니다. 이러한 부품들은 Illustrated Parts Catalog에 "No"라고 표시되어 있습니다.

CSR 부품은 재고 상태와 지리적 조건이 허용하는 경우 다음 영업일 납품이 가능하도록 배송이 이루어집니다. 지리적 조건이 허용하는 경우 추가 비용이 청구되는 조건으로 당일 또는 4시간 배송이 가능할 수도 있습니다. 도움이 필요하시면 HP 기술 지원 센터로 전화하십시오. 전문 기술자가 전화로 도움을 줄 것입니다. HP는 결함이 발생한 부품을 HP로 반환해야 하는지 여부를 CSR 교체 부품과 함께 배송된 자료에 지정합니다. 결함이 발생한 부품을 HP로 반환해야 하는 경우에는 지정된 기간 내(통상 영업일 기준 5일)에 HP로 반환해야 합니다. 이 때 결함이 발생한 부품은 제공된 포장 재료에 넣어 관련 설명서와 함께 반환해야 합니다. 결함이 발생한 부품을 반환하지 않는 경우 HP가 교체 부품에 대해 비용을 청구할 수 있습니다. 고객 셀프 수리의 경우, HP는 모든 운송 및 부품 반환 비용을 부담하며 이용할 운송업체 및 택배 서비스를 결정합니다.

HP 고객 셀프 수리 프로그램에 대한 자세한 내용은 가까운 서비스 제공업체에 문의하십시오. 북미 지역의 프로그램에 대해서는 HP 웹 사이트(http://www.hp.com/go/selfrepair)를 참조하십시오.

부품 제공 보증 서비스

HP 제한 보증에는 부품 제공 보증 서비스가 포함될 수 있습니다. 이러한 경우 HP는 부품 제공 보증 서비스의 조건에 따라 교체 부품만을 무료로 제공합니다.

부품 제공 보증 서비스 제공 시 CSR 부품 교체는 의무 사항입니다. 사용자가 HP에 이 부품의 교체를 요청할 경우 이 서비스에 대한 출장비 및 작업비가 청구됩니다.

Illustrated parts catalog

Server blade components

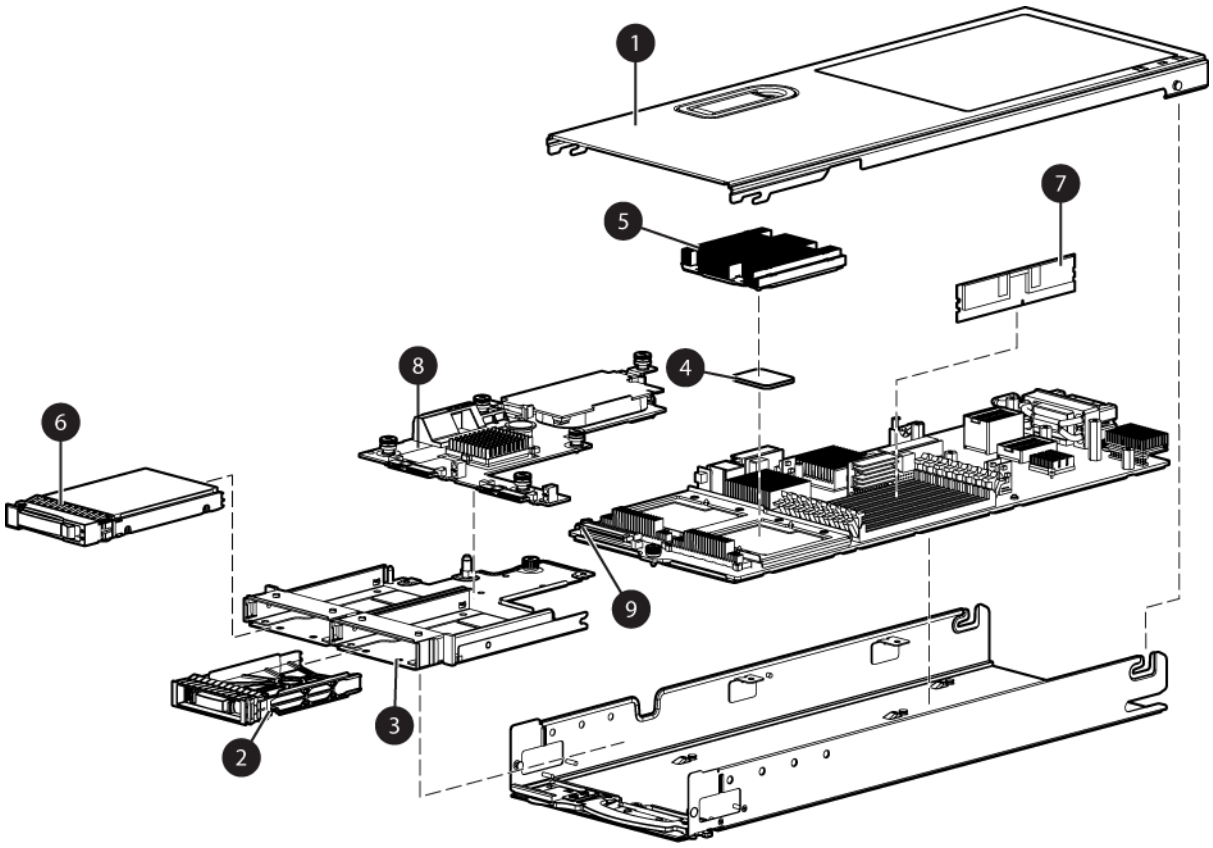

Item	Description	Spare part number	Customer self repair (on page 5)
	Mechanical components		
1	Access panel	410303-001	Mandatory[1]
2	Hard drive blank	392613-001	Mandatory[1]
	System components		
3	Front panel/hard drive cage assembly with front panel LED/board	505864-001	Mandatory[1]
4	Processors	—	—
	a) 2.66-GHz Intel® Xeon® processor L5430, quad-core, 2×6-MB L2 cache, 1333-MHz FSB* **	459735-001	Optional[2]

Item	Description	Spare part number	Customer self repair (on page 5)
	b) 3.00-GHz Intel® Xeon® processor E5450, quad-core, 2×6-MB L2 cache, 1333-MHz FSB* **	457878-001	Optional[2]
	c) 2.5-GHz Intel® Xeon® processor L5420, quad-core, 2×6-MB L2 cache, 1333-MHz FSB* **	463719-001	Optional[2]
5	Heatsink	410304-001	Optional[2]
6	Hard drives	—	—
	a) 36-GB, SAS, SFF, 10,000-rpm	376596-001	Mandatory[1]
	b) 72-GB, SAS, SFF, 10,000-rpm*	376597-001	Mandatory[1]
	c) 60-GB, SATA, SFF, 5,400-rpm*	405419-001	Mandatory[1]
	Boards		
7	FBDIMMs	—	—
	a) 1-GB, PC2-5300, low-power, RoHS*	462837-001	Mandatory[1]
	b) 2-GB, PC2-5300, low-power, RoHS*	455442-001	Mandatory[1]
	c) 4-GB, PC2-5300, low-power, RoHS*	467654-001	Mandatory[1]
8	Hard drive backplane	505553-001	Optional[2]
9	System board	505552-001	Optional[2]
10	Battery-backed write cache components	—	—
	a) Smart Array E200i Controller cache module, 64-MB*	412800-001	Mandatory[1]
	b) Smart Array E200i Controller cache module, 128-MB*	351518-001	Mandatory[1]
	c) Smart Array E200i Controller battery pack*	307132-001	Mandatory[1]
	Miscellaneous		
11	System battery*	234556-001	Optional[2]
12	HP c-Class Blade SUV Cable (Local I/O cable)*	416003-001	Mandatory[1]
13	Fibre Channel mezzanine*	—	—
	a) Emulex LPe1105 FC Mezzanine HBA for HP c-Class BladeSystem	405921-001	Mandatory[1]
	b) Qlogic QMH2462 FC Mezzanine HBA for HP c-Class BladeSystem	405920-001	Mandatory[1]
14	Standard NIC mezzanine*	—	—
	a) HP NC326m PCIe Dual Port 1 Gb HBA for HP c-Class BladeSystem	419330-001	Mandatory[1]
	b) HP NC373m PCIe Dual Port Multifunction 1Gb HBA for HP c-Class BladeSystem	430548-001	Mandatory[1]
15	Hardware and plastics kit*	410302-001	Mandatory[1]
	a) Heatsink blank	—	—
	b) Mezzanine connector covers (2)	—	—

Item	Description	Spare part number	Customer self repair (on page 5)
	c) Processor socket cover	—	—
	d) Hard drive backplane retainer	—	—
16	Server blade handle kit*	434104-001	Optional[2]
	a) Server blade handle	—	—
	b) Release button	—	—
	c) Server blade handle screw, T-15	—	—
	d) Release button screws, T-15 (2)	—	—
	e) Server blade handle nut	—	—

*Not shown
**Do not mix processors with different speeds or cache sizes.
[1]Mandatory—Parts for which customer self repair is mandatory. If you request HP to replace these parts, you will be charged for the travel and labor costs of this service.
[2]Optional—Parts for which customer self repair is optional. These parts are also designed for customer self repair. If, however, you require that HP replace them for you, there may or may not be additional charges, depending on the type of warranty service designated for your product.
[3]No—Some HP parts are not designed for customer self repair. In order to satisfy the customer warranty, HP requires that an authorized service provider replace the part. These parts are identified as "No" in the Illustrated Parts Catalog.

[1]Mandatory: Obligatoire—Pièces pour lesquelles la réparation par le client est obligatoire. Si vous demandez à HP de remplacer ces pièces, les coûts de déplacement et main d'œuvre du service vous seront facturés.
[2]Optional: Facultatif—Pièces pour lesquelles la réparation par le client est facultative. Ces pièces sont également conçues pour permettre au client d'effectuer lui-même la réparation. Toutefois, si vous demandez à HP de remplacer ces pièces, l'intervention peut ou non vous être facturée, selon le type de garantie applicable à votre produit.
[3]No: Non—Certaines pièces HP ne sont pas conçues pour permettre au client d'effectuer lui-même la réparation. Pour que la garantie puisse s'appliquer, HP exige que le remplacement de la pièce soit effectué par un Mainteneur Agréé. Ces pièces sont identifiées par la mention “Non” dans le Catalogue illustré.

[1]Mandatory: Obbligatorie—Parti che devono essere necessariamente riparate dal cliente. Se il cliente ne affida la riparazione ad HP, deve sostenere le spese di spedizione e di manodopera per il servizio.
[2]Optional: Opzionali—Parti la cui riparazione da parte del cliente è facoltativa. Si tratta comunque di componenti progettati per questo scopo. Se tuttavia il cliente ne richiede la sostituzione ad HP, potrebbe dover sostenere spese addizionali a seconda del tipo di garanzia previsto per il prodotto.
[3]No: Non CSR—Alcuni componenti HP non sono progettati per la riparazione da parte del cliente. Per rispettare la garanzia, HP richiede che queste parti siano sostituite da un centro di assistenza autorizzato. Tali parti sono identificate da un “No” nel Catalogo illustrato dei componenti.

[1]Mandatory: Zwingend—Teile, die im Rahmen des Customer Self Repair Programms ersetzt werden müssen. Wenn Sie diese Teile von HP ersetzen lassen, werden Ihnen die Versand- und Arbeitskosten für diesen Service berechnet.
[2]Optional: Optional—Teile, für die das Customer Self Repair-Verfahren optional ist. Diese Teile sind auch für Customer Self Repair ausgelegt. Wenn Sie jedoch den Austausch dieser Teile von HP vornehmen lassen möchten, können bei diesem Service je nach den für Ihr Produkt vorgesehenen Garantiebedingungen zusätzliche Kosten anfallen.
[3]No: Kein—Einige Teile sind nicht für Customer Self Repair ausgelegt. Um den Garantieanspruch des Kunden zu erfüllen, muss das Teil von einem HP Servicepartner ersetzt werden. Im illustrierten Teilekatalog sind diese Teile mit „No“ bzw. „Nein“ gekennzeichnet.

[1]Mandatory: Obligatorio—componentes para los que la reparación por parte del usuario es obligatoria. Si solicita a HP que realice la sustitución de estos componentes, tendrá que hacerse cargo de los gastos de desplazamiento y de mano de obra de dicho servicio.
[2]Optional: Opcional— componentes para los que la reparación por parte del usuario es opcional. Estos componentes también están diseñados para que puedan ser reparados por el usuario. Sin embargo, si precisa que HP realice su sustitución, puede o no conllevar costes adicionales, dependiendo del tipo de servicio de garantía correspondiente al producto.
[3]No: No—Algunos componentes no están diseñados para que puedan ser reparados por el usuario. Para que el usuario haga valer su garantía, HP pone como condición que un proveedor de servicios autorizado realice la sustitución de estos componentes. Dichos componentes se identifican con la palabra “No” en el catálogo ilustrado de componentes.

[1]Mandatory: Verplicht—Onderdelen waarvoor Customer Self Repair verplicht is. Als u HP verzoekt deze onderdelen te vervangen, komen de reiskosten en het arbeidsloon voor uw rekening.
[2]Optional: Optioneel—Onderdelen waarvoor reparatie door de klant optioneel is. Ook deze onderdelen zijn ontworpen voor reparatie door de klant. Als u echter HP verzoekt deze onderdelen voor u te vervangen, kunnen daarvoor extra kosten in rekening worden gebracht, afhankelijk van het type garantieservice voor het product.
[3]No: Nee—Sommige HP onderdelen zijn niet ontwikkeld voor reparatie door de klant. In verband met de garantievoorwaarden moet het onderdeel door een geautoriseerde Service Partner worden vervangen. Deze onderdelen worden in de geïllustreerde onderdelencatalogus aangemerkt met "Nee".

[1]Mandatory: Obrigatória—Peças cujo reparo feito pelo cliente é obrigatório. Se desejar que a HP substitua essas peças, serão cobradas as despesas de transporte e mão-de-obra do serviço.
[2]Optional: Opcional—Peças cujo reparo feito pelo cliente é opcional. Essas peças também são projetadas para o reparo feito pelo cliente. No entanto, se desejar que a HP as substitua, pode haver ou não a cobrança de taxa adicional, dependendo do tipo de serviço de garantia destinado ao produto.
[3]No: Nenhuma—Algumas peças da HP não são projetadas para o reparo feito pelo cliente. A fim de cumprir a garantia do cliente, a HP exige que um técnico autorizado substitua a peça. Essas peças estão identificadas com a marca “No” (Não), no catálogo de peças ilustrado.

[1]Mandatory：必須 - 顧客自己修理が必須の部品。当該部品について、もしもお客様がHPに交換作業を依頼される場合には、その修理サービスに関する交通費および人件費がお客様に請求されます。

[2]Optional：任意 - 顧客自己修理が任意である部品。この部品も顧客自己修理用です。当該部品について、もしもお客様がHPに交換作業を依頼される場合には、お買い上げの製品に適用される保証サービス内容の範囲内においては、費用を負担していただくことなく保証サービスを受けることができます。

[3]No：除外 - HP製品の一部の部品は、顧客自己修理用ではありません。製品の保証を継続するためには、HPまたはHP正規保守代理店による交換作業が必須となります。部品カタログには、当該部品が顧客自己修理除外品である旨が記載されています。

[1]Mandatory: 强制性的 — 要求客户必须自行维修的部件。如果您请求 HP 更换这些部件，则必须为该服务支付差旅费和人工费用。

[2]Optional: 可选的 — 客户可以选择是否自行维修的部件。这些部件也是为客户自行维修设计的。不过，如果您要求 HP 为您更换这些部件，则根据为您的产品指定的保修服务类型，HP 可能收取或不再收取任何附加费用。

[3]No: 否 — 某些 HP 部件的设计并未考虑客户自行维修。为了满足客户保修的需要，HP 要求授权服务提供商更换相关部件。这些部件在部件图解目录中标记为“否”。

[1]Mandatory: 強制的 — 客戶自行維修所使用的零件是強制性的。如果您要求 HP 更換這些零件，HP 將會向您收取此服務所需的外出費用與勞動成本。

[2]Optional: 選購的 — 客戶自行維修所使用的零件是選購的。這些零件也設計用於客戶自行維修之用。不過，如果您要求 HP 為您更換，則可能需要也可能不需要負擔額外的費用，端視針對此產品指定的保固服務類型而定。

[3]No: 否 — 某些 HP 零件沒有消費者可自行維修的設計。為符合客戶保固，HP 需要授權的服務供應商更換零件。這些零件在圖示的零件目錄中，被標示為「否」。

[1] Mandatory: 필수 — 고객 셀프 수리가 의무 사항인 필수 부품. 사용자가 HP에 이 부품의 교체를 요청할 경우 이 서비스에 대한 출장비 및 작업비가 청구됩니다.

[2] Optional: 옵션 — 고객 셀프 수리가 선택 사항인 부품. 이 부품들도 고객 셀프 수리가 가능하도록 설계되었습니다. 하지만 사용자가 HP에 이 부품의 교체를 요청할 경우 사용자가 구입한 제품에 해당하는 보증 서비스 유형에 따라 추가 비용 없이 교체가 가능할 수 있습니다.

[3] No: No — 고객 셀프 수리가 불가능하도록 설계된 HP 부품. 이 부품들은 고객 셀프 수리가 불가능하도록 설계되었습니다. HP는 고객 보증을 만족시키기 위해 공인 서비스 제공업체를 통해 부품을 교체하도록 하고 있습니다.

Removal and replacement procedures

Required tools

You need the following items for some procedures:

- T-15 Torx screwdriver (provided inside the access panel)
- HP Insight Diagnostics software ("HP Insight Diagnostics" on page 50)

Safety considerations

Before performing service procedures, review all the safety information.

Preventing electrostatic discharge

To prevent damaging the system, be aware of the precautions you need to follow when setting up the system or handling parts. A discharge of static electricity from a finger or other conductor may damage system boards or other static-sensitive devices. This type of damage may reduce the life expectancy of the device.

To prevent electrostatic damage:

- Avoid hand contact by transporting and storing products in static-safe containers.
- Keep electrostatic-sensitive parts in their containers until they arrive at static-free workstations.
- Place parts on a grounded surface before removing them from their containers.
- Avoid touching pins, leads, or circuitry.
- Always be properly grounded when touching a static-sensitive component or assembly.

Server blade warnings and cautions

⚠ **WARNING:** To reduce the risk of shock or injury from high-current electrical energy, do not remove the server blade access panel and then install the server blade into the enclosure.

⚠ **WARNING:** To reduce the risk of personal injury from hot surfaces, allow the drives and the internal system components to cool before touching them.

⚠ **CAUTION:** Do not operate the server blade with the access panel removed. Operating the server blade in this manner results in improper airflow and improper cooling that can lead to thermal damage.

△ **CAUTION:** When performing non-hot-plug operations, you must power down the server blade and/or the system. However, it may be necessary to leave the server blade powered up when performing other operations, such as hot-plug installations or troubleshooting.

Symbols on equipment

The following symbols may be placed on equipment to indicate the presence of potentially hazardous conditions.



This symbol indicates the presence of hazardous energy circuits or electric shock hazards. Refer all servicing to qualified personnel.

WARNING: To reduce the risk of injury from electric shock hazards, do not open this enclosure. Refer all maintenance, upgrades, and servicing to qualified personnel.



This symbol indicates the presence of electric shock hazards. The area contains no user or field serviceable parts. Do not open for any reason.

WARNING: To reduce the risk of injury from electric shock hazards, do not open this enclosure.



This symbol on an RJ-45 receptacle indicates a network interface connection.

WARNING: To reduce the risk of electric shock, fire, or damage to the equipment, do not plug telephone or telecommunications connectors into this receptacle.

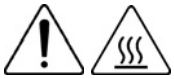

This symbol indicates the presence of a hot surface or hot component. If this surface is contacted, the potential for injury exists.

WARNING: To reduce the risk of injury from a hot component, allow the surface to cool before touching.



6.44 kg
14.20 lb

This symbol indicates that the component exceeds the recommended weight for one individual to handle safely.

WARNING: To reduce the risk of personal injury or damage to the equipment, observe local occupational health and safety requirements and guidelines for manual material handling.



These symbols, on power supplies or systems, indicate that the equipment is supplied by multiple sources of power.

WARNING: To reduce the risk of injury from electric shock, remove all power cords to completely disconnect power from the system.

Server blade preparation

To service any internal server blade component, power down the server blade and remove it from the enclosure.

Power down the server blade

Before powering down the server blade for any upgrade or maintenance procedures, perform a backup of critical server data and programs.

Depending on the Onboard Administrator configuration, use one of the following methods to power down the server blade:

- Use a virtual power button selection through iLO2.

  This method initiates a controlled remote shutdown of applications and the OS before the server blade enter standby mode.

- Press and release the Power On/Standby button.

  This method initiates a controlled shutdown of applications and the OS before the server blade enter standby mode.

- Press and hold the Power On/Standby button for more than 4 seconds to force the server blade to enter standby mode.

  This method forces the server blade to enter standby mode without properly exiting applications and the OS. It provides an emergency shutdown method in the event of a hung application.

- Execute one of the following commands using the Onboard Administrator CLI:

  ```
  poweroff server all
  ```

  or

  ```
  poweroff server all force
  ```

  The first command initiates a controlled shutdown of applications and the OS before the server blade enter standby mode. The second form of the command forces the server blade to enter standby mode without exiting applications and the OS. This is an emergency method to force a shutdown in the event of a hung application.

- Use the Onboard Administrator GUI to initiate a shutdown:

  a. Select the Enclosure Information tab, then select the Overall checkbox in the Device Bays item.

  b. Initiate a shutdown from the Virtual Power menu:

  — Select Momentary Press to initiate a controlled shutdown of applications and the OS.

  — Select Press and Hold to initiate an emergency shutdown of applications and the OS.



IMPORTANT: When the server blade are in standby mode, auxiliary power is still being provided. To remove all power from the server blade, remove the server blade from the enclosure.

After initiating a virtual power down command, be sure that the server blade go into standby mode by observing that the system power LED is amber.

Remove the server blade

To remove the component:

1. Identify the proper server blade.
2. Power down the server blade (on page 23).

3. Remove the server blade.

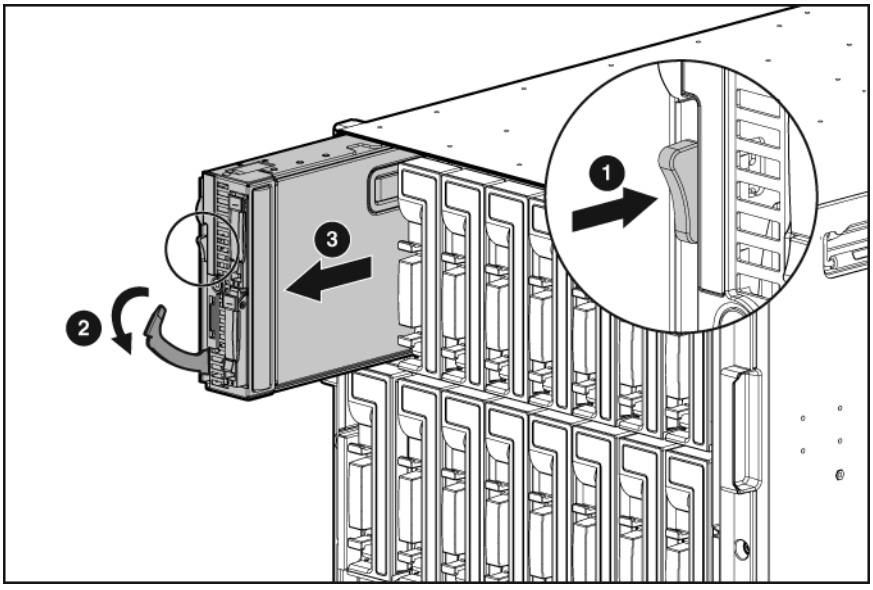

4. Place the server blade on a flat, level work surface.

WARNING: To reduce the risk of personal injury from hot surfaces, allow the drives and the internal system components to cool before touching them.

CAUTION: To prevent damage to electrical components, properly ground the server blade before beginning any installation procedure. Improper grounding can cause ESD.

Access panel

To remove the component:

1. Power down the server blade (on page 23).
2. Remove the server blade (on page 23).
3. Lift the access panel latch and slide the access panel to the rear.
4. Remove the access panel.

WARNING: To reduce the risk of personal injury from hot surfaces, allow the drives and the internal system components to cool before touching them.

CAUTION: To prevent damage to electrical components, properly ground the server blade before beginning any installation procedure. Improper grounding can cause ESD.

To replace the component:

1. Place the access panel on top of the server blade with the hood latch open. Allow the panel to extend past the rear of the server blade approximately 0.8 cm (0.2 in).
2. Engage the anchoring pin with the corresponding hole in the latch.
3. Push down on the hood latch. The access panel slides to a closed position.

Hard drive blank

CAUTION: To prevent improper cooling and thermal damage, do not operate the server blade or the enclosure unless all hard drive and device bays are populated with either a component or a blank.

Remove the component as indicated.

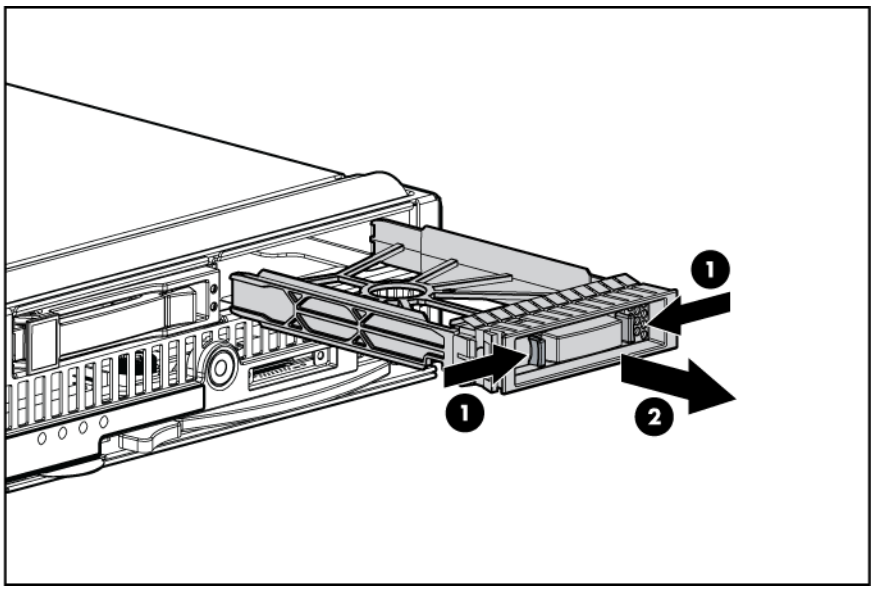

To replace the blank, slide the blank into the bay until it locks into place.

Hard drive

To remove the component:

1. Determine the status of the hard drive from the hot-plug SAS hard drive LED combinations ("SAS and SATA hard drive LED combinations" on page 55).
2. Back up all server data on the hard drive.

3. Remove the hard drive.

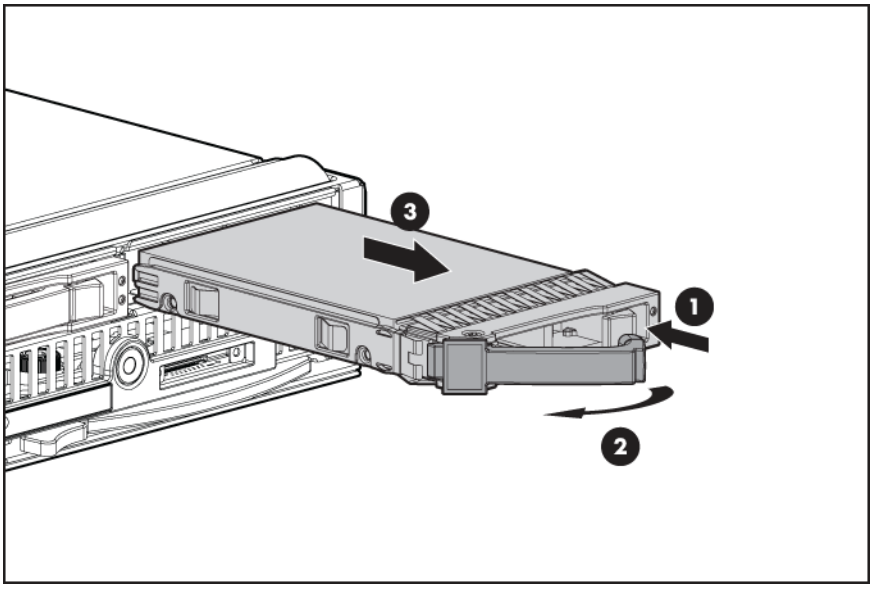

To replace the component:

1. Prepare the hard drive.

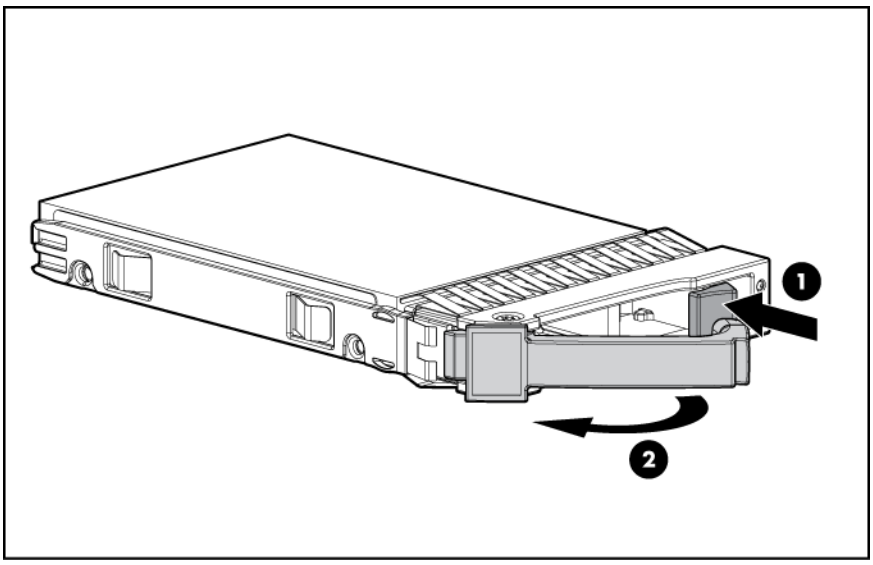

2. Install the hard drive.

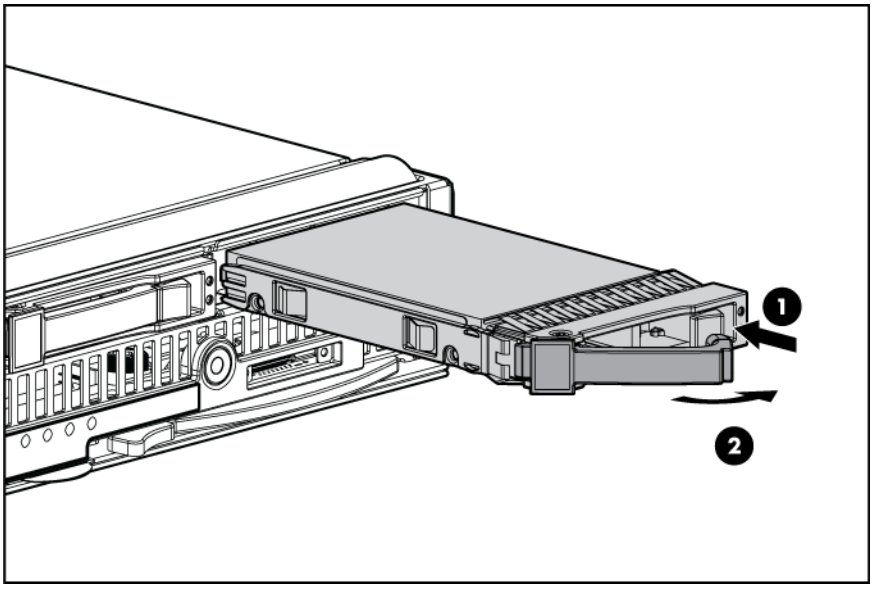

FBDIMM

CAUTION: Use only HP FBDIMMs. FBDIMMs from other sources may adversely affect data integrity.

To remove the component:

1. Power down the server blade (on page 23).
2. Remove the server blade (on page 23).
3. Remove the access panel ("Access panel" on page 24).
4. Remove the FBDIMM.

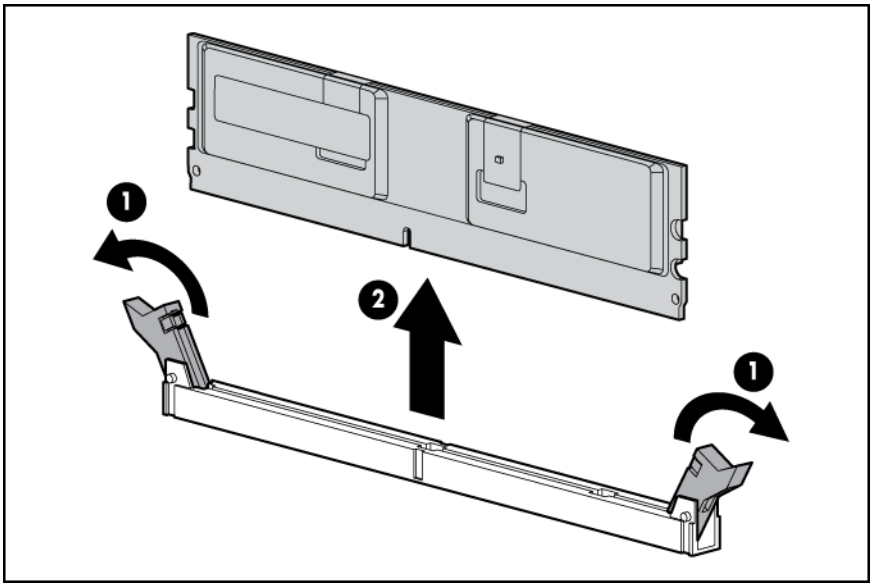

To replace the component, reverse the removal procedure.

Hard drive backplane

Some models of this server blade do not include a hard drive backplane.

To remove the component:

1. Power down the server blade (on page 23).
2. Remove the server blade (on page 23).
3. Remove the access panel ("Access panel" on page 24).
4. Remove all hard drives ("Hard drive" on page 25).
5. Remove all hard drive blanks ("Hard drive blank" on page 25).

> △ **CAUTION:** Remove all hard drives and hard drive blanks before removing the hard drive backplane.

6. Remove the hard drive backplane. Use the backplane retainer to disengage the hard drive backplane from the connector.

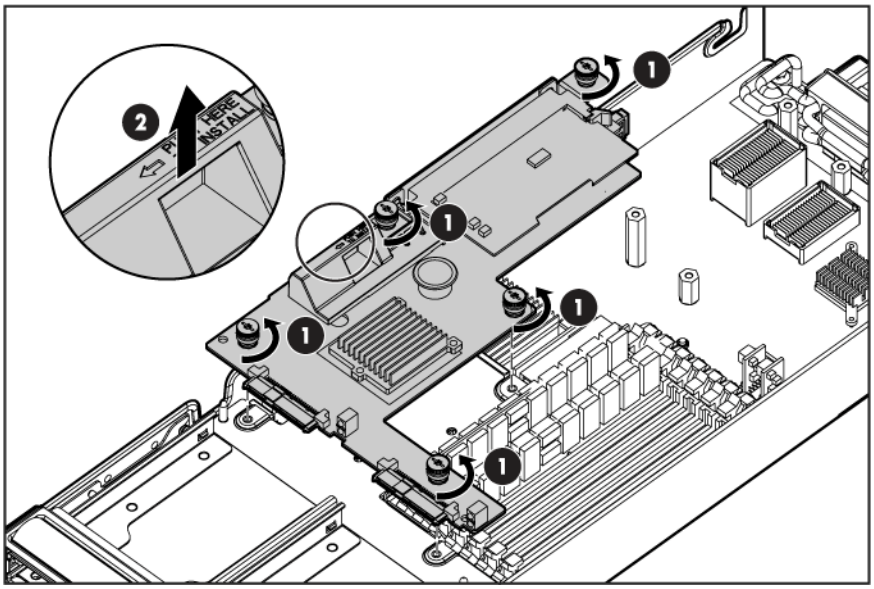

To replace the component:

1. Install the hard drive backplane. Press down on the hard drive backplane retainer to seat the board.

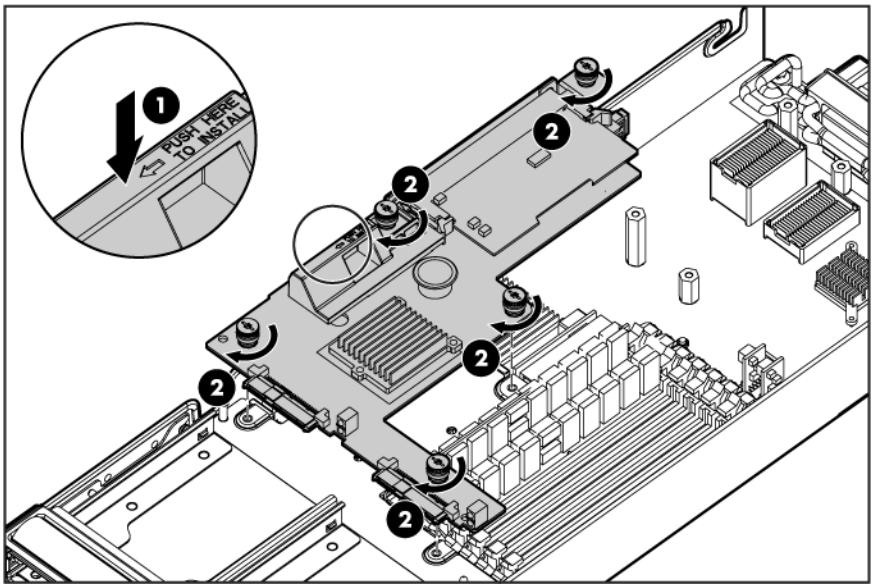

2. Install the hard drives ("Hard drive" on page 25).
3. Install the hard drive blanks ("Hard drive blank" on page 25).
4. Install the access panel ("Access panel" on page 24).
5. Install the server blade.

Hard drive backplane retainer

To remove the component:

1. Power down the server blade (on page 23).
2. Remove the server blade (on page 23).
3. Remove the access panel ("Access panel" on page 24).
4. Remove all hard drives ("Hard drive" on page 25).
5. Remove all hard drive blanks ("Hard drive blank" on page 25).

> △ **CAUTION:** Remove all hard drives and hard drive blanks before removing the hard drive backplane.

6. Remove the hard drive backplane ("Hard drive backplane" on page 28).

7. Remove the hard drive backplane retainer.

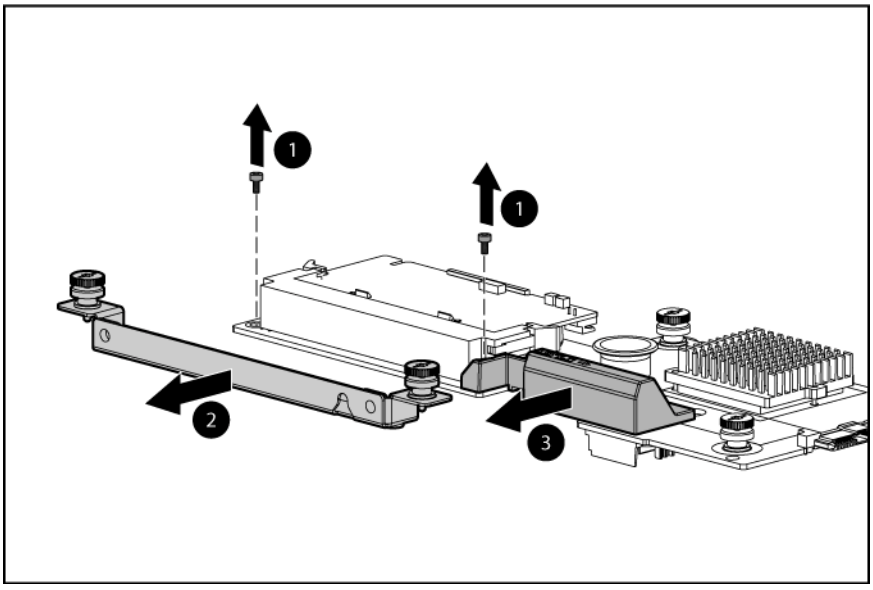

To replace the component:

1. Install the hard drive backplane retainer.

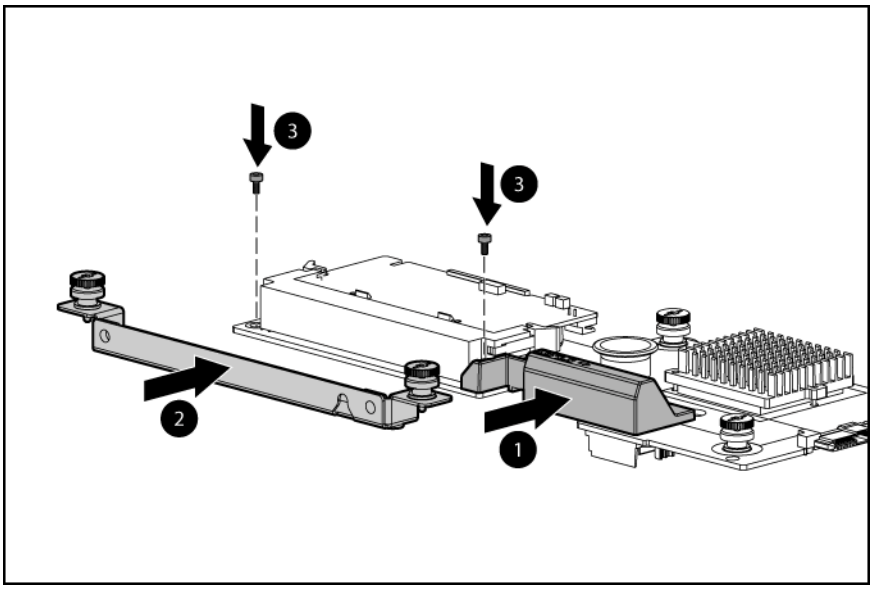

2. Install the hard drive backplane ("Hard drive backplane" on page 28).
3. Install the hard drives ("Hard drive" on page 25).
4. Install the hard drive blanks ("Hard drive blank" on page 25).
5. Install the access panel ("Access panel" on page 24).
6. Install the server blade.

Front panel/hard drive cage assembly

To remove the component:

1. Power down the server blade (on page 23).

2. Remove the server blade (on page 23).
3. Remove the access panel ("Access panel" on page 24).
4. Remove all hard drives ("Hard drive" on page 25).
5. Remove all hard drive blanks ("Hard drive blank" on page 25).
6. Remove the hard drive backplane ("Hard drive backplane" on page 28).
7. Remove the front panel/hard drive cage assembly.

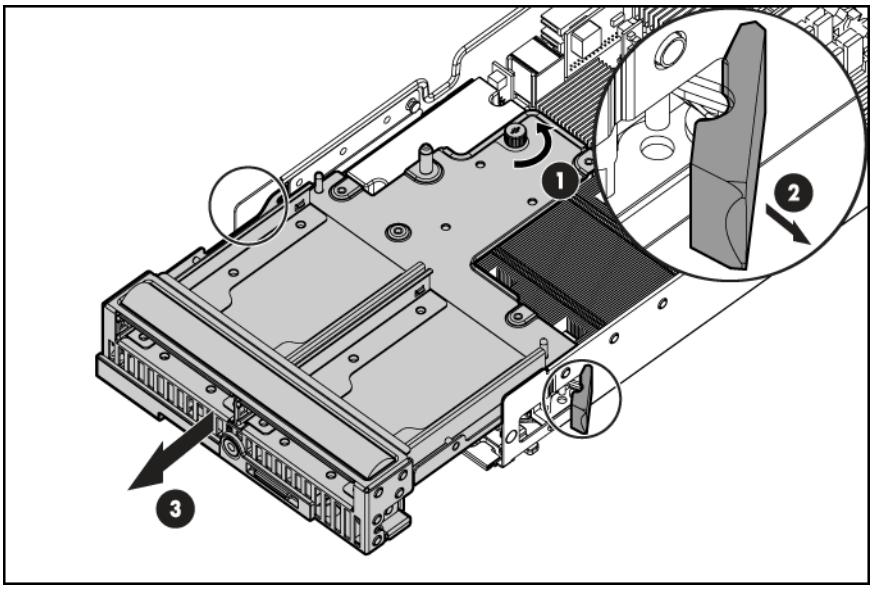

To replace the component, reverse the removal procedure.

Mezzanine card

Optional mezzanine cards enable network connectivity and provide Fibre Channel support. For mezzanine card locations, see the system board components (on page 56).

To remove the component:

1. Power down the server blade (on page 23).
2. Remove the server blade (on page 23).
3. Remove the access panel ("Access panel" on page 24).

4. Remove the mezzanine card.

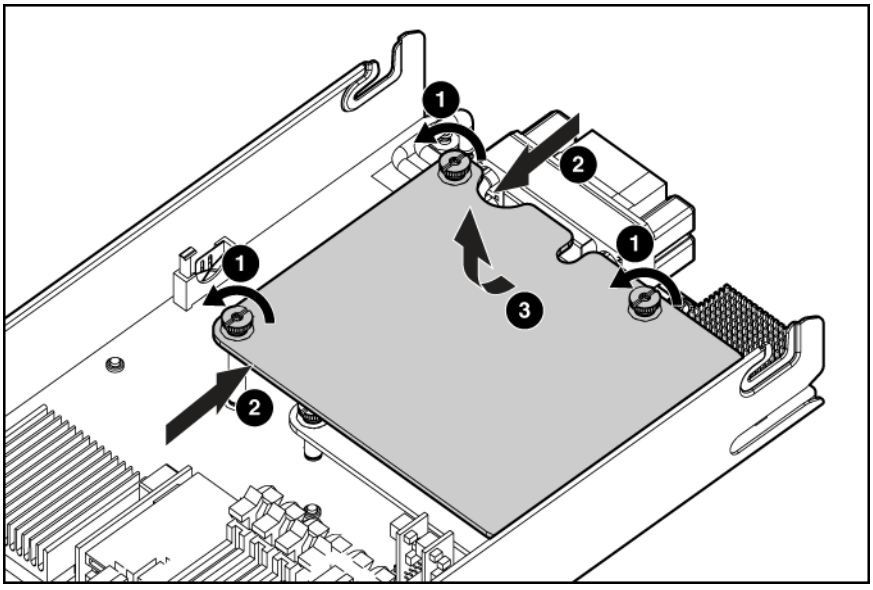

To replace the component:

1. Install the mezzanine card. Press down on the connector to seat the card.

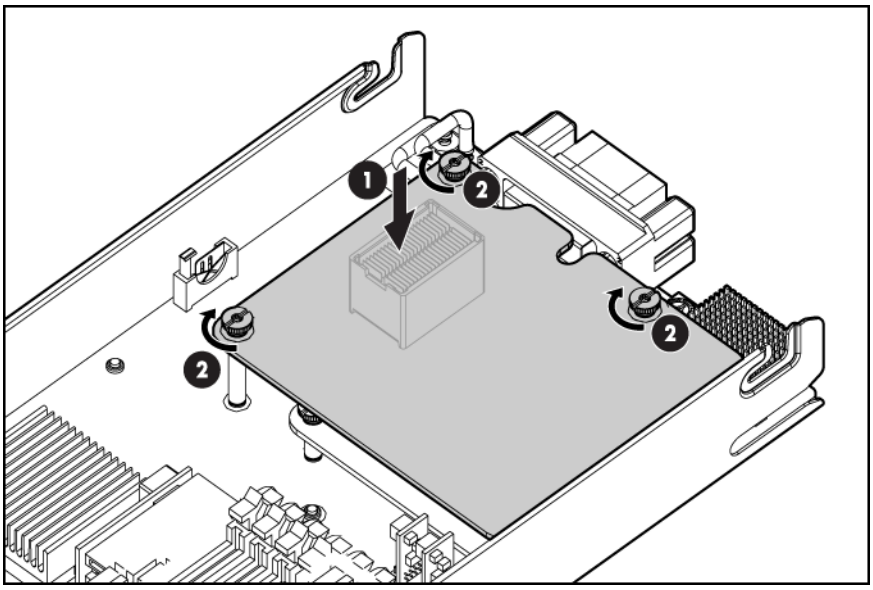

2. Install the access panel ("Access panel" on page 24).
3. Install the server blade.

HP Smart Array E200i Controller cache module

To remove the component:

1. Power down the server blade (on page 23).
2. Remove the server blade (on page 23).
3. Remove the access panel ("Access panel" on page 24).
4. Remove all hard drives ("Hard drive" on page 25).

5. Remove all hard drive blanks ("Hard drive blank" on page 25).
6. Remove the hard drive backplane ("Hard drive backplane" on page 28).
7. Remove the Smart Array E200i Controller cache module.

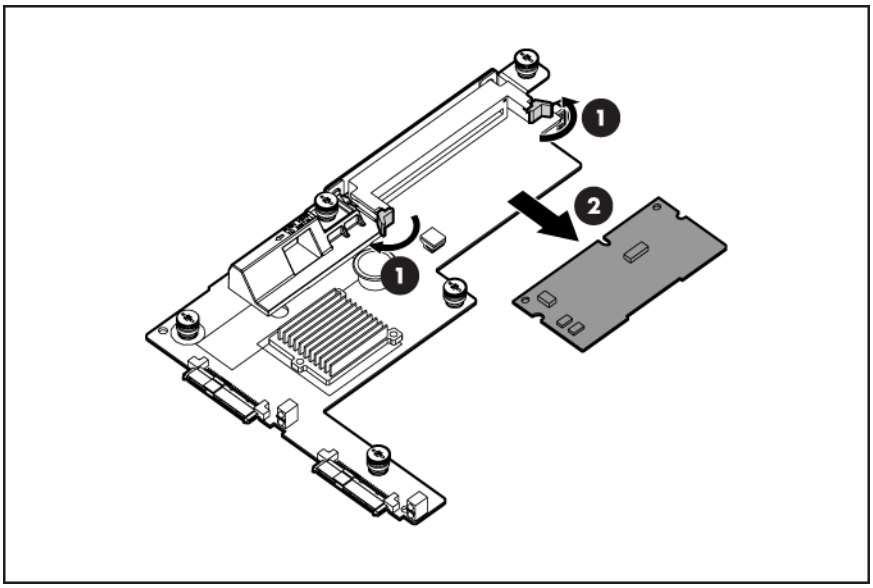

To replace the component, reverse the removal procedure.

HP Smart Array E200i Controller battery pack

To remove the component:

1. Power down the server blade (on page 23).
2. Remove the server blade (on page 23).
3. Remove the access panel ("Access panel" on page 24).
4. Remove all hard drives ("Hard drive" on page 25).
5. Remove all hard drive blanks ("Hard drive blank" on page 25).
6. Remove the hard drive backplane ("Hard drive backplane" on page 28).
7. Remove the Smart Array E200i Controller cache module ("HP Smart Array E200i Controller cache module" on page 32).

8. Remove the Smart Array E200i Controller battery pack.

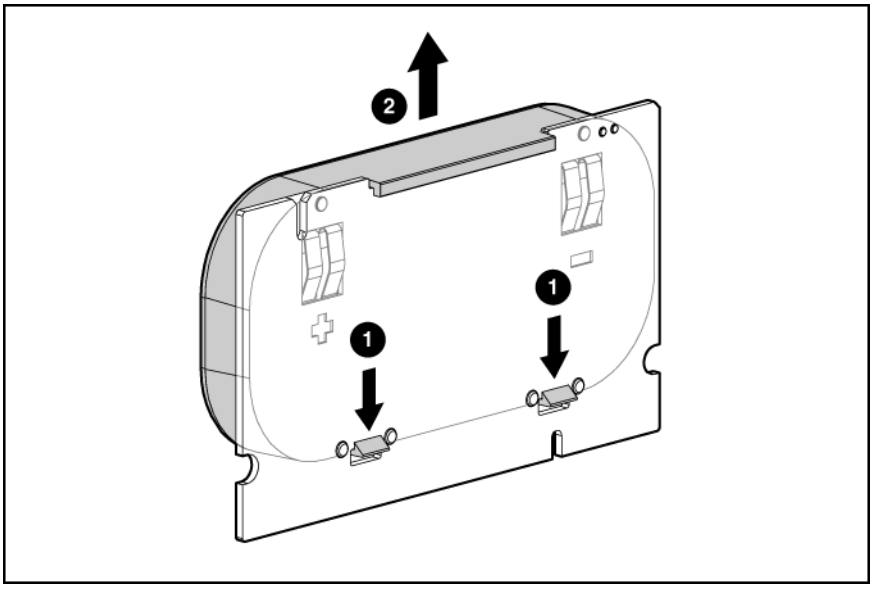

To replace the component, reverse the removal procedure.

Server blade handle

To remove the component:

1. Power down the server blade (on page 23).
2. Remove the server blade (on page 23).
3. Remove the access panel ("Access panel" on page 24).
4. Remove all hard drives ("Hard drive" on page 25).
5. Remove all hard drive blanks ("Hard drive blank" on page 25).
6. Remove the hard drive backplane ("Hard drive backplane" on page 28).
7. Remove the front panel/hard drive cage assembly ("Front panel/hard drive cage assembly" on page 30).

8. Remove the server blade handle.

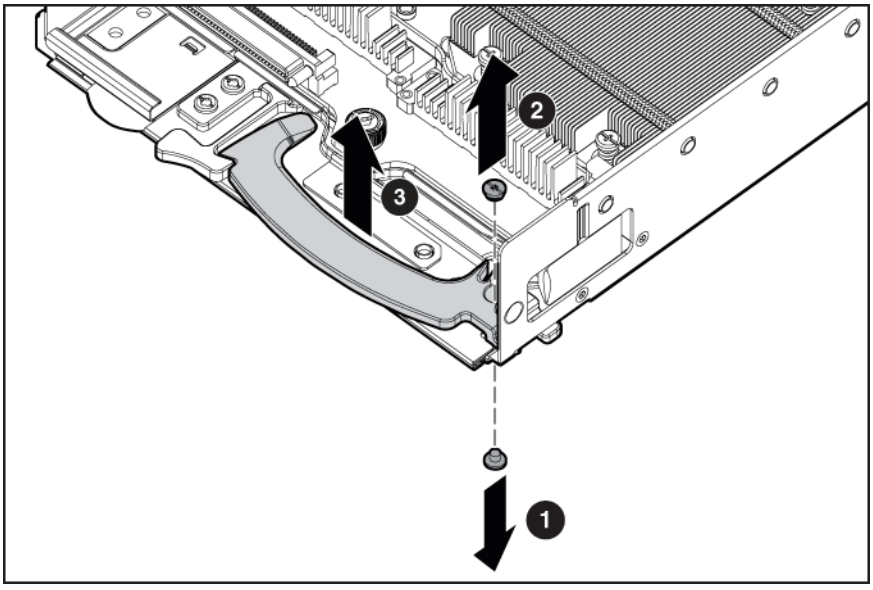

To replace the component, reverse the removal procedure.

Release button

To remove the component:

1. Power down the server blade (on page 23).
2. Remove the server blade (on page 23).
3. Remove the access panel ("Access panel" on page 24).
4. Remove all hard drives ("Hard drive" on page 25).
5. Remove all hard drive blanks ("Hard drive blank" on page 25).
6. Remove the hard drive backplane ("Hard drive backplane" on page 28).
7. Remove the front panel/hard drive cage assembly ("Front panel/hard drive cage assembly" on page 30).

8. Remove the release button.

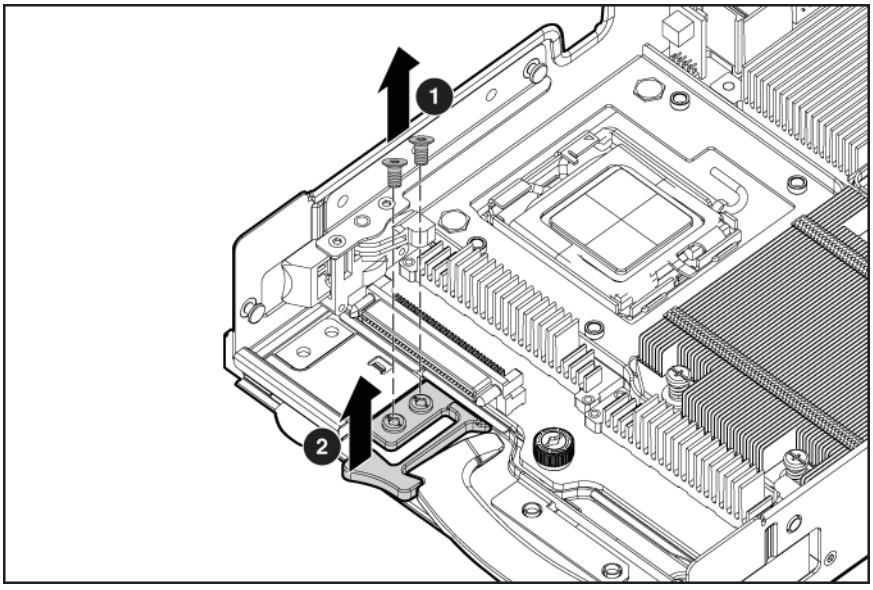

To replace the component, reverse the removal procedure.

Heatsink

⚠ **WARNING:** To reduce the risk of personal injury from hot surfaces, allow the drives and the internal system components to cool before touching them.

To remove the component:

1. Power down the server blade (on page 23).
2. Remove the server blade (on page 23).
3. Remove the access panel ("Access panel" on page 24).
4. Remove all hard drives ("Hard drive" on page 25).
5. Remove all hard drive blanks ("Hard drive blank" on page 25).
6. Remove the hard drive backplane ("Hard drive backplane" on page 28).
7. Remove the front panel/hard drive cage assembly ("Front panel/hard drive cage assembly" on page 30).

8. Remove the heatsink.

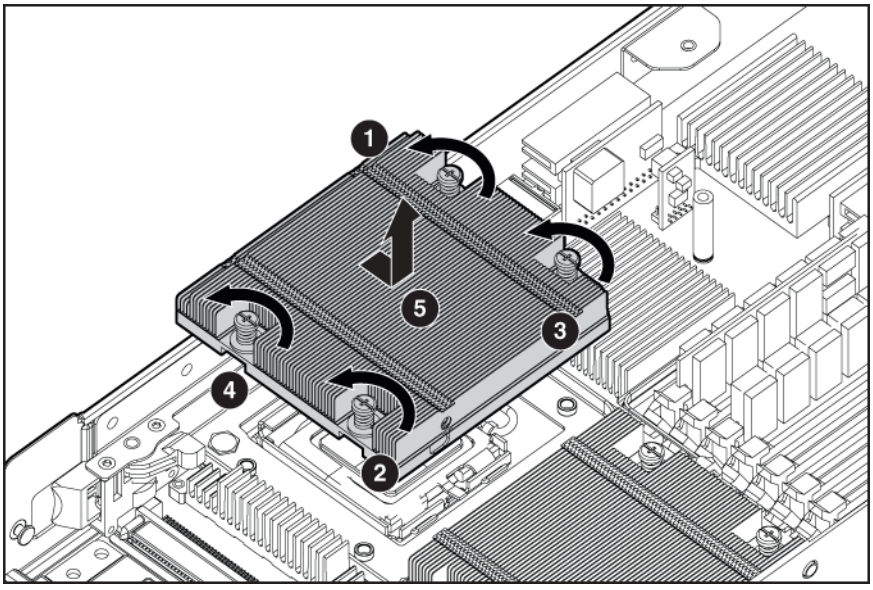

To replace the component:

1. Clean the old thermal grease from the processor with the alcohol swab. Allow the alcohol to evaporate before continuing.
2. Remove the thermal interface protective cover from the heatsink.

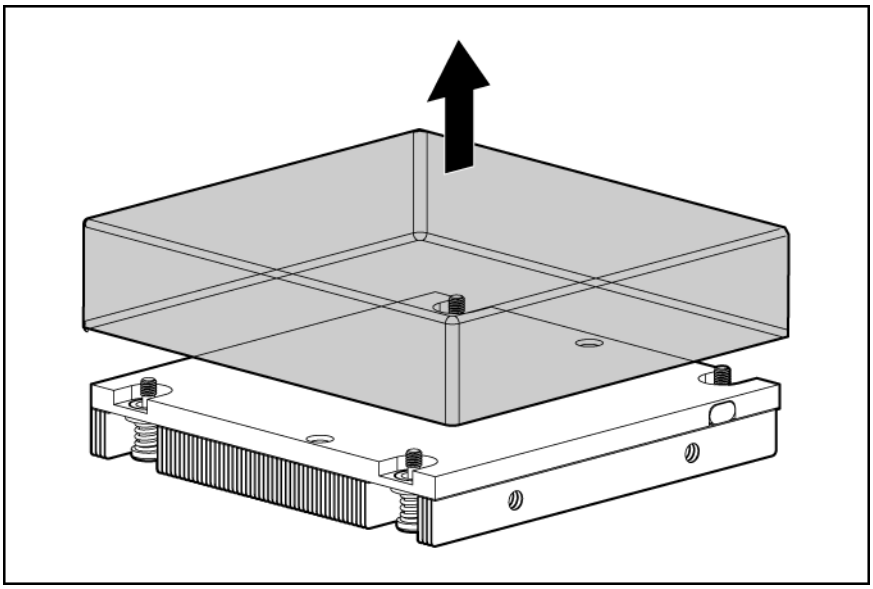

△ **CAUTION:** Heatsink retaining screws should be tightened in diagonally opposite pairs (in an "X" pattern).

3. Install the heatsink.

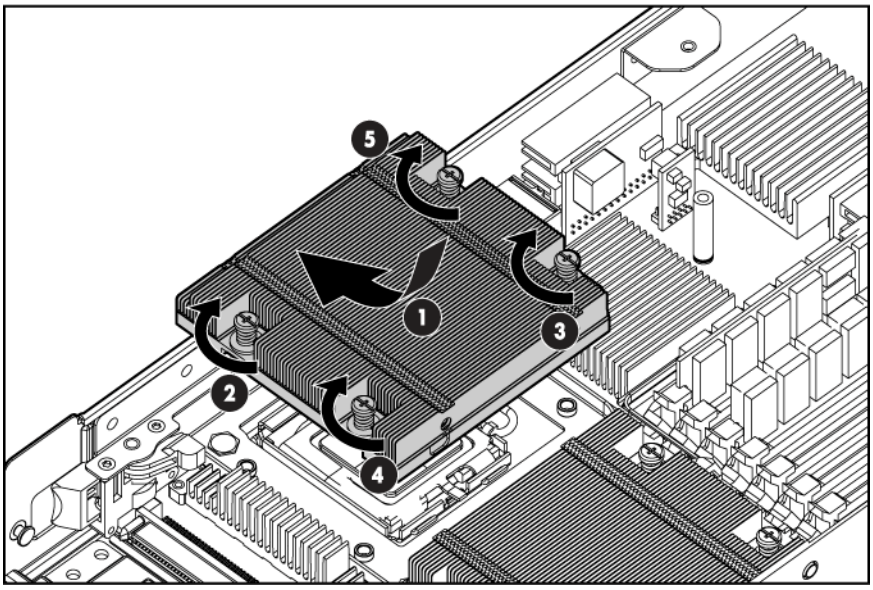

4. Install the front panel/hard drive cage assembly ("Front panel/hard drive cage assembly" on page 30).
5. Install the hard drive backplane ("Hard drive backplane" on page 28).
6. Install the hard drives ("Hard drive" on page 25).
7. Install the hard drive blanks ("Hard drive blank" on page 25).
8. Install the access panel ("Access panel" on page 24).
9. Install the server blade.

Processor

WARNING: To reduce the risk of personal injury from hot surfaces, allow the drives and the internal system components to cool before touching them.

CAUTION: To prevent possible server malfunction, do not mix processors of different speeds or cache sizes. Refer to the label on the processor heatsink for a description of the processor.

CAUTION: To prevent possible server blade overheating, always populate processor socket 2 with a processor and a heatsink or a processor socket cover and a heatsink blank.

IMPORTANT: Processor socket 1 must always be populated. If processor socket 1 is empty, the server blade does not power up.

To remove the component:

1. Power down the server blade (on page 23).
2. Remove the server blade (on page 23).
3. Remove the access panel ("Access panel" on page 24).
4. Remove all hard drives ("Hard drive" on page 25).
5. Remove all hard drive blanks ("Hard drive blank" on page 25).

6. Remove the hard drive backplane ("Hard drive backplane" on page 28).
7. Remove the front panel/hard drive cage assembly ("Front panel/hard drive cage assembly" on page 30).
8. Remove the heatsink ("Heatsink" on page 36).
9. Open the processor retaining latch and the processor socket retaining bracket.

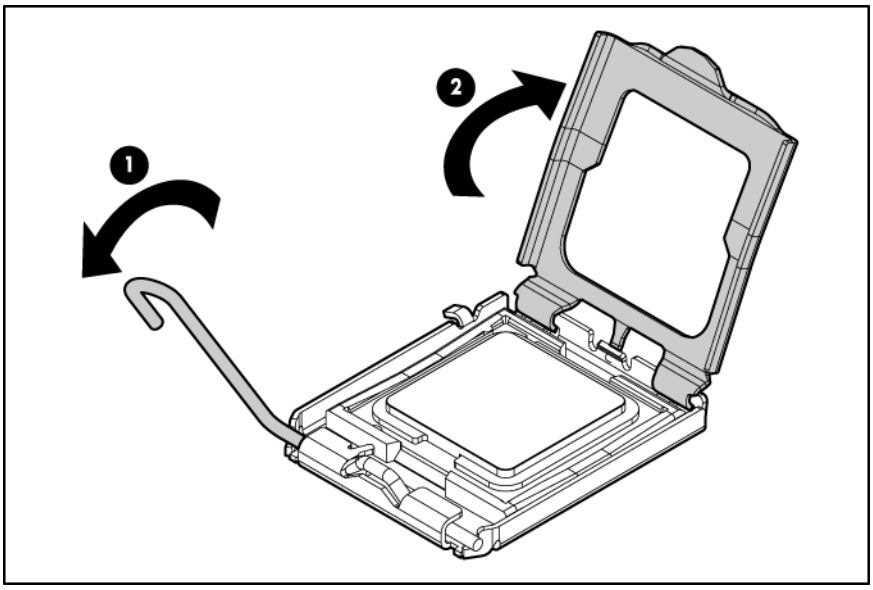

10. Using your fingers, remove the failed processor.

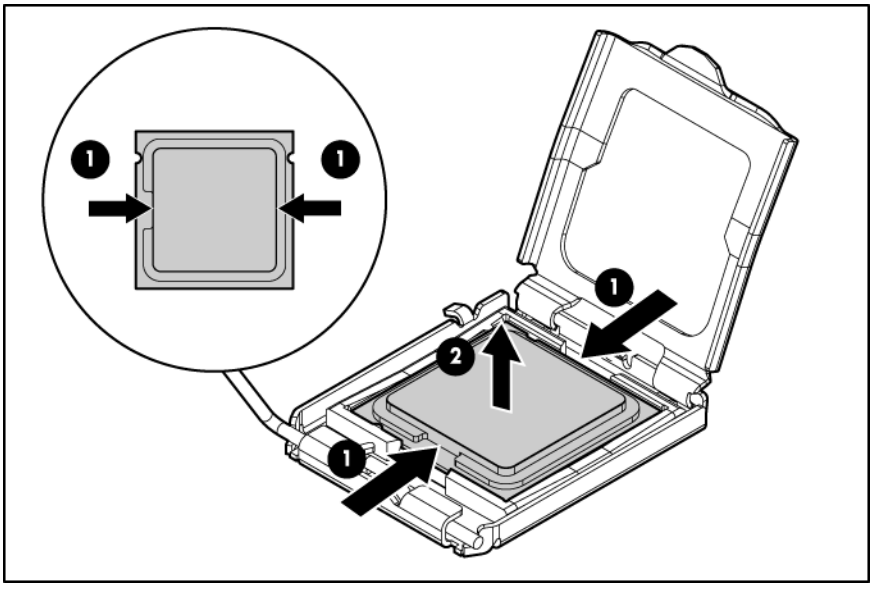

To replace the component:

IMPORTANT: Be sure the processor remains inside the processor installation tool.

1. If the processor has separated from the installation tool, carefully re-insert the processor in the tool.

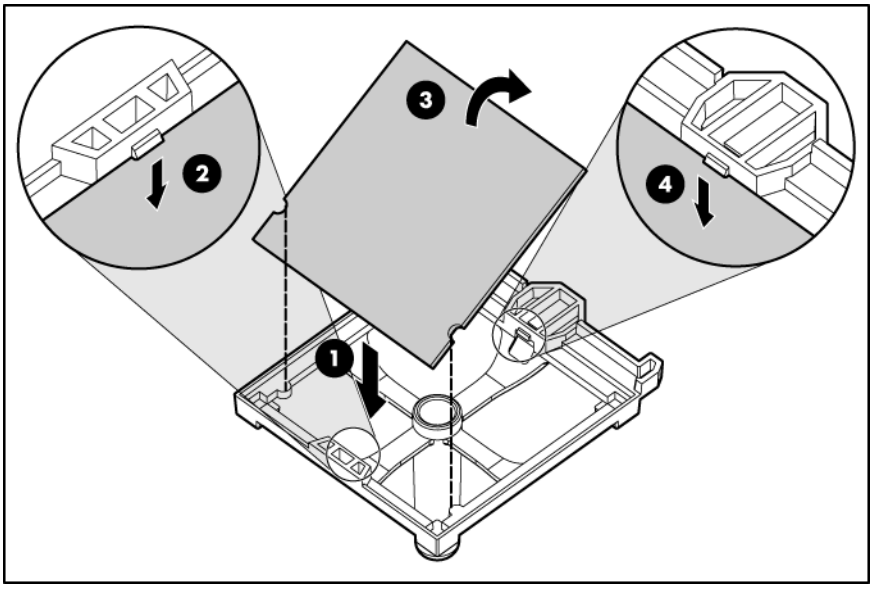

2. Align the processor installation tool with the socket and install the spare processor.

△ **CAUTION:** The processor is designed to fit one way into the socket. Use the alignment guides on the processor and socket to properly align the processor with the socket. Refer to the server blade hood label for specific instructions.

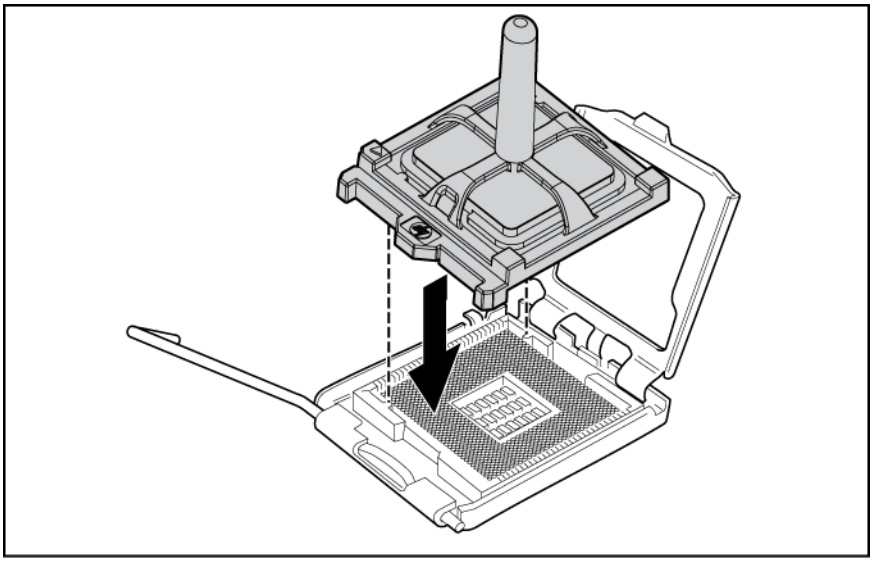

3. Press down firmly until the processor installation tool clicks and separates from the processor, and then remove the processor installation tool.

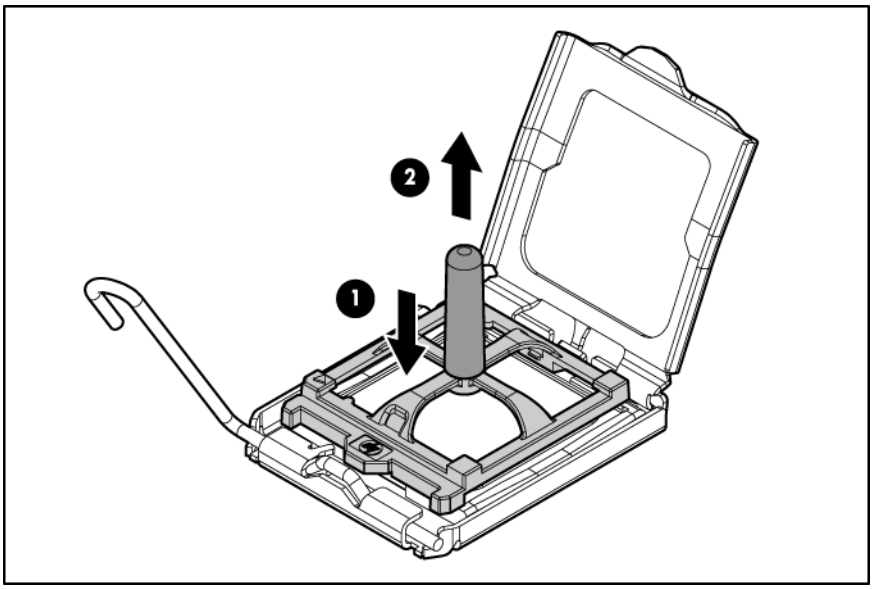

4. Close the processor retaining latch and the processor socket retaining bracket.

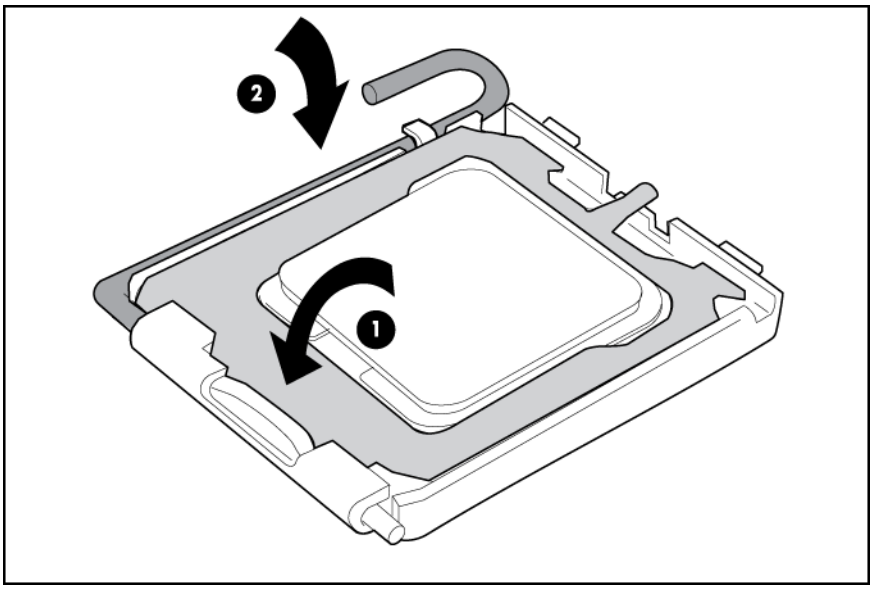

5. Clean the old thermal grease from the heatsink with the alcohol swab. Allow the alcohol to evaporate before continuing.

6. Apply all the grease to the top of the processor in one of the following patterns to ensure even distribution:

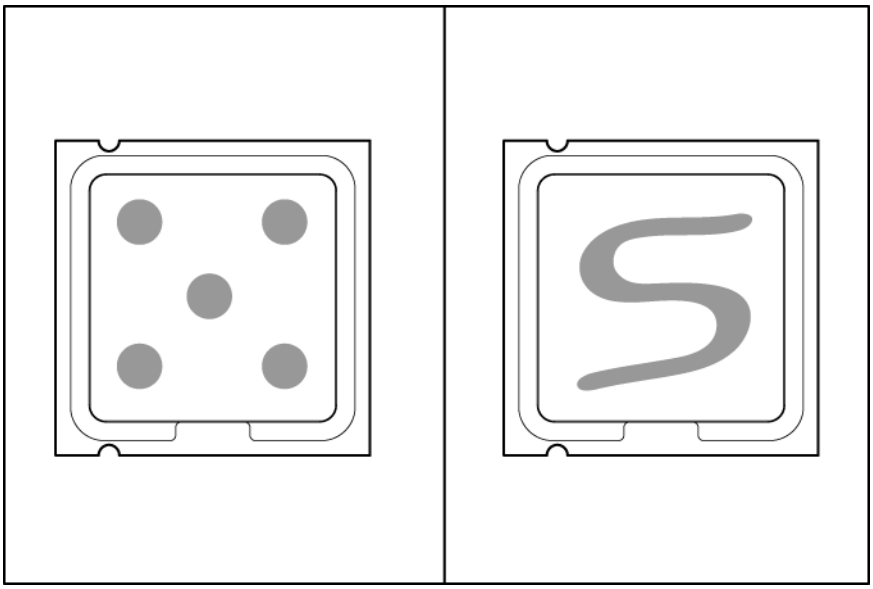

△ **CAUTION:** Heatsink retaining screws should be tightened in diagonally opposite pairs (in an "X" pattern).

7. Install the heatsink.

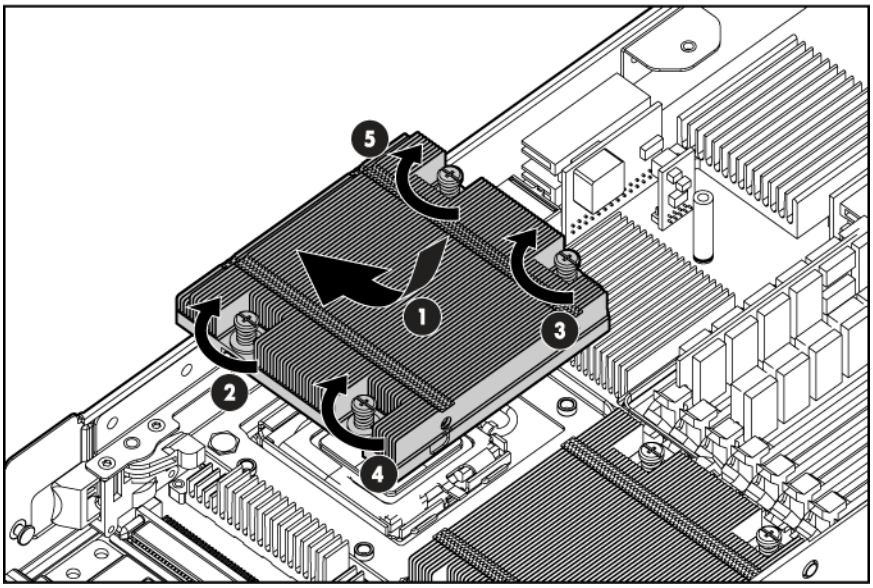

8. Install the front panel/hard drive cage assembly ("Front panel/hard drive cage assembly" on page 30).
9. Install the hard drive backplane ("Hard drive backplane" on page 28).
10. Install the hard drive blanks ("Hard drive blank" on page 25).
11. Install the hard drives ("Hard drive" on page 25).
12. Install the access panel ("Access panel" on page 24).
13. Install the server blade.

System board

To remove the component:

1. Power down the server blade (on page 23).
2. Remove the server blade (on page 23).
3. Remove the access panel ("Access panel" on page 24).
4. Remove all hard drives ("Hard drive" on page 25).
5. Remove all hard drive blanks ("Hard drive blank" on page 25).
6. Remove the hard drive backplane ("Hard drive backplane" on page 28).
7. Remove the front panel/hard drive cage assembly ("Front panel/hard drive cage assembly" on page 30).
8. Remove all FBDIMMs ("FBDIMM" on page 27).
9. Remove any mezzanine cards ("Mezzanine card" on page 31).
10. Remove the heatsink ("Heatsink" on page 36).
11. Open the processor retaining latch and the processor socket retaining bracket.

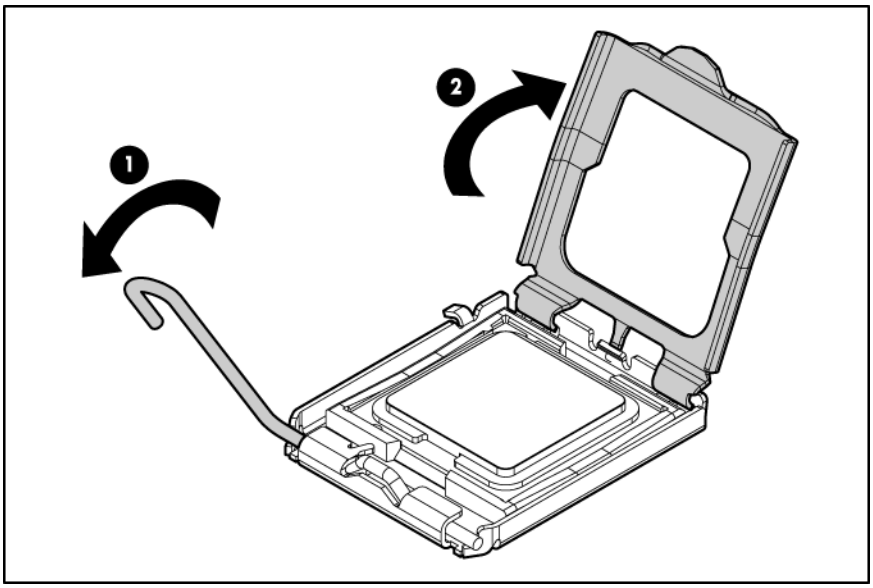

CAUTION: To avoid damage to the processor:

- Handle the processor only by the edges.
- Do not touch the bottom of the processor, especially the contact area.

12. Using your fingers, remove the processor from the failed system board.

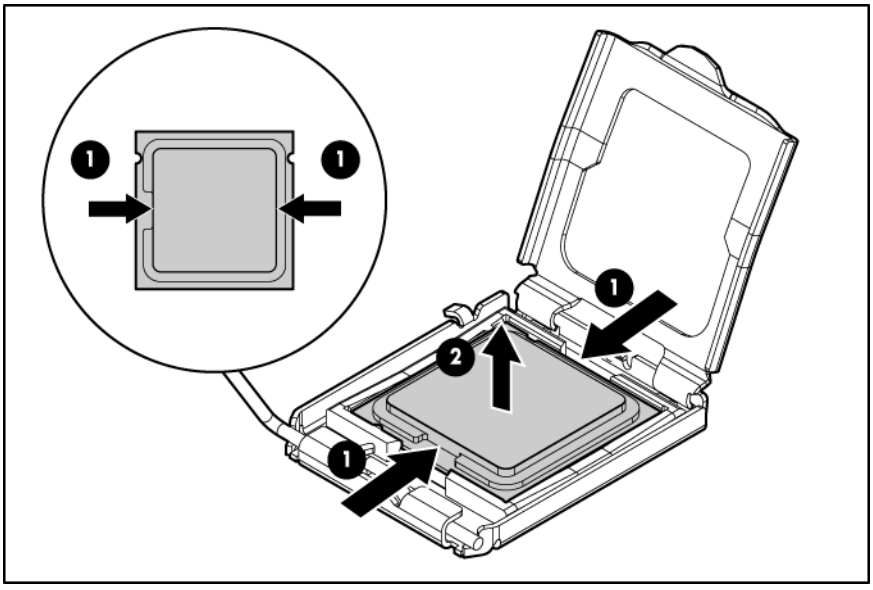

△ **CAUTION:** To avoid damage to the system board:

- Do not touch the processor socket contacts.
- Always install the processor socket cover after removing the processor from the socket.
- Do not tilt or slide the processor when lowering the processor into the socket.

13. Remove the system board assembly.

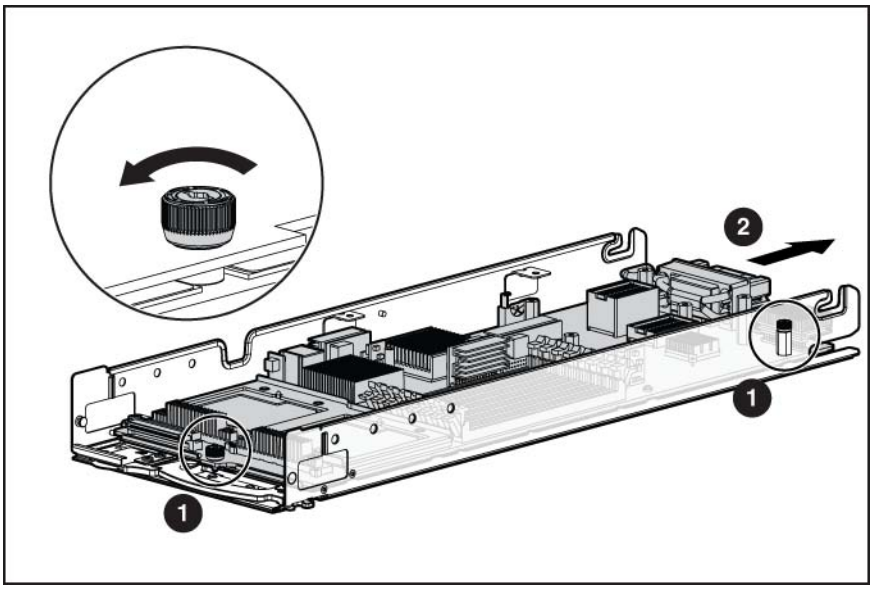

To replace the system board:

1. Install the spare system board.

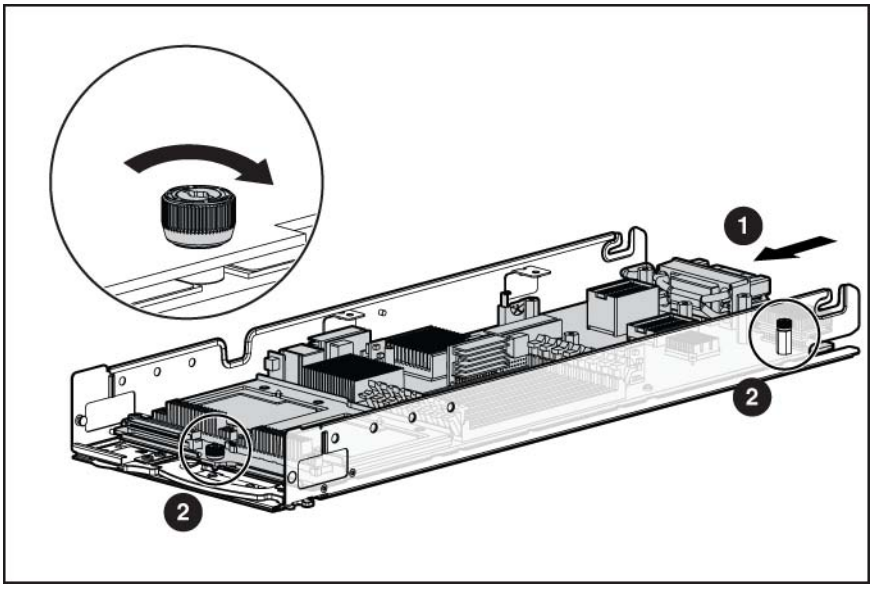

2. Prepare the processor socket on the spare system board:
   a. Open the processor retaining latch and the processor socket retaining bracket.

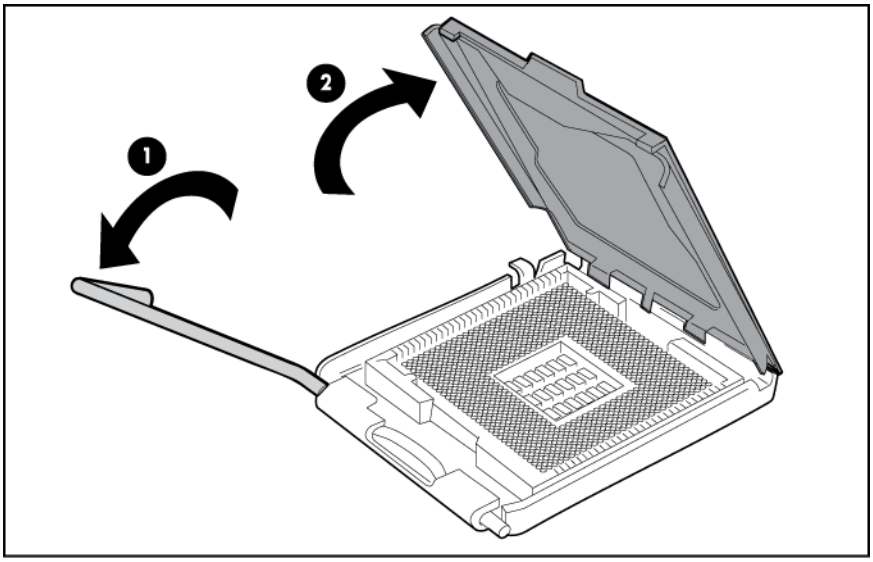

b. Remove the processor socket protective cover.

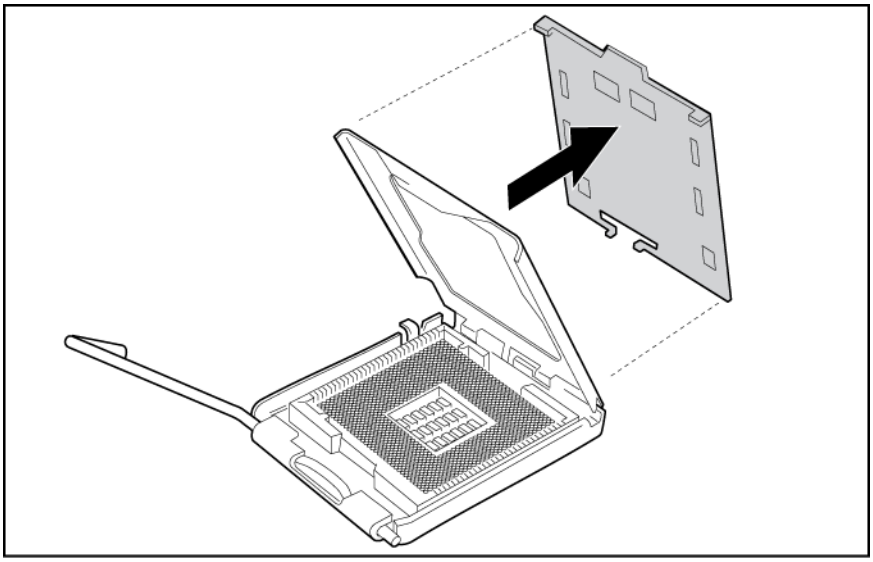

3. Install the processor socket cover onto the processor socket of the failed system board.
4. Install the processor on the spare system board.

> **CAUTION:** The processor is designed to fit one way into the socket. Use the alignment guides on the processor and socket to properly align the processor with the socket. Refer to the server blade hood label for specific instructions.

> **CAUTION:** Always install the processor parallel to the system board to avoid damage to the pins.

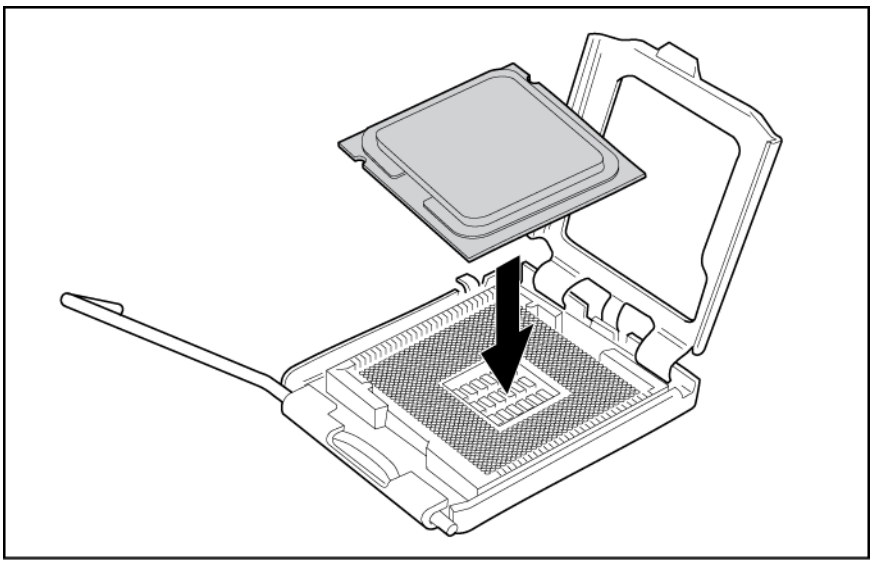

5. Close the processor retaining latch and the processor socket retaining bracket.

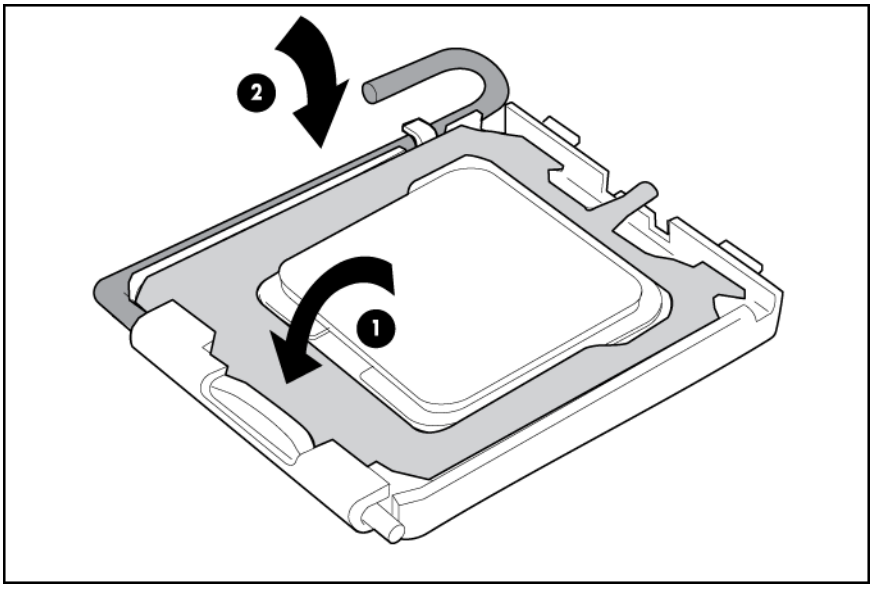

6. Clean the old thermal grease from the heatsink and the top of the processor with the alcohol swab. Allow the alcohol to evaporate before continuing.
7. Apply all the grease to the top of the processor in one of the following patterns to ensure even distribution:

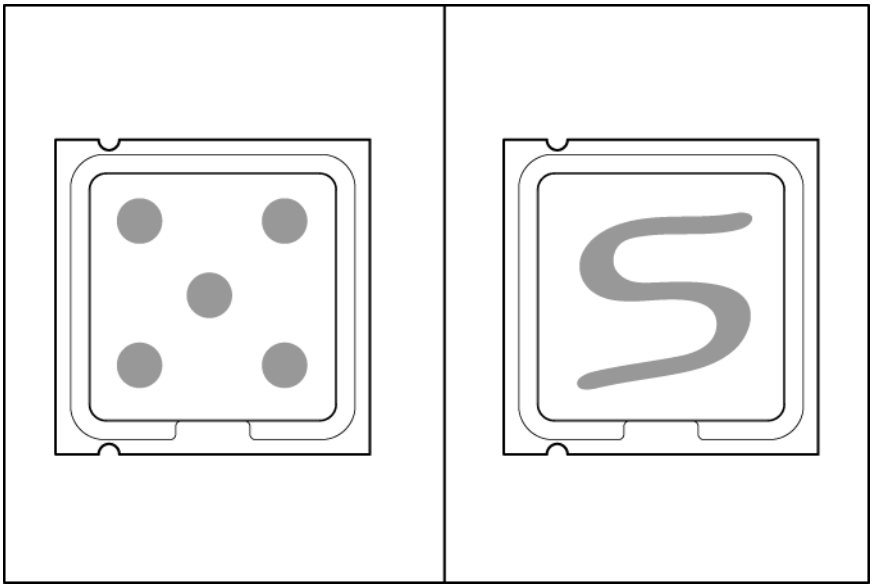

8. Install the heatsink ("Heatsink" on page 36).

IMPORTANT: Install all components with the same configuration that was used on the failed system board.

9. Install all components removed from the failed system board.
10. Install the hard drives ("Hard drive" on page 25).
11. Install the hard drive blanks ("Hard drive blank" on page 25).
12. Install the access panel ("Access panel" on page 24).
13. Power up the server blade.

After you replace the system board, you must re-enter the server serial number and the product ID.

1. During the server startup sequence, press the **F9** key to access RBSU.
2. Select the **System Options** menu.
3. Select **Serial Number**. The following warning is displayed:

   ```
   WARNING! WARNING! WARNING! The serial number is loaded into the system
   during the manufacturing process and should NOT be modified. This option
   should only be used by qualified service personnel. This value should
   always match the serial number sticker located on the chassis.
   ```

4. Press the **Enter** key to clear the warning.
5. Enter the serial number and press the **Enter** key.
6. Select **Product ID**.
7. Enter the product ID and press the **Enter** key.
8. Press the **Esc** key to close the menu.
9. Press the **Esc** key to exit RBSU.
10. Press the **F10** key to confirm exiting RBSU. The server will automatically reboot.

System battery

If the server blade no longer automatically displays the correct date and time, you may need to replace the battery that provides power to the real-time clock. Under normal use, battery life is 5 to 10 years.

⚠ **WARNING:** The computer contains an internal lithium manganese dioxide, a vanadium pentoxide, or an alkaline battery pack. A risk of fire and burns exists if the battery pack is not properly handled. To reduce the risk of personal injury:

- Do not attempt to recharge the battery.
- Do not expose the battery to temperatures higher than 60°C (140°F).
- Do not disassemble, crush, puncture, short external contacts, or dispose of in fire or water.
- Replace only with the spare designated for this product.

To remove the component:

1. Power down the server blade (on page 23).
2. Remove the server blade (on page 23).
3. Remove the access panel ("Access panel" on page 24).
4. Remove all hard drives ("Hard drive" on page 25).
5. Remove all hard drive blanks ("Hard drive blank" on page 25).
6. Remove the hard drive backplane ("Hard drive backplane" on page 28).
7. Remove the front panel/hard drive cage assembly ("Front panel/hard drive cage assembly" on page 30).

8. Remove the system board.

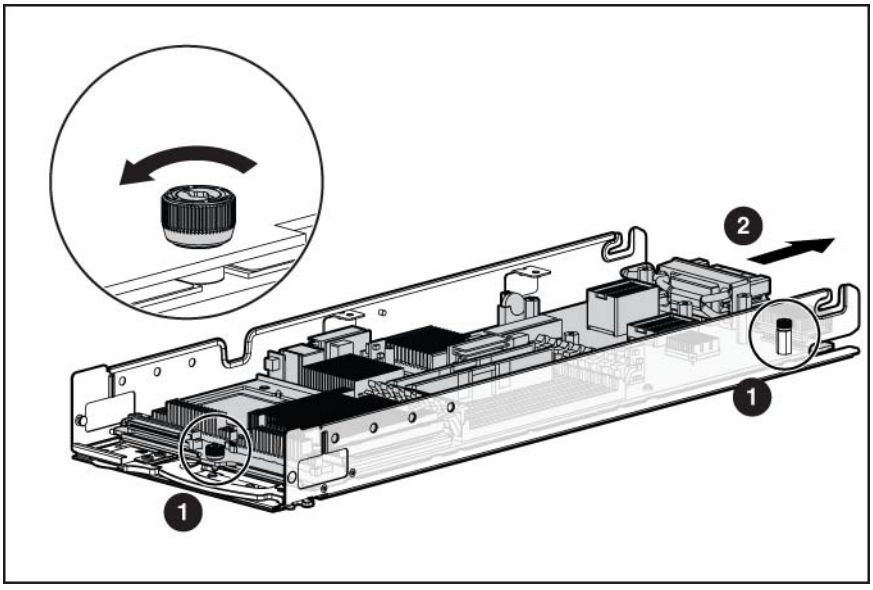

9. Identify the battery location ("System board components" on page 56).
10. Remove the battery.

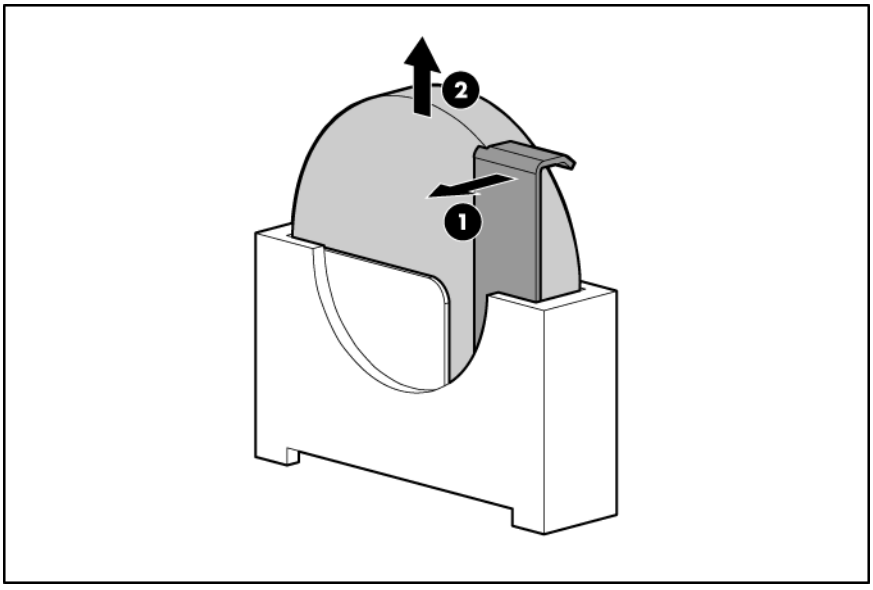

IMPORTANT: Replacing the system board battery resets the system ROM to its default configuration. After replacing the battery, reconfigure the system through RBSU.

To replace the component, reverse the removal procedure.

Diagnostic tools

Troubleshooting resources

The *HP ProLiant Servers Troubleshooting Guide* provides procedures for resolving common problems and comprehensive courses of action for fault isolation and identification, error message interpretation, issue resolution, and software maintenance on ProLiant servers and server blades. This guide includes problem-specific flowcharts to help you navigate complex troubleshooting processes. To view the guide, select a language:

- English (http://www.hp.com/support/ProLiant_TSG_en)
- French (http://www.hp.com/support/ProLiant_TSG_fr)
- Italian (http://www.hp.com/support/ProLiant_TSG_it)
- Spanish (http://www.hp.com/support/ProLiant_TSG_sp)
- German (http://www.hp.com/support/ProLiant_TSG_gr)
- Dutch (http://www.hp.com/support/ProLiant_TSG_nl)
- Japanese (http://www.hp.com/support/ProLiant_TSG_jp)

The *HP BladeSystem c-Class Enclosure Troubleshooting Guide* provides procedures and solutions for troubleshooting HP BladeSystem c-Class enclosures. This guide explains how to use the Insight Display to troubleshoot enclosures, and it includes a flowchart to help you navigate the troubleshooting process. To view the guide, see the HP website (http://www.hp.com/support/BladeSystem_Enclosure_TSG_en).

HP Insight Diagnostics

HP Insight Diagnostics is a proactive server blade management tool, available in both offline and online versions, that provides diagnostics and troubleshooting capabilities to assist IT administrators who verify server blade installations, troubleshoot problems, and perform repair validation.

HP Insight Diagnostics Offline Edition performs various in-depth system and component testing while the OS is not running. To run this utility, launch the SmartStart CD.

HP Insight Diagnostics Online Edition is a web-based application that captures system configuration and other related data needed for effective server blade management. Available in Microsoft® Windows® and Linux versions, the utility helps to ensure proper system operation.

For more information or to download the utility, refer to the HP website (http://www.hp.com/servers/diags).

HP Insight Diagnostics survey functionality

HP Insight Diagnostics (on page 50) provides survey functionality that gathers critical hardware and software information on ProLiant server blades.

This functionality supports operating systems that may not be supported by the server blade. For operating systems supported by the server blade, see the HP website (http://www.hp.com/go/supportos).

If a significant change occurs between data-gathering intervals, the survey function marks the previous information and overwrites the survey data files to reflect the latest changes in the configuration.

Survey functionality is installed with every SmartStart-assisted HP Insight Diagnostics installation, or it can be installed through the HP PSP.

NOTE: The current version of SmartStart provides the memory spare part numbers for the server blade. To download the latest version, see the HP website (http://www.hp.com/support).

Integrated Management Log

The IML records hundreds of events and stores them in an easy-to-view form. The IML timestamps each event with 1-minute granularity.

You can view recorded events in the IML in several ways, including the following:

- From within HP SIM ("HP Systems Insight Manager" on page 51)
- From within Survey Utility
- From within operating system-specific IML viewers
  - For NetWare: IML Viewer
  - For Windows®: IML Viewer
  - For Linux: IML Viewer Application
- From within the iLO2 user interface
- From within HP Insight Diagnostics (on page 50)

For more information, refer to the Management CD in the HP ProLiant Essentials Foundation Pack.

Array Diagnostic Utility

The HP Array Diagnostics Utility is a web-based application that creates a report of all HP storage controllers and disk drives. This report provides vital information to assist in identifying faults or conditions that may require attention. ADU can be accessed from the SmartStart CD or downloaded from the HP website (http://www.hp.com).

HP Systems Insight Manager

HP SIM is a web-based application that allows system administrators to accomplish normal administrative tasks from any remote location, using a web browser. HP SIM provides device management capabilities that consolidate and integrate management data from HP and third-party devices.

IMPORTANT: You must install and use HP SIM to benefit from the Pre-Failure Warranty for processors, SAS and SATA hard drives, and memory modules.

For additional information, refer to the Management CD in the HP ProLiant Essentials Foundation Pack or the HP SIM website (http://www.hp.com/go/hpsim).

HP Instant Support Enterprise Edition

ISEE is a proactive remote monitoring and diagnostic tool to help manage your systems and devices, a feature of HP support. ISEE provides continuous hardware event monitoring and automated notification to identify and prevent potential critical problems. Through remote diagnostic scripts and vital system configuration information collected about your systems, ISEE enables fast restoration of your systems. Install ISEE on your systems to help mitigate risk and prevent potential critical problems.

For more information on ISEE, refer to the HP website (http://www.hp.com/hps/hardware/hw_enterprise.html).

To download HP ISEE, visit the HP website (http://www.hp.com/hps/hardware/hw_downloads.html).

For installation information, refer to the HP ISEE Client Installation and Upgrade Guide (ftp://ftp.hp.com/pub/services/hardware/info/isee_client.pdf).

Web-Based Enterprise Service

WEBES enables administrators to manage hardware events proactively, either locally or online. The service provides real-time multiple event analysis, crash analysis, and notification, locally through SMTP and remotely through ISEE for OpenVMS, Tru64, and Microsoft® Windows® operating system binary error logs.

For more information, refer to the HP website (http://h18000.www1.hp.com/support/svctools/).

Open Services Event Manager

OSEM is a standalone tool that performs real-time reactive and proactive service event filtering, analysis, and notification. The tool gathers event data from SNMP traps or information provided over an HTTP interface and notifies an administrator or HP through SMTP and ISEE.

For more information, refer to the HP website (http://h18000.www1.hp.com/support/svctools/).

Component identification

Front panel components

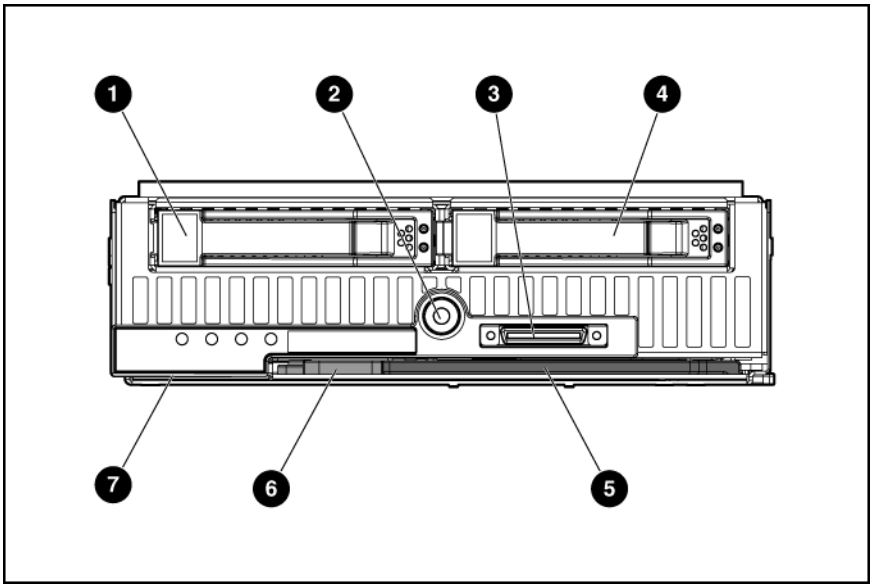

Item	Description
1	Hard drive bay 1
2	Power On/Standby button
3	SUV connector*
4	Hard drive bay 2
5	Server blade handle
6	Release button
7	Serial label pull tab

* The SUV connector and the HP c-Class Blade SUV cable are for some server blade configuration and diagnostic procedures.

Front panel LEDs

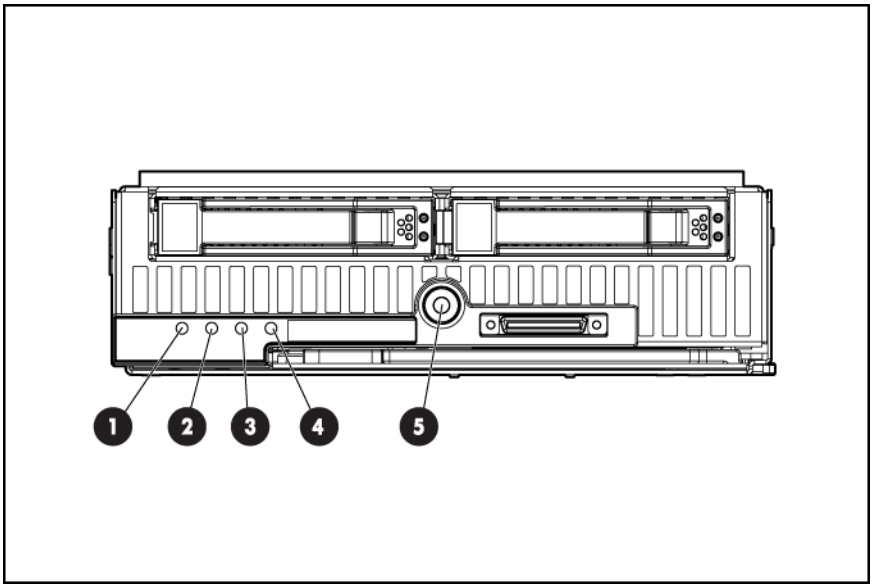

Item	Description	Status
1	UID LED	Blue = Identified Blue flashing = Active remote management Off = No active remote management
2	Health LED	Green = Normal Flashing = Booting Amber = Degraded condition Red = Critical condition
3	NIC 1 LED*	Green = Network linked Green flashing = Network activity Off = No link or activity
4	NIC 2 LED*	Green = Network linked Green flashing = Network activity Off = No link or activity
5	System power LED	Green = On Amber = Standby (auxiliary power available) Off = Off

* Actual NIC numbers depend on several factors, including the operating system installed on the server blade.

SAS and SATA hard drive LEDs

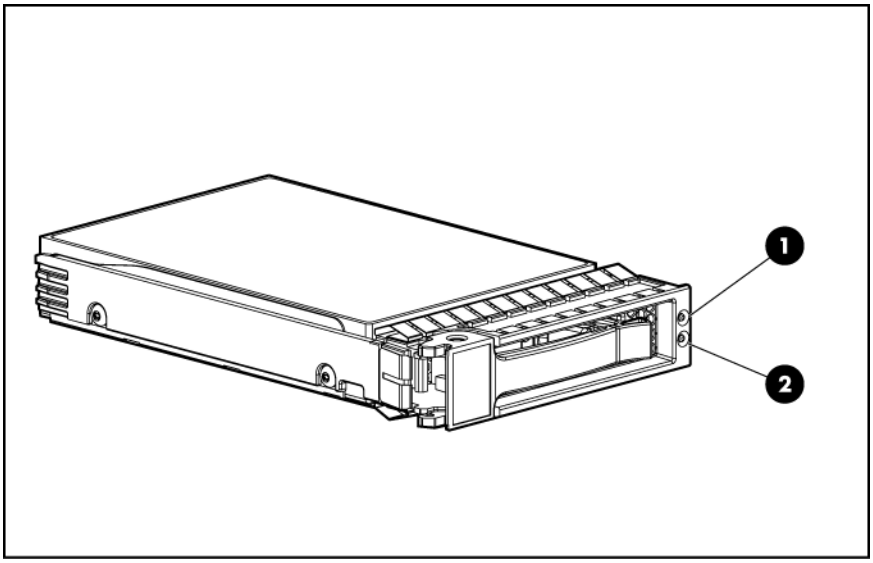

Item	Description
1	Fault/UID LED (amber/blue)
2	Online LED (green)

SAS and SATA hard drive LED combinations

Online/activity LED (green)	Fault/UID LED (amber/blue)	Interpretation
On, off, or flashing	Alternating amber and blue	The drive has failed, or a predictive failure alert has been received for this drive; it also has been selected by a management application.
On, off, or flashing	Steadily blue	The drive is operating normally, and it has been selected by a management application.
On	Amber, flashing regularly (1 Hz)	A predictive failure alert has been received for this drive. Replace the drive as soon as possible.
On	Off	The drive is online, but it is not active currently.
Flashing regularly (1 Hz)	Amber, flashing regularly (1 Hz)	**Do not remove the drive. Removing a drive may terminate the current operation and cause data loss.** The drive is part of an array that is undergoing capacity expansion or stripe migration, but a predictive failure alert has been received for this drive. To minimize the risk of data loss, do not replace the drive until the expansion or migration is complete.
Flashing regularly (1 Hz)	Off	**Do not remove the drive. Removing a drive may terminate the current operation and cause data loss.** The drive is rebuilding, erasing, or it is part of an array that is undergoing capacity expansion or stripe migration.

Online/activity LED (green)	Fault/UID LED (amber/blue)	Interpretation
Flashing irregularly	Amber, flashing regularly (1 Hz)	The drive is active, but a predictive failure alert has been received for this drive. Replace the drive as soon as possible.
Flashing irregularly	Off	The drive is active, and it is operating normally.
Off	Steadily amber	A critical fault condition has been identified for this drive, and the controller has placed it offline. Replace the drive as soon as possible.
Off	Amber, flashing regularly (1 Hz)	A predictive failure alert has been received for this drive. Replace the drive as soon as possible.
Off	Off	The drive is offline, a spare, or not configured as part of an array.

System board components

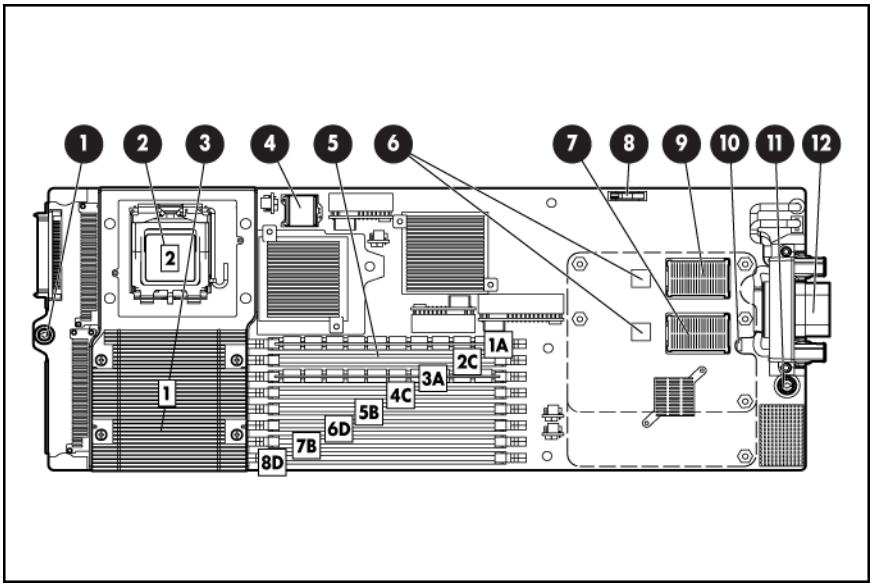

Item	Description
1	System board thumbscrew
2	Processor socket 2
3	Processor socket 1 (populated)
4	Hard drive backplane connector
5	FBDIMMs (8)
6	Embedded NICs (2)
7	Mezzanine connector 1 [Type I mezzanine only (shown)]
8	Battery
9	Mezzanine connector 2 [Type I (shown) or Type II mezzanine]
10	System maintenance switch (SW2)
11	System board thumbscrew

Item	Description
12	Enclosure connector

The symbols correspond to the symbols located on the interconnect bays. For more information, see the *HP ProLiant BL460c Generation 5 Server Blade Installation Instructions* that ship with the server blade.

Mezzanine connector definitions

Item	PCIe
Mezzanine connector 1	x4, Type I mezzanine card only
Mezzanine connector 2	x8, Type 1 or II mezzanine card

A PCIe x4 mezzanine connector supports x8 cards at up to x4 speeds. A PCIe x8 mezzanine connector supports x16 cards at up to x8 speeds.

FBDIMM slot numbering

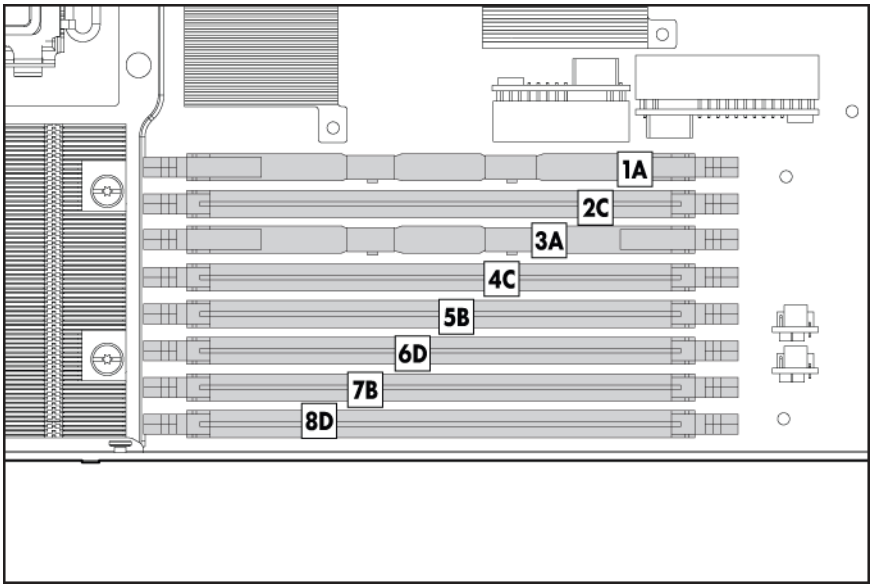

FBDIMM slots	Memory bank	Memory branch
1 and 3	A	0
5 and 7	B	1
2 and 4	C	0
6 and 8	D	1

System maintenance switch

Position	Function	Default
1*	iLO2 security override	Off
2	Configuration lock	Off
3	Reserved	Off
4	Reserved	Off

Position	Function	Default
5*	Password disabled	Off
6*	Reset configuration	Off
7	Reserved	Off
8	Reserved	Off

*To access redundant ROM, set S1, S5, and S6 to ON.

Hard drive backplane components

Some models of this server blade do not include a hard drive backplane.

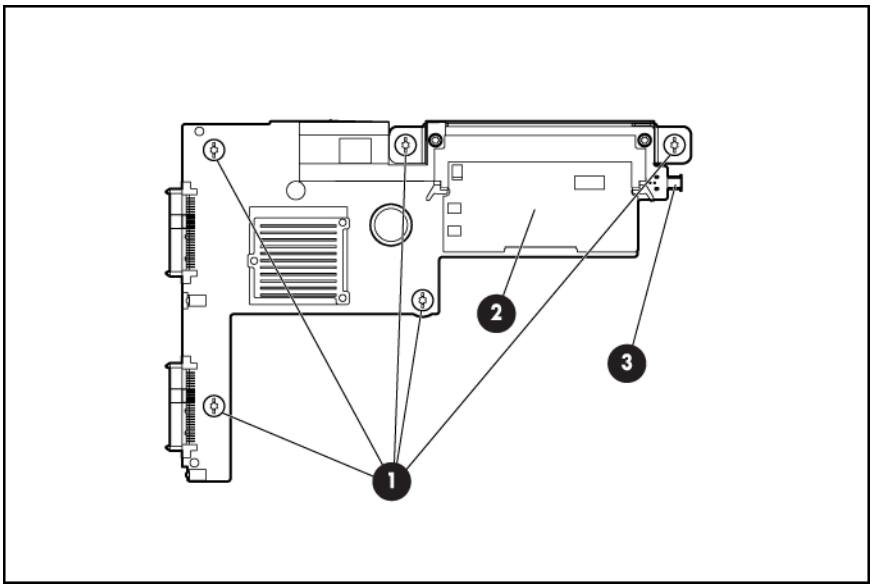

Item	Description
1	Hard drive backplane thumbscrews (5)
2	Smart Array E200i Controller cache module
3	Internal USB connector

HP c-Class Blade SUV Cable

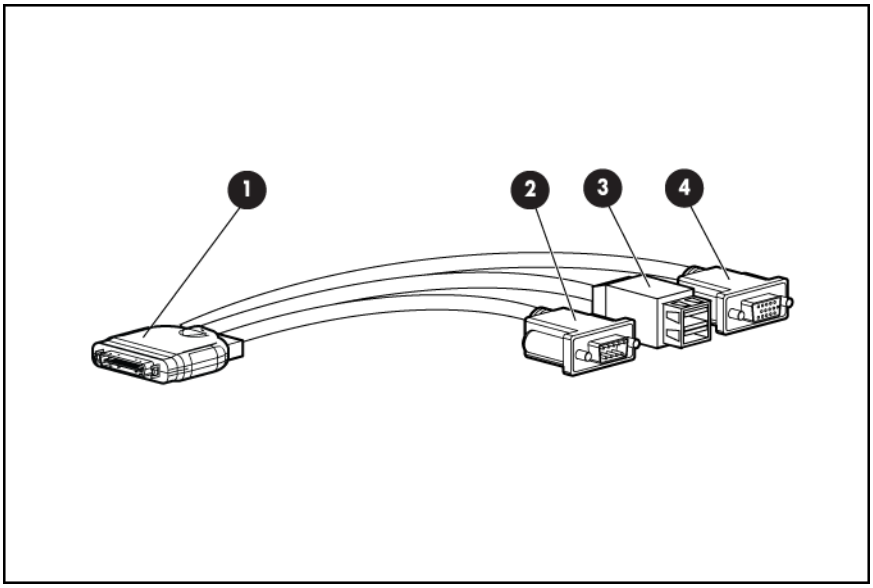

Item	Connector	Description
1	Server blade	For connecting to the SUV connector on the server blade front panel
2	Video	For connecting a video monitor
3	USB	For connecting up to two USB devices
4	Serial	For trained personnel to connect a null modem serial cable and perform advanced diagnostic procedures

Specifications

Environmental specifications

Specification	Value
Temperature range*	
Operating	10°C to 35°C (50°F to 95°F)
Shipping	-40°C to 60°C (-40°F to 140°F)
Storage	-20°C to 60°C (-4°F to 140°F)
Maximum wet bulb temperature	30°C (86°F)
Relative humidity (noncondensing)**	
Operating	10% to 90%
Shipping	10% to 90%
Storage	10% to 95%

* All temperature ratings shown are for sea level. An altitude derating of 1°C per 304.8 m (1.8°F per 1,000 ft) to 3048 m (10,000 ft) is applicable. No direct sunlight allowed. Upper operating limit is 3,048m (10,000 ft) or 70 Kpa/10.1 psia. Upper non-operating limit is 9,144 m (30,000 ft) or 30.3 KPa/4.4 psia.
** Storage maximum humidity of 95% is based on a maximum temperature of 45°C (113°F). Altitude maximum for storage corresponds to a pressure minimum of 70 KPa.

Server blade specifications

Specification	Value
Height	5.56 cm (2.19 in)
Depth	50.95 cm (20.06 in)
Width	18.16 cm (7.15 in)
Weight (maximum)	6.44 kg (14.20 lb)
Weight (no drives installed)	5.82 kg (12.82 lb)

Acronyms and abbreviations

ADU

Array Diagnostics Utility

BBWC

battery-backed write cache

CSR

Customer Self Repair

ESD

electrostatic discharge

FBDIMM

fully buffered DIMM

FC

Fibre Channel

HBA

host bus adapter

I/O

input/output

iLO 2

Integrated Lights-Out 2

IML

Integrated Management Log

LED

light-emitting diode

NIC

network interface controller

PCI

peripheral component interface

PCIe

peripheral component interconnect express

RBSU

ROM-Based Setup Utility

ROM

read-only memory

SAS

serial attached SCSI

SATA

serial ATA

SFF

small form-factor

SIM

Systems Insight Manager

SUV

serial, USB, video

UID

unit identification

UPS

uninterruptible power system

USB

universal serial bus

Index

A

access panel 16, 24
Array Diagnostic Utility (ADU) 51

B

backplane, hard drive 28, 58
battery 16, 48, 56
battery-backed write cache battery pack 16, 33
buttons 53

C

cache module 16, 32
cautions 21
component identification 53, 55
components 16, 53
connectors 53
CSR (customer self repair) 5
customer self repair (CSR) 5

D

diagnostic tools 50
diagnostics utility 50

E

electrostatic discharge 21
enclosure connector 56

F

FBDIMM slot locations 56, 57
FBDIMMs 16, 27, 56, 57
features 53
Fibre Channel mezzanine 16, 31
front panel buttons 53
front panel components 53
front panel LEDs 54
front panel/hard drive cage assembly 16, 30

H

hard drive backplane 16, 28, 58
hard drive backplane components 58
hard drive backplane connector 56, 58
hard drive backplane retainer 29
hard drive backplane thumbscrews 58
hard drive bays 53
hard drive blanks 16, 25
hard drive LEDs 55
hard drives 16, 25, 55
hard drives, determining status of 55
hardware kit 16
heatsink 16, 36
heatsink blank 16, 36
HP c-Class Blade SUV Cable 16, 53, 59
HP Insight Diagnostics 21, 50

I

illustrated parts catalog 16
IML (Integrated Management Log) 51
Insight Diagnostics 21, 50
Integrated Management Log (IML) 51
internal USB connector 58

L

LED, health 54, 55
LED, power button 54
LED, system power 54
LEDs, hard drive 55
LEDs, NIC 54
LEDs, unit identification (UID) 54
local I/O cable 16

M

management tools 50
memory 16, 27, 57
mezzanine board connectors 56
mezzanine boards 16, 31
mezzanine connector covers 16
mezzanine connectors 56, 57

N

NIC (network interface card) 56

P

part numbers 16
Power On/Standby button 53
powering down 23
preparation procedures 22
processor socket 56
processor socket cover 16
processors 16, 38, 56

R

release button 16, 35, 53
removing the access panel 24
removing the server blade 23
required tools 21

S

safety considerations 21
safety information 21
SAS drives 16, 25, 55
SAS hard drive LEDs 55
SATA hard drive 16, 25, 55
SATA hard drive LEDs 55
serial connector 59
serial label pull tab 53
server blade handle 16, 34, 53
Smart Array E200i Controller components 32, 33
specifications, server blade 60
static electricity 21
SUV connector 53, 59
system battery 16, 48
system board 16, 43, 56
system board thumbscrews 56
system maintenance switch 56, 57

T

tools 21, 50
Torx screwdriver 21
troubleshooting 50

U

USB connectors 58, 59
utilities 50

V

video connector 59
video connector cabling 59

W

warnings 21