HP ProLiant BL465c G6 Server Blade User Guide



Part Number 574424-001
June 2009 (First Edition)

© Copyright 2009 Hewlett-Packard Development Company, L.P.

The information contained herein is subject to change without notice. The only warranties for HP products and services are set forth in the express warranty statements accompanying such products and services. Nothing herein should be construed as constituting an additional warranty. HP shall not be liable for technical or editorial errors or omissions contained herein.

Microsoft, Windows, Windows Server, and Windows NT are U.S. registered trademarks of Microsoft Corporation.

Intel and Pentium are trademarks or registered trademarks of Intel Corporation or its subsidiaries in the United States and other countries.

AMD Athlon is a trademark of Advanced Micro Devices.

Intended audience

This document is for the person who installs, administers, and troubleshoots servers and storage systems. HP assumes you are qualified in the servicing of computer equipment and trained in recognizing hazards in products with hazardous energy levels.

Contents

Component identification 6
Front panel components 6
Front panel LEDs 7
SAS and SATA hard drive LEDs 8
SAS and SATA hard drive LED combinations 8
System board components 9
Mezzanine connector definitions 10
DIMM slots 10
System maintenance switch 10
HP c-Class Blade SUV Cable 11
Operations 12
Power up the server blade 12
Power down the server blade 12
Remove the server blade 13
Remove the access panel 14
Install the access panel 14
Setup 15
Overview 15
Installing an HP BladeSystem c-Class enclosure 15
Installing server blade options 15
Installing interconnect modules 15
Interconnect bay numbering and device mapping 16
Connecting to the network 17
Installing a server blade 18
Completing the configuration 19
Hardware options installation 20
Introduction 20
Hard drive option 20
Processor option 21
Memory options 27
Advanced ECC memory 27
DIMM installation guidelines 27
DIMM population order 28
Installing DIMMs 28
Mezzanine card option 29
HP Smart Array E200i Battery-Backed Write Cache module option 30
Cabling 34
Using the HP c-Class Blade SUV Cable 34
Connecting locally to a server blade with video and USB devices 34
Accessing a server blade with local KVM 34
Accessing a server blade with local media devices 35
Software and configuration utilities 37
Server blade deployment tools 37

Software drivers and additional components 37
HP BladeSystem c-Class Advanced management 37
Network-based PXE deployment 38
Deployment methods 40
Configuration tools 43
SmartStart software 43
HP ROM-Based Setup Utility 43
Array Configuration Utility 45
SAN configuration 45
Re-entering the server serial number and product ID 46
Option ROM Configuration for Arrays 46
Management tools 47
Automatic Server Recovery 47
ROMPaq utility 47
Integrated Lights-Out 2 technology 47
Erase Utility 48
StorageWorks library and tape tools 48
HP Systems Insight Manager 48
Management Agents 48
HP ProLiant Essentials Virtualization Management Software 49
HP Insight Server Migration software for ProLiant 49
HP Insight Control Environment Suites 49
Redundant ROM support 50
USB support and functionality 50
Internal SD support 51
Diagnostic tools 51
HP Insight Diagnostics 51
HP Insight Diagnostics survey functionality 51
Integrated Management Log 52
Array Diagnostic Utility 52
Remote support and analysis tools 52
HP Insight Remote Support software 52
Keeping the system current 53
Drivers 53
ProLiant Support Packs 53
Operating system version support 53
System Online ROM flash component utility 54
Change control and proactive notification 54
Care Pack 54

Troubleshooting 55
Troubleshooting resources 55
Pre-diagnostic steps 55
Important safety information 56
Symptom information 57
Prepare the server for diagnosis 57
Service notifications 58
Loose connections 58
Troubleshooting flowcharts 58
Start diagnosis flowchart 59
General diagnosis flowchart 60
Server blade power-on problems flowchart 62
POST problems flowchart 64
OS boot problems flowchart 66

Server fault indications flowchart 68
POST error messages and beep codes 70
Introduction to POST error messages 70
Processor X Unsupported Wattage 71
Battery replacement 72
Regulatory compliance notices 73
Regulatory compliance identification numbers 73
Federal Communications Commission notice 73
FCC rating label 73
Class A equipment 73
Class B equipment 73
Declaration of conformity for products marked with the FCC logo, United States only 74
Modifications 74
Cables 74
Canadian notice (Avis Canadien) 75
European Union regulatory notice 75
Disposal of waste equipment by users in private households in the European Union 75
Japanese notice 76
BSMI notice 76
Korean notice 76
Chinese notice 77
Laser compliance 77
Battery replacement notice 77
Taiwan battery recycling notice 78
Electrostatic discharge 79
Preventing electrostatic discharge 79
Grounding methods to prevent electrostatic discharge 79
Specifications 80
Environmental specifications 80
Server blade specifications 80
Technical support 81
Before you contact HP 81
HP contact information 81
Customer Self Repair 81
Acronyms and abbreviations 89
Index 91

Component identification

Front panel components

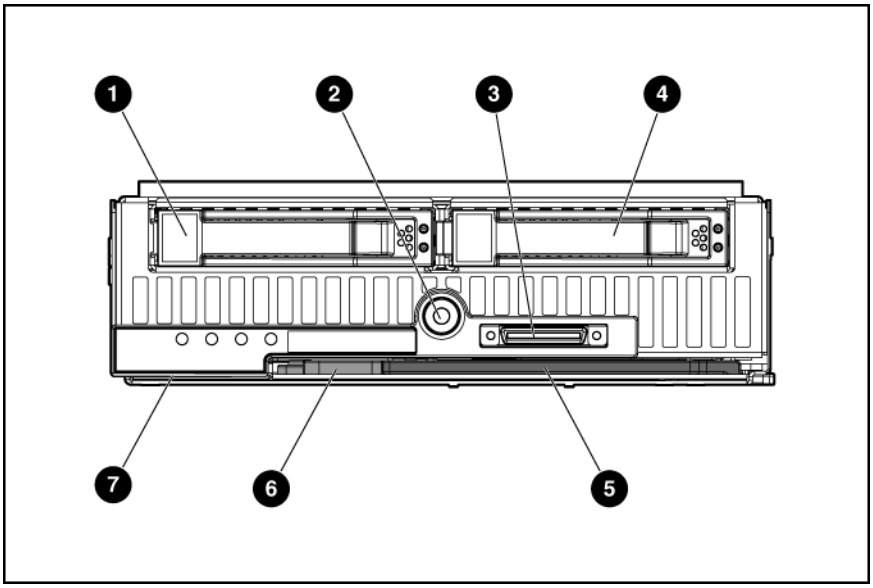

Item	Description
1	Hard drive bay 1
2	Power On/Standby button
3	SUV connector*
4	Hard drive bay 2
5	Server blade handle
6	Release button
7	Serial label pull tab

* The SUV connector and the HP c-Class Blade SUV cable are for some server blade configuration and diagnostic procedures.

Front panel LEDs

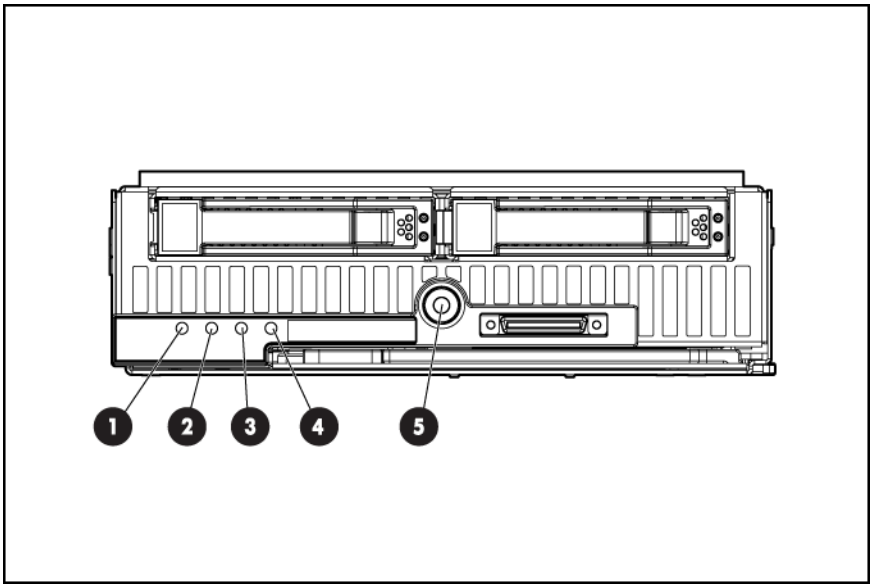

Item	Description	Status
1	UID LED	Blue = Identified Blue flashing = Active remote management Off = No active remote management
2	Health LED	Green = Normal Flashing amber = Degraded condition Flashing red = Critical condition
3	NIC 1 LED*	Green = Network linked Green flashing = Network activity Off = No link or activity
4	NIC 2 LED*	Green = Network linked Green flashing = Network activity Off = No link or activity
5	System power LED	Green = On Amber = Standby (auxiliary power available) Off = Off

* Actual NIC numbers depend on several factors, including the operating system installed on the server blade.

SAS and SATA hard drive LEDs

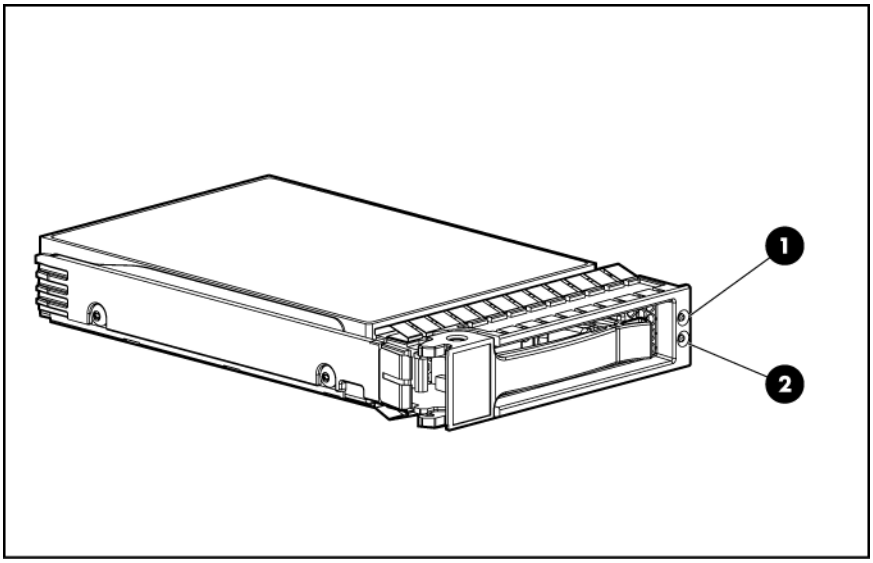

Item	Description
1	Fault/UID LED (amber/blue)
2	Online LED (green)

SAS and SATA hard drive LED combinations

Online/activity LED (green)	Fault/UID LED (amber/blue)	Interpretation
On, off, or flashing	Alternating amber and blue	The drive has failed, or a predictive failure alert has been received for this drive; it also has been selected by a management application.
On, off, or flashing	Steadily blue	The drive is operating normally, and it has been selected by a management application.
On	Amber, flashing regularly (1 Hz)	A predictive failure alert has been received for this drive. Replace the drive as soon as possible.
On	Off	The drive is online, but it is not active currently.
Flashing regularly (1 Hz)	Amber, flashing regularly (1 Hz)	**Do not remove the drive. Removing a drive may terminate the current operation and cause data loss.** The drive is part of an array that is undergoing capacity expansion or stripe migration, but a predictive failure alert has been received for this drive. To minimize the risk of data loss, do not replace the drive until the expansion or migration is complete.
Flashing regularly (1 Hz)	Off	**Do not remove the drive. Removing a drive may terminate the current operation and cause data loss.** The drive is rebuilding, erasing, or it is part of an array that is undergoing capacity expansion or stripe migration.

Online/activity LED (green)	Fault/UID LED (amber/blue)	Interpretation
Flashing irregularly	Amber, flashing regularly (1 Hz)	The drive is active, but a predictive failure alert has been received for this drive. Replace the drive as soon as possible.
Flashing irregularly	Off	The drive is active, and it is operating normally.
Off	Steadily amber	A critical fault condition has been identified for this drive, and the controller has placed it offline. Replace the drive as soon as possible.
Off	Amber, flashing regularly (1 Hz)	A predictive failure alert has been received for this drive. Replace the drive as soon as possible.
Off	Off	The drive is offline, a spare, or not configured as part of an array.

System board components

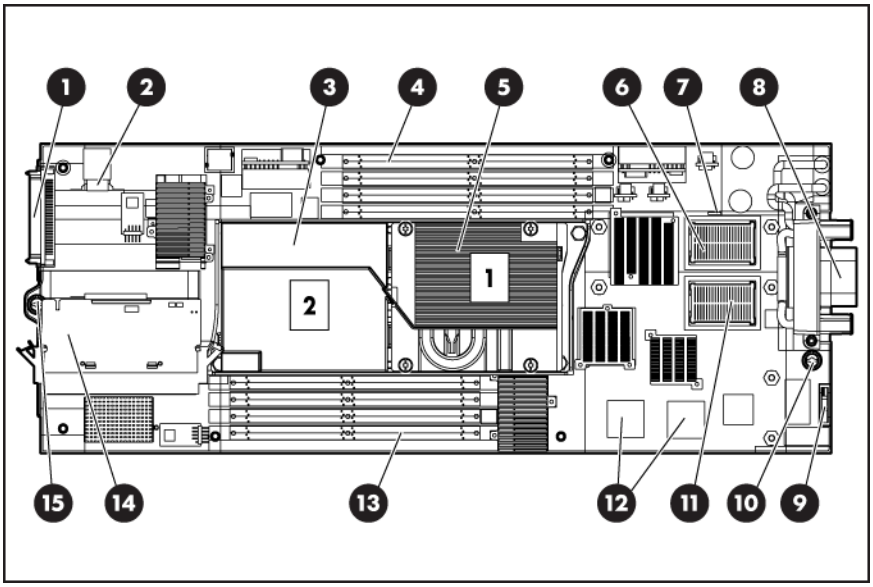

Item	Description
1	Bezel LED connector
2	Internal USB connector (under hard drive cage)
3	Processor socket 2
4	DIMM slots (Processor 1 memory banks A and B)
5	Processor socket 1 (populated)
6	Mezzanine connector 2 (Type I or Type II mezzanine)
7	System maintenance switch (SW1)
8	Enclosure connector
9	Battery
10	System board thumbscrew
11	Mezzanine connector 1 (Type I mezzanine only)
12	Embedded NICs (2)

Item	Description
13	DIMM slots (Processor 2 memory banks C and D)
14	HP Smart Array E200i cache module (under hard drive cage)
15	System board thumbscrew

The symbols correspond to the symbols located on the interconnect bays. For more information, see the *HP ProLiant BL465c G6 Server Blade Installation Instructions* that ship with the server blade.

Mezzanine connector definitions

Item	PCIe
Mezzanine connector 1	x4, Type I mezzanine card only
Mezzanine connector 2	x8, Type I or II mezzanine card

A PCIe x4 mezzanine connector supports x8 cards at up to x4 speeds. A PCIe x8 mezzanine connector supports x16 cards at up to x8 speeds.

DIMM slots

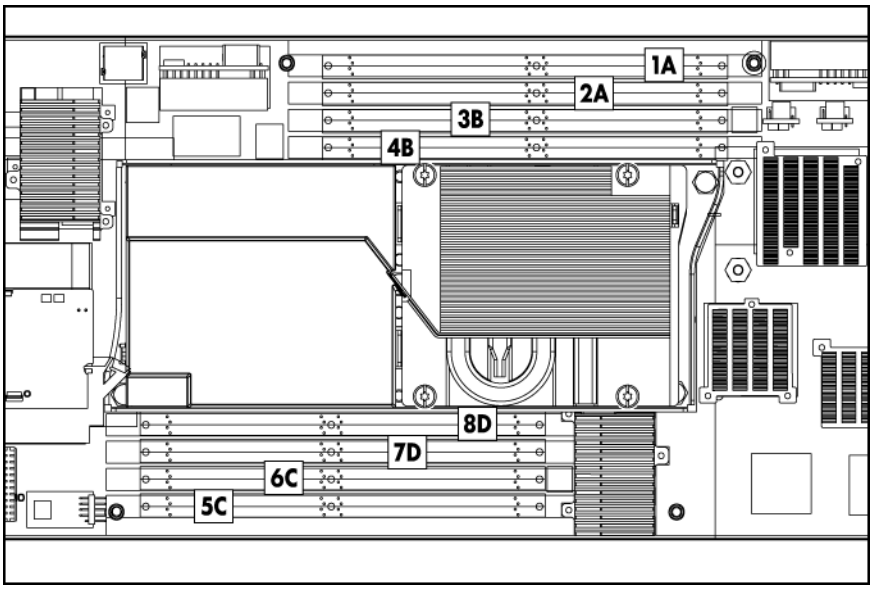

For installation guidelines and population order, see "Memory options (on page 27)."

System maintenance switch

Position	Function	Default
1*	iLO 2 security override	Off
2	Configuration lock	Off
3	Reserved	Off
4	Reserved	Off
5*	Password disabled	Off
6*	Reset configuration	Off
7	Reserved	Off

Position	Function	Default
8	Reserved	Off

*To access redundant ROM, set S1, S5, and S6 to ON.

HP c-Class Blade SUV Cable

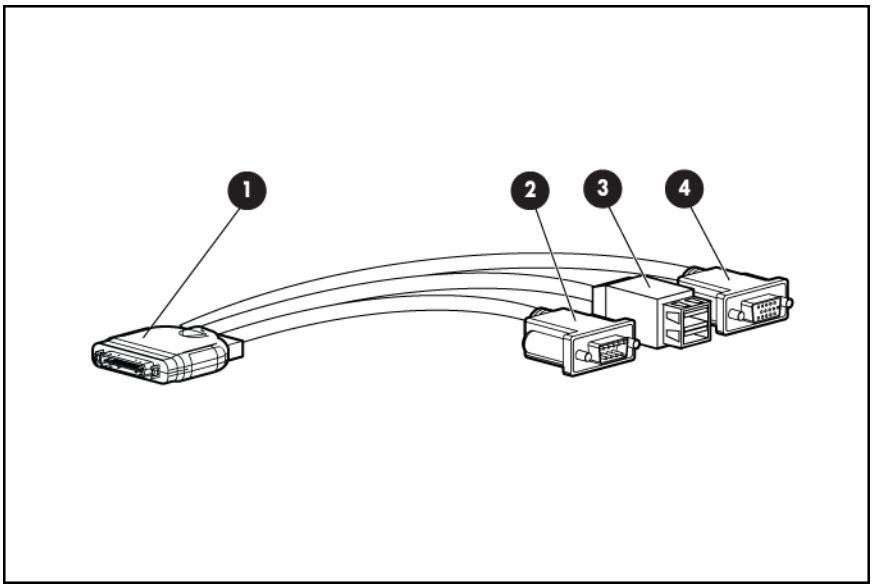

Item	Connector	Description
1	Server blade	For connecting to the SUV connector on the server blade front panel
2	Video	For connecting a video monitor
3	USB	For connecting up to two USB devices
4	Serial	For trained personnel to connect a null modem serial cable and perform advanced diagnostic procedures

Operations

Power up the server blade

The Onboard Administrator initiates an automatic power-up sequence when the server blade is installed. If the default setting is changed, use one of the following methods to power up the server blade:

- Use a virtual power button selection through iLO 2.
- Press and release the Power On/Standby button.

When the server blade goes from the standby mode to the full power mode, the system power LED changes from amber to green.

For more information about the Onboard Administrator, see the enclosure setup and installation guide on the HP website (http://www.hp.com/support).

For more information about iLO 2, see "Integrated Lights-Out 2 technology."

Power down the server blade

Before powering down the server blade for any upgrade or maintenance procedures, perform a backup of critical server data and programs.

Depending on the Onboard Administrator configuration, use one of the following methods to power down the server blade:

- Use a virtual power button selection through iLO 2.

  This method initiates a controlled remote shutdown of applications and the OS before the server blade enter standby mode.
- Press and release the Power On/Standby button.

  This method initiates a controlled shutdown of applications and the OS before the server blade enter standby mode.
- Press and hold the Power On/Standby button for more than 4 seconds to force the server blade to enter standby mode.

  This method forces the server blade to enter standby mode without properly exiting applications and the OS. It provides an emergency shutdown method in the event of a hung application.
- Execute one of the following commands using the Onboard Administrator CLI:

  ```
  poweroff server all
  ```

  or

  ```
  poweroff server all force
  ```

  The first command initiates a controlled shutdown of applications and the OS before the server blade enter standby mode. The second form of the command forces the server blade to enter standby mode without exiting applications and the OS. This is an emergency method to force a shutdown in the event of a hung application.

- Use the Onboard Administrator GUI to initiate a shutdown:
  a. Select the Enclosure Information tab, then select the Overall checkbox in the Device Bays item.
  b. Initiate a shutdown from the Virtual Power menu:
     — Select Momentary Press to initiate a controlled shutdown of applications and the OS.
     — Select Press and Hold to initiate an emergency shutdown of applications and the OS.

IMPORTANT: When the server blade are in standby mode, auxiliary power is still being provided. To remove all power from the server blade, remove the server blade from the enclosure.

After initiating a virtual power down command, be sure that the server blade go into standby mode by observing that the system power LED is amber.

Remove the server blade

To remove the component:

1. Identify the proper server blade.
2. Power down the server blade (on page 12).
3. Remove the server blade.

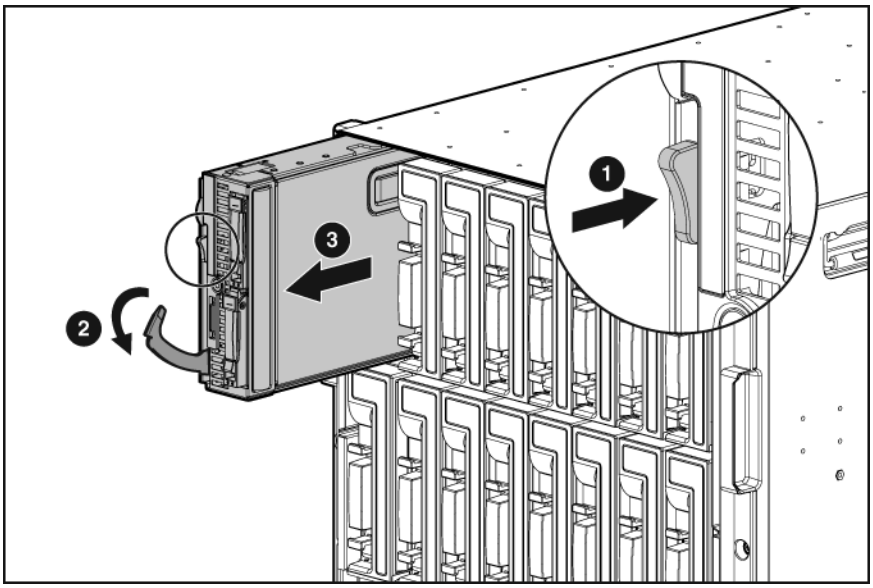

4. Place the server blade on a flat, level work surface.

WARNING: To reduce the risk of personal injury from hot surfaces, allow the drives and the internal system components to cool before touching them.

CAUTION: To prevent damage to electrical components, properly ground the server blade before beginning any installation procedure. Improper grounding can cause ESD.

Remove the access panel

To remove the component:

1. Power down the server blade (on page 12).
2. Remove the server blade (on page 13).
3. Lift the access panel latch and slide the access panel to the rear.
4. Remove the access panel.

⚠ **WARNING:** To reduce the risk of personal injury from hot surfaces, allow the drives and the internal system components to cool before touching them.

△ **CAUTION:** To prevent damage to electrical components, properly ground the server blade before beginning any installation procedure. Improper grounding can cause ESD.

Install the access panel

1. Place the access panel on top of the server blade with the hood latch open. Allow the panel to extend past the rear of the server blade approximately 0.8 cm (0.2 in).
2. Engage the anchoring pin with the corresponding hole in the latch.
3. Push down on the hood latch. The access panel slides to a closed position.

Setup

Overview

Installation of a server blade requires the following steps:

1. Install and configure an HP BladeSystem c-Class enclosure.
2. Install any server blade options.
3. Install interconnect modules in the enclosure.
4. Connect the interconnect modules to the network.
5. Install a server blade.
6. Complete the server blade configuration.

Installing an HP BladeSystem c-Class enclosure

Before performing any server blade-specific procedures, install an HP BladeSystem c-Class enclosure.

The most current documentation for server blades and other HP BladeSystem components is available at the HP website (http://www.hp.com/go/bladesystem/documentation).

Documentation is also available in the following locations:

- Documentation CD that ships with the enclosure
- HP Business Support Center website (http://www.hp.com/support)
- HP Technical Documentation website (http://docs.hp.com)

Installing server blade options

Before installing and initializing the server blade, install any server blade options, such as an additional processor, hard drive, or mezzanine card.

Installing interconnect modules

For specific steps to install interconnect modules, see the documentation that ships with the interconnect module.

Interconnect bay numbering and device mapping

- HP BladeSystem c7000 Enclosure

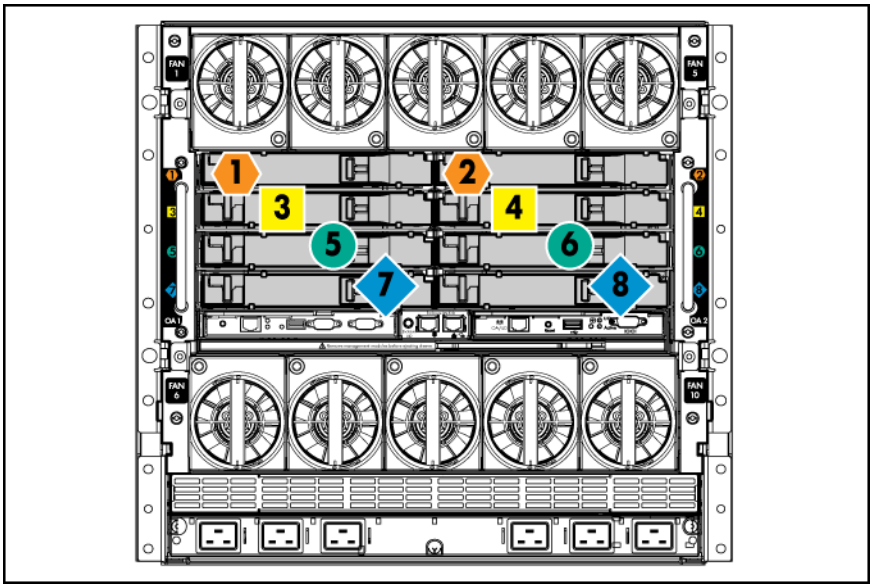

To support network connections for specific signals, install an interconnect module in the bay corresponding to the embedded NIC or mezzanine signals.

Server blade signal	Interconnect bay	Interconnect bay labels
NIC 1 (Embedded)	1	⬢
NIC 2 (Embedded)	2	⬢
Mezzanine 1	3 and 4	■
Mezzanine 2	5 and 6	●
	7 and 8	◆

For detailed port mapping information, see the HP BladeSystem enclosure installation poster or the HP BladeSystem enclosure setup and installation guide on the HP website (http://www.hp.com/go/bladesystem/documentation).

- HP BladeSystem c3000 Enclosure and Tower Enclosure

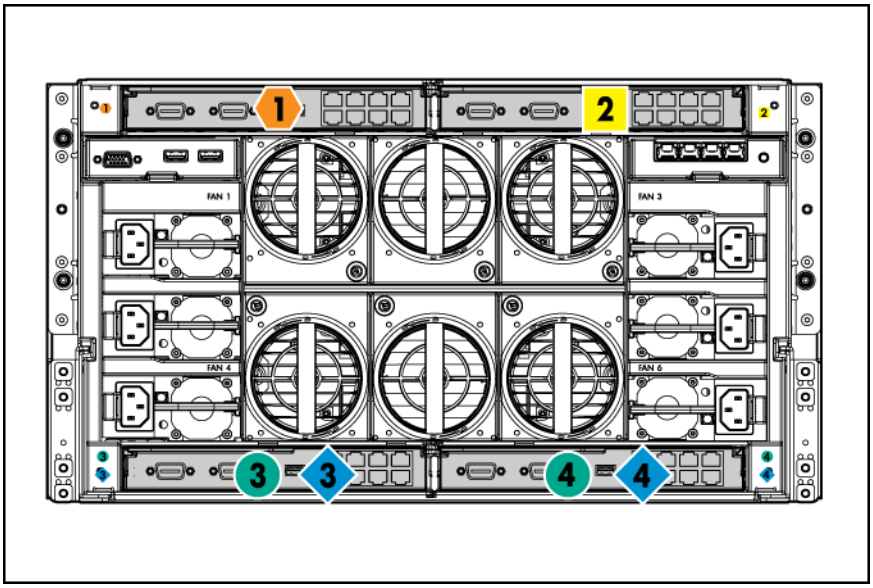

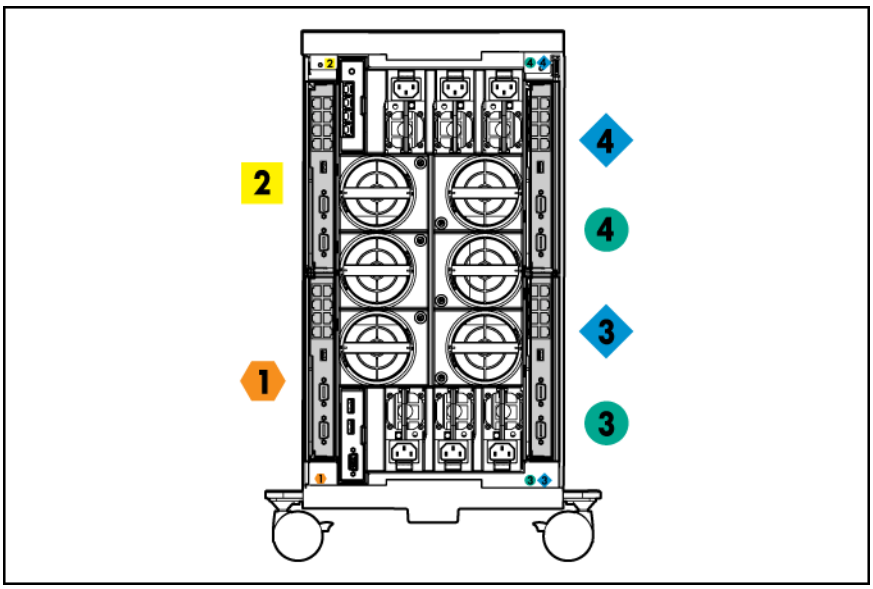

Server blade signal	Interconnect bay number	Interconnect bay label	Notes
NICs 1, 2 (embedded)	1	⬢	—
Mezzanine 1	2	■	Four port cards connect to bay 2
Mezzanine 2	3,4	● ◆	• Four port cards • Ports 1 and 3 connect to bay 3 • Ports 2 and 4 connect to bay 4

Connecting to the network

To connect the HP BladeSystem to a network, each enclosure must be configured with network interconnect devices to manage signals between the server blades and the external network.

Two types of interconnect modules are available for HP BladeSystem c-Class enclosures: Pass-thru modules and switch modules. For more information about interconnect module options, see the HP website (http://www.hp.com/go/bladesystem/interconnects).

Installing a server blade

CAUTION: To prevent improper cooling and thermal damage, do not operate the server blade or the enclosure unless all hard drive and device bays are populated with either a component or a blank.

1. Remove the blank.

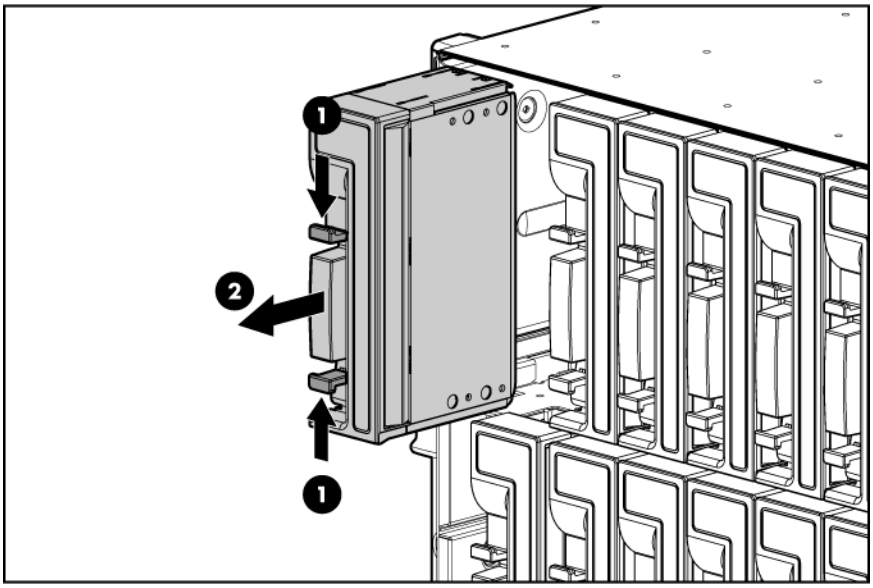

2. Remove the enclosure connector cover.

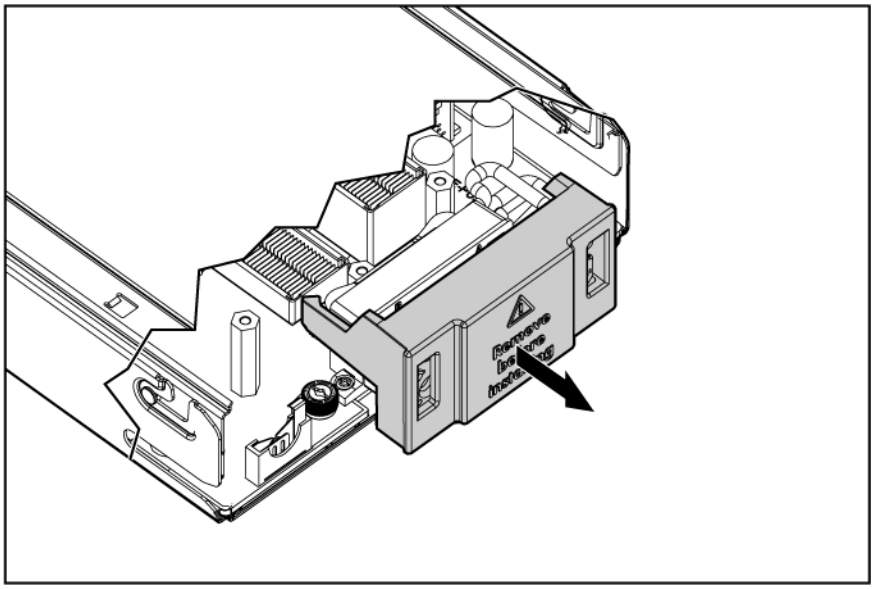

3. Prepare the server blade for installation.

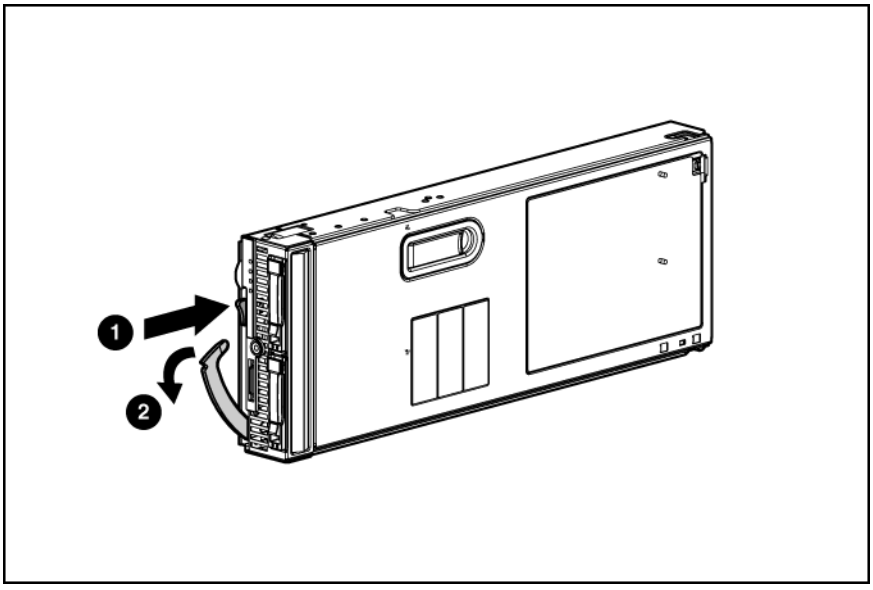

4. Install the server blade.

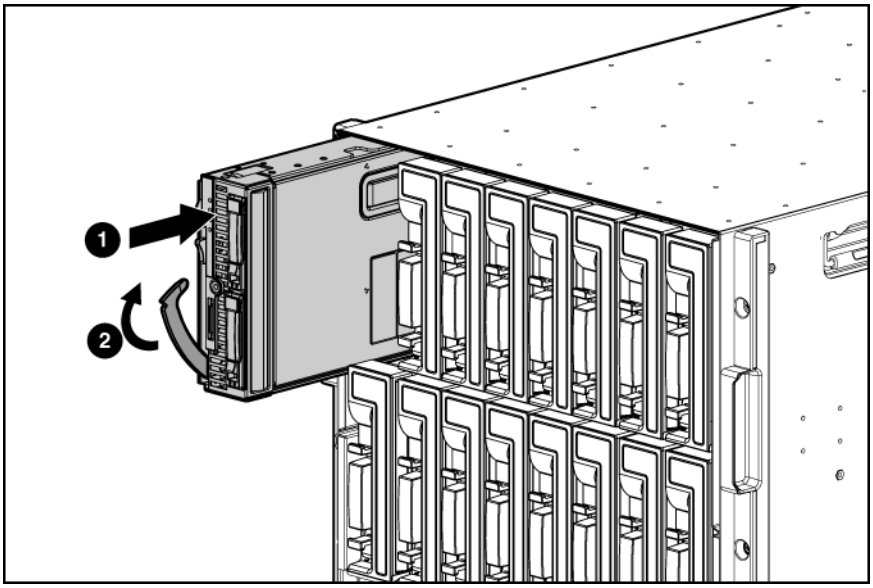

Completing the configuration

To complete the server blade and HP BladeSystem configuration, see the overview card that ships with the enclosure.

Hardware options installation

Introduction

If more than one option is being installed, read the installation instructions for all the hardware options and identify similar steps to streamline the installation process.

WARNING: To reduce the risk of personal injury from hot surfaces, allow the drives and the internal system components to cool before touching them.

CAUTION: To prevent damage to electrical components, properly ground the server before beginning any installation procedure. Improper grounding can cause electrostatic discharge.

Hard drive option

The server blade supports up to two SAS or SATA drives.

CAUTION: To prevent improper cooling and thermal damage, do not operate the server blade or the enclosure unless all hard drive and device bays are populated with either a component or a blank.

1. Remove the hard drive blank.

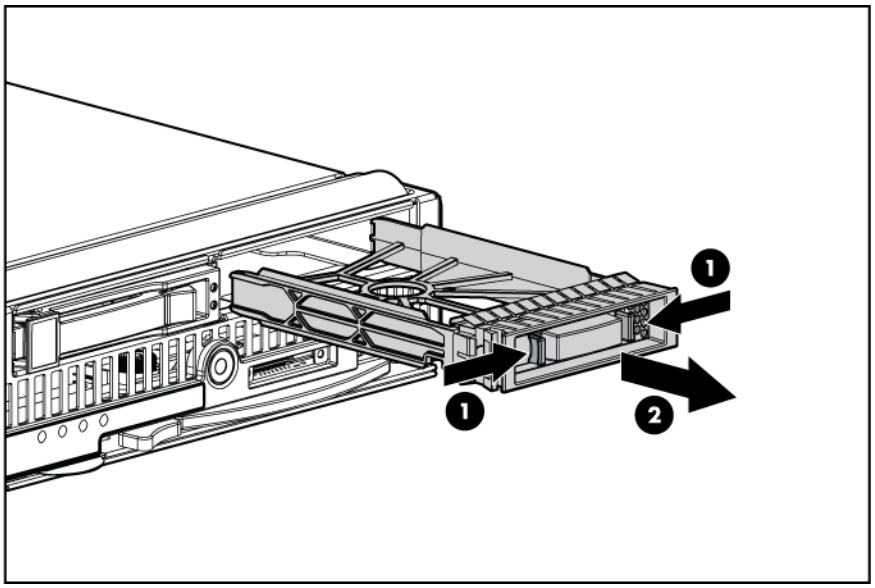

2. Prepare the hard drive.

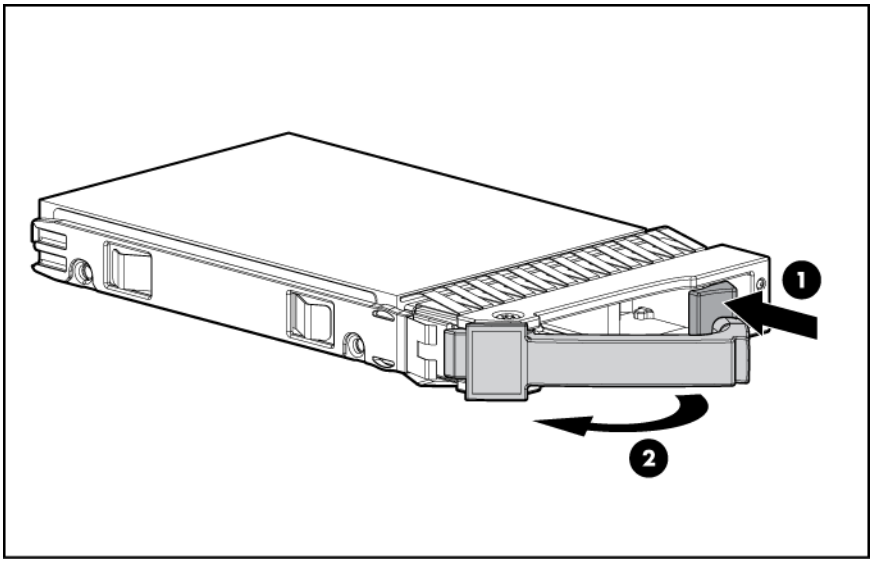

3. Install the hard drive.

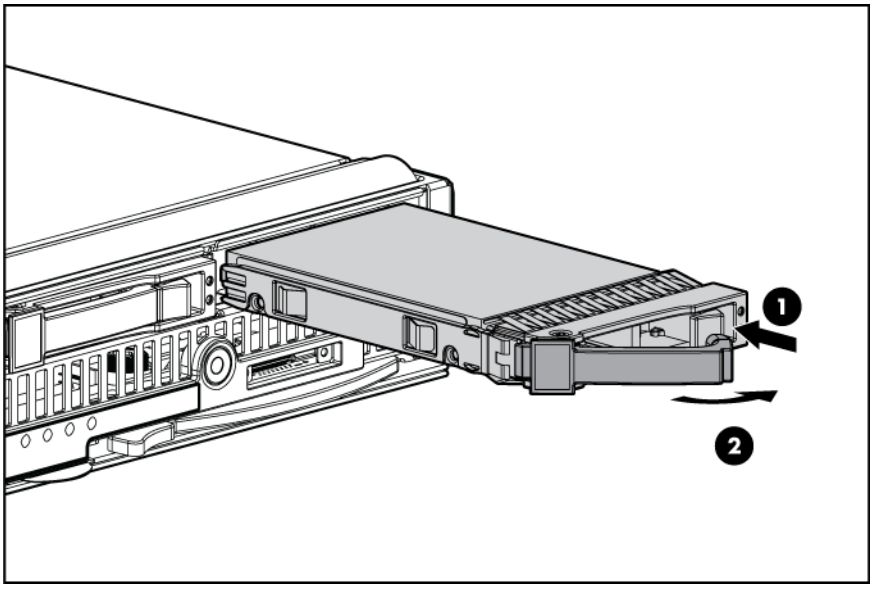

4. Determine the status of the hard drive from the hot-plug hard drive LEDs ("SAS and SATA hard drive LEDs" on page 8).

Processor option

WARNING: To reduce the risk of personal injury from hot surfaces, allow the drives and the internal system components to cool before touching them.

CAUTION: To avoid damage to the system board:

- Do not touch the processor socket contacts.
- Always install the processor socket cover after removing the processor from the socket.
- Do not tilt or slide the processor when lowering the processor into the socket.

CAUTION: To avoid damage to the processor:

- Handle the processor only by the edges.
- Do not touch the bottom of the processor, especially the contact area.

CAUTION: To prevent possible server blade malfunction, do not mix processors of different speeds or cache sizes. Refer to the label on the processor heatsink for a description of the processor.

CAUTION: The heatsink thermal interface media is not reusable and must be replaced if the heatsink is removed from the processor after it has been installed.

CAUTION: To prevent possible server blade overheating, always populate each processor socket with a processor socket cover and a heatsink blank or a processor and a heatsink.

IMPORTANT: Processor socket 1 must always be populated. If processor socket 1 is empty, the server blade does not power up.

To install a processor:

1. Power down the server blade (on page 12).
2. Remove the server blade (on page 13).
3. Remove the access panel (on page 14).
4. Remove the heatsink blank. Retain the heatsink blank for future use.

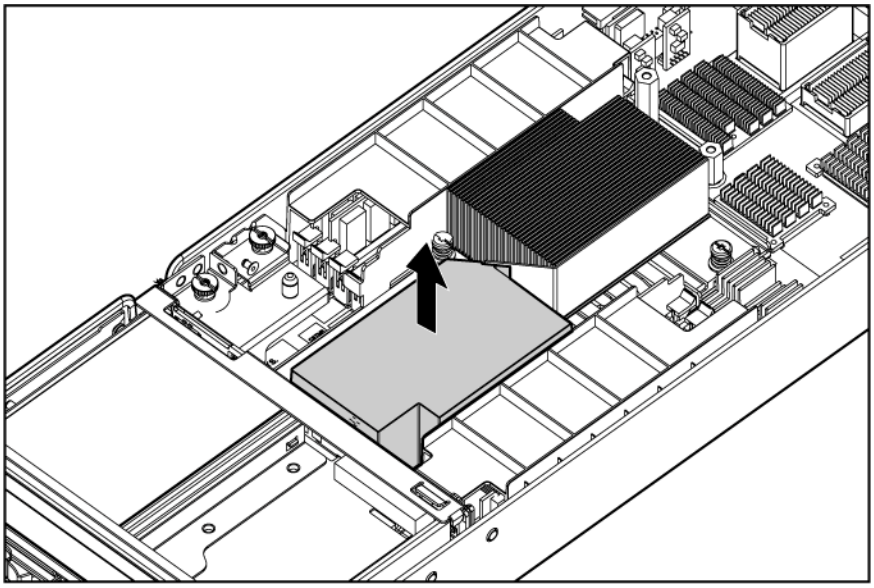

CAUTION: The pins on the processor socket are very fragile. Any damage to them may require replacing the system board.

5. Remove the processor socket protective cover. Retain the cover for future use.

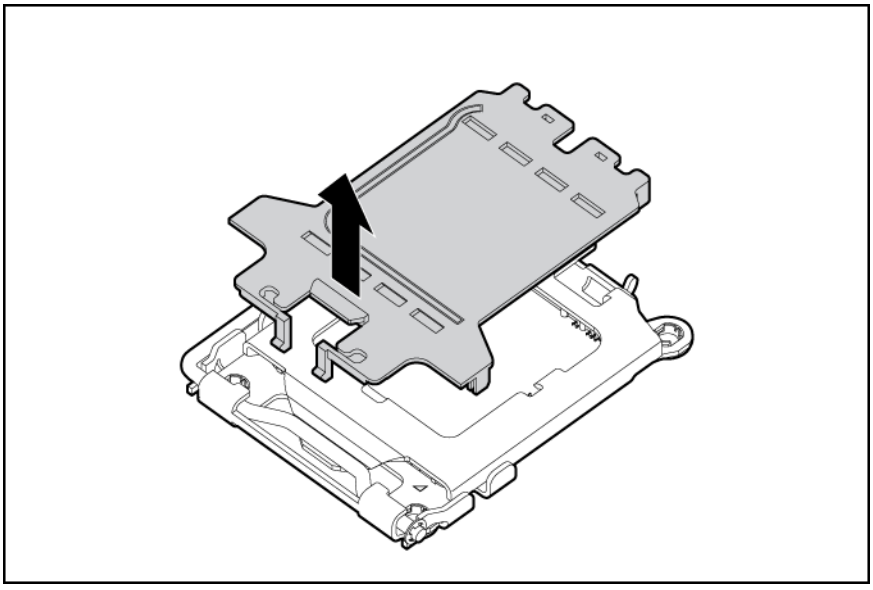

CAUTION: Failure to completely open the processor retaining latch prevents the processor from seating during installation, leading to hardware damage.

6. Open the processor retaining latch and the processor socket retaining bracket.

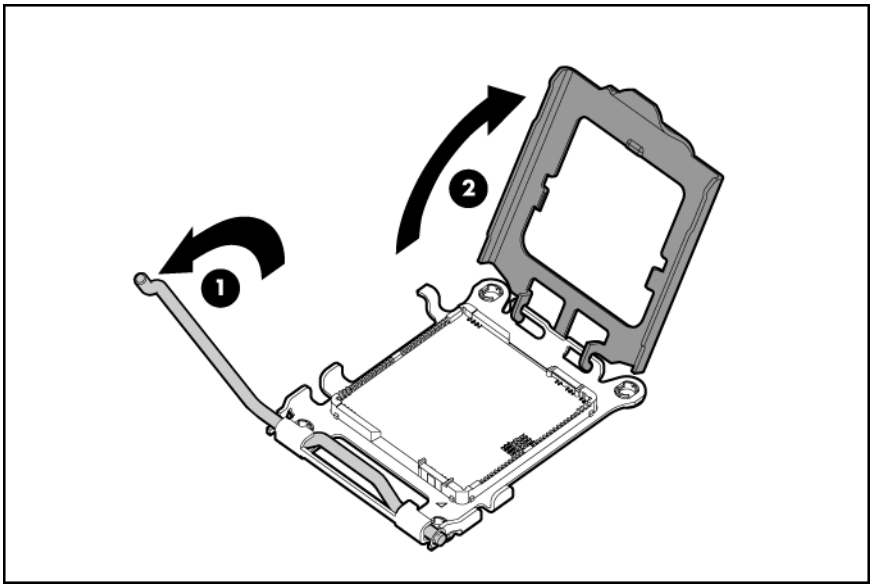

IMPORTANT: Be sure the processor remains inside the processor installation tool.

7. If the processor has separated from the installation tool, carefully re-insert the processor in the tool.

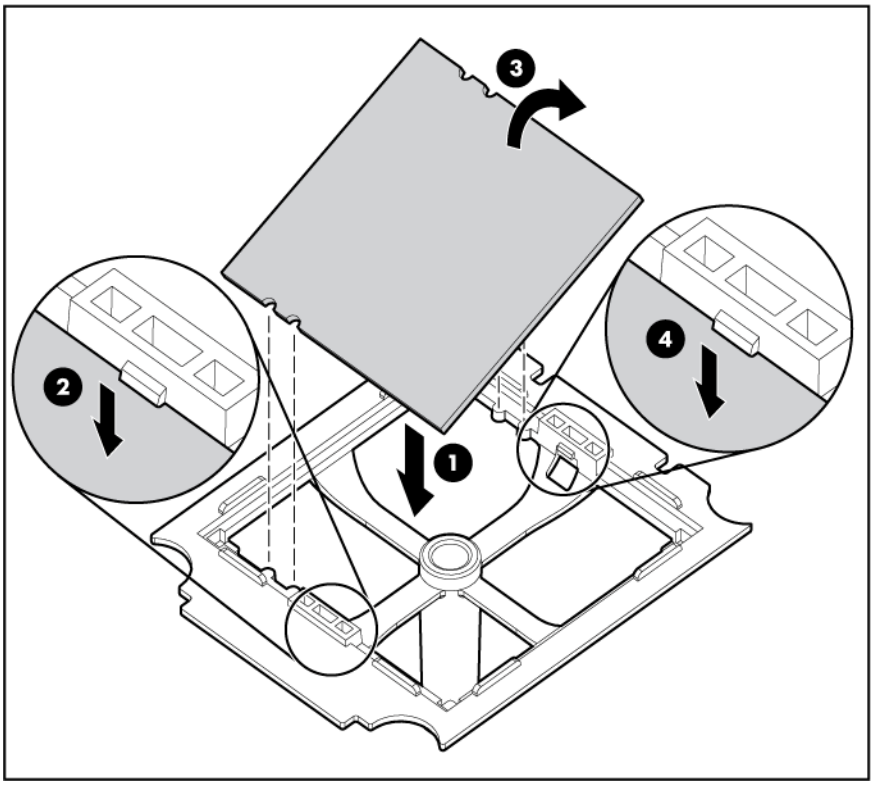

8. Align the processor installation tool with the socket and install the processor.

> **CAUTION:** The processor is designed to fit one way into the socket. Use the alignment guides on the processor and socket to properly align the processor with the socket.

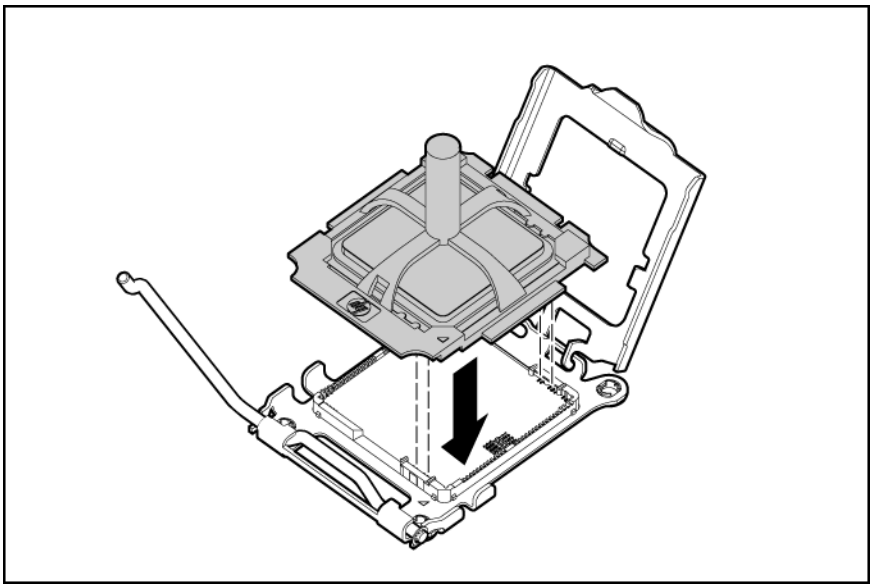

9. Press down firmly until the processor installation tool clicks and separates from the processor, and then remove the processor installation tool.

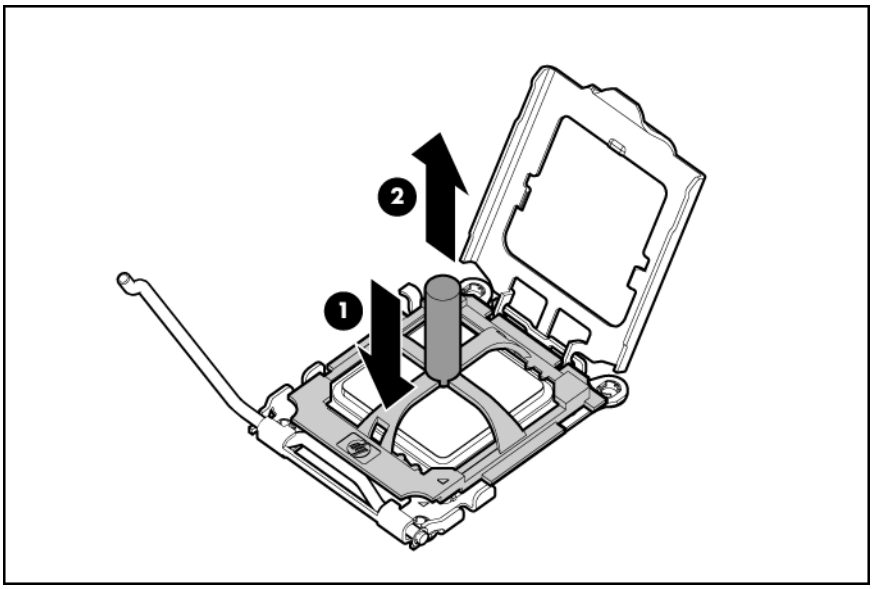

10. Close the processor retaining bracket and the processor retaining latch.

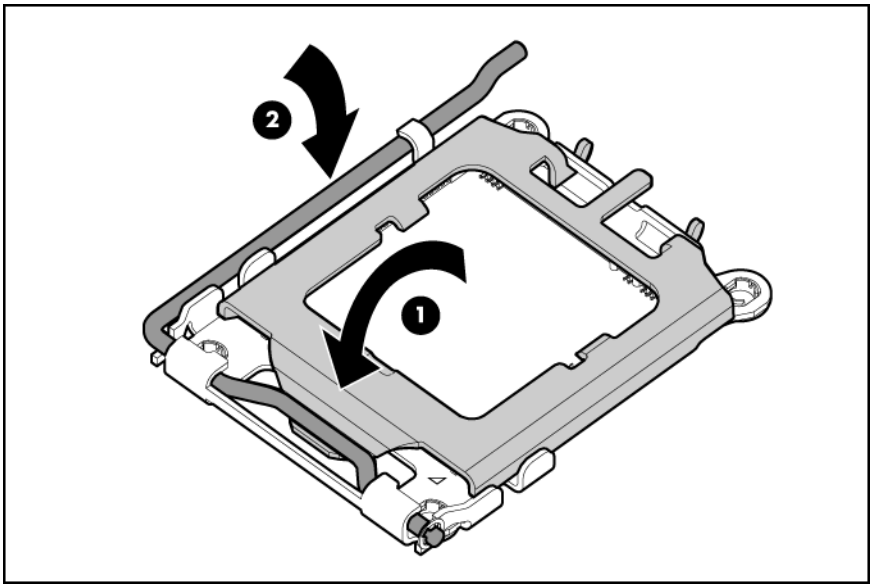

11. Remove the thermal interface protective cover from the heatsink.

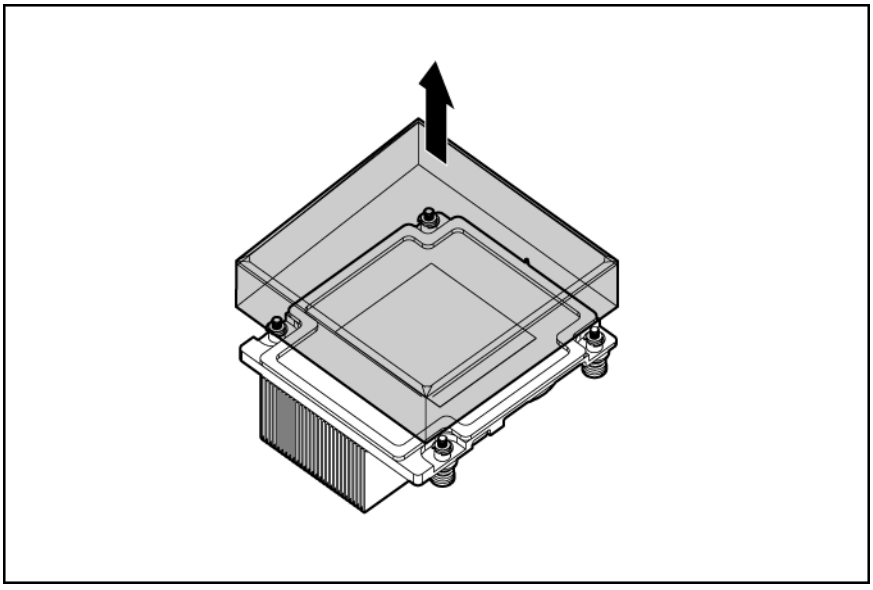

12. Align the slot in the heatsink with the tab on the processor retention bracket.

> **CAUTION:** Heatsink retaining screws should be tightened in diagonally opposite pairs (in an "X" pattern).

> **NOTE:** The T-15 Torx screwdriver is attached to the server access panel.

13. Install the heatsink.

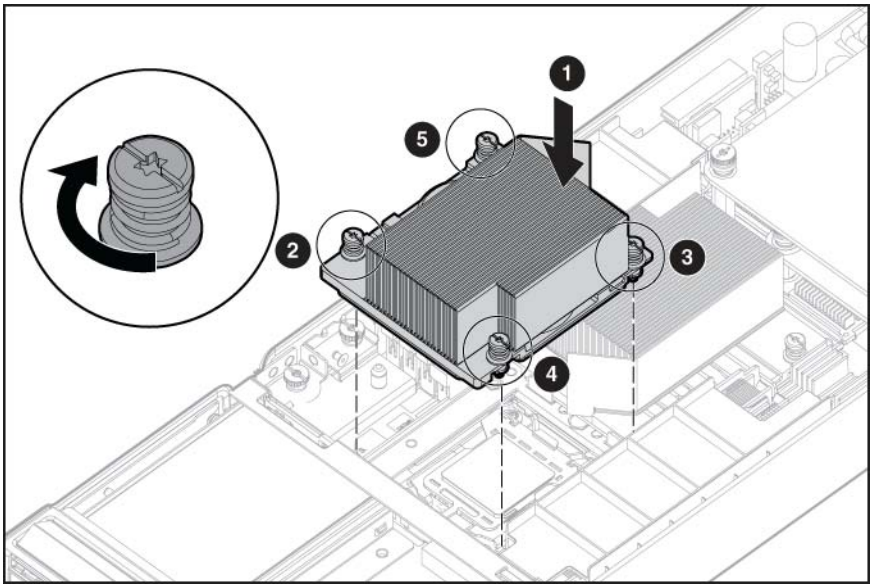

14. Install the access panel (on page 14).
15. Install the server blade ("Installing a server blade" on page 18).

Memory options

You can expand server memory by installing PC2-5300 Registered DDR2 SDRAM DIMMs. The server supports up to 32 GB of memory using eight 4-GB DIMMs (four DIMMs per processor).

NOTE: The Advanced Memory Protection option in RBSU provides additional memory protection beyond Advanced ECC. By default, the server is set to **Advanced ECC Support**. For more information, refer to "HP ROM-Based Setup Utility (on page 43)."

For DIMM slot locations and bank assignments, see "DIMM slots (on page 10)."

Advanced ECC memory

Advanced ECC memory is the default memory protection mode for this server blade. In Advanced ECC, the server blade is protected against correctable memory errors. The server blade provides notification if the level of correctable errors exceeds a pre-defined threshold rate. The server blade does not fail because of correctable memory errors. Advanced ECC provides additional protection over Standard ECC because it is possible to correct certain memory errors that would otherwise be uncorrectable and result in a server blade failure.

Whereas standard ECC can correct single-bit memory errors, Advanced ECC can correct single-bit memory errors and multi-bit memory errors if all failed bits are on the same DRAM device on the DIMM.

DIMM installation guidelines

Observe the following guidelines when installing additional memory:

- Install only ECC PC2-5300 Registered DDR2 SDRAM DIMMs that meet the following specifications:
  - Supply voltage: 1.8 V
  - Bus width: 72 bits
- Observe the following special conditions when installing memory with a second processor:
  - Processor 2 can be installed without memory.
  - Any memory installed into banks for processor 2 can be used only if processor 2 is installed.
- DIMMs must always be installed in pairs.
- HP recommends installing DIMMs with the greatest capacity in the banks farthest from each populated processor first.
- DIMMs installed in the same memory bank must have the same part number.
- DIMMs installed in different banks can be of different sizes.

CAUTION: Always wear an antistatic wrist strap when working inside the server.

The server blade supports multiple memory modes, based on DIMM population. Use RBSU ("HP ROM-Based Setup Utility" on page 43) to select a mode (System will default to Advanced ECC).

DIMM population order

Configuration	Bank A 1A and 2A	Bank B 3B and 4B	Bank C 5C and 6C	Bank D 7D and 8D
Single processor	1st	2nd	—	—
Dual processor	1st	3rd	2nd	4th

Installing DIMMs

1. Power down the server blade (on page 12).
2. Remove the server blade (on page 13).
3. Remove the access panel (on page 14).
4. Remove the air baffles.

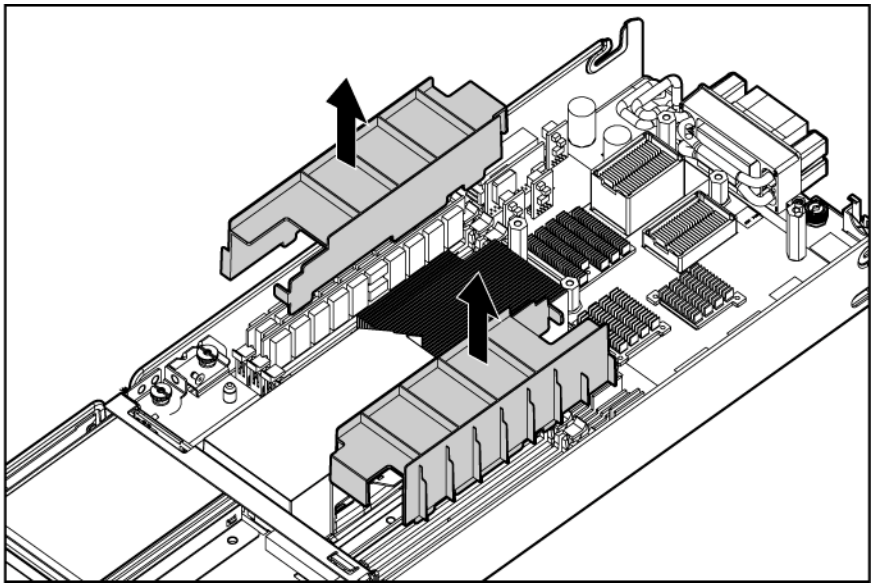

5. Open the DIMM slot latches.

6. Install the DIMM.

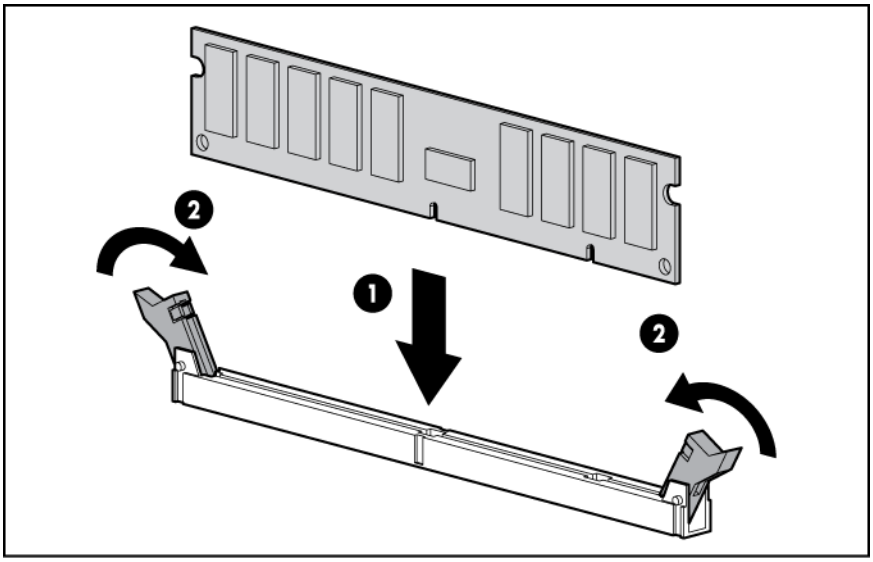

7. Install the air baffles.
8. Install the access panel (on page 14).
9. Install the server blade ("Installing a server blade" on page 18).

Mezzanine card option

Optional mezzanine cards are classified as Type I mezzanine cards and Type II mezzanine cards. The card type determines where it can be installed in the server blade.

- Install Type I mezzanine cards on either mezzanine 1 connector or mezzanine 2 connector.
- Install Type II mezzanine cards only on mezzanine 2 connector.

Optional mezzanine cards enable network connectivity and provide Fibre Channel support. For mezzanine card locations, see the system board components (on page 9).

For mezzanine card signal mapping, see the *HP ProLiant BL465c G6 Server Blade Installation Instructions* that ship with this server blade.

To install the component:

1. Power down the server blade (on page 12).
2. Remove the server blade (on page 13).
3. Remove the access panel (on page 14).

4. Remove the mezzanine connector cover.

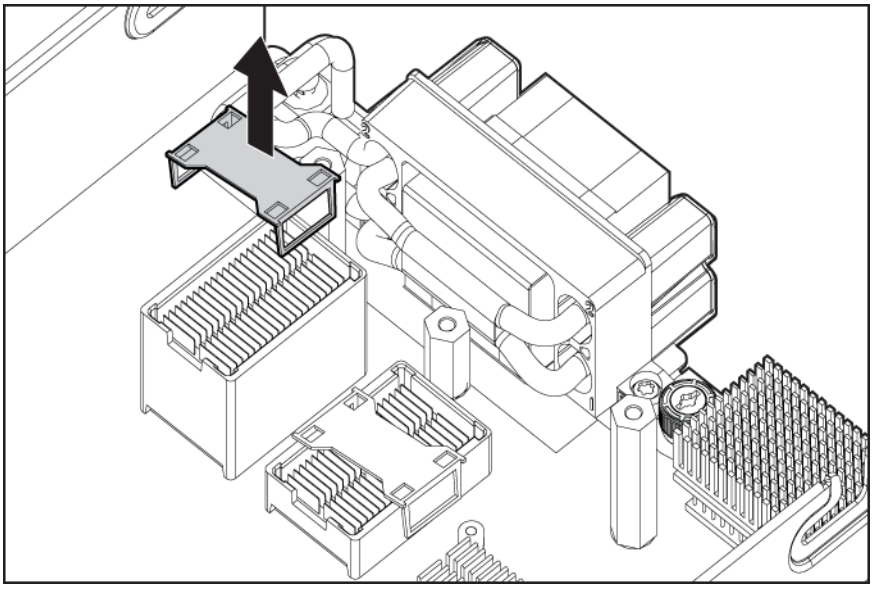

5. Install the mezzanine card. Press down on the connector to seat the board.

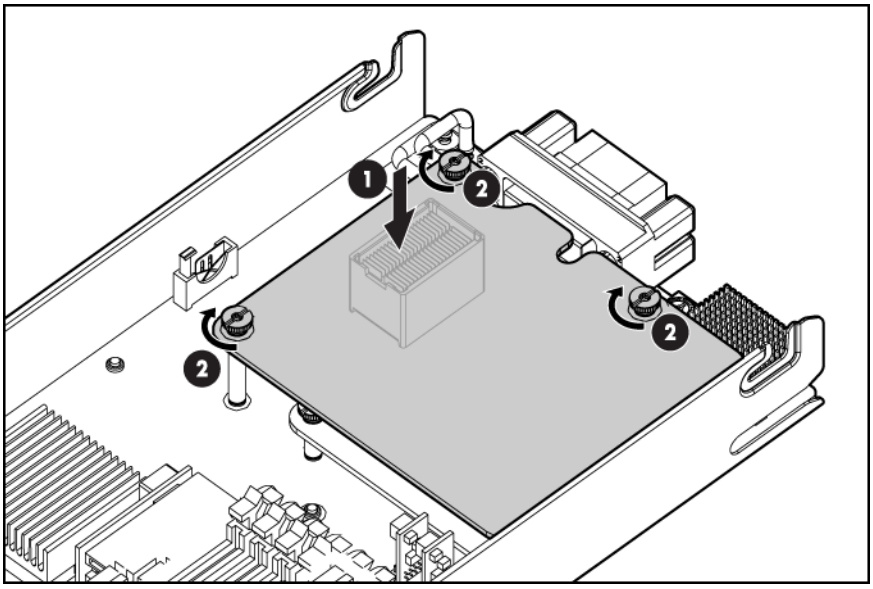

6. Install the access panel (on page 14).
7. Install the server blade ("Installing a server blade" on page 18).

HP Smart Array E200i Battery-Backed Write Cache module option

To install the component:

1. Power down the server blade (on page 12).
2. Remove the server blade (on page 13).
3. Remove the access panel (on page 14).
4. Remove the hard drives.

5. Remove the hard drive backplane.

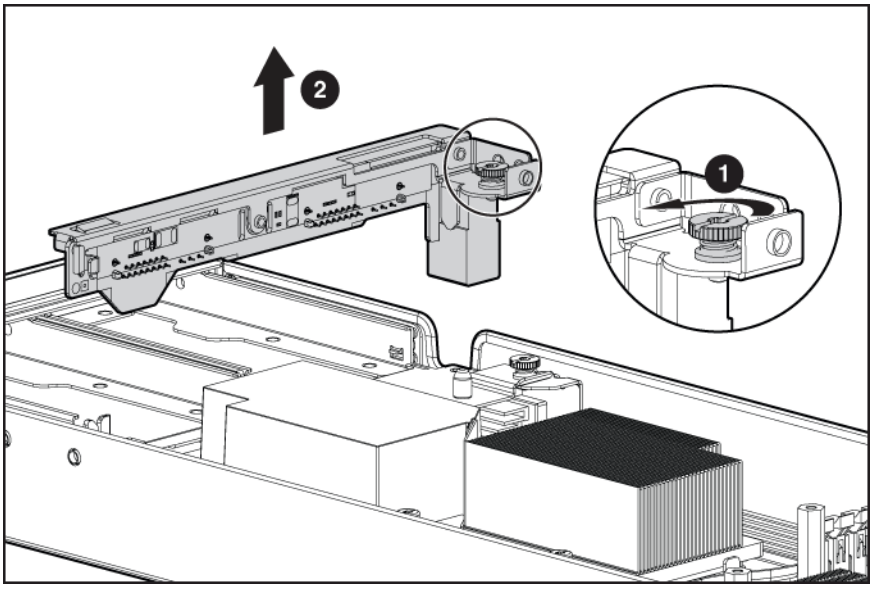

6. Remove the front panel/hard drive cage assembly.

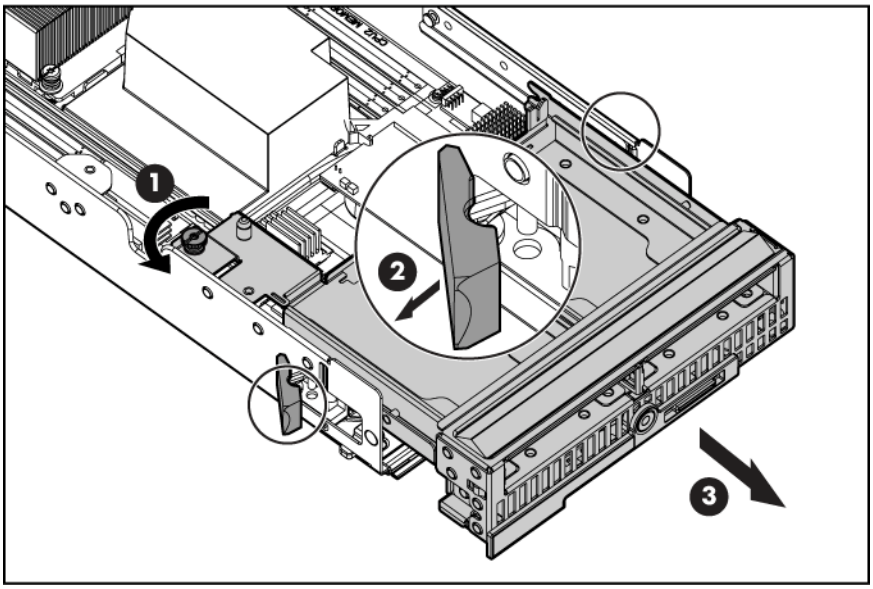

7. Remove the USB key, if installed.

8. Remove the Smart Array E200i cache module.

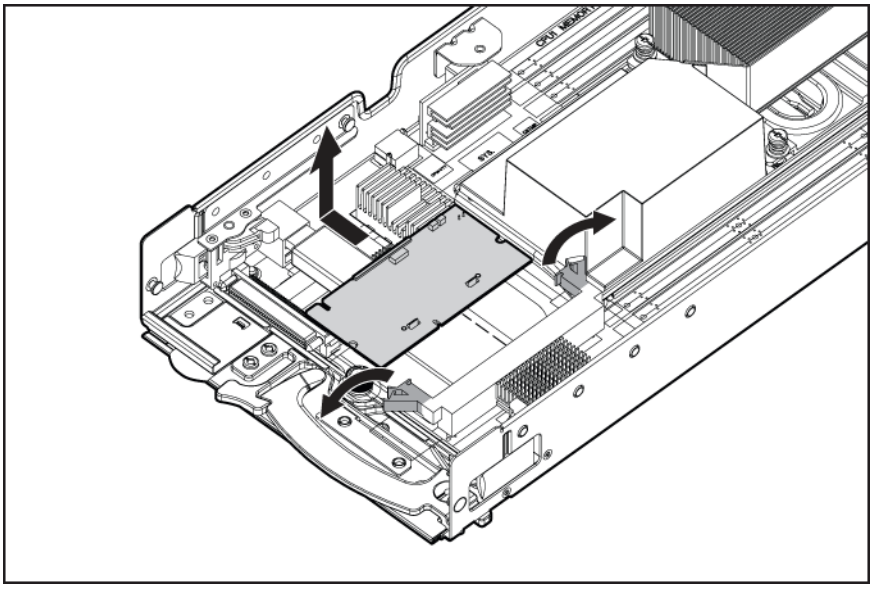

9. Install the Smart Array E200i battery pack on the new cache module provided in the option kit.

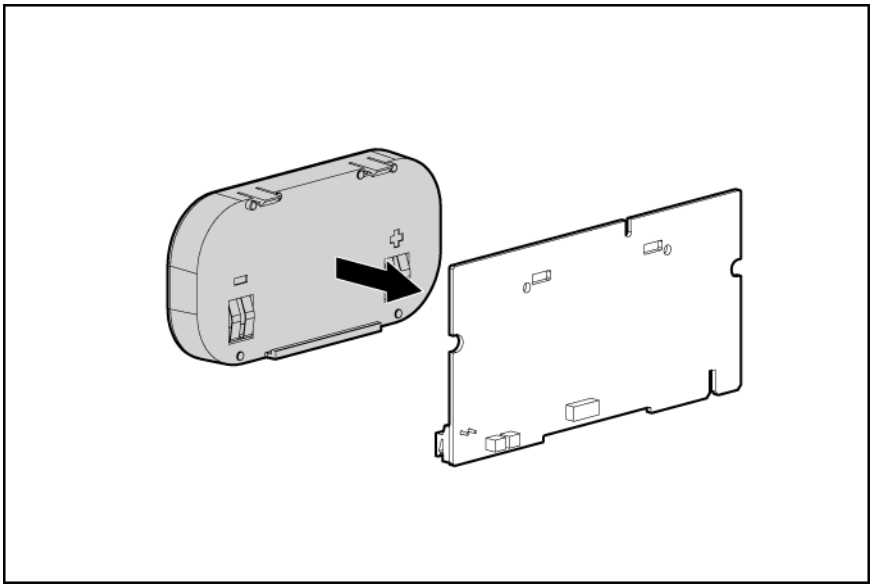

10. Install the Smart Array E200i cache module.

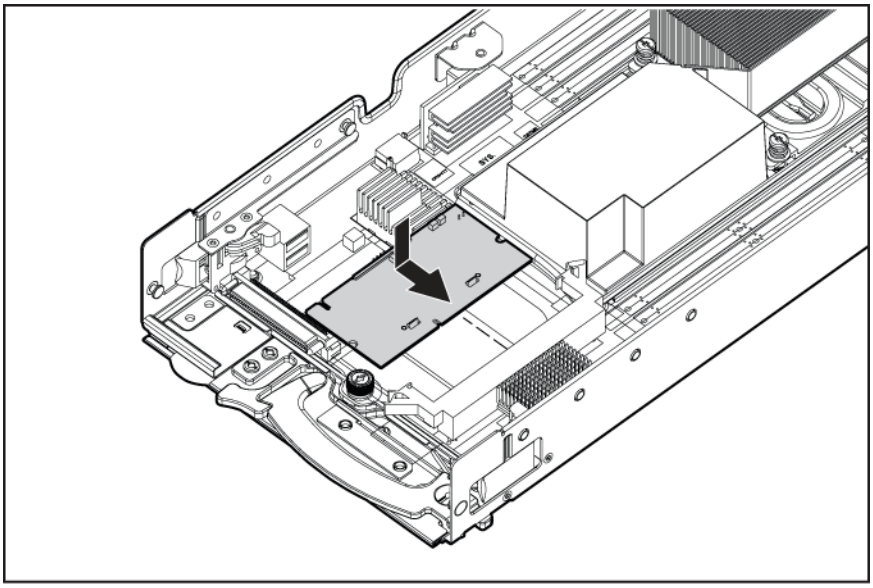

11. Install the USB key, if necessary.
12. Install the front panel/hard drive cage assembly.
13. Install the hard drive backplane.
14. Install the hard drives ("Hard drive option" on page 20).
15. Install the access panel (on page 14).
16. Install the server blade ("Installing a server blade" on page 18).

Cabling

Using the HP c-Class Blade SUV Cable

The HP c-Class Blade SUV Cable enables the user to perform server blade administration, configuration, and diagnostic procedures by connecting video and USB devices directly to the server blade. For SUV cable connectors, see "HP c-Class Blade SUV Cable (on page 11)."

Connecting locally to a server blade with video and USB devices

Use the local I/O cable to connect a monitor and any of the following USB devices:

- USB hub
- USB keyboard
- USB mouse
- USB CD/DVD-ROM drive
- USB diskette drive

Numerous configurations are possible. This section offers two possible configurations.

Accessing a server blade with local KVM

For this configuration, a USB hub is not necessary. To connect additional devices, use a USB hub.

> △ **CAUTION:** Before disconnecting the SUV cable from the connector, always squeeze the release buttons on the sides of the connector. Failure to do so can result in damage to the equipment.

1. Connect the SUV cable to the server blade.
2. Connect the video connector to a monitor.
3. Connect a USB mouse to one USB connector.

4. Connect a USB keyboard to the second USB connector.

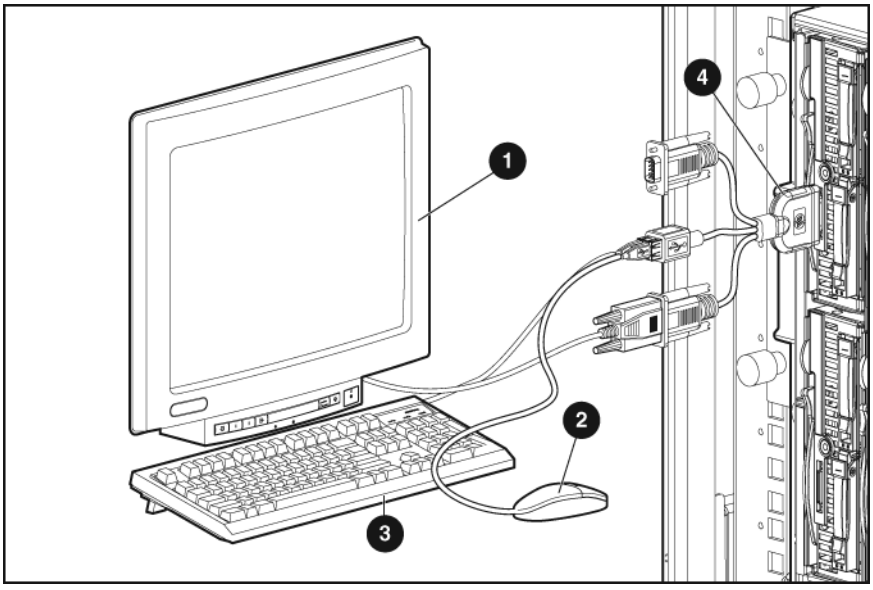

Item	Description
1	Monitor
2	USB mouse
3	USB keyboard
4	HP c-Class Blade SUV Cable

Accessing a server blade with local media devices

Use the following configuration when configuring a server blade or loading software updates and patches from a USB CD/DVD-ROM or a USB diskette.

1. Connect the local I/O cable to the server blade.
2. Connect the video connector to a monitor.
3. Connect a USB hub to one USB connector.
4. Connect the following to the USB hub:
   - USB CD/DVD-ROM drive
   - USB keyboard
   - USB mouse
   - USB diskette

NOTE: Use a USB hub when connecting a USB diskette drive and/or USB CD-ROM drive to the server blade. The USB hub provides additional connections.

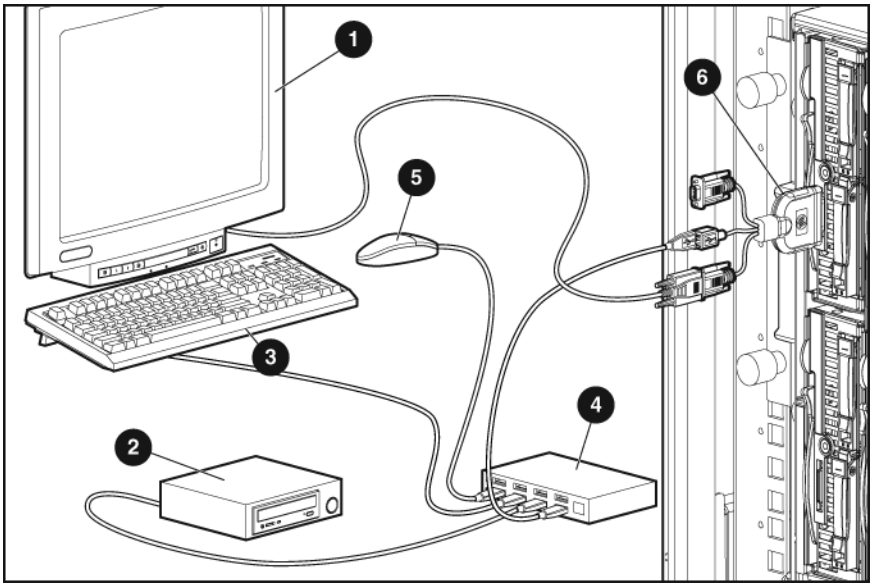

Item	Description
1	Monitor
2	USB CD/DVD-ROM drive or diskette drive
3	USB keyboard
4	USB hub
5	USB mouse
6	Local I/O cable

Software and configuration utilities

Server blade deployment tools

Software drivers and additional components

HP offers the following additional software components for server blades:

- Health and Wellness driver and IML viewer
- iLO 2 Management interface driver
- Rack infrastructure interface service

For Microsoft® Windows® OS users, these items are included in the HP ProLiant iLO 2 Standard Blade Edition, available from the HP website (http://www.hp.com/servers/lights-out).

Linux OS users can download these components from the HP website (http://www.hp.com/products/servers/linux).

For information on how to use these components with a Linux OS, see the HP website (http://h18000.www1.hp.com/products/servers/linux/documentation.html).

HP BladeSystem c-Class Advanced management

iLO 2 is a standard component of ProLiant c-Class server blades that provides server health and remote server blade manageability. Its features are accessed from a network client device using a supported web browser. In addition to other features, iLO 2 provides keyboard, mouse, and video (text and graphics) capability for a server blade, regardless of the state of the host OS or host server blade.

iLO 2 includes an intelligent microprocessor, secure memory, and a dedicated network interface. This design makes iLO 2 independent of the host server blade and its OS. iLO 2 provides remote access to any authorized network client, sends alerts, and provides other server blade management functions.

Using a supported web browser, you can:

- Remotely access the console of the host server blade, including all text mode and graphics mode screens with full keyboard and mouse controls.
- Remotely power up, power down, or reboot the host server blade.
- Remotely boot a host server blade to a virtual media image to perform a ROM upgrade or install an OS.
- Send alerts from iLO 2 regardless of the state of the host server blade.
- Access advanced troubleshooting features provided by iLO 2.
- Launch a web browser, use SNMP alerting, and diagnose the server blade with HP SIM.
- Configure static IP bay settings for the dedicated iLO 2 management NICs on each server blade in an enclosure for faster deployment.

To connect to the server blade using iLO 2, install the server blade in an enclosure. Onboard Administrator assigns an IP address to enable iLO 2 connectivity to the server blade.

The c-Class tab enables you to control specific settings for the HP BladeSystem. iLO 2 also provides web-based status for the HP BladeSystem configuration.

For detailed information about iLO 2, refer to the *HP Integrated Lights-Out User Guide* on the HP website (http://www.hp.com/servers/lights-out).

Network-based PXE deployment

PXE is a component of the Intel® WfM specification. The PXE model enables server blades to load and execute an NBP from a PXE server and to execute a pre-configured image. The image can be an OS image created by software utilities or a boot diskette image. This feature enables a user to configure a server blade and install an OS over a network.

Deployment overview

When a PXE-enabled target server blade boots, it obtains an IP address from a DHCP server. The target server blade obtains the name of the NBP from the appropriate boot server. Then, the target server blade uses TFTP to download the NBP from the boot server and executes the image.

IMPORTANT: To connect to a network with a Pass-Thru module, always connect the Pass-Thru module to a network device that supports Gigabit speed.

For each server blade being deployed, the PXE server must be connected to the NIC designated for PXE. The server blade defaults PXE functions to NIC 1, but any of the NC series NICs in the server blade can be designated for PXE in RBSU. For NIC connector locations, refer to the documentation included with the server blade.

NOTE: Actual NIC numeration depends on several factors, including the OS installed on the server blade.

To deploy an OS to multiple server blades, install a PXE deployment server on a network.

Deployment infrastructure

IMPORTANT: To connect to a network with a Pass-Thru module, always connect the Pass-Thru module to a network device that supports Gigabit speed.

To establish a network-based PXE deployment infrastructure, provide the following software and minimum hardware:

- Client PC (administrative workstation)
  - AMD Athlon™ XP processor (700 MHz or greater recommended), AMD Athlon™ 64 processor, or Intel® Pentium® III or higher processor (700 MHz or greater recommended)
  - 128 MB of RAM
  - Microsoft® Windows® 2000 Professional or Microsoft® Windows® XP OS
  - Microsoft® Internet Explorer 5.5 or above with 128-bit encryption
  - Ethernet NIC with 10/100 RJ-45 connector

- TCP/IP networking and an IP address compatible with one of the following: the iLO 2 Diagnostic Port IP address or an assigned DHCP or static IP address
- CD-ROM drive, CD/DVD-ROM drive, and/or diskette drive
- Any of the following Java™ Runtime Environment versions:

  1.3.1_02

  1.3.1_07

  1.3.1_08

  1.4.1 for Windows® users only

  1.4.2 for Linux users only

  Access the Java™ Runtime Environment versions at the HP website (http://java.sun.com/products/archive/index.html).

- DHCP server (IP address assignment)
  - AMD Athlon™ XP processor (700 MHz or greater recommended), AMD Athlon™ 64 processor, or Intel® Pentium® or Pentium® II 200-MHz or faster processor
  - 64 MB of RAM
  - 64 MB of free hard drive space
  - 10-Mb/s network adapter
- PXE deployment server (storing boot images)
  - AMD Athlon™ XP processor (700 MHz or greater recommended), AMD Athlon™ 64 processor, or Intel® Pentium® III or higher processor (500 MHz recommended)
  - 256 MB of RAM
  - 10-Mb/s network adapter
  - CD-ROM drive
- Windows® repository server (Windows® or Linux deployment)
  - Windows® 2000 or Windows Server® 2003 OS installed
  - Network connection
  - CD-ROM drive
  - 1.5 GB of available disk space
  - TCP/IP networking and an IP address compatible with one of the following: the iLO 2 Diagnostic Port IP address or an assigned DHCP or static IP address
  - CD-ROM drive and/or diskette drive
  - Any of the following Java™ Runtime Environment versions:

    1.3.1_02

    1.3.1_07

    1.3.1_08

    1.4.1 for Windows® users only

    1.4.2 for Linux users only

    Access the Java™ Runtime Environment versions at the HP website (http://java.sun.com/products/archive/index.html).

- Network server with an OS installed

Deployment methods

Three primary deployment methods are supported:

IMPORTANT: To deploy a server blade without the RDP, create a bootable diskette or image of a bootable diskette.

- PXE deployment (on page 40)
- CD-ROM deployment (on page 41)
- Diskette image deployment (on page 42)

PXE deployment

PXE enables server blades to load an image over the network from a PXE server, and then execute it in memory. The first NIC on the server blade is the default PXE boot NIC, but any of the other NC series NICs can be configured to boot PXE. For more information, refer to "Network-based PXE deployment (on page 38)."

NOTE: Actual NIC numeration depends on several factors, including the OS installed on the server blade.

HP recommends using one of the following methods for PXE deployment:

- HP ProLiant Essentials RDP ("HP ProLiant Essentials Rapid Deployment Pack" on page 40)
- SmartStart Scripting Toolkit (on page 40)

A number of third-party PXE deployment tools are available for Windows® and Linux. For additional information, refer to the HP website (ftp://ftp.compaq.com/pub/products/servers/management/pxe_wp.pdf).

HP ProLiant Essentials Rapid Deployment Pack

NOTE: To deploy server blades in an existing server blade enclosure, always use the most recent version of RDP available at the HP website (http://www.hp.com/servers/rdp).

The RDP software is the preferred method for rapid, high-volume server deployments. The RDP software integrates two powerful products: Altiris Deployment Solution and the HP ProLiant Integration Module.

The intuitive graphical user interface of the Altiris Deployment Solution console provides simplified point-and-click and drag-and-drop operations that enable you to deploy target servers, including server blades, remotely. It enables you to perform imaging or scripting functions and maintain software images.

For more information about the RDP, refer to the HP ProLiant Essentials Rapid Deployment Pack CD or refer to the HP website (http://www.hp.com/servers/rdp).

SmartStart Scripting Toolkit

The SmartStart Scripting Toolkit is a server deployment product that delivers an unattended automated installation for high-volume server deployments. The SmartStart Scripting Toolkit is designed to support ProLiant BL, ML, and DL servers. The toolkit includes a modular set of utilities and important documentation that describes how to apply these new tools to build an automated server deployment process.

Using SmartStart technology, the Scripting Toolkit provides a flexible way to create standard server configuration scripts. These scripts are used to automate many of the manual steps in the server configuration process. This automated server configuration process cuts time from each server deployed, making it possible to scale server deployments to high volumes in a rapid manner.

For more information, and to download the SmartStart Scripting Toolkit, refer to the HP website (http://www.hp.com/servers/sstoolkit).

CD-ROM deployment

CD-ROM deployment involves using a bootable CD that executes scripts to configure the hardware and install the OS. After the OS is configured, the server blade can access the network to locate the scripts and files necessary for deployment. Before beginning the deployment process, connect the server blade to the network.

NOTE: For more information about hardware and cabling configurations, see the documents that ship with the enclosure.

Two methods are available for CD-ROM deployment:

- iLO virtual CD-ROM (on page 41)
- USB CD-ROM (on page 41)

iLO virtual CD-ROM

To deploy with a boot CD:

1. Do one of the following:
   - Insert the boot CD into the client PC using the iLO 2 Remote Console.
   - Use iLO 2 to create an image file of the boot CD.
   - Copy the image of the boot CD to a location on the network or the client PC hard drive.
2. Remotely access the server blade through iLO 2. See "HP BladeSystem c-Class advanced management (on page 37)."
3. Click the **Virtual Media** tab.
4. Select the **Virtual Media** applet.
5. Use the Virtual Media applet to select the local CD or image file and connect the Virtual CD to the server blade.
6. Use the iLO 2 Virtual Power Button feature to reboot the server blade.
7. After the server blade boots, follow the normal network installation procedure for the OS.

USB CD-ROM

This method uses SmartStart to facilitate loading the OS. However, SmartStart also allows for manual loading of the OS and drivers.

To deploy with a boot CD:

1. Use the local I/O cable to connect a USB CD-ROM drive to the server blade. Refer to "Connecting locally to a server blade with video and USB devices (on page 34)."
2. Insert the boot CD into the USB CD-ROM drive.
3. Reboot the server blade.

4. After the server blade boots, follow the normal installation procedure for an OS.

Windows Server™ 2003 cannot be installed from a USB CD-ROM on the I/O cable if the hard drive is completely blank (no partitions defined). To install Windows Server™ 2003, use one of the following methods:

- Make a partition on the hard drive that Windows Server™ 2003 will be loaded on.
- Use the SmartStart CD 7.0 or higher.
- Use the Rapid Deployment Pack.

Diskette image deployment

To deploy with a diskette image, the user creates a DOS-based network-enabled boot diskette that executes a script that configures the hardware and installs the OS. The diskette enables the server blade to access the required deployment scripts and files on the network.

This method implies a deployment infrastructure that may include an administrator workstation, PXE server, Microsoft® Windows® file share, or a Linux file share. For more information, refer to "Deployment infrastructure (on page 38)."

Before beginning the deployment process, connect the server blade to the network.

> **NOTE:** For more information about hardware and cabling configurations, see the documents that ship with the enclosure.

Two methods are available for diskette image deployment:

- iLO virtual floppy (on page 42)
- PXE ("PXE deployment" on page 40)

iLO virtual floppy

To deploy with a boot diskette:

1. Do one of the following:
   - Insert the boot diskette into the client PC using the iLO 2 Remote Console.
   - Use iLO 2 to create an image file of the boot diskette.
   - Copy the image of the boot diskette to a location on the network or the client PC hard drive.
2. Remotely access the server blade through iLO 2. See "HP BladeSystem c-Class advanced management (on page 37)."
3. Click the **Virtual Media** tab.
4. Select the **Virtual Media** applet.
5. Use the Virtual Media applet to select the local diskette or image file and connect the Virtual CD to the server blade.
6. Use the iLO 2 Virtual Power Button feature to reboot the server blade.
7. After the server blade boots, follow the normal network installation procedure for the OS.

Creating a boot diskette

The SmartStart Scripting Toolkit provides the tools and information for creating a boot diskette. For details, refer to the *SmartStart Scripting Toolkit User Guide* and download the latest version of the software from the HP website (http://www.hp.com/servers/sstoolkit).

As an alternative method, configure the hardware manually with RBSU and the iLO 2 remote console. With this method, the disk is more generic and integrates with an existing network OS installation process. For more information, refer to "HP BladeSystem c-Class advanced management (on page 37)."

To operate properly, the server blade must have a supported OS. For the latest information on a supported OS, refer to the HP website (http://www.hp.com/go/supportos).

Configuration tools

SmartStart software

SmartStart is a collection of software that optimizes single-server setup, providing a simple and consistent way to deploy server configuration. SmartStart has been tested on many ProLiant server products, resulting in proven, reliable configurations.

SmartStart assists the deployment process by performing a wide range of configuration activities, including:

- Configuring hardware using embedded configuration utilities, such as RBSU and ORCA
- Preparing the system for installing "off-the-shelf" versions of leading operating system software
- Installing optimized server drivers, management agents, and utilities automatically with every assisted installation
- Testing server hardware using the Insight Diagnostics Utility ("HP Insight Diagnostics" on page 51)
- Installing software drivers directly from the CD. With systems that have internet connection, the SmartStart Autorun Menu provides access to a complete list of ProLiant system software.
- Enabling access to the Array Configuration Utility (on page 45), Array Diagnostic Utility (on page 52), and Erase Utility (on page 48)

SmartStart is included in the HP ProLiant Essentials Foundation Pack. For more information about SmartStart software, refer to the HP ProLiant Essentials Foundation Pack or the HP website (http://h18013.www1.hp.com/products/servers/management/smartstart/index.html).

HP ROM-Based Setup Utility

RBSU is a configuration utility embedded in ProLiant servers that performs a wide range of configuration activities that can include the following:

- Configuring system devices and installed options
- Enabling and disabling system features
- Displaying system information
- Selecting the primary boot controller
- Configuring memory options

- Language selection

For more information on RBSU, see the *HP ROM-Based Setup Utility User Guide* on the Documentation CD or the HP website (http://www.hp.com/support/smartstart/documentation).

Using RBSU

To use RBSU, use the following keys:

- To access RBSU, press the **F9** key during power-up when prompted.
- To navigate the menu system, use the arrow keys.
- To make selections, press the **Enter** key.
- To access Help for a highlighted configuration option, press the **F1** key.

IMPORTANT: RBSU automatically saves settings when you press the **Enter** key. The utility does not prompt you for confirmation of settings before you exit the utility. To change a selected setting, you must select a different setting and press the **Enter** key.

Default configuration settings are applied to the server at one of the following times:

- Upon the first system power-up
- After defaults have been restored

Default configuration settings are sufficient for proper typical server operation, but configuration settings can be modified using RBSU. The system will prompt you for access to RBSU with each power-up.

Auto-configuration process

The auto-configuration process automatically runs when you boot the server for the first time. During the power-up sequence, the system ROM automatically configures the entire system without needing any intervention. During this process, the ORCA utility, in most cases, automatically configures the array to a default setting based on the number of drives connected to the server.

NOTE: The server may not support all the following examples.

NOTE: If the boot drive is not empty or has been written to in the past, ORCA does not automatically configure the array. You must run ORCA to configure the array settings.

Drives installed	Drives used	RAID level
1	1	RAID 0
2	2	RAID 1
3, 4, 5, or 6	3, 4, 5, or 6	RAID 5
More than 6	0	None

To change any ORCA default settings and override the auto-configuration process, press the **F8** key when prompted.

By default, the auto-configuration process configures the system for the English language. To change any default settings in the auto-configuration process (such as the settings for language, operating system, and

primary boot controller), execute RBSU by pressing the **F9** key when prompted. After the settings are selected, exit RBSU and allow the server to reboot automatically.

For more information on RBSU, see the *HP ROM-Based Setup Utility User Guide* on the Documentation CD or the HP website (http://www.hp.com/support/smartstart/documentation).

Boot options

Near the end of the boot process, the boot options screen is displayed. This screen is visible for several seconds before the system attempts to boot from a supported boot device. During this time, you can do the following:

- Access RBSU by pressing the **F9** key.
- Access the System Maintenance Menu (which enables you to launch ROM-based Diagnostics or Inspect) by pressing the **F10** key.
- Force a PXE Network boot by pressing the **F12** key.

BIOS Serial Console

BIOS Serial Console allows you to configure the serial port to view POST error messages and run RBSU remotely through a serial connection to the server COM port. The server that you are remotely configuring does not require a keyboard and mouse.

For more information about BIOS Serial Console, see the *BIOS Serial Console User Guide* on the Documentation CD or the HP website (http://www.hp.com/support/smartstart/documentation).

Array Configuration Utility

ACU is a browser-based utility with the following features:

- Runs as a local application or remote service
- Supports online array capacity expansion, logical drive extension, assignment of online spares, and RAID or stripe size migration
- Suggests the optimum configuration for an unconfigured system
- Provides different operating modes, enabling faster configuration or greater control over the configuration options
- Remains available any time that the server is on
- Displays on-screen tips for individual steps of a configuration procedure

For optimum performance, the minimum display settings are 800 × 600 resolution and 256 colors. Servers running Microsoft® operating systems require Internet Explorer 5.5 (with Service Pack 1) or later. For Linux servers, refer to the README.TXT file for additional browser and support information.

For more information, refer to the *Configuring Arrays on HP Smart Array Controllers Reference Guide* on the Documentation CD or the HP website (http://www.hp.com).

SAN configuration

The server blade provides FC support for SAN implementations. This solution uses an optional FCA that offers redundant SAN connectivity and optimization for HP StorageWorks products. The server blade is

also compatible with certain third-party SAN products. For more information, refer to the documentation that ships with the FCA option.

For optimal SAN connectivity, observe the following guidelines:

- The FCA option is installed correctly in the server blade. Refer to the documentation that ships with the FCA option.
- An FC-compatible interconnect is installed in the enclosure. Refer to the documentation that ships with the interconnect option.
- The server blade enclosure management module firmware is up-to-date. Refer to the HP Business Support Center website (http://www.hp.com/support).
- The server blade is cabled properly to a supported SAN.
- SAN storage drivers are loaded. Refer to supporting white papers and the HP website (http://www.hp.com/servers/rdp).

For SAN configuration information for the server blade, refer to the *HP StorageWorks SAN Design Reference Guide* on the HP website (http://h18000.www1.hp.com/products/storageworks/san/documentation.html).

Re-entering the server serial number and product ID

After you replace the system board, you must re-enter the server serial number and the product ID.

1. During the server startup sequence, press the **F9** key to access RBSU.
2. Select the **System Options** menu.
3. Select **Serial Number**. The following warning is displayed:

   ```
   WARNING! WARNING! WARNING! The serial number is loaded into the system
   during the manufacturing process and should NOT be modified. This option
   should only be used by qualified service personnel. This value should
   always match the serial number sticker located on the chassis.
   ```

4. Press the **Enter** key to clear the warning.
5. Enter the serial number and press the **Enter** key.
6. Select **Product ID**.
7. Enter the product ID and press the **Enter** key.
8. Press the **Esc** key to close the menu.
9. Press the **Esc** key to exit RBSU.
10. Press the **F10** key to confirm exiting RBSU. The server will automatically reboot.

Option ROM Configuration for Arrays

Before installing an operating system, you can use the ORCA utility to create the first logical drive, assign RAID levels, and establish online spare configurations.

The utility also provides support for the following functions:

- Reconfiguring one or more logical drives
- Viewing the current logical drive configuration
- Deleting a logical drive configuration

- Setting the controller to be the boot controller

If you do not use the utility, ORCA will default to the standard configuration.

For more information regarding array controller configuration, refer to the controller user guide.

For more information regarding the default configurations that ORCA uses, refer to the *HP ROM-Based Setup Utility User Guide* on the Documentation CD.

Management tools

Automatic Server Recovery

ASR is a feature that causes the system to restart when a catastrophic operating system error occurs, such as a blue screen, ABEND, or panic. A system fail-safe timer, the ASR timer, starts when the System Management driver, also known as the Health Driver, is loaded. When the operating system is functioning properly, the system periodically resets the timer. However, when the operating system fails, the timer expires and restarts the server.

ASR increases server availability by restarting the server within a specified time after a system hang or shutdown. At the same time, the HP SIM console notifies you by sending a message to a designated pager number that ASR has restarted the system. You can disable ASR from the HP SIM console or through RBSU.

ROMPaq utility

The ROMPaq utility enables you to upgrade the system firmware (BIOS). To upgrade the firmware, insert a ROMPaq diskette into the diskette drive or ROMPaq USB Key into an available USB port and boot the system. Online versions of the ROMPaq utility are also available for updating the system firmware.

The ROMPaq utility checks the system and provides a choice (if more than one exists) of available firmware revisions.

For more information about the ROMPaq utility, see the HP website (http://www.hp.com/go/support).

Integrated Lights-Out 2 technology

The iLO 2 subsystem is a standard component of selected ProLiant servers that provides server health and remote server manageability. The iLO 2 subsystem includes an intelligent microprocessor, secure memory, and a dedicated network interface. This design makes iLO 2 independent of the host server and its operating system. The iLO 2 subsystem provides remote access to any authorized network client, sends alerts, and provides other server management functions.

Using iLO 2, you can:

- Remotely power up, power down, or reboot the host server.
- Send alerts from iLO 2 regardless of the state of the host server.
- Access advanced troubleshooting features through the iLO 2 interface.
- Diagnose iLO 2 using HP SIM through a web browser and SNMP alerting.

For more information about iLO 2 features (which may require an iLO Advanced Pack or iLO Advanced for BladeSystem license), see the iLO 2 documentation on the Documentation CD or on the HP website (http://www.hp.com/servers/lights-out).

Erase Utility

CAUTION: Perform a backup before running the System Erase Utility. The utility sets the system to its original factory state, deletes the current hardware configuration information, including array setup and disk partitioning, and erases all connected hard drives completely. Refer to the instructions for using this utility.

Run the Erase Utility if you must erase the system for the following reasons:

- You want to install a new operating system on a server with an existing operating system.
- You encounter an error when completing the steps of a factory-installed operating system installation.

The Erase Utility can be accessed from the **Maintenance Utilities** menu of the SmartStart CD ("SmartStart software" on page 43).

StorageWorks library and tape tools

HP StorageWorks L&TT provides functionality for firmware downloads, verification of device operation, maintenance procedures, failure analysis, corrective service actions, and some utility functions. It also provides seamless integration with HP hardware support by generating and emailing support tickets that deliver a snapshot of the storage system.

For more information, and to download the utility, refer to the StorageWorks L&TT website (http://h18006.www1.hp.com/products/storageworks/ltt).

HP Systems Insight Manager

HP SIM is a web-based application that allows system administrators to accomplish normal administrative tasks from any remote location, using a web browser. HP SIM provides device management capabilities that consolidate and integrate management data from HP and third-party devices.

IMPORTANT: You must install and use HP SIM to benefit from the Pre-Failure Warranty for processors, SAS and SATA hard drives, and memory modules.

For additional information, refer to the Management CD in the HP ProLiant Essentials Foundation Pack or the HP SIM website (http://www.hp.com/go/hpsim).

Management Agents

Management Agents provide the information to enable fault, performance, and configuration management. The agents allow easy manageability of the server through HP SIM software, and third-party SNMP management platforms. Management Agents are installed with every SmartStart assisted installation or can be installed through the HP PSP. The Systems Management homepage provides status and direct access to in-depth subsystem information by accessing data reported through the Management Agents. For additional information, refer to the Management CD in the HP ProLiant Essentials Foundation Pack or the HP website (http://www.hp.com/servers/manage).

HP ProLiant Essentials Virtualization Management Software

The ProLiant Essentials Virtual Machine Management Pack and ProLiant Essentials Server Migration Pack plug-ins extend HP Systems Insight Manager capabilities to manage virtual machines.

The Virtual Machine Management Pack provides the following functionality:

- Central management and control of VMware® and Microsoft® virtual machines with physical host to virtual machine association
- Easy identification of VMs or host servers reaching high CPU, memory, or disk utilization levels
- Highly flexible move capabilities that enable live moves and moves to dissimilar host resources
- Back up, template, and alternate host capabilities that enable restoration of VMs on any available host

The Server Migration Pack automates the manual processes required for migrating servers between physical or virtual platforms (P2V, V2P, and V2V), enabling easy migration to appropriate physical or virtual platforms that meet performance and capacity requirements.

For more information about virtualization management software, see the HP website (http://www.hp.com/go/vmmanage).

HP Insight Server Migration software for ProLiant

The HP Insight Server Migration software for ProLiant (SMP) enables administrators to upgrade or replace an existing server blade through server migration. SMP provides an automated, accurate, and affordable method of migrating existing server blades and their content to the latest server technologies.

SMP automates the migration of the operating system, applications, and data from one server blade to another without errors, eliminating the need for manual redeployment of these elements on the new server blade. During the migration process, the software automatically loads new drivers, required for boot, on the destination server blade. The wizard-based user interface simplifies the migration process and requires little experience or training.

For more information about the SMP, see the HP website (http://www.hp.com/go/migrate).

HP Insight Control Environment Suites

HP Insight Control Environment and Insight Control Environment for BladeSystem are integrated suites of software that simplify the management of HP infrastructures.

The HP Insight Control Environment suites are licensing options for HP infrastructure management software delivered on the Insight Control Management DVD. HP Insight Control Environment provides comprehensive management for ProLiant ML/DL customers, while HP Insight Control Environment for BladeSystem provides additional functionality for HP BladeSystem environments.

Using an integrated, wizard-based installer, Insight Control Environment suites install and configure HP Systems Insight Manager (HP SIM) and HP ProLiant Essentials management software rapidly and consistently. Once installed, Insight Control Environment suites deliver enhanced infrastructure stability by improving control over IT assets, increasing responsiveness to business needs through flexible deployment and optimization of compute resources, and providing tangible savings through improved IT staff efficiency.

The software installed by Insight Control Environment suites delivers core management functionality for HP ProLiant server and HP BladeSystem lifecycles, including:

- Rapid server deployment
- Health and performance monitoring
- Comprehensive remote control
- Vulnerability scanning and patch management
- Power and thermal measurement, reporting, capping, and regulation
- Integrated management of virtual and physical infrastructure
- Third-party device management

For more information about Insight Control Environment suites, see the HP website (http://www.hp.com/go/ice).

Redundant ROM support

The server enables you to upgrade or configure the ROM safely with redundant ROM support. The server has a 8-MB ROM that acts as two, separate 4-MB ROMs. In the standard implementation, one side of the ROM contains the current ROM program version, while the other side of the ROM contains a backup version.

NOTE: The server ships with the same version programmed on each side of the ROM.

Safety and security benefits

When you flash the system ROM, ROMPaq writes over the backup ROM and saves the current ROM as a backup, enabling you to switch easily to the alternate ROM version if the new ROM becomes corrupted for any reason. This feature protects the existing ROM version, even if you experience a power failure while flashing the ROM.

USB support and functionality

USB support

HP provides both standard USB 2.0 support and legacy USB 2.0 support. Standard support is provided by the OS through the appropriate USB device drivers. Before the OS loads, HP provides support for USB devices through legacy USB support, which is enabled by default in the system ROM.

Legacy USB support provides USB functionality in environments where USB support is not available normally. Specifically, HP provides legacy USB functionality for the following:

- POST
- RBSU
- Diagnostics
- DOS
- Operating environments which do not provide native USB support

Internal USB functionality

An internal USB connector is available for use with security key devices and USB drive keys. This solution provides for use of a permanent USB key installed in the internal connector, avoiding issues of clearance on the front of the rack and physical access to secure data.

External USB functionality

HP provides external USB support to enable local connection of USB devices for server blade administration, configuration, and diagnostic procedures. For more information, see "Using the HP c-Class Blade SUV Cable (on page 34)."

For additional security, external USB functionality can be disabled through RBSU. Disabling external USB support in RBSU disables the USB connectors on the HP c-Class Blade SUV Cable.

Internal SD support

An internal SD connector is available for use with embedded Hypervisors. This solution provides for use of a permanently installed SD card in the internal connector, decreasing the possibility of tampering or loss.

Diagnostic tools

HP Insight Diagnostics

HP Insight Diagnostics is a proactive server blade management tool, available in both offline and online versions, that provides diagnostics and troubleshooting capabilities to assist IT administrators who verify server blade installations, troubleshoot problems, and perform repair validation.

HP Insight Diagnostics Offline Edition performs various in-depth system and component testing while the OS is not running. To run this utility, launch the SmartStart CD.

HP Insight Diagnostics Online Edition is a web-based application that captures system configuration and other related data needed for effective server blade management. Available in Microsoft® Windows® and Linux versions, the utility helps to ensure proper system operation.

For more information or to download the utility, refer to the HP website (http://www.hp.com/servers/diags).

HP Insight Diagnostics survey functionality

HP Insight Diagnostics (on page 51) provides survey functionality that gathers critical hardware and software information on ProLiant server blades.

This functionality supports operating systems that may not be supported by the server blade. For operating systems supported by the server blade, see the HP website (http://www.hp.com/go/supportos).

If a significant change occurs between data-gathering intervals, the survey function marks the previous information and overwrites the survey data files to reflect the latest changes in the configuration.

Survey functionality is installed with every SmartStart-assisted HP Insight Diagnostics installation, or it can be installed through the HP PSP ("ProLiant Support Packs" on page 53).

NOTE: The current version of SmartStart provides the memory spare part numbers for the server blade. To download the latest version, see the HP website (http://www.hp.com/support).

Integrated Management Log

The IML records hundreds of events and stores them in an easy-to-view form. The IML timestamps each event with 1-minute granularity.

You can view recorded events in the IML in several ways, including the following:

- From within HP SIM ("HP Systems Insight Manager" on page 48)
- From within Survey Utility
- From within operating system-specific IML viewers
  - For NetWare: IML Viewer
  - For Windows®: IML Viewer
  - For Linux: IML Viewer Application
- From within the iLO 2 user interface
- From within HP Insight Diagnostics (on page 51)

For more information, refer to the Management CD in the HP ProLiant Essentials Foundation Pack.

Array Diagnostic Utility

The HP Array Diagnostics Utility is a web-based application that creates a report of all HP storage controllers and disk drives. This report provides vital information to assist in identifying faults or conditions that may require attention. ADU can be accessed from the SmartStart CD ("SmartStart software" on page 43) or downloaded from the HP website (http://www.hp.com).

Remote support and analysis tools

HP Insight Remote Support software

HP Insight Remote Support software delivers secure remote support for your HP Servers and Storage, 24 X 7, so you can spend less time solving problems and more time focused on your business. You can have your systems remotely monitored for hardware failure using secure technology that has been proven at thousands of companies around the world. In many cases, you can avoid problems before they occur. There are two HP Insight Remote Support solutions:

- For small and midsize environments: HP Insight Remote Support Standard provides basic remote monitoring, notification/advisories and service dispatch. It is optimized for environments with 1 to 50 servers and can be installed on a shared HP ProLiant Windows application server. The software supports HP EVA storage devices, HP ProLiant, BladeSystems, HP Integrity and HP 9000 servers running Microsoft Windows, Red Hat Enterprise Linux, Novell SUSE and Novell Netware. Download from the HP website (http://h20392.www2.hp.com/portal/swdepot/displayProductInfo.do?productNumber=RSSWMBASE).

- For midsize and large environments: HP Insight Remote Support Pack (formerly Service Essentials Remote Support Pack) is targeted for larger environments and is integrated with HP Systems Insight Manager (SIM). It provides comprehensive remote monitoring, notification/advisories, dispatch and proactive service support for nearly all HP servers, storage, network and SAN environments, plus selected Dell and IBM Windows servers that have a support obligation with HP. It also enables HP to deliver higher levels of proactive support in line with HP Mission Critical Services support agreements. Download from the HP website (http://h20392.www2.hp.com/portal/swdepot/displayProductInfo.do?productNumber=ISDVD).

Both HP Insight Remote Support solutions are available at no additional cost to customers with a valid warranty on HP technology, an HP Care Pack Service or HP contractual support agreement.

For more information, see the HP website (http://www.hp.com/go/insightremotesupport).

Keeping the system current

Drivers

The server includes new hardware that may not have driver support on all operating system installation media.

If you are installing a SmartStart-supported operating system, use the SmartStart software (on page 43) and its Assisted Path feature to install the operating system and latest driver support.

NOTE: If you are installing drivers from the SmartStart CD or the Software Maintenance CD, refer to the SmartStart website (http://www.hp.com/servers/smartstart) to be sure that you are using the latest version of SmartStart. For more information, refer to the documentation provided with the SmartStart CD.

If you do not use the SmartStart CD to install an operating system, drivers for some of the new hardware are required. These drivers, as well as other option drivers, ROM images, and value-add software can be downloaded from the HP website (http://www.hp.com/support).

IMPORTANT: Always perform a backup before installing or updating device drivers.

ProLiant Support Packs

PSPs represent operating system-specific bundles of ProLiant optimized drivers, utilities, and management agents. Refer to the PSP website (http://h18000.www1.hp.com/products/servers/management/psp.html).

Operating system version support

Refer to the operating system support matrix (http://www.hp.com/go/supportos).

System Online ROM flash component utility

The Online ROM Flash Component Utility enables system administrators to efficiently upgrade system or controller ROM images across a wide range of servers and array controllers. This tool has the following features:

- Works offline and online
- Supports Microsoft® Windows NT®, Windows® 2000, Windows Server® 2003, Novell Netware, and Linux operating systems

  IMPORTANT: This utility supports operating systems that may not be supported by the server. For operating systems supported by the server, see the HP website (http://www.hp.com/support).

- Integrates with other software maintenance, deployment, and operating system tools
- Automatically checks for hardware, firmware, and operating system dependencies, and installs only the correct ROM upgrades required by each target server

To download the tool and for more information, see the HP website (http://www.hp.com/support).

Change control and proactive notification

HP offers Change Control and Proactive Notification to notify customers 30 to 60 days in advance of upcoming hardware and software changes on HP commercial products.

For more information, refer to the HP website (http://www.hp.com/go/pcn).

Care Pack

HP Care Pack Services offer upgraded service levels to extend and expand standard product warranty with easy-to-buy, easy-to-use support packages that help you make the most of your server investments. Refer to the Care Pack website (http://www.hp.com/hps/carepack/servers/cp_proliant.html).

Troubleshooting

Troubleshooting resources

The *HP ProLiant Servers Troubleshooting Guide* provides procedures for resolving common problems and comprehensive courses of action for fault isolation and identification, error message interpretation, issue resolution, and software maintenance on ProLiant servers and server blades. This guide includes problem-specific flowcharts to help you navigate complex troubleshooting processes. To view the guide, select a language:

- English (http://www.hp.com/support/ProLiant_TSG_en)
- French (http://www.hp.com/support/ProLiant_TSG_fr)
- Italian (http://www.hp.com/support/ProLiant_TSG_it)
- Spanish (http://www.hp.com/support/ProLiant_TSG_sp)
- German (http://www.hp.com/support/ProLiant_TSG_gr)
- Dutch (http://www.hp.com/support/ProLiant_TSG_nl)
- Japanese (http://www.hp.com/support/ProLiant_TSG_jp)

The *HP BladeSystem c-Class Enclosure Troubleshooting Guide* provides procedures and solutions for troubleshooting HP BladeSystem c-Class enclosures. This guide explains how to use the Insight Display to troubleshoot enclosures, and it includes a flowchart to help you navigate the troubleshooting process. To view the guide, see the HP website (http://www.hp.com/support/BladeSystem_Enclosure_TSG_en).

Pre-diagnostic steps

WARNING: To avoid potential problems, ALWAYS read the warnings and cautionary information in the server documentation before removing, replacing, reseating, or modifying system components.

IMPORTANT: This guide provides information for multiple servers. Some information may not apply to the server you are troubleshooting. Refer to the server documentation for information on procedures, hardware options, software tools, and operating systems supported by the server.

1. Review the important safety information (on page 56).
2. Gather symptom information (on page 57).
3. Prepare the server for diagnosis (on page 57).
4. Use the Start diagnosis flowchart (on page 59) to begin the diagnostic process.

Important safety information

Familiarize yourself with the safety information in the following sections before troubleshooting the server.

Important safety information

Before servicing this product, read the *Important Safety Information* document provided with the server.

Symbols on equipment

The following symbols may be placed on equipment to indicate the presence of potentially hazardous conditions.



This symbol indicates the presence of hazardous energy circuits or electric shock hazards. Refer all servicing to qualified personnel.

WARNING: To reduce the risk of injury from electric shock hazards, do not open this enclosure. Refer all maintenance, upgrades, and servicing to qualified personnel.



This symbol indicates the presence of electric shock hazards. The area contains no user or field serviceable parts. Do not open for any reason.

WARNING: To reduce the risk of injury from electric shock hazards, do not open this enclosure.



This symbol on an RJ-45 receptacle indicates a network interface connection.

WARNING: To reduce the risk of electric shock, fire, or damage to the equipment, do not plug telephone or telecommunications connectors into this receptacle.

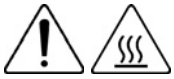

This symbol indicates the presence of a hot surface or hot component. If this surface is contacted, the potential for injury exists.

WARNING: To reduce the risk of injury from a hot component, allow the surface to cool before touching.



5.9 kg

13.00 lb

This symbol indicates that the component exceeds the recommended weight for one individual to handle safely.

WARNING: To reduce the risk of personal injury or damage to the equipment, observe local occupational health and safety requirements and guidelines for manual material handling.



These symbols, on power supplies or systems, indicate that the equipment is supplied by multiple sources of power.

WARNING: To reduce the risk of injury from electric shock, remove all power cords to completely disconnect power from the system.

Warnings

⚠ **WARNING:** Only authorized technicians trained by HP should attempt to repair this equipment. All troubleshooting and repair procedures are detailed to allow only subassembly/module-level repair. Because of the complexity of the individual boards and subassemblies, no one should attempt to make repairs at the component level or to make modifications to any printed wiring board. Improper repairs can create a safety hazard.

⚠ **WARNING:** To reduce the risk of personal injury or damage to the equipment, be sure that:

- The leveling feet are extended to the floor.
- The full weight of the rack rests on the leveling feet.
- The stabilizing feet are attached to the rack if it is a single-rack installation.
- The racks are coupled together in multiple-rack installations.
- Only one component is extended at a time. A rack may become unstable if more than one component is extended for any reason.

Symptom information

Before troubleshooting a server problem, collect the following information:

- What events preceded the failure? After which steps does the problem occur?
- What has been changed since the time the server was working?
- Did you recently add or remove hardware or software? If so, did you remember to change the appropriate settings in the server setup utility, if necessary?
- How long has the server exhibited problem symptoms?
- If the problem occurs randomly, what is the duration or frequency?

To answer these questions, the following information may be useful:

- Run HP Insight Diagnostics (on page 51) and use the survey page to view the current configuration or to compare it to previous configurations.
- Refer to your hardware and software records for information.
- Refer to server LEDs and their statuses.

Prepare the server for diagnosis

1. Be sure the server is in the proper operating environment with adequate power, air conditioning, and humidity control. For required environmental conditions, see the server documentation.
2. Record any error messages displayed by the system.
3. Remove all diskettes, CD-ROMs, DVD-ROMs, and USB drive keys.
4. Power down the server and peripheral devices if you will be diagnosing the server offline. If possible, always perform an orderly shutdown:
   a. Exit any applications.
   b. Exit the operating system.
   c. Power down the server ("Power down the server blade" on page 12).
5. Disconnect any peripheral devices not required for testing (any devices not necessary to power up the server). Do not disconnect the printer if you want to use it to print error messages.

6. Collect all tools and utilities, such as a Torx screwdriver, loopback adapters, ESD wrist strap, and software utilities, necessary to troubleshoot the problem.
   - You must have the appropriate Health Drivers and Management Agents installed on the server.

     To verify the server configuration, connect to the System Management homepage and select **Version Control Agent**. The VCA gives you a list of names and versions of all installed HP drivers, Management Agents, and utilities, and whether they are up-to-date.
   - HP recommends you have access to the server documentation for server-specific information.
   - HP recommends you have access to the SmartStart CD for value-added software and drivers required during the troubleshooting process. Download the current version of SmartStart from the HP website (http://www.hp.com/servers/smartstart).

Service notifications

To view the latest service notifications, refer to the HP website (http://www.hp.com/go/bizsupport). Select the appropriate server model, and then click the **Troubleshoot a Problem** link on the product page.

Loose connections

Action:

- Be sure all power cords are securely connected.
- Be sure all cables are properly aligned and securely connected for all external and internal components.
- Remove and check all data and power cables for damage. Be sure no cables have bent pins or damaged connectors.
- If a fixed cable tray is available for the server, be sure the cords and cables connected to the server are routed correctly through the tray.
- Be sure each device is properly seated. Avoid bending or flexing circuit boards when reseating components.
- If a device has latches, be sure they are completely closed and locked.
- Check any interlock or interconnect LEDs that may indicate a component is not connected properly.
- If problems continue to occur, remove and reinstall each device, checking the connectors and sockets for bent pins or other damage.

Troubleshooting flowcharts

To effectively troubleshoot a problem, HP recommends that you start with the first flowchart in this section, "Start diagnosis flowchart (on page 59)," and follow the appropriate diagnostic path. If the other flowcharts do not provide a troubleshooting solution, follow the diagnostic steps in "General diagnosis flowchart (on page 60)." The General diagnosis flowchart is a generic troubleshooting process to be used when the problem is not server-specific or is not easily categorized into the other flowcharts.

The available flowcharts include:

- Start diagnosis flowchart (on page 59)
- General diagnosis flowchart (on page 60)

- Server blade power-on problems flowchart (on page 62)
- POST problems flowchart (on page 64)
- OS boot problems flowchart (on page 66)
- Server fault indications flowchart (on page 68)

Start diagnosis flowchart

Use the following flowchart to start the diagnostic process.

Item	Refer to
1	"General diagnosis flowchart (on page 60)"
2	"Power-on problems flowchart ("Server blade power-on problems flowchart" on page 62)"
3	"POST problems flowchart (on page 64)"
4	"OS boot problems flowchart (on page 66)"
5	"Server fault indications flowchart (on page 68)"

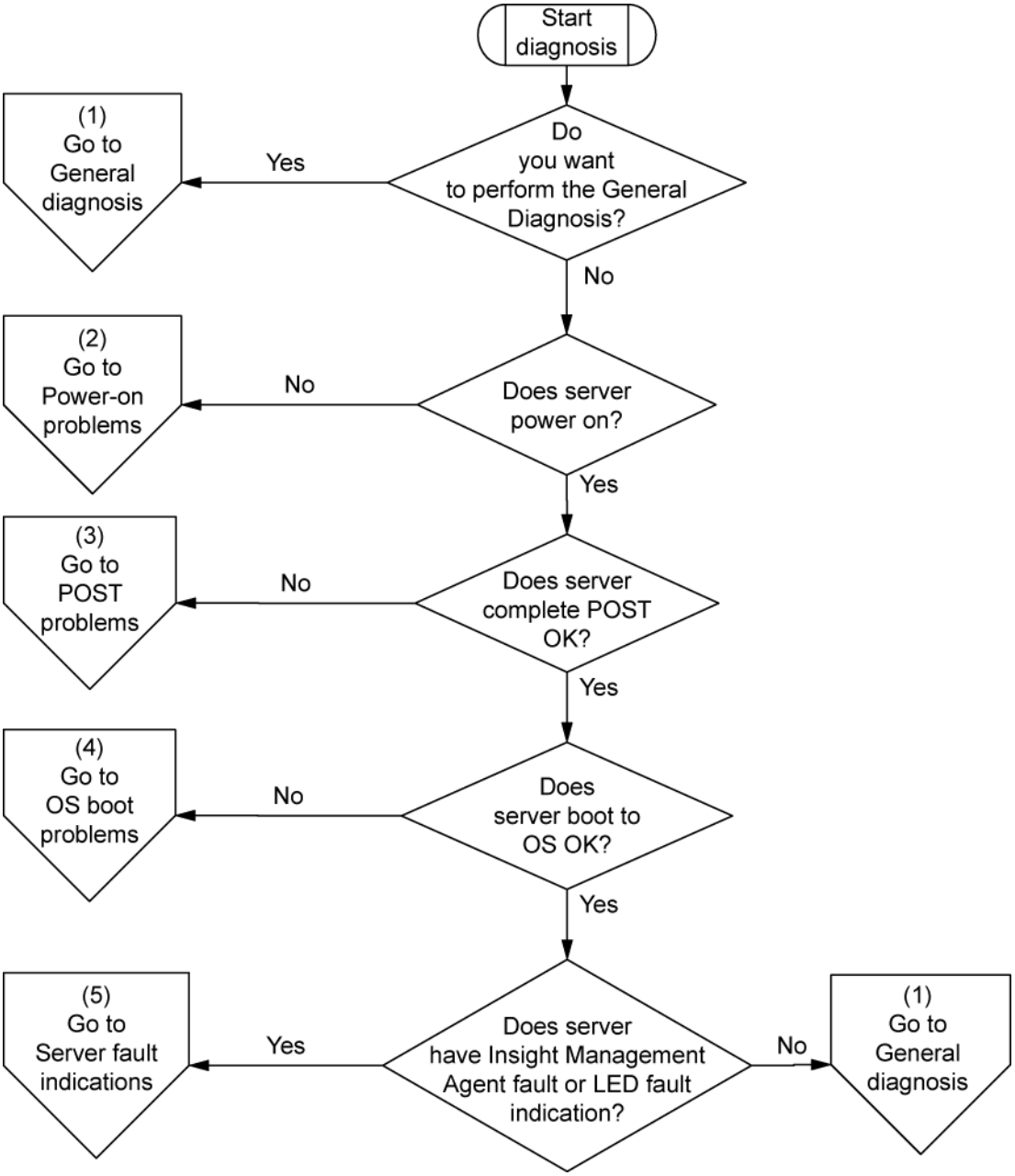

General diagnosis flowchart

The General diagnosis flowchart provides a generic approach to troubleshooting. If you are unsure of the problem, or if the other flowcharts do not fix the problem, use the following flowchart.

Item	See
1	"Symptom information (on page 57)"
2	"Loose connections (on page 58)"
3	"Service notifications (on page 58)"
4	The most recent version of a particular server blade or option firmware is available on the HP Support website (http://www.hp.com/support).

Item	See
5	"General memory problems are occurring" in the *HP ProLiant Servers Troubleshooting Guide* located on the Documentation CD or on the HP website (http://www.hp.com/support)
6	• Maintenance and service guides for p-Class server blades, located on the Documentation CD or the HP website (http://www.hp.com/products/servers/proliant-bl/p-class/info) • Maintenance and service guides for c-Class server blades, located on the Documentation CD or the HP website (http://www.hp.com/go/bladesystem/documentation)
7	• Maintenance and service guides for p-Class server blades, located on the Documentation CD or the HP website (http://www.hp.com/products/servers/proliant-bl/p-class/info) • Maintenance and service guides for c-Class server blades, located on the Documentation CD or the HP website (http://www.hp.com/go/bladesystem/documentation) • "Hardware problems" in the *HP ProLiant Servers Troubleshooting Guide* located on the Documentation CD or on the HP website (http://www.hp.com/support)
8	• "Server information you need" in the *HP ProLiant Servers Troubleshooting Guide* located on the Documentation CD or on the HP website (http://www.hp.com/support) • "Operating system information you need" in the *HP ProLiant Servers Troubleshooting Guide* located on the Documentation CD or on the HP website (http://www.hp.com/support)
9	"HP contact information (on page 81)"

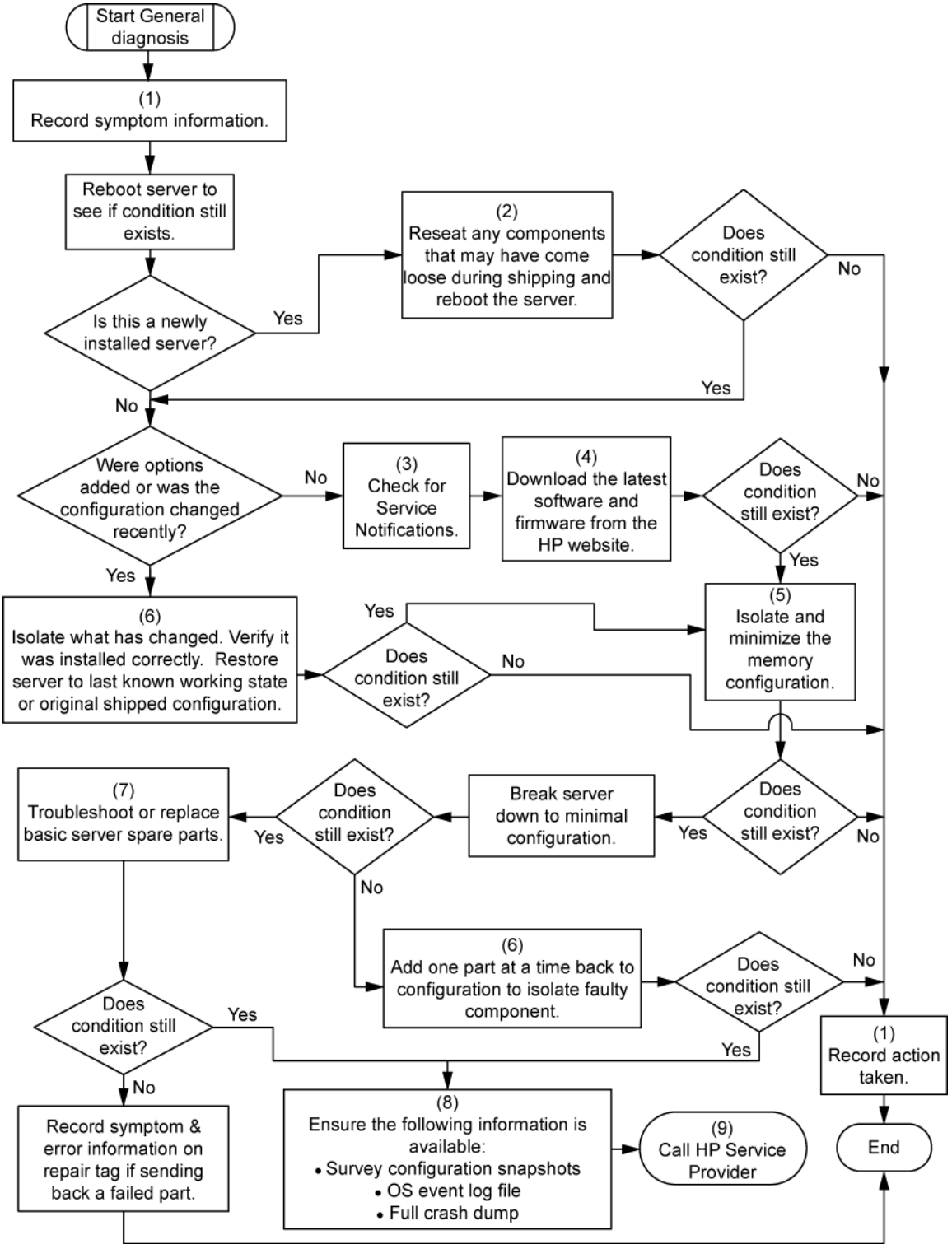

Server blade power-on problems flowchart

Symptoms:

- The server does not power on.
- The system power LED is off or amber.

- The health LED is red or amber.

> **NOTE:** For the location of server LEDs and information on their statuses, refer to the server documentation.

Possible causes:

- Improperly seated or faulty power supply
- Loose or faulty power cord
- Power source problem
- Power on circuit problem
- Improperly seated component or interlock problem
- Faulty internal component

Item	See
1	"Component identification (on page 6, "System board components" on page 9)"
2	Maintenance and service guides for c-Class server blades, located on the HP website (http://www.hp.com/go/bladesystem/documentation)
3	*Integrated Lights-Out User Guide* located on the HP website (http://www.hp.com/servers/lights-out)

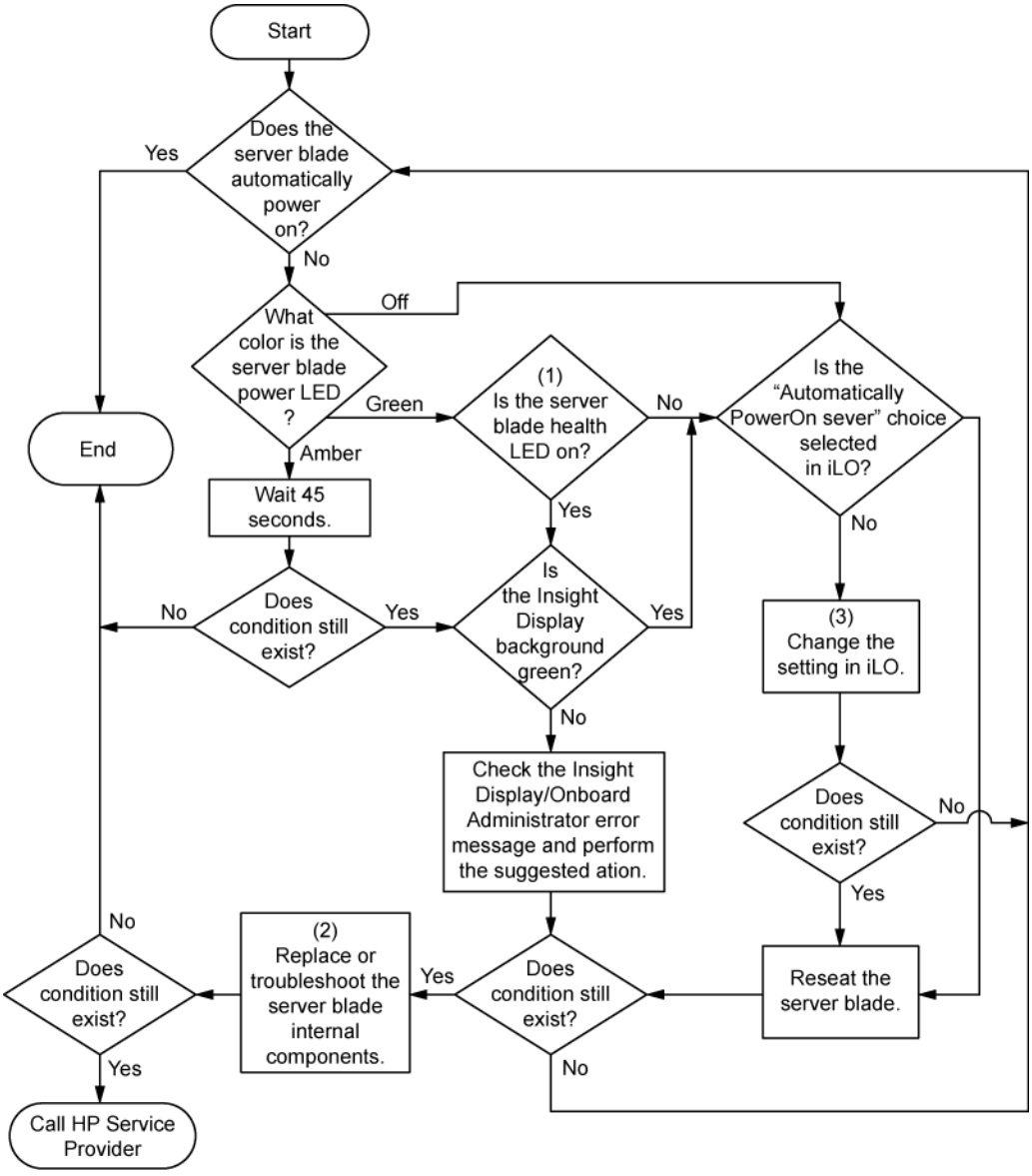

POST problems flowchart

Symptoms:

- Server does not complete POST

  NOTE: The server has completed POST when the system attempts to access the boot device.

- Server completes POST with errors

Possible problems:

- Improperly seated or faulty internal component
- Faulty KVM device
- Faulty video device

Item	Refer to
1	Server blade power-on problems flowchart (on page 62)
2	"POST error messages and beep codes (on page 70)"
3	"Video problems" in the *HP ProLiant Servers Troubleshooting Guide* located on the Documentation CD or on the HP website (http://www.hp.com/support)
4	"Symptom information (on page 57)"
5	"General memory problems are occurring" in the *HP ProLiant Servers Troubleshooting Guide* located on the Documentation CD or on the HP website (http://www.hp.com/support)
6	• "Hardware problems" in the *HP ProLiant Servers Troubleshooting Guide* located on the Documentation CD or on the HP website (http://www.hp.com/support) • Maintenance and service guides for c-Class server blades, located on the Documentation CD or the HP website (http://www.hp.com/go/bladesystem/documentation)
7	• "Server information you need" in the *HP ProLiant Servers Troubleshooting Guide* located on the Documentation CD or on the HP website (http://www.hp.com/support) • "Operating system information you need" in the *HP ProLiant Servers Troubleshooting Guide* located on the Documentation CD or on the HP website (http://www.hp.com/support)

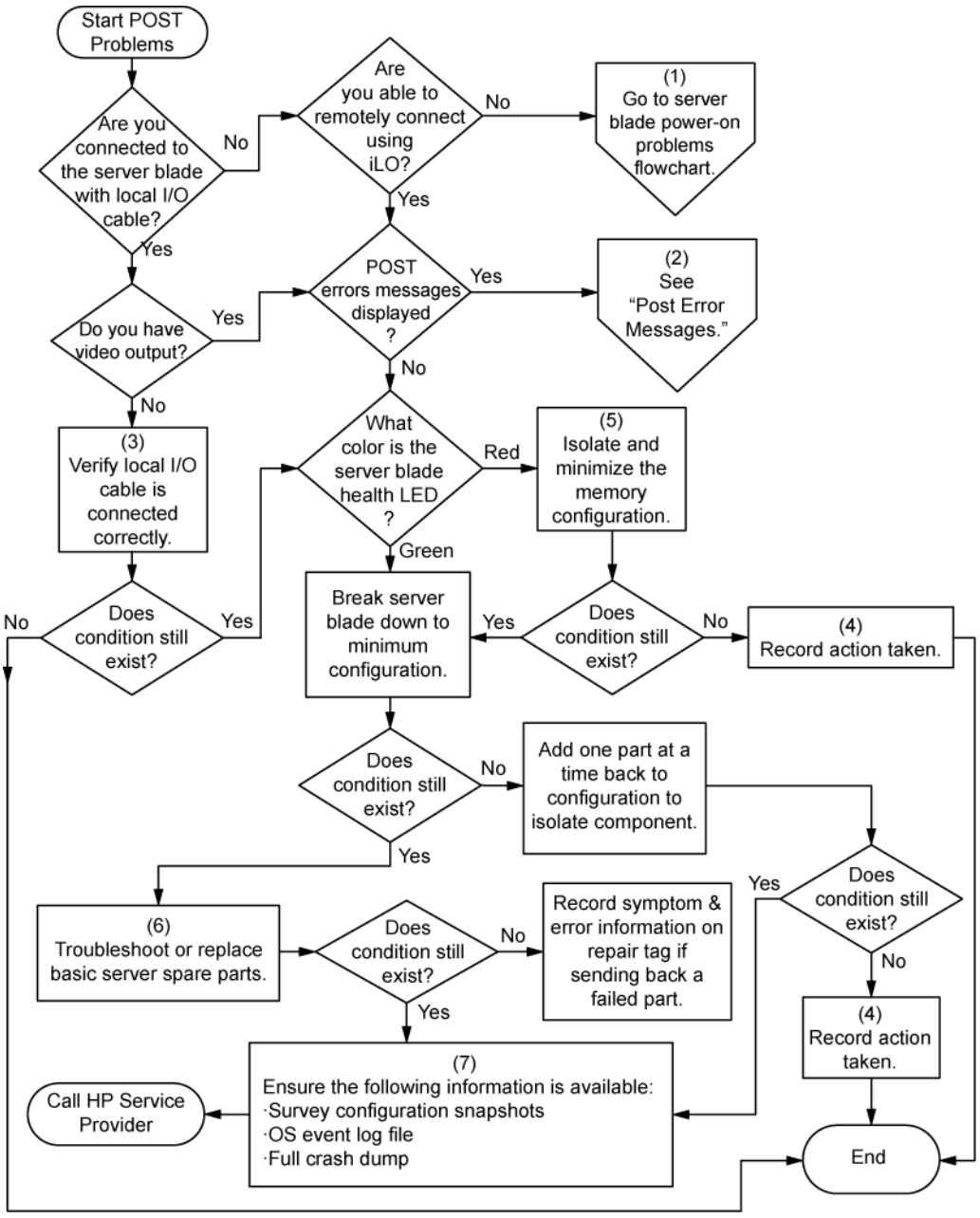

OS boot problems flowchart

There are two ways to use SmartStart when diagnosing OS boot problems on a server blade:

- Use iLO to remotely attach virtual devices to mount the SmartStart CD onto the server blade.
- Use a local I/O cable and drive to connect to the server blade, and then restart the server blade.

Symptoms:

- Server does not boot a previously installed OS
- Server does not boot SmartStart

Possible causes:

- Corrupted OS
- Hard drive subsystem problem
- Incorrect boot order setting in RBSU

Item	See
1	*HP ROM-Based Setup Utility User Guide* (http://www.hp.com/servers/smartstart)
2	"POST problems flowchart (on page 64)"
3	• "Hard drive problems" in the *HP ProLiant Servers Troubleshooting Guide* located on the Documentation CD or on the HP website (http://www.hp.com/support) • Controller documentation
4	"HP Insight Diagnostics (on page 51)" or in the *HP ProLiant Servers Troubleshooting Guide* located on the Documentation CD or on the HP website (http://www.hp.com/support)
5	• "Loose connections (on page 58)" • "CD-ROM and DVD drive problems" in the *HP ProLiant Servers Troubleshooting Guide* located on the Documentation CD or on the HP website (http://www.hp.com/support) • Controller documentation
6	"General memory problems are occurring" in the *HP ProLiant Servers Troubleshooting Guide* located on the Documentation CD or on the HP website (http://www.hp.com/support)
7	• "Operating system problems" in the *HP ProLiant Servers Troubleshooting Guide* located on the Documentation CD or on the HP website (http://www.hp.com/support) • "HP contact information (on page 81)"
8	• "Hardware problems" in the *HP ProLiant Servers Troubleshooting Guide* located on the Documentation CD or on the HP website (http://www.hp.com/support) • Maintenance and service guides for p-Class server blades, located on the Documentation CD or the HP website (http://www.hp.com/products/servers/proliant-bl/p-class/info) • Maintenance and service guides for c-Class server blades, located on the Documentation CD or the HP website (http://www.hp.com/go/bladesystem/documentation)
9	"General diagnosis flowchart (on page 60)"

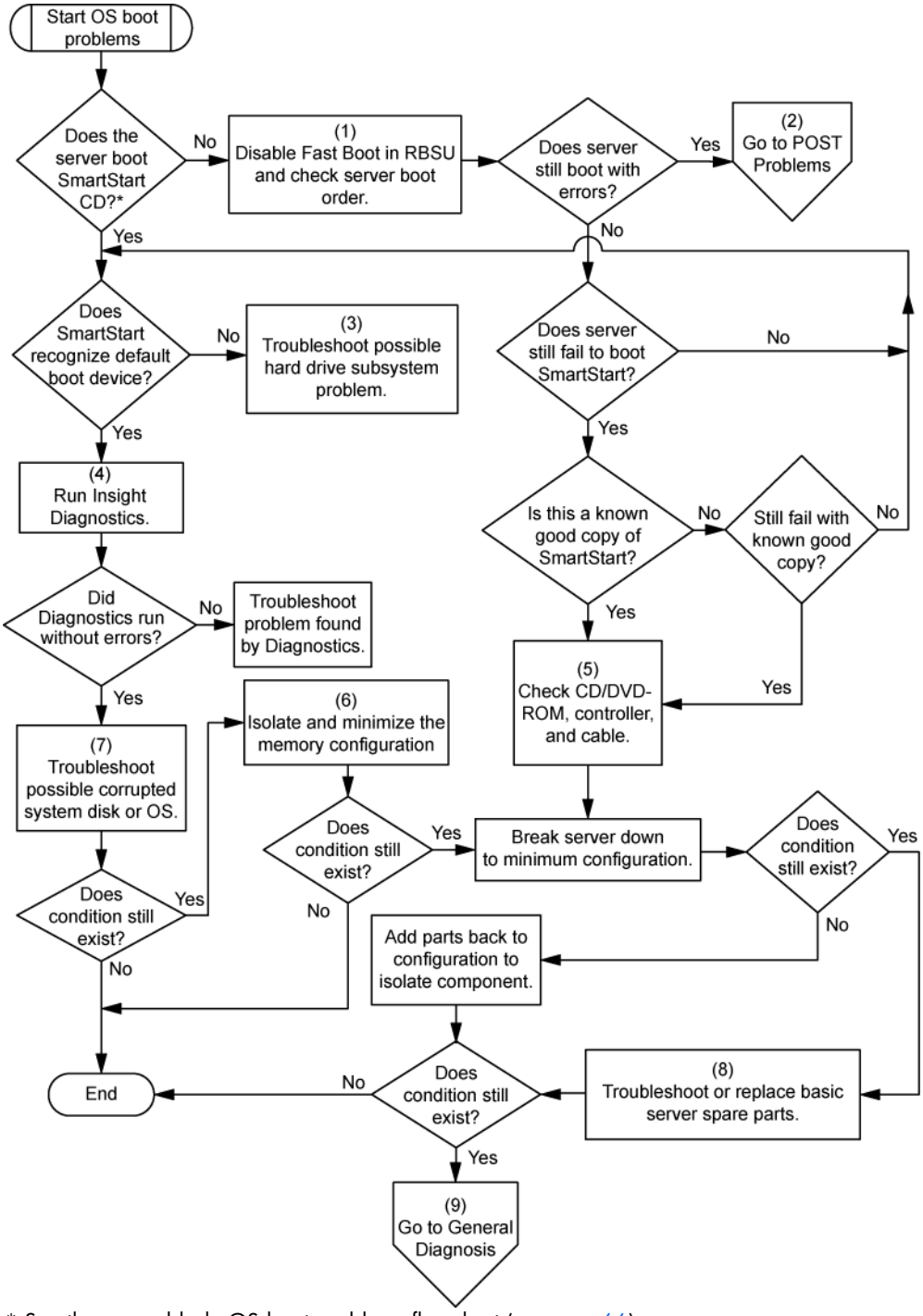

* See the server blade OS boot problems flowchart (on page 66)

Server fault indications flowchart

Symptoms:

- Server boots, but a fault event is reported by Insight Management Agents (on page 48)
- Server boots, but the internal health LED, external health LED, or component health LED is red or amber

NOTE: For the location of server LEDs and information on their statuses, refer to the server documentation.

Possible causes:

- Improperly seated or faulty internal or external component
- Unsupported component installed
- Redundancy failure
- System overtemperature condition

Item	See
1	"Management agents (on page 48)" or in the *HP ProLiant Servers Troubleshooting Guide* located on the Documentation CD or on the HP website (http://www.hp.com/support)
2	• "Integrated Management Log (on page 52)" or in the *HP ProLiant Servers Troubleshooting Guide* located on the Documentation CD or on the HP website (http://www.hp.com/support) • "Event list error messages" in the *HP ProLiant Servers Troubleshooting Guide* located on the Documentation CD or on the HP website (http://www.hp.com/support)
3	"Component identification (on page 6, "System board components" on page 9)"
4	System Management Homepage (https://localhost:2381)
5	"Power-on problems flowchart ("Server blade power-on problems flowchart" on page 62)"
6	• "Hardware problems" in the *HP ProLiant Servers Troubleshooting Guide* located on the Documentation CD or on the HP website (http://www.hp.com/support) • Maintenance and service guides for c-Class server blades, located on the Documentation CD or the HP website (http://www.hp.com/go/bladesystem/documentation) • "HP contact information (on page 81)"
7	• "Hardware problems" in the *HP ProLiant Servers Troubleshooting Guide* located on the Documentation CD or on the HP website (http://www.hp.com/support) • Maintenance and service guides for c-Class server blades, located on the Documentation CD or the HP website (http://www.hp.com/go/bladesystem/documentation)

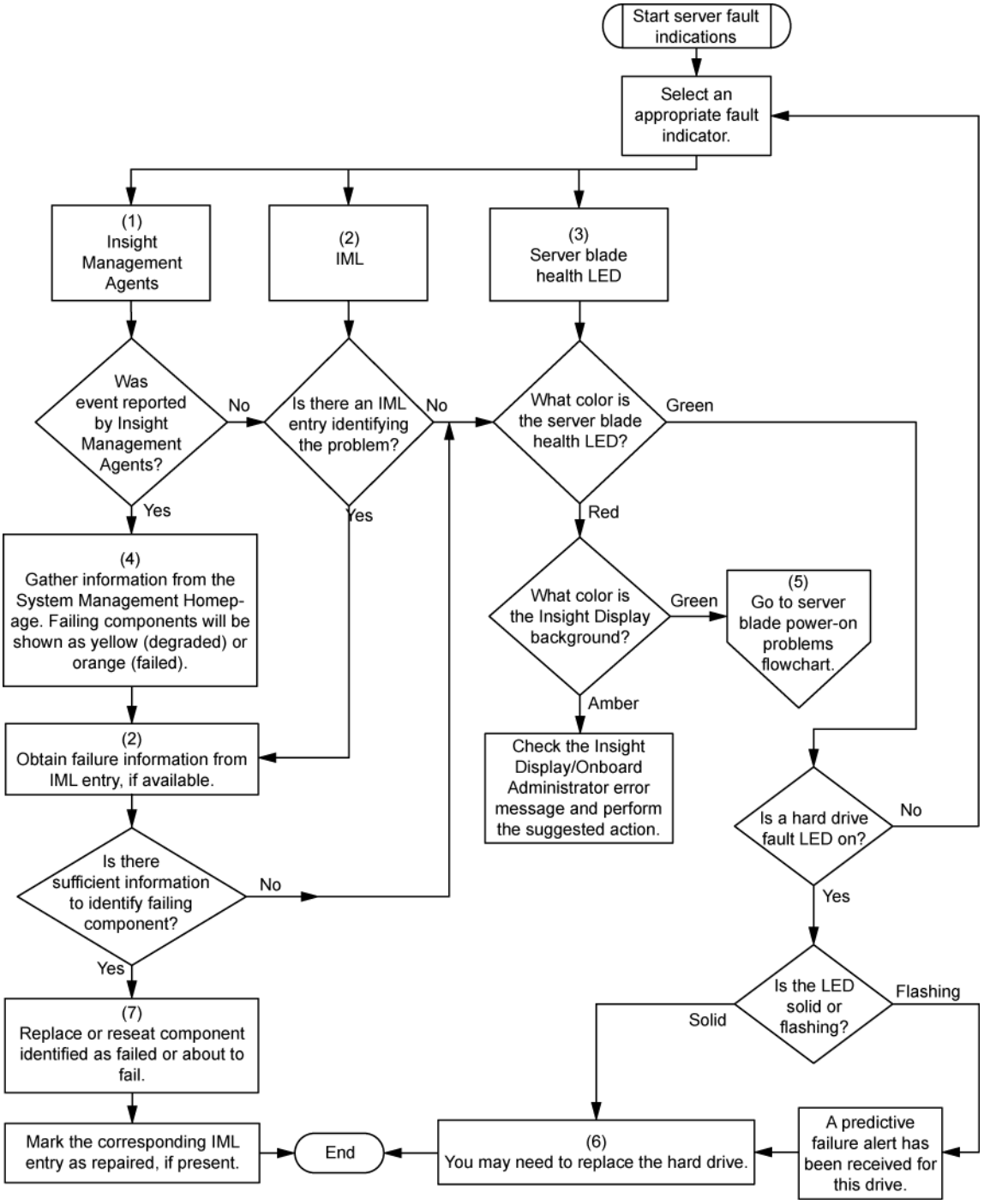

POST error messages and beep codes

Introduction to POST error messages

The error messages and codes in this section include all new messages generated by this server blade. Some messages are informational and do not indicate an error. A server blade generates only the codes that are applicable to its configuration and options.

For a complete listing of error messages, refer to the "POST error messages" in the *HP ProLiant Servers Troubleshooting Guide* located on the Documentation CD or on the HP website (http://www.hp.com/support).

⚠ **WARNING:** To avoid potential problems, ALWAYS read the warnings and cautionary information in the server documentation before removing, replacing, reseating, or modifying system components.

Processor X Unsupported Wattage.

Audible beeps: 1 long, 1 short

Possible cause: Processor not supported by current server blade.

Action: Refer to the server blade documentation for supported processors. If the processor is supported, remove the processor, update the system to latest ROM, and then reinstall the processor.

Battery replacement

If the server blade no longer automatically displays the correct date and time, you may need to replace the battery that provides power to the real-time clock. Under normal use, battery life is 5 to 10 years.

WARNING: The computer contains an internal lithium manganese dioxide, a vanadium pentoxide, or an alkaline battery pack. A risk of fire and burns exists if the battery pack is not properly handled. To reduce the risk of personal injury:

- Do not attempt to recharge the battery.
- Do not expose the battery to temperatures higher than 60°C (140°F).
- Do not disassemble, crush, puncture, short external contacts, or dispose of in fire or water.
- Replace only with the spare designated for this product.

To remove the component:

1. Power down the server blade (on page 12).
2. Remove the server blade (on page 13).
3. Remove the access panel (on page 14).
4. Identify the battery location ("System board components" on page 9).
5. Remove the battery.

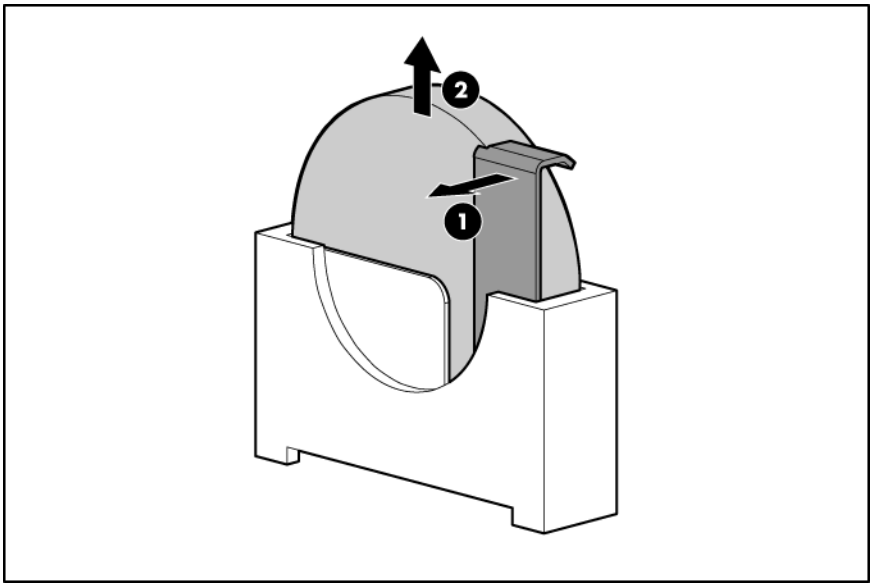

IMPORTANT: Replacing the system board battery resets the system ROM to its default configuration. After replacing the battery, reconfigure the system through RBSU.

To replace the component, reverse the removal procedure.

For more information about battery replacement or proper disposal, contact an authorized reseller or an authorized service provider.

Regulatory compliance notices

Regulatory compliance identification numbers

For the purpose of regulatory compliance certifications and identification, this product has been assigned a unique regulatory model number. The regulatory model number can be found on the product nameplate label, along with all required approval markings and information. When requesting compliance information for this product, always refer to this regulatory model number. The regulatory model number is not the marketing name or model number of the product.

Federal Communications Commission notice

Part 15 of the Federal Communications Commission (FCC) Rules and Regulations has established Radio Frequency (RF) emission limits to provide an interference-free radio frequency spectrum. Many electronic devices, including computers, generate RF energy incidental to their intended function and are, therefore, covered by these rules. These rules place computers and related peripheral devices into two classes, A and B, depending upon their intended installation. Class A devices are those that may reasonably be expected to be installed in a business or commercial environment. Class B devices are those that may reasonably be expected to be installed in a residential environment (for example, personal computers). The FCC requires devices in both classes to bear a label indicating the interference potential of the device as well as additional operating instructions for the user.

FCC rating label

The FCC rating label on the device shows the classification (A or B) of the equipment. Class B devices have an FCC logo or ID on the label. Class A devices do not have an FCC logo or ID on the label. After you determine the class of the device, refer to the corresponding statement.

Class A equipment

This equipment has been tested and found to comply with the limits for a Class A digital device, pursuant to Part 15 of the FCC Rules. These limits are designed to provide reasonable protection against harmful interference when the equipment is operated in a commercial environment. This equipment generates, uses, and can radiate radio frequency energy and, if not installed and used in accordance with the instructions, may cause harmful interference to radio communications. Operation of this equipment in a residential area is likely to cause harmful interference, in which case the user will be required to correct the interference at personal expense.

Class B equipment

This equipment has been tested and found to comply with the limits for a Class B digital device, pursuant to Part 15 of the FCC Rules. These limits are designed to provide reasonable protection against harmful interference in a residential installation. This equipment generates, uses, and can radiate radio frequency

energy and, if not installed and used in accordance with the instructions, may cause harmful interference to radio communications. However, there is no guarantee that interference will not occur in a particular installation. If this equipment does cause harmful interference to radio or television reception, which can be determined by turning the equipment off and on, the user is encouraged to try to correct the interference by one or more of the following measures:

- Reorient or relocate the receiving antenna.
- Increase the separation between the equipment and receiver.
- Connect the equipment into an outlet on a circuit that is different from that to which the receiver is connected.
- Consult the dealer or an experienced radio or television technician for help.

Declaration of conformity for products marked with the FCC logo, United States only

This device complies with Part 15 of the FCC Rules. Operation is subject to the following two conditions: (1) this device may not cause harmful interference, and (2) this device must accept any interference received, including interference that may cause undesired operation.

For questions regarding this product, contact us by mail or telephone:

- Hewlett-Packard Company
  P. O. Box 692000, Mail Stop 530113
  Houston, Texas 77269-2000
- 1-800-HP-INVENT (1-800-474-6836). (For continuous quality improvement, calls may be recorded or monitored.)

For questions regarding this FCC declaration, contact us by mail or telephone:

- Hewlett-Packard Company
  P. O. Box 692000, Mail Stop 510101
  Houston, Texas 77269-2000
- 1-281-514-3333

To identify this product, refer to the part, series, or model number found on the product.

Modifications

The FCC requires the user to be notified that any changes or modifications made to this device that are not expressly approved by Hewlett-Packard Company may void the user's authority to operate the equipment.

Cables

Connections to this device must be made with shielded cables with metallic RFI/EMI connector hoods in order to maintain compliance with FCC Rules and Regulations.

Canadian notice (Avis Canadien)

Class A equipment

This Class A digital apparatus meets all requirements of the Canadian Interference-Causing Equipment Regulations.

Cet appareil numérique de la classe A respecte toutes les exigences du Règlement sur le matériel brouilleur du Canada.

Class B equipment

This Class B digital apparatus meets all requirements of the Canadian Interference-Causing Equipment Regulations.

Cet appareil numérique de la classe B respecte toutes les exigences du Règlement sur le matériel brouilleur du Canada.

European Union regulatory notice

This product complies with the following EU Directives:

- Low Voltage Directive 2006/95/EC
- EMC Directive 2004/108/EC

Compliance with these directives implies conformity to applicable harmonized European standards (European Norms) which are listed on the EU Declaration of Conformity issued by Hewlett-Packard for this product or product family.

This compliance is indicated by the following conformity marking placed on the product:



This marking is valid for non-Telecom products and EU harmonized Telecom products (e.g. Bluetooth).



This marking is valid for EU non-harmonized Telecom products.

*Notified body number (used only if applicable—refer to the product label)

Hewlett-Packard GmbH, HQ-TRE, Herrenberger Strasse 140, 71034 Boeblingen, Germany

Disposal of waste equipment by users in private households in the European Union



This symbol on the product or on its packaging indicates that this product must not be disposed of with your other household waste. Instead, it is your responsibility to dispose of your waste equipment by handing it over to a designated collection point for the recycling of waste electrical and electronic equipment. The separate collection and recycling of your waste equipment at the time of disposal will help to conserve natural resources and ensure that it is recycled in a manner that protects human health and the environment. For more information about where you can drop off your waste equipment for recycling, please contact your local city office, your household waste disposal service or the shop where you purchased the product.

Japanese notice

ご使用になっている装置にVCCIマークが付いていましたら、次の説明文をお読み下さい。

この装置は、情報処理装置等電波障害自主規制協議会（VCCI）の基準に基づくクラスB情報技術装置です。この装置は、家庭環境で使用することを目的としていますが、この装置がラジオやテレビジョン受信機に近接して使用されると、受信障害を引き起こすことがあります。
取扱説明書に従って正しい取り扱いをして下さい。

VCCIマークが付いていない場合には、次の点にご注意下さい。

この装置は、情報処理装置等電波障害自主規制協議会（VCCI）の基準に基づくクラスA情報技術装置です　この装置を家庭環境で使用すると電波妨害を引き起こすことがあります。この場合には使用者が適切な対策を講ずるよう要求されることがあります。

BSMI notice

警告使用者:

這是甲類的資訊產品，在居住的環境中使用時，可能會造成射頻干擾，在這種情況下，使用者會被要求採取某些適當的對策。

Korean notice

Class A equipment

A급 기기 (업무용 방송통신기기)	이 기기는 업무용(A급)으로 전자파적합등록을 한 기기이오니 판매자 또는 사용자는 이 점을 주의하시기 바라며, 가정 외의 지역에서 사용하는 것을 목적으로 합니다.

Class B equipment

B급 기기 (가정용 방송통신기기)	이 기기는 가정용(B급)으로 전자파적합등록을 한 기기로서 주로 가정에서 사용하는 것을 목적으로 하며, 모든 지역에서 사용할 수 있습니다.

Chinese notice

Class A equipment

声明
此为 A 级产品，在生活环境中，该产品可能会造成无线电干扰。在这种情况下，可能需要用户对其干扰采取可行的措施。

Laser compliance

This product may be provided with an optical storage device (that is, CD or DVD drive) and/or fiber optic transceiver. Each of these devices contains a laser that is classified as a Class 1 Laser Product in accordance with US FDA regulations and the IEC 60825-1. The product does not emit hazardous laser radiation.

Each laser product complies with 21 CFR 1040.10 and 1040.11 except for deviations pursuant to Laser Notice No. 50, dated May 27, 2001; and with IEC 60825-1:1993/A2:2001.

⚠ **WARNING:** Use of controls or adjustments or performance of procedures other than those specified herein or in the laser product's installation guide may result in hazardous radiation exposure. To reduce the risk of exposure to hazardous radiation:

- Do not try to open the module enclosure. There are no user-serviceable components inside.
- Do not operate controls, make adjustments, or perform procedures to the laser device other than those specified herein.
- Allow only HP Authorized Service technicians to repair the unit.

The Center for Devices and Radiological Health (CDRH) of the U.S. Food and Drug Administration implemented regulations for laser products on August 2, 1976. These regulations apply to laser products manufactured from August 1, 1976. Compliance is mandatory for products marketed in the United States.

Battery replacement notice

⚠ **WARNING:** The computer contains an internal lithium manganese dioxide, a vanadium pentoxide, or an alkaline battery pack. A risk of fire and burns exists if the battery pack is not properly handled. To reduce the risk of personal injury:

- Do not attempt to recharge the battery.
- Do not expose the battery to temperatures higher than 60°C (140°F).
- Do not disassemble, crush, puncture, short external contacts, or dispose of in fire or water.



Batteries, battery packs, and accumulators should not be disposed of together with the general household waste. To forward them to recycling or proper disposal, use the public collection system or return them to HP, an authorized HP Partner, or their agents.

For more information about battery replacement or proper disposal, contact an authorized reseller or an authorized service provider.

Taiwan battery recycling notice

The Taiwan EPA requires dry battery manufacturing or importing firms in accordance with Article 15 of the Waste Disposal Act to indicate the recovery marks on the batteries used in sales, giveaway or promotion. Contact a qualified Taiwanese recycler for proper battery disposal.



Electrostatic discharge

Preventing electrostatic discharge

To prevent damaging the system, be aware of the precautions you need to follow when setting up the system or handling parts. A discharge of static electricity from a finger or other conductor may damage system boards or other static-sensitive devices. This type of damage may reduce the life expectancy of the device.

To prevent electrostatic damage:

- Avoid hand contact by transporting and storing products in static-safe containers.
- Keep electrostatic-sensitive parts in their containers until they arrive at static-free workstations.
- Place parts on a grounded surface before removing them from their containers.
- Avoid touching pins, leads, or circuitry.
- Always be properly grounded when touching a static-sensitive component or assembly.

Grounding methods to prevent electrostatic discharge

Several methods are used for grounding. Use one or more of the following methods when handling or installing electrostatic-sensitive parts:

- Use a wrist strap connected by a ground cord to a grounded workstation or computer chassis. Wrist straps are flexible straps with a minimum of 1 megohm ±10 percent resistance in the ground cords. To provide proper ground, wear the strap snug against the skin.
- Use heel straps, toe straps, or boot straps at standing workstations. Wear the straps on both feet when standing on conductive floors or dissipating floor mats.
- Use conductive field service tools.
- Use a portable field service kit with a folding static-dissipating work mat.

If you do not have any of the suggested equipment for proper grounding, have an authorized reseller install the part.

For more information on static electricity or assistance with product installation, contact an authorized reseller.

Specifications

Environmental specifications

Specification	Value
Temperature range*	
Operating	10°C to 35°C (50°F to 95°F)
Shipping	-40°C to 60°C (-40°F to 140°F)
Storage	-20°C to 60°C (-4°F to 140°F)
Maximum wet bulb temperature	30°C (86°F)
Relative humidity (noncondensing)**	
Operating	10% to 90%
Shipping	10% to 90%
Storage	10% to 95%

* All temperature ratings shown are for sea level. An altitude derating of 1°C per 304.8 m (1.8°F per 1,000 ft) to 3048 m (10,000 ft) is applicable. No direct sunlight allowed. Upper operating limit is 3,048m (10,000 ft) or 70 kPa (10.1 psia). Upper non-operating limit is 9,144 m (30,000 ft) or 30.3 kPa (4.4 psia).
** Storage maximum humidity of 95% is based on a maximum temperature of 45°C (113°F). Altitude maximum for storage corresponds to a pressure minimum of 70 kPa.

Server blade specifications

Specification	Value
Height	5.56 cm (2.19 in)
Depth	50.95 cm (20.06 in)
Width	18.16 cm (7.15 in)
Weight (maximum)	5.9 kg (13.00 lb)
Weight (no drives installed)	5.33 kg (11.75 lb)

Technical support

Before you contact HP

Be sure to have the following information available before you call HP:

- Technical support registration number (if applicable)
- Product serial number
- Product model name and number
- Product identification number
- Applicable error messages
- Add-on boards or hardware
- Third-party hardware or software
- Operating system type and revision level

HP contact information

For the name of the nearest HP authorized reseller:

- See the Contact HP worldwide (in English) webpage (http://welcome.hp.com/country/us/en/wwcontact.html).

For HP technical support:

- In the United States, for contact options see the Contact HP United States webpage (http://welcome.hp.com/country/us/en/contact_us.html). To contact HP by phone:
  - Call 1-800-HP-INVENT (1-800-474-6836). This service is available 24 hours a day, 7 days a week. For continuous quality improvement, calls may be recorded or monitored.
  - If you have purchased a Care Pack (service upgrade), call 1-800-633-3600. For more information about Care Packs, refer to the HP website (http://www.hp.com/hps).
- In other locations, see the Contact HP worldwide (in English) webpage (http://welcome.hp.com/country/us/en/wwcontact.html).

Customer Self Repair

HP products are designed with many Customer Self Repair (CSR) parts to minimize repair time and allow for greater flexibility in performing defective parts replacement. If during the diagnosis period HP (or HP service providers or service partners) identifies that the repair can be accomplished by the use of a CSR part, HP will ship that part directly to you for replacement. There are two categories of CSR parts:

- **Mandatory**—Parts for which customer self repair is mandatory. If you request HP to replace these parts, you will be charged for the travel and labor costs of this service.

- **Optional**—Parts for which customer self repair is optional. These parts are also designed for customer self repair. If, however, you require that HP replace them for you, there may or may not be additional charges, depending on the type of warranty service designated for your product.

NOTE: Some HP parts are not designed for customer self repair. In order to satisfy the customer warranty, HP requires that an authorized service provider replace the part. These parts are identified as "No" in the Illustrated Parts Catalog.

Based on availability and where geography permits, CSR parts will be shipped for next business day delivery. Same day or four-hour delivery may be offered at an additional charge where geography permits. If assistance is required, you can call the HP Technical Support Center and a technician will help you over the telephone. HP specifies in the materials shipped with a replacement CSR part whether a defective part must be returned to HP. In cases where it is required to return the defective part to HP, you must ship the defective part back to HP within a defined period of time, normally five (5) business days. The defective part must be returned with the associated documentation in the provided shipping material. Failure to return the defective part may result in HP billing you for the replacement. With a customer self repair, HP will pay all shipping and part return costs and determine the courier/carrier to be used.

For more information about HP's Customer Self Repair program, contact your local service provider. For the North American program, refer to the HP website (http://www.hp.com/go/selfrepair).

Réparation par le client (CSR)

Les produits HP comportent de nombreuses pièces CSR (Customer Self Repair = réparation par le client) afin de minimiser les délais de réparation et faciliter le remplacement des pièces défectueuses. Si pendant la période de diagnostic, HP (ou ses partenaires ou mainteneurs agréés) détermine que la réparation peut être effectuée à l'aide d'une pièce CSR, HP vous l'envoie directement. Il existe deux catégories de pièces CSR:

- **Obligatoire** - Pièces pour lesquelles la réparation par le client est obligatoire. Si vous demandez à HP de remplacer ces pièces, les coûts de déplacement et main d'œuvre du service vous seront facturés.
- **Facultatif** - Pièces pour lesquelles la réparation par le client est facultative. Ces pièces sont également conçues pour permettre au client d'effectuer lui-même la réparation. Toutefois, si vous demandez à HP de remplacer ces pièces, l'intervention peut ou non vous être facturée, selon le type de garantie applicable à votre produit.

REMARQUE: Certaines pièces HP ne sont pas conçues pour permettre au client d'effectuer lui-même la réparation. Pour que la garantie puisse s'appliquer, HP exige que le remplacement de la pièce soit effectué par un Mainteneur Agréé. Ces pièces sont identifiées par la mention "Non" dans le Catalogue illustré.

Les pièces CSR sont livrées le jour ouvré suivant, dans la limite des stocks disponibles et selon votre situation géographique. Si votre situation géographique le permet et que vous demandez une livraison le jour même ou dans les 4 heures, celle-ci vous sera facturée. Pour bénéficier d'une assistance téléphonique, appelez le Centre d'assistance technique HP. Dans les documents envoyés avec la pièce de rechange CSR, HP précise s'il est nécessaire de lui retourner la pièce défectueuse. Si c'est le cas, vous devez le faire dans le délai indiqué, généralement cinq (5) jours ouvrés. La pièce et sa documentation doivent être retournées dans l'emballage fourni. Si vous ne retournez pas la pièce défectueuse, HP se réserve le droit de vous facturer les coûts de remplacement. Dans le cas d'une pièce CSR, HP supporte l'ensemble des frais d'expédition et de retour, et détermine la société de courses ou le transporteur à utiliser.

Pour plus d'informations sur le programme CSR de HP, contactez votre Mainteneur Agrée local. Pour plus d'informations sur ce programme en Amérique du Nord, consultez le site Web HP (http://www.hp.com/go/selfrepair).

Riparazione da parte del cliente

Per abbreviare i tempi di riparazione e garantire una maggiore flessibilità nella sostituzione di parti difettose, i prodotti HP sono realizzati con numerosi componenti che possono essere riparati direttamente dal cliente (CSR, Customer Self Repair). Se in fase di diagnostica HP (o un centro di servizi o di assistenza HP) identifica il guasto come riparabile mediante un ricambio CSR, HP lo spedirà direttamente al cliente per la sostituzione. Vi sono due categorie di parti CSR:

- **Obbligatorie** – Parti che devono essere necessariamente riparate dal cliente. Se il cliente ne affida la riparazione ad HP, deve sostenere le spese di spedizione e di manodopera per il servizio.
- **Opzionali** – Parti la cui riparazione da parte del cliente è facoltativa. Si tratta comunque di componenti progettati per questo scopo. Se tuttavia il cliente ne richiede la sostituzione ad HP, potrebbe dover sostenere spese addizionali a seconda del tipo di garanzia previsto per il prodotto.

NOTA: alcuni componenti HP non sono progettati per la riparazione da parte del cliente. Per rispettare la garanzia, HP richiede che queste parti siano sostituite da un centro di assistenza autorizzato. Tali parti sono identificate da un "No" nel Catalogo illustrato dei componenti.

In base alla disponibilità e alla località geografica, le parti CSR vengono spedite con consegna entro il giorno lavorativo seguente. La consegna nel giorno stesso o entro quattro ore è offerta con un supplemento di costo solo in alcune zone. In caso di necessità si può richiedere l'assistenza telefonica di un addetto del centro di supporto tecnico HP. Nel materiale fornito con una parte di ricambio CSR, HP specifica se il cliente deve restituire dei componenti. Qualora sia richiesta la resa ad HP del componente difettoso, lo si deve spedire ad HP entro un determinato periodo di tempo, generalmente cinque (5) giorni lavorativi. Il componente difettoso deve essere restituito con la documentazione associata nell'imballo di spedizione fornito. La mancata restituzione del componente può comportare la fatturazione del ricambio da parte di HP. Nel caso di riparazione da parte del cliente, HP sostiene tutte le spese di spedizione e resa e sceglie il corriere/vettore da utilizzare.

Per ulteriori informazioni sul programma CSR di HP contattare il centro di assistenza di zona. Per il programma in Nord America fare riferimento al sito Web **HP** (http://www.hp.com/go/selfrepair).

Customer Self Repair

HP Produkte enthalten viele CSR-Teile (Customer Self Repair), um Reparaturzeiten zu minimieren und höhere Flexibilität beim Austausch defekter Bauteile zu ermöglichen. Wenn HP (oder ein HP Servicepartner) bei der Diagnose feststellt, dass das Produkt mithilfe eines CSR-Teils repariert werden kann, sendet Ihnen HP dieses Bauteil zum Austausch direkt zu. CSR-Teile werden in zwei Kategorien unterteilt:

- **Zwingend** – Teile, für die das Customer Self Repair-Verfahren zwingend vorgegeben ist. Wenn Sie den Austausch dieser Teile von HP vornehmen lassen, werden Ihnen die Anfahrt- und Arbeitskosten für diesen Service berechnet.
- **Optional** – Teile, für die das Customer Self Repair-Verfahren optional ist. Diese Teile sind auch für Customer Self Repair ausgelegt. Wenn Sie jedoch den Austausch dieser Teile von HP vornehmen lassen möchten, können bei diesem Service je nach den für Ihr Produkt vorgesehenen Garantiebedingungen zusätzliche Kosten anfallen.

HINWEIS: Einige Teile sind nicht für Customer Self Repair ausgelegt. Um den Garantieanspruch des Kunden zu erfüllen, muss das Teil von einem HP Servicepartner ersetzt werden. Im illustrierten Teilekatalog sind diese Teile mit „No“ bzw. „Nein“ gekennzeichnet.

CSR-Teile werden abhängig von der Verfügbarkeit und vom Lieferziel am folgenden Geschäftstag geliefert. Für bestimmte Standorte ist eine Lieferung am selben Tag oder innerhalb von vier Stunden gegen einen Aufpreis verfügbar. Wenn Sie Hilfe benötigen, können Sie das HP technische Support Center anrufen und sich von einem Mitarbeiter per Telefon helfen lassen. Den Materialien, die mit einem CSR-Ersatzteil geliefert werden, können Sie entnehmen, ob das defekte Teil an HP zurückgeschickt werden muss. Wenn es erforderlich ist, das defekte Teil an HP zurückzuschicken, müssen Sie dies innerhalb eines vorgegebenen Zeitraums tun, in der Regel innerhalb von fünf (5) Geschäftstagen. Das defekte Teil muss mit der zugehörigen Dokumentation in der Verpackung zurückgeschickt werden, die im Lieferumfang enthalten ist. Wenn Sie das defekte Teil nicht zurückschicken, kann HP Ihnen das Ersatzteil in Rechnung stellen. Im Falle von Customer Self Repair kommt HP für alle Kosten für die Lieferung und Rücksendung auf und bestimmt den Kurier-/Frachtdienst.

Weitere Informationen über das HP Customer Self Repair Programm erhalten Sie von Ihrem Servicepartner vor Ort. Informationen über das CSR-Programm in Nordamerika finden Sie auf der HP Website unter (http://www.hp.com/go/selfrepair).

Reparaciones del propio cliente

Los productos de HP incluyen muchos componentes que el propio usuario puede reemplazar (*Customer Self Repair*, CSR) para minimizar el tiempo de reparación y ofrecer una mayor flexibilidad a la hora de realizar sustituciones de componentes defectuosos. Si, durante la fase de diagnóstico, HP (o los proveedores o socios de servicio de HP) identifica que una reparación puede llevarse a cabo mediante el uso de un componente CSR, HP le enviará dicho componente directamente para que realice su sustitución. Los componentes CSR se clasifican en dos categorías:

- **Obligatorio:** componentes para los que la reparación por parte del usuario es obligatoria. Si solicita a HP que realice la sustitución de estos componentes, tendrá que hacerse cargo de los gastos de desplazamiento y de mano de obra de dicho servicio.
- **Opcional:** componentes para los que la reparación por parte del usuario es opcional. Estos componentes también están diseñados para que puedan ser reparados por el usuario. Sin embargo, si precisa que HP realice su sustitución, puede o no conllevar costes adicionales, dependiendo del tipo de servicio de garantía correspondiente al producto.

NOTA: Algunos componentes no están diseñados para que puedan ser reparados por el usuario. Para que el usuario haga valer su garantía, HP pone como condición que un proveedor de servicios autorizado realice la sustitución de estos componentes. Dichos componentes se identifican con la palabra "No" en el catálogo ilustrado de componentes.

Según la disponibilidad y la situación geográfica, los componentes CSR se enviarán para que lleguen a su destino al siguiente día laborable. Si la situación geográfica lo permite, se puede solicitar la entrega en el mismo día o en cuatro horas con un coste adicional. Si precisa asistencia técnica, puede llamar al Centro de asistencia técnica de HP y recibirá ayuda telefónica por parte de un técnico. Con el envío de materiales para la sustitución de componentes CSR, HP especificará si los componentes defectuosos deberán devolverse a HP. En aquellos casos en los que sea necesario devolver algún componente a HP, deberá hacerlo en el periodo de tiempo especificado, normalmente cinco días laborables. Los componentes defectuosos deberán devolverse con toda la documentación relacionada y con el embalaje de envío. Si no enviara el componente defectuoso requerido, HP podrá cobrarle por el de sustitución. En

el caso de todas sustituciones que lleve a cabo el cliente, HP se hará cargo de todos los gastos de envío y devolución de componentes y escogerá la empresa de transporte que se utilice para dicho servicio.

Para obtener más información acerca del programa de Reparaciones del propio cliente de HP, póngase en contacto con su proveedor de servicios local. Si está interesado en el programa para Norteamérica, visite la página web de HP siguiente (http://www.hp.com/go/selfrepair).

Customer Self Repair

Veel onderdelen in HP producten zijn door de klant zelf te repareren, waardoor de reparatieduur tot een minimum beperkt kan blijven en de flexibiliteit in het vervangen van defecte onderdelen groter is. Deze onderdelen worden CSR-onderdelen (Customer Self Repair) genoemd. Als HP (of een HP Service Partner) bij de diagnose vaststelt dat de reparatie kan worden uitgevoerd met een CSR-onderdeel, verzendt HP dat onderdeel rechtstreeks naar u, zodat u het defecte onderdeel daarmee kunt vervangen. Er zijn twee categorieën CSR-onderdelen:

- **Verplicht:** Onderdelen waarvoor reparatie door de klant verplicht is. Als u HP verzoekt deze onderdelen voor u te vervangen, worden u voor deze service reiskosten en arbeidsloon in rekening gebracht.
- **Optioneel:** Onderdelen waarvoor reparatie door de klant optioneel is. Ook deze onderdelen zijn ontworpen voor reparatie door de klant. Als u echter HP verzoekt deze onderdelen voor u te vervangen, kunnen daarvoor extra kosten in rekening worden gebracht, afhankelijk van het type garantieservice voor het product.

OPMERKING: Sommige HP onderdelen zijn niet ontwikkeld voor reparatie door de klant. In verband met de garantievoorwaarden moet het onderdeel door een geautoriseerde Service Partner worden vervangen. Deze onderdelen worden in de geïllustreerde onderdelencatalogus aangemerkt met "Nee".

Afhankelijk van de leverbaarheid en de locatie worden CSR-onderdelen verzonden voor levering op de eerstvolgende werkdag. Levering op dezelfde dag of binnen vier uur kan tegen meerkosten worden aangeboden, indien dit mogelijk is gezien de locatie. Indien assistentie gewenst is, belt u een HP Service Partner om via de telefoon technische ondersteuning te ontvangen. HP vermeldt in de documentatie bij het vervangende CSR-onderdeel of het defecte onderdeel aan HP moet worden geretourneerd. Als het defecte onderdeel aan HP moet worden teruggezonden, moet u het defecte onderdeel binnen een bepaalde periode, gewoonlijk vijf (5) werkdagen, retourneren aan HP. Het defecte onderdeel moet met de bijbehorende documentatie worden geretourneerd in het meegeleverde verpakkingsmateriaal. Als u het defecte onderdeel niet terugzendt, kan HP u voor het vervangende onderdeel kosten in rekening brengen. Bij reparatie door de klant betaalt HP alle verzendkosten voor het vervangende en geretourneerde onderdeel en kiest HP zelf welke koerier/transportonderneming hiervoor wordt gebruikt.

Neem contact op met een Service Partner voor meer informatie over het Customer Self Repair programma van HP. Informatie over Service Partners vindt u op de **HP website** (http://www.hp.com/go/selfrepair).

Reparo feito pelo cliente

Os produtos da HP são projetados com muitas peças para reparo feito pelo cliente (CSR) de modo a minimizar o tempo de reparo e permitir maior flexibilidade na substituição de peças com defeito. Se, durante o período de diagnóstico, a HP (ou fornecedores/parceiros de serviço da HP) concluir que o reparo pode ser efetuado pelo uso de uma peça CSR, a peça de reposição será enviada diretamente ao cliente. Existem duas categorias de peças CSR:

- **Obrigatória** – Peças cujo reparo feito pelo cliente é obrigatório. Se desejar que a HP substitua essas peças, serão cobradas as despesas de transporte e mão-de-obra do serviço.
- **Opcional** – Peças cujo reparo feito pelo cliente é opcional. Essas peças também são projetadas para o reparo feito pelo cliente. No entanto, se desejar que a HP as substitua, pode haver ou não a cobrança de taxa adicional, dependendo do tipo de serviço de garantia destinado ao produto.

OBSERVAÇÃO: Algumas peças da HP não são projetadas para o reparo feito pelo cliente. A fim de cumprir a garantia do cliente, a HP exige que um técnico autorizado substitua a peça. Essas peças estão identificadas com a marca "No" (Não), no catálogo de peças ilustrado.

Conforme a disponibilidade e o local geográfico, as peças CSR serão enviadas no primeiro dia útil após o pedido. Onde as condições geográficas permitirem, a entrega no mesmo dia ou em quatro horas pode ser feita mediante uma taxa adicional. Se precisar de auxílio, entre em contato com o Centro de suporte técnico da HP para que um técnico o ajude por telefone. A HP especifica nos materiais fornecidos com a peça CSR de reposição se a peça com defeito deve ser devolvida à HP. Nos casos em que isso for necessário, é preciso enviar a peça com defeito à HP dentro do período determinado, normalmente cinco (5) dias úteis. A peça com defeito deve ser enviada com a documentação correspondente no material de transporte fornecido. Caso não o faça, a HP poderá cobrar a reposição. Para as peças de reparo feito pelo cliente, a HP paga todas as despesas de transporte e de devolução da peça e determina a transportadora/serviço postal a ser utilizado.

Para obter mais informações sobre o programa de reparo feito pelo cliente da HP, entre em contato com o fornecedor de serviços local. Para o programa norte-americano, visite o site da HP (http://www.hp.com/go/selfrepair).

顧客自己修理保証サービス

修理時間を短縮し、故障部品の交換における高い柔軟性を確保するために、HP製品には多数の顧客自己修理（CSR）部品があります。診断の際に、CSR部品を使用すれば修理ができるとHP（HPまたはHP正規保守代理店）が判断した場合、HPはその部品を直接、お客様に発送し、お客様に交換していただきます。CSR部品には以下の2通りがあります。

- 必須 - 顧客自己修理が必須の部品。当該部品について、もしもお客様がHPに交換作業を依頼される場合には、その修理サービスに関する交通費および人件費がお客様に請求されます。
- 任意 - 顧客自己修理が任意である部品。この部品も顧客自己修理用です。当該部品について、もしもお客様がHPに交換作業を依頼される場合には、お買い上げの製品に適用される保証サービス内容の範囲内においては、別途費用を負担していただくことなく保証サービスを受けることができます。

注： HP製品の一部の部品は、顧客自己修理用ではありません。製品の保証を継続するためには、HPまたはHP正規保守代理店による交換作業が必須となります。部品カタログには、当該部品が顧客自己修理除外品である旨が記載されています。

部品供給が可能な場合、地域によっては、CSR部品を翌営業日に届くように発送します。また、地域によっては、追加費用を負担いただくことにより同日または4時間以内に届くように発送することも可能な場合があります。サポートが必要なときは、HPの修理受付窓口に電話していただければ、技術者が電話でアドバイスします。交換用のCSR部品または同梱物には、故障部品をHPに返送する必要があるかどうかが表示されています。故障部品をHPに返送する必要がある場合は、指定期限内（通常は5営業日以内）に故障部品をHPに返送してください。故障部品を返送する場合は、届いた時の梱包箱に関連書類とともに入れてください。故障部品を返送しない場合、HPから部品費用が請求されます。顧客自己修理の際には、HPは送料および部品返送費を全額負担し、使用する宅配便会社や運送会社を指定します。

客户自行维修

HP 产品提供许多客户自行维修 (CSR) 部件，以尽可能缩短维修时间和在更换缺陷部件方面提供更大的灵活性。如果在诊断期间 HP（或 HP 服务提供商或服务合作伙伴）确定可以通过使用 CSR 部件完成维修，HP 将直接把该部件发送给您进行更换。有两类 CSR 部件：

- **强制性的** — 要求客户必须自行维修的部件。如果您请求 HP 更换这些部件，则必须为该服务支付差旅费和人工费用。
- **可选的** — 客户可以选择是否自行维修的部件。这些部件也是为客户自行维修设计的。不过，如果您要求 HP 为您更换这些部件，则根据为您的产品指定的保修服务类型，HP 可能收取或不再收取任何附加费用。

注：某些 HP 部件的设计并未考虑客户自行维修。为了满足客户保修的需要，HP 要求授权服务提供商更换相关部件。这些部件在部件图解目录中标记为“否”。

CSR 部件将在下一个工作日发运（取决于备货情况和允许的地理范围）。在允许的地理范围内，可在当天或四小时内发运，但要收取额外费用。如果需要帮助，您可以致电 HP 技术支持中心，将会有技术人员通过电话为您提供帮助。HP 会在随更换的 CSR 部件发运的材料中指明是否必须将有缺陷的部件返还给 HP。如果要求您将有缺陷的部件返还给 HP，那么您必须在规定期限内（通常是五 (5) 个工作日）将缺陷部件发给 HP。有缺陷的部件必须随所提供的发运材料中的相关文件一起返还。如果未能送还有缺陷的部件，HP 可能会要求您支付更换费用。客户自行维修时，HP 将承担所有相关运输和部件返回费用，并指定快递商/承运商。

有关 HP 客户自行维修计划的详细信息，请与您当地的服务提供商联系。有关北美地区的计划，请访问 HP 网站 (http://www.hp.com/go/selfrepair)。

客戶自行維修

HP 產品設計了許多「客戶自行維修」(CSR) 的零件以減少維修時間，並且使得更換瑕疵零件時能有更大的彈性。如果在診斷期間 HP（或 HP 服務供應商或維修夥伴）辨認出此項維修工作可以藉由使用 CSR 零件來完成，則 HP 將直接寄送該零件給您作更換。CSR 零件分為兩種類別：

- **強制的** — 客戶自行維修所使用的零件是強制性的。如果您要求 HP 更換這些零件，HP 將會向您收取此服務所需的外出費用與勞動成本。
- **選購的** — 客戶自行維修所使用的零件是選購的。這些零件也設計用於客戶自行維修之用。不過，如果您要求 HP 為您更換，則可能需要也可能不需要負擔額外的費用，端視針對此產品指定的保固服務類型而定。

備註：某些 HP 零件沒有消費者可自行維修的設計。為符合客戶保固，HP 需要授權的服務供應商更換零件。這些零件在圖示的零件目錄中，被標示為「否」。

基於材料取得及環境允許的情況下，CSR 零件將於下一個工作日以快遞寄送。在環境的允許下當天或四小時內送達，則可能需要額外的費用。若您需要協助，可致電「HP 技術支援中心」，會有一位技術人員透過電話來協助您。不論損壞的零件是否必須退回，HP 皆會在與 CSR 替換零件一起運送的材料中註明。若要將損壞的零件退回 HP，您必須在指定的一段時間內（通常為五 (5) 個工作天），將損壞的零件寄回 HP。損壞的零件必須與寄送資料中隨附的相關技術文件一併退還。如果無法退還損壞的零件，HP 可能要向您收取替換費用。針對客戶自行維修情形，HP 將負責所有運費及零件退還費用並指定使用何家快遞/貨運公司。

如需 HP 的「客戶自行維修」方案詳細資訊，請連絡您當地的服務供應商。至於北美方案，請參閱 HP 網站 (http://www.hp.com/go/selfrepair)。

고객 셀프 수리

HP 제품은 수리 시간을 최소화하고 결함이 있는 부품 교체 시 더욱 융통성을 발휘할 수 있도록 하기 위해 고객 셀프 수리(CSR) 부품을 다량 사용하여 설계되었습니다. 진단 기간 동안 HP(또는 HP 서비스 공급업체 또는 서비스 협력업체)에서 CSR 부품을 사용하여 수리가 가능하다고 판단되면 HP는 해당 부품을 바로 사용자에게 보내어 사용자가 교체할 수 있도록 합니다. CSR 부품에는 두 가지 종류가 있습니다.

- **고객 셀프 수리가 의무 사항인 필수 부품.** 사용자가 HP에 이 부품의 교체를 요청할 경우 이 서비스에 대한 출장비 및 작업비가 청구됩니다.
- **고객 셀프 수리가 선택 사항인 부품.** 이 부품들도 고객 셀프 수리가 가능하도록 설계되었습니다. 하지만 사용자가 HP에 이 부품의 교체를 요청할 경우 사용자가 구입한 제품에 해당하는 보증 서비스 유형에 따라 추가 비용 없이 교체가 가능할 수 있습니다.

참고: 일부 HP 부품은 고객 셀프 수리가 불가능하도록 설계되었습니다. HP는 만족스러운 고객 보증을 위해 공인 서비스 제공업체를 통해 부품을 교체하도록 하고 있습니다. 이러한 부품들은 Illustrated Parts Catalog에 "No"라고 표시되어 있습니다.

CSR 부품은 재고 상태와 지리적 조건이 허용하는 경우 다음 영업일 납품이 가능하도록 배송이 이루어집니다. 지리적 조건이 허용하는 경우 추가 비용이 청구되는 조건으로 당일 또는 4시간 배송이 가능할 수도 있습니다. 도움이 필요하시면 HP 기술 지원 센터로 전화하십시오. 전문 기술자가 전화로 도움을 줄 것입니다. HP는 결함이 발생한 부품을 HP로 반환해야 하는지 여부를 CSR 교체 부품과 함께 배송된 자료에 지정합니다. 결함이 발생한 부품을 HP로 반환해야 하는 경우에는 지정된 기간 내(통상 영업일 기준 5일)에 HP로 반환해야 합니다. 이 때 결함이 발생한 부품은 제공된 포장 재료에 넣어 관련 설명서와 함께 반환해야 합니다. 결함이 발생한 부품을 반환하지 않는 경우 HP가 교체 부품에 대해 비용을 청구할 수 있습니다. 고객 셀프 수리의 경우, HP는 모든 운송 및 부품 반환 비용을 부담하며 이용할 운송업체 및 택배 서비스를 결정합니다.

HP 고객 셀프 수리 프로그램에 대한 자세한 내용은 가까운 서비스 제공업체에 문의하십시오. 북미 지역의 프로그램에 대해서는 HP 웹 사이트(http://www.hp.com/go/selfrepair)를 참조하십시오.

Acronyms and abbreviations

ABEND

abnormal end

ACU

Array Configuration Utility

ADU

Array Diagnostics Utility

AMP

Advanced Memory Protection

ASR

Automatic Server Recovery

BBWC

battery-backed write cache

BIOS

Basic Input/Output System

CSR

Customer Self Repair

DHCP

Dynamic Host Configuration Protocol

DIMM

dual inline memory module

FC

Fibre Channel

iLO 2

Integrated Lights-Out 2

IML

Integrated Management Log

NBP

Network Bootstrap Program

ORCA

Option ROM Configuration for Arrays

PCIe

peripheral component interconnect express

POST

Power-On Self Test

PXE

Preboot Execution Environment

RBSU

ROM-Based Setup Utility

SAS

serial attached SCSI

SATA

serial ATA

SIM

Systems Insight Manager

UID

unit identification

USB

universal serial bus

VCA

Version Control Agent

VCRM

Version Control Repository Manager

Index

A

access panel 14
ACU (Array Configuration Utility) 45
ADU (Array Diagnostic Utility) 52
ASR (Automatic Server Recovery) 47
Automatic Server Recovery (ASR) 47

B

battery 72, 77
battery replacement notice 72, 77
BBWC (battery-backed write cache) 30
beep codes 70
BIOS Serial Console 45
BIOS upgrade 47
BSMI notice 76
buttons 6

C

cables 34, 58, 74
cabling 34
cache module 30
Canadian notice 75
Care Pack 54
CD-ROM deployment 41
Change Control 54
component identification 6, 8
configuration of system 19, 37, 43
configuration tools 43
connecting to the network 17
connection problems 58
connectors 6
contacting HP 81
creating a disk image 42
CSR (customer self repair) 81

D

Declaration of Conformity 74
deployment methods 37, 38, 40
diagnosing problems 55, 60
diagnostic tools 43, 47, 51
diagnostics utility 51
DIMM installation guidelines 27
DIMM slot locations 10
DIMMs 28
documentation 45
drivers 37, 53

E

electrostatic discharge 79
enclosure, installing 15
Erase Utility 48
error messages 70
European Union notice 75

F

features 6
Federal Communications Commission (FCC) notice 73, 74
flowcharts 58, 59, 60, 62, 64, 66, 68
front panel components 6
front panel LEDs 7

G

general diagnosis flowchart 60
grounding methods 79

H

hard drive bays 6
hard drive LEDs 8
hard drives 8, 20
hard drives, determining status of 8
hard drives, installing 20
hardware options 20
hardware options installation 20
health driver 47
heatsink 21
HP Insight Control Environment Suites 49
HP Insight Diagnostics 51
HP Insight Remote Support software 52
HP Insight Server Migration Pack software for ProLiant 49
HP ProLiant Essentials Foundation Pack 48

HP ProLiant Essentials Virtualization Management Software 49
HP Systems Insight Manager, overview 48
HP technical support 81

I

identification number 73
iLO 2 (Integrated Lights-Out 2) 12, 37, 38, 47
iLO 2 activity LED 47
IML (Integrated Management Log) 52
Important Safety Information document 56
Insight Diagnostics 51, 53
installation, server options 20
installing DIMMs 28
installing hardware 20
installing memory 28
Integrated Management Log (IML) 52
interconnect bay numbering 16
interconnect device mapping 16
internal SD support 51
internal USB connector 9

J

Japanese notice 76

K

Korean notices 76

L

laser devices 77
LED, health 7, 8
LED, power button 7
LED, system power 7
LEDs 6, 8
LEDs, front panel 7, 8
LEDs, hard drive 8
LEDs, NIC 7
LEDs, unit identification (UID) 7
local I/O cable 34
loose connections 58

M

Management Agents 48
management tools 37, 47
memory 27
memory, mirrored 45
mezzanine board connectors 9
mezzanine card 29

O

Online ROM Flash Component Utility 54
operating systems 53
operations 12
options installation 15, 20
ORCA (Option ROM Configuration for Arrays) 46
OS boot problems flowchart 66

P

phone numbers 81
POST error messages 70
POST problems flowchart 64
Power On/Standby button 6
powering down 12
powering up 12, 44
power-on problems flowchart 62
pre-diagnostic steps 55
preparation procedures 12, 57
problem diagnosis 55
processor 21
processor socket 9, 21
processor socket cover 9, 21
ProLiant Support Pack (PSP) 53
PSPs, overview 53

R

RBSU (ROM-Based Setup Utility) 43
RBSU configuration 44
redundant ROM 50
regulatory compliance notices 73, 75
release button 6
removing the access panel 14
removing the server blade 13
required information 81
resources 45, 55
resources, troubleshooting 55
ROM redundancy 50
ROM, updating 54
ROM-Based Setup Utility (RBSU) 43
ROMPaq utility 47, 50

S

safety considerations 56
safety information 50
SAS drives 8
SAS hard drive LEDs 8
SATA hard drive 8
SATA hard drive LEDs 8

scripted installation 40
SD support 51
serial label pull tab 6
serial number 46
series number 73
server blade handle 6
server blades, installing 18
server fault indications flowchart 68
server features and options 20
service notifications 58
SmartStart autorun menu 43
SmartStart Scripting Toolkit 40
SmartStart, overview 43
software drivers 37
specifications 80
specifications, environmental 80
specifications, server 80
start diagnosis flowchart 59
static electricity 79
StorageWorks Library and Tape Tools (L&TT) 48
support 52, 81
support packs 43
supported operating systems 53
switches, interconnect 15
symbols on equipment 56
symptom information 57
system board battery 77
system board components 9
system board thumbscrews 9
System Erase Utility 48
system maintenance switch 10
Systems Insight Manager 48

T

Taiwan battery recycling notice 78
technical support 81
telephone numbers 81
troubleshooting 55, 58

U

updating the system ROM 50
USB connectors 11
USB support 50
utilities 37
utilities, deployment 40, 43

V

video connector 11

W

warnings 56