RETIRED: This document has been officially retired, and the base products listed herein are now considered obsolete and are no longer available for sale. Consequently, the information contained within may no longer be current. This document is provided exclusively for reference and informational purposes.

Overview

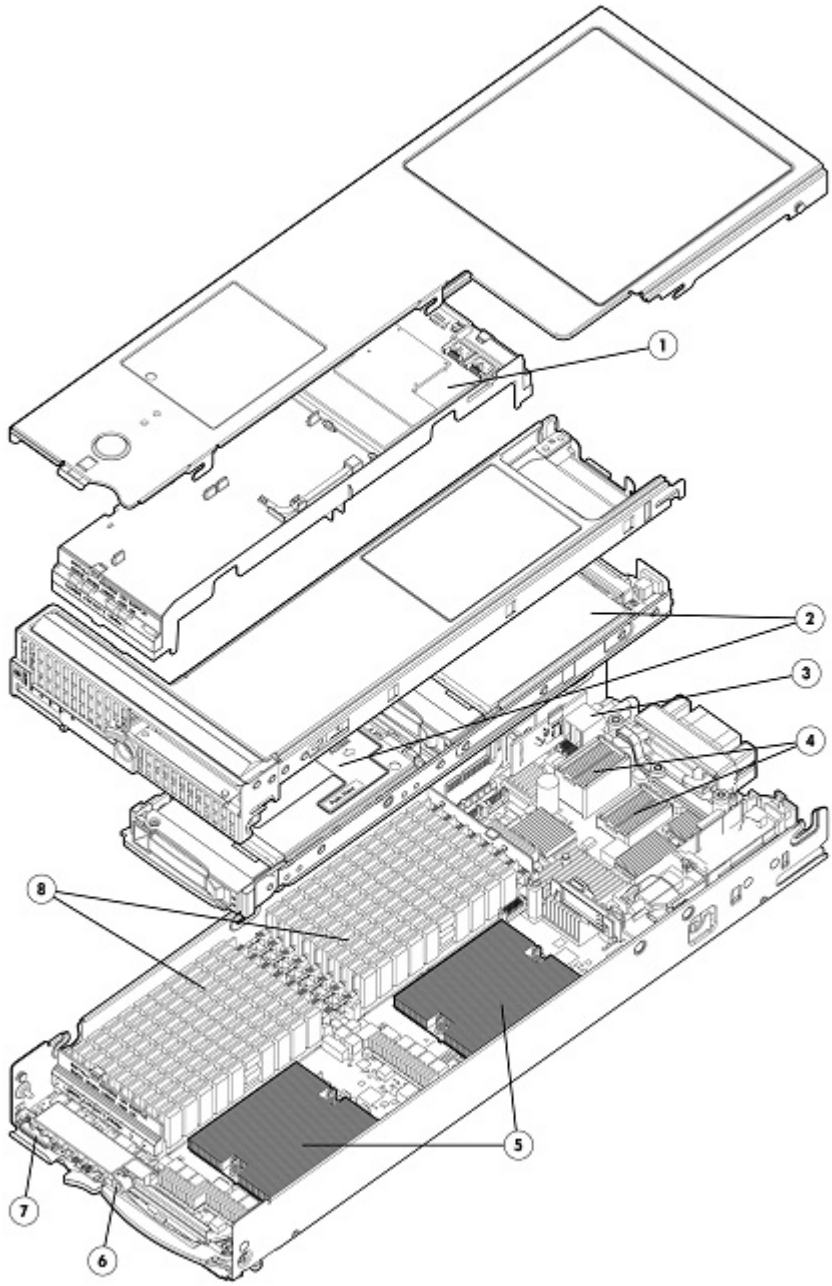

HP ProLiant BL465c G7 Server Blade

1. Smart Array P410i storage controller (available as an option in factory integrated models)
2. Two (2) small form factor (SFF) hot plug drive bays
3. Internal USB connector
   Internal MicroSD card slot
5. Up to two (2) Multi-Core AMD Opteron™ 6100 Series processors
6. System power button and LED
7. Local I/O connector

Overview

4. Two (2) mezzanine I/O expansion slots
8. Sixteen (16) PC3-8500 DDR3 Registered DIMMs, PC3-10600 DDR3 Registered DIMMs, or PC3-10600 DDR3 Unbuffered DIMMs

What's New

- Support for AMD Opteron™ 6204 Processors
- Support for DDR3-1600 (PC3-12800R) Registered 4GB, 8GB Single Rank, and 16GB Dual Rank Memory

At A Glance

This document covers the HP ProLiant BL465c G7 server blade only. For more information on HP BladeSystem c-Class Enclosures and HP BladeSystem c-Class Interconnect and Mezzanine Components, please see the following QuickSpecs:

- HP BladeSystem c3000 Enclosure QuickSpecs:
  http://h18000.www1.hp.com/products/quickspecs/12790_div/12790_div.html
- HP BladeSystem c7000 Enclosure QuickSpecs:
  http://h18000.www1.hp.com/products/quickspecs/12810_div/12810_div.html
- HP BladeSystem c-Class Interconnect and Mezzanine Components:
  http://h18004.www1.hp.com/products/blades/components/c-class-interconnects.html
  http://h18004.www1.hp.com/products/blades/components/c-class-adapters.html

The BL465c G7 helps simplify network connections, lower infrastructure costs, and delivers the performance you expect for demanding application workloads.

HP ProLiant BL465c G7 server blade includes:

- **Processor**:
  - Up to two (2) Multi-Core AMD Opteron™ 6200 or 6100 Series processors
    - Sixteen-Core supports up to 2.3 GHz; 8x2MB Level 2 cache; 16 MB Level 3 cache
    - Twelve-Core supports up to 2.6 GHz; 6x2MB Level 2 cache; 16 MB Level 3 cache
    - Eight-Core supports up to 3.0 GHz; 4x2MB Level 2 cache; 16 MB Level 3 cache
    - Four-Core supports up to 3.3 GHz, 2x2MB Level 2 cache; 16MB Level 3 cache
  - AMD SR5690 and SP5100 chipsets
- **Memory**:
  - Sixteen (16) DIMM slots
  - Up to 512GB of PC3L-10600 DDR3 Registered (RDIMM) memory, operating at 1066 MHz when fully populated at 2 DIMMs per channel in 16 slots
  - Up to 256GB of PC3-10600 DDR3 Registered (RDIMM) memory, operating at 1333 MHz when fully populated at 2 DIMMs per channel in 16 slots
  - Up to 256GB of PC3-12800 DDR3 Registered (RDIMM) memory, operating at 1600 MHz when fully populated at 2 DIMMs per channel in 16 slots
  - Up to 64GB of PC3-10600 DDR3 Unbuffered (UDIMM) memory, operating at 1333 MHz when fully populated at 2 DIMMs per channel in 16 slots
  - Supporting memory interleaving (2:1)
    NOTE: Each processor memory bus will operate at up to 1600 MHz with two single-rank or dual-rank (SR/DR) DIMMs per processor memory channel, up to 1333 MHz with either one quad-rank (QR) or two single-rank/dual-rank (SR/DR) DIMMs per processor memory channel, and 1066 MHz with up to two QR or one QR and one SR/DR DIMMs per processor memory channel with standard voltage (1.5V, PC3) DIMMs. Memory bus will operate one speed slower when low voltage (1.35V, PC3L) memory is installed. Memory bus speeds may be further limited by the speed of the memory used as well.
- **Storage Controller**:

Overview

- Smart Array P410i RAID controller with 1 GB flash-backed write cache (FBWC). Supports RAID 0,1.
  NOTE: The HP Smart Array P410i controller is required for all blades that support hot plug drives. See Factory Integrated Models section for more information.

- **Internal Drive Support**:
  - Up to two (2) small form factor (SFF) SAS or SATA hot plug hard disk drives or SATA solid state drives
    NOTE: SAS, SATA, and/or SSD drives cannot be mixed within the server.
- **Network Controller**:
  - One (1) integrated NC551i Dual Port FlexFabric 10Gb Converged Network Adapter supporting stateless TCP/IP offload, TCP Offload Engine (TOE), Fibre Channel over Ethernet (FCoE) and iSCSI protocols
    NOTE: Flex-10 capability requires the use of an HP Virtual Connect Flex-10 10Gb Ethernet module. Learn more at: www.hp.com/go/virtualconnect
    NOTE: Fibre Channel over Ethernet (FCoE) capability requires the use of an HP Virtual Connect FlexFabric 10GB/24-port Module or HP 10GbE Pass-Thru Module.
    NOTE: Each port is autosensing 1 Gb / 10 Gb, and can interoperate with 1 Gb HP BladeSystem c-Class interconnect components. Both ports will operate at the same speed.
  - One (1) additional embedded 10/100 network adapter dedicated to iLO 3 management
- **Mezzanine Support**:
  - Two (2) I/O expansion mezzanine slots
  - Supports up to two (2) mezzanine cards
    - Dual-Port FlexFabric Adapter mezzanine option
    - Dual-Port Fibre Channel Mezzanine (4-Gb or 8-Gb) options for SAN connectivity
    - Dual-Port FlexFabric Converged Network Adapter
    - Ethernet server adapter mezzanine options for additional network ports
    - InfiniBand (IB) Mezzanine options for low latency server interconnectivity
    - I/O Accelerator mezzanine options for high transaction rate local storage
    - SAS mezzanine option for external direct attach and shared SAS storage
- **Expansion Blade Support**:
  - Supports one (1) optional storage, tape, or PCI expansion blade
- **Internal Media Support**:
  - One (1) internal USB 2.0 connector for security key devices and USB drive key
  - One (1) internal Micro SD-HC card slot
- **Trusted Platform Module**:
  - One (1) internal TPM 1.2 module connector
- **Form Factor**:
  - HP ProLiant BL465c G7 server blade plugs into the BladeSystem c3000 and c7000 enclosures
- **Infrastructure Management**:
  - This server blade requires the latest version of the Onboard Administrator firmware. This firmware release may also require other subsystem firmware upgrades. For information on the latest firmware versions, please see the Blades Firmware Maintenance website at http://h18004.www1.hp.com/products/blades/components/c-class-compmatrix.html
  - HP Integrated Lights-Out 3 management processor for simplified server setup, health monitoring and recovery, power and thermal control, and lights-out remote administration.
  - HP Insight Control, a product option, delivers essential infrastructure management that can help save time and money by making it easy to deploy, migrate, monitor, control and optimize your IT infrastructure through a single, simple management console. Insight Control supports Windows-based central management servers
  - HP Matrix Operating Environment for ProLiant, a product option, is an integrated command center that enables IT Staff personnel to continuously analyze and optimize a converged infrastructure, while automating and reducing the cost of common data center tasks by as much as 40 percent. This ultimately enables them to dynamically keep pace with the organization's changing business requirements.
- **Operating Systems and Virtualization Software**:
  - Supports Windows, RHEL, SLES, VMware, Oracle Solaris, Oracle Linux Unbreakable Enterprise Kernel, and Citrix XenServer
- **Enclosures**:

Overview

- HP offers two (2) different c-Class server blade enclosures to meet your individual needs:
  - The HP BladeSystem c7000 rack enclosure is 10U high and holds up to sixteen (16) ProLiant BL465c G7 servers plugged vertically.
  - The HP BladeSystem c3000 rack enclosure is 6U high and holds up to eight (8) HP ProLiant BL465c G7 servers plugged horizontally.
- Server blades, storage blades, and interconnect modules are all designed to fit into the c7000 and c3000 enclosures.
- For additional enclosure information, please see: http://h18004.www1.hp.com/products/blades/components/enclosures/c-class/index.html.
  NOTE: For optimal cooling and system performance the BL465c G7 requires the c7000 enclosure to be configured with 10 fans and the c3000 enclosure to be configured with 6 fans.

- **Warranty**:
  - This product is covered by a global limited warranty and supported by HP Services and a worldwide network of HP Authorized Channel Partners. Hardware diagnostic support and repair is available for three years from date of purchase. Support for software and initial setup is available for 90 days from date of purchase. Enhancements to warranty services are available through HP Care Pack services or customized service agreements. Hard drives have either a one year or three year warranty; refer to specific hard drive QuickSpecs for details.
    NOTE: Server warranty includes 3-year Parts, 3- year Labor, 3-year on-site support. Warranty repairs may be accomplished through the use of Customer Self Repair (CSR) parts. These parts fall into two categories: 1) Mandatory CSR parts are designed for easy replacement. A travel and labor charge will result when customers decline to replace a Mandatory CSR part; 2) Optional CSR parts are also designed for easy replacement but may involve added complexity. Customers may choose to have HP replace Optional CSR parts at no charge. Additional information regarding worldwide limited warranty and technical support is available at:
    http://h18004.www1.hp.com/products/servers/platforms/warranty/index.html

Standard Features

NOTE: For the Standard Features shipped in the "Factory Integrated Models", please see the "Configuration Information - Factory Integrated Models" section.

Processor One of the following depending on Model	**Sixteen-Core Processors** AMD Opteron™ 6276 (2.30GHz/16-core/16MB/115W) Processor AMD Opteron™ 6274 (2.20GHz/16-core/16MB/115W) Processor AMD Opteron™ 6272 (2.10GHz/16-core/16MB/115W) Processor Low Power AMD Opteron™ 6262HE (1.60GHz/16-core/16MB/85W) Processor **Twelve-Core Processors** AMD Opteron™ 6238 (2.60GHz/12-core/16MB/115W) Processor AMD Opteron™ 6234 (2.40GHz/12-core/16MB/115W) Processor AMD Opteron™ 6176 (2.3GHz/12-core/12MB/115W) Processor AMD Opteron™ 6174 (2.2GHz/12-core/12MB/115W) Processor AMD Opteron™ 6172 (2.1GHz/12-core/12MB/115W) Processor Low Power AMD Opteron™ Model 6166HE (1.8GHz/12-core/12MB/85W) Processor Low Power AMD Opteron™ Model 6164 HE (1.7GHz/12-core/12MB/85W) Processor **Eight-Core Processors** AMD Opteron™ 6220 (3.0GHz/8-core/16MB/115W) Processor AMD Opteron™ 6212 (2.60GHz/8-core/16MB/115W) Processor AMD Opteron™ 6140 (2.6GHz/8-core/12MB/115W) Processor AMD Opteron™ 6136 (2.4GHz/8-core/12MB/115W) Processor AMD Opteron™ 6134 (2.3GHz/8-core/12MB/115W) Processor Low Power AMD Opteron™ 6132HE (2.2GHz/8-core/12MB/85W) Processor Low Power AMD Opteron™ 6128HE (2.0GHz/8-core/12MB/85W) Processor **Four-Core Processors** AMD Opteron™ 6204 (3.3GHz/4-core/16MB/115W) Processor **NOTE:** Processor wattage references reflect Thermal Design Power (TDP). For more information on TDP and Average CPU Power (ACP) visit: http://www.amd.com/acp.	
Upgradeability	Upgradeable to dual (2) processors	
Cache Memory One of the following depending on Model	6200 Series	8 x 2MB Level 2 cache memory 16 MB Lever 3 cache memory
	6100 Series	512 KB Level 2 cache memory per core 12 MB Level 3 cache memory
Chipset	AMD SR5690 and SP5100	

Standard Features

Memory

Type	DDR3 Registered (RDIMM) or Unbuffered (UDIMM)
Standard	8 GB (2 x 4 GB)
Maximum (RDIMM)	512 GB (16 x 32 GB) at 1333 MHz
Maximum (UDIMM)	64 GB (16 x 4 GB) at 1333 MHz

NOTE: Each processor memory bus will operate at up to 1600 MHz with two single-rank or dual-rank (SR/DR) DIMMs per processor memory channel, up to 1333 MHz with either one quad-rank (QR) or two single-rank/dual-rank (SR/DR) DIMMs per processor memory channel, and 1066 MHz with up to two QR or one QR and one SR/DR DIMMs per processor memory channel with standard voltage (1.5V, PC3) DIMMs. Memory bus will operate one speed slower when low voltage (1.35V, PC3L) memory is installed. Memory bus speeds may be further limited by the speed of the memory used as well. Please see the Online Memory Configuration Tool at: www.hp.com/go/ddr3memory-configurator.

NOTE: Kits described as PC3L include Low Voltage DIMMs. For more information on ProLiant Energy Efficient Features, see: www.hp.com/go/ddr3memory-configurator

DDR3 memory options part number decoder

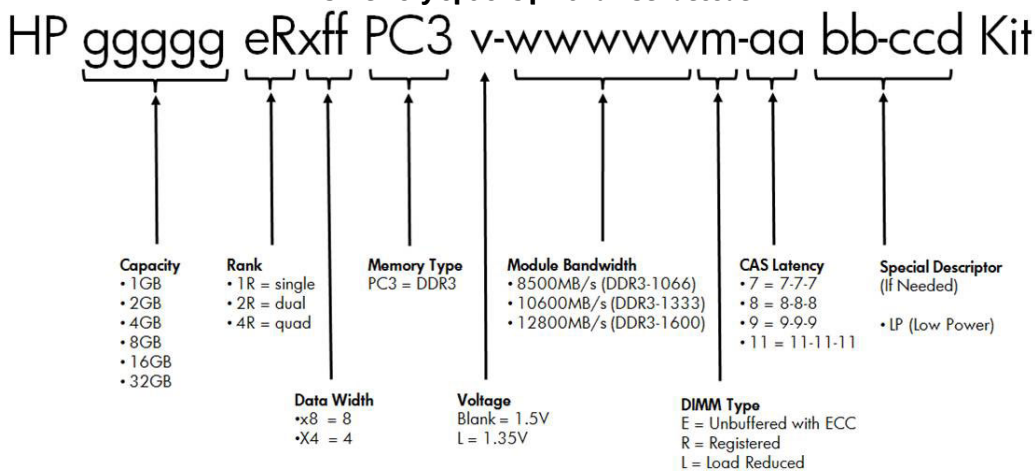

Network Controller

One (1) integrated NC551i Dual Port FlexFabric 10Gb Converged Network Adapter

NOTE: Flex-10 capability requires the use of an HP Virtual Connect Flex-10 10Gb Ethernet module. Learn more at: www.hp.com/go/virtualconnect.

NOTE: Fibre Channel over Ethernet (FCoE) capability requires the use of an HP Virtual Connect FlexFabric 10GB/24-port Module or HP 10GbE Pass-Thru Module.

One (1) additional 10/100 network adapter dedicated to iLO 3 Management

I/O Expansion Slots

Two (2) I/O expansion mezzanine slots (All x8 PCI Express)

Integrated Manageability

HP Integrated Lights-Out 3

Standard Features

Storage Controller	HP Smart Array P410i Controller	1GB memory module with flash-backed write cache (FWBC). Supports RAID 0,1.
	NOTE: The HP Smart Array P410i controller is required for all blades that support hot plug drives. See Factory Integrated Models section for more information.	
Maximum Internal Storage One of the following depending on Model	Hot Plug SAS	2TB SAS (2 x 1TB) Serial SCSI
	Hot Plug SATA	2TB SATA (2 x 1TB) Serial ATA
	Hot Plug SATA SSD	800GB SATA SSD (2 x 400GB) Serial ATA SSD
	Hot Plug SAS SSD	1.6TB SAS SSD (2 x 800GB) Serial SCSI
	NOTE: SAS, SATA, and/or SSD drives cannot be mixed within the server.	
Graphics	Integrated ATI RN-50 1280 x 1024 x 16M color	
	Resolution Color Depths	Depths 1280 x 1024, 16.7M , 64k, 256,16 1024 x 768, 16.7M, 64k, 256, 16 800 x 600, 16.7M, 64k, 256, 16 640 x 480, 16.7M, 64k, 256, 16

Fibre Channel Support

Two (2) optional dual-port Fibre Channel HBAs are supported by the HP ProLiant BL465c G7. Each mezzanine circuit board connects directly to the server blade system board. These Fibre Channel HBAs are available via option kits and must be ordered separately.

HBA mezzanine card option kits:

Emulex LPe1105 4Gb Fibre Channel Host Bus Adapter for c-Class BladeSystem (PN 403621-B21)

- Field-proven reliability and performance for a broad range of applications using drivers and management tools that are fully compatible with all Emulex HBAs

Emulex LPe1205 8Gb Fibre Channel Host Bus Adapter for c-Class BladeSystem (PN 456972-B21)

- Exceptional performance, enhanced security, and scalable management for virtual server and enterprise-class applications

QLogic QMH2462 4Gb Fibre Channel Host Bus Adapter for c-Class BladeSystem (PN 403619-B21)

- Uses common drivers which means that customers can standardize on one QLogic driver whether they are using the QMH2462 or other HBAs powered by QLogic

QLogic QMH2562 8Gb Fibre Channel Host Bus Adapter for c-Class BladeSystem (PN 451871-B21)

- Provides a first step into the 8Gb future, advanced, embedded support for virtualized environments and reduced power consumption

HP BLc Brocade 804 8Gb Fibre Channel Host Bus Adapter (PN 590647-B21)

- Application oriented Quality of Service (AQoS) providing the ability to configure, prioritize, and optimize traffic flows from virtual machines and/or applications to the target port

Standard Features

Brocade, Emulex and QLogic Fibre Channel HBAs for HP BladeSystem c-Class feature:

- Optimal performance utilizing PCI Express
- 4/2/1Gb/s auto negotiating speeds (4Gb HBAs)
- 8/4/2Gb/s auto negotiation speeds (8Gb HBAs)
- Dual-ports for redundant path connections
- Up to two FC HBAs per server blade providing redundant FC HBA support
- Optimized for HP Storage products and supported by third party SAN vendors
- Support for Microsoft® Windows®, Linux, VMware ESX and Citrix XenServer™ operating system environments

Compatible SAN

HP ProLiant BL465c G7 server blades are optimized for HP MSA, EVA, and XP
HP ProLiant BL465c G7 server blades are compatible with select 3rd party SANs (please see blade storage page for more details:
http://h18004.www1.hp.com/products/blades/components/c-class-sans.html)

HP Virtual Connect

HP Virtual Connect is an interconnect option for BladeSystem c-Class that simplifies server connectivity to data and storage networks, and reduces costs. Unique HP Flex-10 technology makes maximum use of network bandwidths, provide dynamic tuning and enable extreme flexibility to meet individual server and infrastructure requirements by allocating up to 4 network connections per server port. Virtual Connect FlexFabric modules extend those capabilities to allocate one function per port to storage connections. HP Virtual Connect Enterprise Manager (VCEM) provides server management software with a central console to administer network connections and workloads for thousands of servers. For more information on Virtual Connect Enterprise Manager see: www.hp.com/go/vcem. For more information on Virtual Connect Ethernet, Fibre Channel, Converged Network and management options see:
www.hp.com/go/virtualconnect

HP Insight management software

HP Service Pack for ProLiant

HP Service Pack for ProLiant is an enhanced, re-packaging of ProLiant systems software and firmware, but is still based on the rich legacy of ProLiant Support Packs (PSPs) and HP Smart Update Firmware DVD that are originally found in the Insight Foundation suite for ProLiant. It is a comprehensive systems software and firmware release offered as a tested solution on all ProLiant servers supported by Insight Foundation version 8.70. It evolves beyond separate installation of HP PSPs and the HP Smart Update Firmware DVD by providing a single image that combines both of these products. It offers combined firmware and systems software packaging and improved processes for drivers, utilities, agents, non agents, and other utilities that are required to keep pace in today's rapidly expanding technology infrastructure.

Main or base releases for HP Service Pack for ProLiant are planned approximately 3 times a year, but look for interim update releases that will capture hot fixes released between main releases. HP Service Pack for ProLiant is supported on all HP ProLiant SL/ML/DL 100, 300, 500, 700, and 900 servers and BladeSystems series servers that are supported with Insight Foundation version 8.70 and will supersede and replace Insight Foundation. It is downloadable from: www.hp.com/go/server/service_packs/updates as a web only release and is not available on media.

The first release of HP Service Pack for ProLiant is Version 2011.06.0. It

	contains the first comprehensive collection of firmware and system software components, all tested together that include drivers, agents, non-agents, utilities, firmware packages for servers, controllers, storage, blades, enclosures, and all components and options supported by HP ProLiant Support Packs for Windows and Linux version 8.70. Additionally, VMware offline firmware updates will be included. More information can be found at this link for HP Service Pack for ProLiant: www.hp.com/go/server/service_packs
HP Insight Foundation	Insight Foundation is being baselined at version v8.70 which means the following: ● Its Media Kit (contains 2 SmartStart CDs, the Firmware DVD, and the Management DVD) will continue to ship with all supported ProLiant G7 or earlier BTO servers until the last supported server is no longer shipping. ● The Media Kit will not be updated past version 8.70. ● ProLiant G7 or earlier CTO servers are able to order the Media Kit with the understanding that the media is not updated. Please check specific server QuickSpecs for availability of CTO Kit. ● PSP and Firmware DVD downloads will be updated through 2Q 2012 at the HP Insight Foundation Suite for ProLiant downloads tab: http://www.hp.com/go/foundation Customers are urged to use the replacement product, HP Service Pack for ProLiant, instead of Insight Foundation Suite which is found at these location: ● www.hp.com/go/spp ● www.hp.com/go/spp/download
HP Integrated Lights-Out (iLO)	HP Integrated Lights-Out (iLO) simplifies server setup, health monitoring, power and thermal control, and lights-out remote administration of ProLiant ML, DL, and BL servers. HP iLO functions without additional software and can be accessed from any location via a web browser. HP iLO works hand-in-hand with HP Systems Insight Manager, Insight Control suites, and Matrix Operating Environment for ProLiant, helping customers unleash the value of the ProLiant platform and deliver the highest possible quality of IT service. For more information, visit: www.hp.com/go/iLO
HP Insight Control	HP Insight Control, a product option, delivers essential infrastructure management that can help save time and money by making it easy to deploy, migrate, monitor, remote control, and optimize your IT infrastructure through a single, simple management console. HP Insight Control, a product option, delivers essential infrastructure management that can help save time and money by making it easy to deploy, migrate, monitor, remote control, and optimize your IT infrastructure through a single, simple management console. For more information, see http://www.hp.com/go/insightcontrol HP Insight Control includes one year of 24 x 7 HP Software Technical Support and Update Service ensuring rapid access to HP support staff and proactive delivery of software updates. For more information about this service, please

Standard Features

		visit: http://www.hp.com/services/insight.
	HP Matrix Operating Environment	The HP Matrix Operating Environment (Matrix OE) for ProLiant and Integrity servers is an integrated command center that helps you instantly adjust to dynamic business demands. This advanced infrastructure management software lets you reduce the cost of common data center tasks by up to 40 percent while keeping pace with your changing business. The HP Matrix OE includes the automated provisioning, optimization, and recovery management capabilities for HP CloudSystem Matrix, the ideal platform for private cloud and Infrastructure as a Service (IaaS). **NOTE:** For more information, visit: http://www.hp.com/go/matrixoe
High Performance Clusters	HP Cluster Platforms	HP Cluster Platforms are specifically engineered, factory-integrated large-scale ProLiant clusters optimized for High Performance Computing, with a choice of servers, networks and software. Operating system options include specially priced offerings for Red Hat Enterprise Linux and SUSE Linux Enterprise Server, as well as Microsoft Windows HPC Server. A Cluster Platform Configurator simplifies ordering. http://www.hp.com/go/clusters
	HP HPC Interconnects	High Performance Computing (HPC) interconnect technologies are available for this server as part of the HP Cluster Platform portfolio. These high-speed InfiniBand and Gigabit interconnects are fully supported by HP when integrated within an HP cluster. Flexible, validated solutions can be defined with the help of configuration tools. http://www.hp.com/techservers/clusters/ucp/index.html
	HP Insight Cluster Management Utility	HP Insight Cluster Management Utility (CMU) is an HP-licensed and HP-supported suite of tools that are used for lifecycle management of hyperscale clusters of Linux ProLiant systems. CMU includes software for the centralized provisioning, management and monitoring of nodes. CMU makes the administration of clusters user friendly, efficient, and effective. http://www.hp.com/go/cmu
	HP HPC Linux Value Pack	HP HPC Linux Value Pack (Value Pack) is an HP-licensed and HP-supported option to HP Insight CMU, for the development and deployment of applications on HPC Cluster Platforms. Value Pack includes the Platform LSF workload scheduler and Platform Application Center, as well as the HP-MPI parallelization library. HP HPC Linux Value Pack
Operating Systems and Virtualization Software	Microsoft Windows Server Red Hat Enterprise Linux (RHEL) SUSE Linux Enterprise Server (SLES) Solaris VMware ESX Citrix XenServer **NOTE:** For more information on HP's Certified and Supported ProLiant Servers for OS and Virtualization Software and latest listing of software drivers available for your server, including how to purchase from HP, please visit our OS Support Site at: http://www.hp.com/go/ossupport.	

Standard Features

Availability

Dual-Port Fibre Channel Mezzanine Card for redundant SAN connection
Embedded dual-port 10Gb Converged Network Adapter for redundant LAN connections
Two (2) hot-plug SAS/SATA/SSD drive bays and integrated RAID (Smart Array P410i) controller with flash-backed write cache
Redundant ROM on each server blade
Multiple mezzanine I/O expansion
Advanced ECC Memory
Online memory spare
Network adapter teaming (network fault tolerance, transmit load balancing, switch-assisted load balancing)

Industry Standard Compliance

ACPI 2.0 Compliant
PCI 2.2 Compliant
WOL Support
Microsoft® Logo certifications
USB 2.0 Support

Security

- Power-on password
- Administrator's password
- Integrated Lights-Out 3 with:
  - 12 customizable user accounts
  - SSL encryption
  - Secure Shell version 2
  - Advanced Encryption Standard (AES) and Triple Data Encryption Standard (3DES) on browser, CLP and XML scripting interface
  - AES and RC4 encryption of video
  - Disable via a global setting
- Keyboard password
- External USB port enable/disable
- Network server mode
- Serial interface control
- TPM (Trusted Platform Module) 1.2 option

Factory Express Portfolio for Servers and Storage

HP Factory Express offers configuration, customization, integration and deployment services for HP servers and storage products. Customers can choose how their factory solutions are built, tested, integrated, shipped and deployed.

Factory Express offers service packages for simple configuration, racking, installation, complex configuration and design services as well as individual factory services, such as image loading, asset tagging, and custom packaging. HP products supported through Factory Express include a wide array of servers and storage: HP Integrity, HP ProLiant, HP ProLiant Server Blades, HP BladeSystem, HP 9000 servers as well as the MSAxxxx, VA7xxx, EVA, XP, rackable tape libraries and configurable network switches.

For more information on Factory Express services on your specific server model please contact your sales representative or go to: http://www.hp.com/go/factory-express.

Standard Features

HP Simple Configurator

SCE is a guided self service tool to help sales and non technical people provide customers with initial configurations in 3 to 5 minutes. You may then send the configuration on for configuration help, or use in your existing ordering processes. If you require "custom" rack configuration or configuration for products not available in SCE, please contact HP's Customer Business Center or an Authorized Partner for assistance. http://www.hp.com/products/configurator

Service and Support

HP Technology Services for Industry Standard Servers and BladeSystem
Capitalizing on HP ProLiant server and HP BladeSystem capabilities requires a service partner who understands your increasingly complex business technology environment. That's why it makes sense to team up with the people who know HP infrastructure hardware and software best - the experienced professionals at HP Services.

Protect your business beyond warranty with HP Care Pack Services
HP Care Pack services offer complete care and support expertise with committed response choices designed to meet your IT and business needs.

HP Foundation Care services offer scalable reactive support-packages for HP industry-standard servers and software. You can choose the type and level of service that is most suitable for your IT and business needs. HP Proactive Care delivers high levels of system availability through proactive service management and advanced technical response.

Recommended HP Care Pack Services for your HP product

Optimized Care

3-Year HP 6 hour Call to Repair Response, Proactive Care
Combined reactive and proactive support for hardware and software helping optimize your systems and delivering high levels of availability through proactive service management and advanced technical response. Hardware problem resolution to return the hardware in operating condition within 6 hours of the initial service request. A Technical Account Manager, as your single point of contact, will own your call or issue end to end until resolved.
http://h20195.www2.hp.com/v2/GetPDF.aspx/4AA3-8855EEE.pdf

HP Install c-Class Server Blade Service
This easy-to-buy, easy-to-use HP Care Pack service helps ensure that your new HP hardware is installed smoothly, efficiently, and with minimal disruption of your IT and business operations.

Standard Care

3-Year HP 24x7 4 hour response, Proactive Care Service
This service gives you combined reactive and proactive support including rapid access to our Advanced Solution Center to manage and prevent problems and a Technical Support Specialist with a broad level of technical knowledge that will engage with additional technical expertise as needed from HP's vast global resources.
http://h20195.www2.hp.com/v2/GetPDF.aspx/4AA3-8855EEE.pdf

HP Install c-Class Server Blade Service
This easy-to-buy, easy-to-use HP Care Pack service helps ensure that your new HP hardware is installed smoothly, efficiently, and with minimal disruption of your IT and business operations.

Service and Support

Related Services

HP Proactive Care Personalized Support - Environmental Option
The Personalized Support option provides an assigned Account Support Manager who can bring best practices from across the industry plus extra technical skills to your IT team. This option is only available as an add-on to HP Proactive Care Support.

HP Proactive Select Service
Provides a flexible way to purchase HP best-in-class consultancy and technical services. You can buy Proactive Select Service Credits when you purchase your hardware and then use the credits over the next 12 months. http://h20195.www2.hp.com/V2/GetPDF.aspx/4AA2-3842ENN.pdf

Additional HP Care Pack services can be found at:
http://www.hp.com/go/cpc

Insight Online/Insight Remote Support

HP Insight Remote Support provides 24 X 7 remote monitoring, proactive notifications, and problem resolution. This comes at no additional cost with your HP solution. Learn more about Insight Remote Support http://www.hp.com/go/insightremotesupport and Insight Online http://www.hp.com/go/insightonline

NOTE: Insight Remote Support is a prerequisite for Proactive Care. All blades within a single HP BladeSystem enclosure must be at the same service level.

For more information

Personalized online support portal with access to information, tools and experts to support HP business products. Submit support cases online, chat with HP experts, access support resources or collaborate with peers. Learn more http://www.hp.com/go/hpsc

HP's Support Center Mobile App allows you to resolve issues yourself or quickly connect to an agent for live support. Now, you can get access to personalized IT support anywhere, anytime.
HP Insight Remote Support and HP Support Center are available at no additional cost with a HP warranty, HP Care Pack or HP contractual support agreement.

NOTE: HP Support Center Mobile App is subject to local availability.

Parts and Materials

HP will provide HP-supported replacement parts and materials necessary to maintain the covered hardware product in operating condition, including parts and materials for available and recommended engineering improvements.

Parts and components that have reached their maximum supported lifetime and/or the maximum usage limitations as set forth in the manufacturer's operating manual, product quick-specs, or the technical product data sheet will not be provided, repaired, or replaced as part of these services.

The defective media retention service feature option applies only to Disk or eligible SSD/Flash Drives replaced by HP due to malfunction.

For more information

To learn more on HP ProLiant servers and HP BladeSystem servers, please contact your HP sales representative or HP Authorized ServiceOne Channel Partner. Or visit: www.hp.com/services/bladesystem

Models

Sixteen-Core Models

NOTE: For the Standard Features shipped in the "Factory Integrated Models", please see the "Configuration Information - Factory Integrated Models" section.

NOTE: Not all models are available in all regions. Check with your local country HP offices for availability.

HP ProLiant BL465c G7 6276 1P 8GB-R P410i/1GB FBWC Hot Plug SAS/SATA SFF Server 655086-B21 **HP ProLiant BL465c G7 6272 1P 8GB-R P410i/1GB FBWC Hot Plug SAS/SATA SFF Server** 655085-B21	**Processor(s)** One of the following depending on Model	(1) AMD Opteron™ 6276 (2.30GHz/16-core/16MB/115W) Processor (1) AMD Opteron™ 6272 (2.10GHz/16-core/16MB/115W) Processor
	Cache Memory One of the following depending on Model	8 x 2MB Level 2 cache memory 16 MB Level 3 cache memory
	Memory	8 GB (2 x 4 GB) PC3-10600, Registered DDR3-1333 **NOTE:** Total 16 DIMM slots.
	Network Adapter	One (1) embedded HP NC551i Dual Port FlexFabric 10Gb Converged Network Adapter
	Storage Controller	Smart Array P410i RAID controller with 1 GB cache flash-backed write cache (FBWC)
	Hard Drives	None ships standard; (2) SFF SAS/SATA/SSD drive bays
	Internal Storage One of the following depending on Model	Up to 2TB SAS Up to 2TB SATA Up to 800GB SATA SSD Up to 1.6TB SAS SSD
	Optical Drive	None ships standard
	Form Factor	Up to eight (8) half-height blades supported in the HP BladeSystem c3000 Enclosure Up to sixteen (16) half-height blades supported in HP BladeSystem c7000 Enclosure

Twelve-Core Models

NOTE: For the Standard Features shipped in the "Factory Integrated Models", please see the "Configuration Information - Factory Integrated Models" section.

NOTE: Not all models are available in all regions. Check with your local country HP offices for availability.

HP ProLiant BL465c G7 6238 1P 8GB-R P410i/1GB FBWC Hot Plug SAS/SATA SFF Server 655087-B21 **HP ProLiant BL465c G7 6176 1P 8GB-R P410i/1GB FBWC 2 SFF Server** 632982-B21 **HP ProLiant BL465c G7 6174 1P 8GB-R P410i/1GB FBWC Hot Plug 2 SFF**	**Processor(s)** One of the following depending on Model	(1) AMD Opteron™ 6238 (2.60GHz/12-core/16MB/115W) Processor (1) AMD Opteron™ 6176 (2.3GHz/12-core/16MB/115) Processor (1) AMD Opteron™ 6174 (2.2 GHz/12-core/12MB/115W) Processor (1) AMD Opteron™ 6172 (2.2GHz/12-core/12MB/115W) Processor
	Cache Memory One of the following depending on Model	6200: 8x2MB Level 2 cache memory 6100; 16 MB Level 3 cache memory 6100:12 MB Level 3 cache memory; 512 KB Level 2 cache memory per core
	Memory	8 GB (2 x 4 GB) PC3-10600, Registered DDR3-1333 **NOTE:** Total 16 DIMM slots.
	Network Adapter	One (1) embedded HP NC551i Dual Port FlexFabric 10Gb Converged Network Adapter
	Storage Controller	Smart Array P410i RAID controller with 1 GB cache flash-backed write cache (FBWC)

Models

FBWC Hot Plug 2 SFF Server 518859-B21	**Hard Drives**	None ships standard; (2) SFF SAS/SATA/SSD drive bays
	Internal Storage One of the following depending on Model	Up to 2TB SAS Up to 2TB SATA Up to 800GB SATA SSD Up to 1.6TB SAS SSD
HP ProLiant BL465c G7 6172 1P 8GB-R P410i/1GB FBWC Hot Plug 2 SFF Server 518851-B21	**Optical Drive**	None ships standard
	Form Factor	Up to eight (8) half-height blades supported in the HP BladeSystem c3000 Enclosure Up to sixteen (16) half-height blades supported in HP BladeSystem c7000 Enclosure

Eight-Core Models

HP ProLiant BL465c G7 6132HE 1P 8GB-R P410i/1GB FBWC 2 SFF Server 632985-B21	**Processor(s)** One of the following depending on Model	(1) Low Power AMD Opteron™ 6132HE(2.2GHz/8-core/12MB/85W) Processor (1) AMD Opteron™ 6136 (2.4GHz/8-core/12MB/115W) Processor (1) Low Power AMD Opteron™ 6128HE (2.0GHz/8-core/12MB/85W) Processor
	Cache Memory One of the following depending on Model	512 KB Level 2 cache memory per core 12 MB Level 3 cache memory
HP ProLiant BL465c G7 6136 1P 8GB-R P410i/1GB FBWC Hot Plug 2 SFF Server 518854-xx1	**Memory**	8 GB (2 x 4 GB) PC3-10600, Registered DDR3-1333
	Network Adapter	One (1) embedded HP NC551i Dual Port FlexFabric 10Gb Converged Network Adapter
	Storage Controller	Smart Array P410i RAID controller with 1 GB cache flash-backed write cache (FBWC)
	Hard Drives	None ships standard; (2) SFF SAS/SATA/SSD drive bays
	Internal Storage One of the following depending on Model	Up to 2TB SAS Up to 2TB SATA Up to 800GB SATA SSD Up to 1.6TB SAS SSD
	Optical Drive	None ships standard
	Form Factor	Up to eight (8) half-height blades supported in the HP BladeSystem c3000 Enclosure Up to sixteen (16) half-height blades supported in HP BladeSystem c7000 Enclosure

Country Code Key	xx=20	Brazil

NOTE: This section lists some of the steps required to configure a Factory Integrated Model. To ensure only valid configurations are ordered, HP recommends the use of an HP approved configurator. Contact your local sales representative for information on CTO product offerings and requirements.
NOTE: HP does not allow factory integration of options into standard models listed above.
Configure-to-order servers must start with a CTO Chassis.
NOTE: FIO indicates that this option is a Factory Installable Option.

Step 1: Base Server Blade Configuration

HP Models	HP ProLiant BL465c G7 Configure-to-order Server	518857-B21
	Configurable Model ships with:	
	One (1) integrated HP NC551i Dual Port FlexFabric 10Gb Converged Network Adapter and one (1) additional 10/100 server adapter dedicated to iLO 3 management	
	Two (2) small form factor (SFF) SAS/SATA/SSD hot plug drive bays	
	HP Integrated Lights-Out 3 (iLO 3)	

Step 2: Choose Required Options (one of the following from each list unless otherwise noted)

HP Processors	**For single (1) processor configuration choose (one of the following):**	
	NOTE: If two (2) processors are desired, select one xxxxxx-L21 and one xxxxxx-B21.	
	Sixteen-Core Processors	
	HP BL465c G7 AMD Opteron™ 6276 (2.30GHz/16-core/16MB/115W) FIO Processor Kit	655093-L21
	HP BL465c G7 AMD Opteron™ 6274 (2.20GHz/16-core/16MB/115W) FIO Processor Kit	655091-L21
	HP BL465c G7 AMD Opteron™ 6272 (2.10GHz/16-core/16MB/115W) FIO Processor Kit	655090-L21
	HP BL465c G7 AMD Opteron™ 6262HE (1.60GHz/16-core/16MB/85W) FIO Processor Kit	655096-L21
	Twelve-Core Processors	
	HP BL465c G7 AMD Opteron™ 6238 (2.60GHz/12-core/16MB/115W) FIO Processor Kit	655094-L21
	HP BL465c G7 AMD Opteron™ 6234 (2.40GHz/12-core/16MB/115W) FIO Processor Kit	655092-L21
	Eight-Core Processors	
	HP BL465c G7 AMD Opteron™ 6220 (3.0GHz/8-core/16MB/115W) FIO Processor Kit	655095-L21
	HP BL465c G7 AMD Opteron™ 6212 (2.60GHz/8-core/16MB/115W) FIO Processor Kit	655089-L21
	Four-Core Processors	
	HP BL465c G7 AMD Opteron™ 6204 (3.30GHz/4-core/16MB/115W) FIO Processor Kit	672513-L21
HP Memory	**Registered DIMMs (RDIMMs)**	
	HP 2GB (1x2GB) Dual Rank x8 PC3-10600 (DDR3-1333) Registered CAS-9 Memory Kit	593907-B21
	HP 4GB (1x4GB) Single Rank x4 PC3-12800 (DDR3-1600) Registered CAS-11 Memory Kit	676331-B21
	HP 4GB (1x4GB) Single Rank x4 PC3-10600 (DDR3-1333) Registered CAS-9 Memory Kit	593911-B21
	HP 4GB (1x4GB) Single Rank x4 PC3L-10600 (DDR3-1333) Registered CAS-9 Low Power Memory Kit	604500-B21
	HP 8GB (1x8GB) Single Rank x4 PC3-12800 (DDR3-1600) Registered CAS-11 Memory Kit	676333-B21
	HP 8GB (1x8GB) Dual Rank x4 PC3-10600 (DDR3-1333) Registered CAS-9 Memory Kit	593913-B21
	HP 8GB (1x8GB) Dual Rank x4 PC3L-10600 (DDR3-1333) Registered CAS-9 Low Power Memory Kit	604502-B21

HP 16GB (1x16GB) Quad Rank x4 PC3-8500 (DDR3-1066) Registered CAS-7 Memory Kit	593915-B21
HP 16GB (1x16GB) Dual Rank x4 PC3L-10600 (DDR3-1333) Registered CAS-9 LP Memory Kit	627808-B21
HP 16GB (1x16GB) Dual Rank x4 PC3-12800R (DDR3-1600) Registered CAS-11 Memory Kit	684066-B21
HP 32GB (1x32GB) Quad Rank x4 PC3L-8500 (DDR3-1066) Registered CAS-7 LP Memory Kit	627810-B21
Unbuffered with ECC DIMMs (UDIMMs)	
HP 2GB (1x2GB) Dual Rank x8 PC3-10600 (DDR3-1333) Unbuffered CAS-9 Memory Kit	593921-B21
HP 4GB (1x4GB) Dual Rank x8 PC3-10600 (DDR3-1333) Unbuffered CAS-9 Memory Kit	593923-B21
NOTE: All DDR3 memory option kits consist of one DIMM per kit. For detailed memory configuration rules and guidelines, please use the Online DDR3 Memory Configuration Tool: www.hp.com/go/ddr3memory-configurator	
NOTE: A minimum of two (2) DIMMs per processor are required.	
NOTE: Kits described as PC3L include Low Voltage DIMMs. For more information on ProLiant Energy Efficient Features, see: www.hp.com/go/proliant-energy-efficient.	
NOTE: Each processor memory bus will operate at up to 1600 MHz with two single-rank or dual-rank (SR/DR) DIMMs per processor memory channel, up to 1333 MHz with either one quad-rank (QR) or two single-rank/dual-rank (SR/DR) DIMMs per processor memory channel, and 1066 MHz with up to two QR or one QR and one SR/DR DIMMs per processor memory channel with standard voltage (1.5V, PC3) DIMMs. Memory bus will operate one speed slower when low voltage (1.35V, PC3L) memory is installed. Memory bus speeds may be further limited by the speed of the memory used as well.	

Step 3: Choose Additional Factory Integration Options

HP Storage Controller	HP Smart Array P410i/1G FBWC 2-ports Int PCIe x8 SAS Controller **NOTE:** Includes 1 GB cache with flash-backed write cache (FBWC). **NOTE:** The Smart Array P410i controller is required for all blades that support hot plug drives.	588184-B22

Step 4: Choose Additional Options for Factory Integration

NOTE: For additional Core Options and Additional Options please see options sections below. For additional options, including server blade enclosures interconnect and mezzanine options and power subsystem options; please see the following:
HP BladeSystem c3000 Enclosure QuickSpecs:
http://h18000.www1.hp.com/products/quickspecs/12790_div/12790_div.html
HP BladeSystem c7000 Enclosure QuickSpecs:
http://h18000.www1.hp.com/products/quickspecs/12810_div/12810_div.html
and HP BladeSystem c-Class Interconnect and Mezzanine Components:
http://h18004.www1.hp.com/products/blades/components/c-class-interconnects.html
http://h18004.www1.hp.com/products/blades/components/c-class-adapters.html

Core Options

NOTE: Some options may not be integrated at the factory. To ensure only valid configurations are ordered, HP recommends the use of an HP approved configurator. Contact your local sales representative for additional information.

HP Ethernet Mezzanine Options	**Gigabit Ethernet Mezzanines**	
	HP NC325m PCI Express Quad Port Gigabit Server Adapter **NOTE:** If the NC325m is installed in mezzanine slot 1 of a half-height server, connectivity will be provided on only 2 of the 4 ports.	416585-B21
	HP NC360m Dual Port 1GbE BL-c Adapter	445978-B21
	HP NC364m Quad Port 1GbE BL-c Adapter **NOTE:** If the NC364m is installed in mezzanine slot 1 of a half-height server, connectivity will be provided on only 2 of the 4 ports.	447883-B21
	HP NC382m PCI Express Dual Port Multifunction Gigabit Server Adapter	453246-B21
	10 Gigabit Ethernet Mezzanines **NOTE:** A 10 Gigabit Ethernet adapter is required for each server blade connecting to a 10Gb interconnect in bays 3-8 (HP BladeSystem c7000 Enclosure) or bays 2-4 (HP BladeSystem c3000 Enclosure). **NOTE:** Each 10 Gigabit Ethernet adapter requires a minimum of 2GB of server memory. **NOTE:** Each 10 Gigabit Either adapter supports linking at 1000Mbps or 10000Mbps when not connected to a Flex-10 enabled module and will link with all current 1Gb switches at 1Gb. **NOTE:** The ROM Based Setup Utility (RBSU) feature allows for the configuring of a FlexFabric Adapter to any of the supported protocols. For example iSCSI to FCoE (Fibre Channel over Ethernet). Note that a HP Virtual Connect profile takes precedence over the setting in this menu. Also, some FlexFabric Adapters may require that network boot be enabled in order to configure the protocol. If the protocol is configured without enabling network boot with certain FlexFabric Adapters, the protocol may not take effect. Once the protocol has taken effect on the first boot after configuring this option, network boot may be disabled if desired.	
	HP NC532m Dual Port 10GbE Multifunction BL-c Adapter	467799-B21
	HP NC542m Dual Port Flex-10 10GbE BL-c Adapter	539857-B21
	HP NC550m 10Gb 2-port PCIe x8 Flex-10 Ethernet Adapter	581204-B21
	HP BLc NC551m Dual Port FlexFabric 10Gb Converged Network Adapter	580151-B21
	HP NC552m 10Gb 2-port Flex-10 Ethernet Adapter	610609-B21
	HP NC553m 10Gb 2-port FlexFabric Adapter	613431-B21
HP Fibre Channel Mezzanine Options	**4Gb Fibre Channel Mezzanines**	
	Emulex LPe1105 4Gb Fibre Channel Host Bus Adapter for c-Class BladeSystem	403621-B21
	QLogic QMH2462 4Gb Fibre Channel Host Bus Adapter for c-Class BladeSystem	403619-B21
	8Gb Fibre Channel Mezzanines	
	Emulex LPe1205 8Gb Fibre Channel Host Bus Adapter for c-Class BladeSystem	456972-B21
	QLogic QMH2562 8Gb Fibre Channel Host Bus Adapter for c-Class BladeSystem	451871-B21
	HP BLc Brocade 804 8Gb Fibre Channel Host Bus Adapter	590647-B21

Core Options

HP Processors	**Sixteen-Core Processors**	
	HP BL465c G7 AMD Opteron™ 6276 (2.30GHz/16-core/16MB/115W) Processor Kit	655093-B21
	HP BL465c G7 AMD Opteron™ 6274 (2.20GHz/16-core/16MB/115W) Processor Kit	655091-B21
	HP BL465c G7 AMD Opteron™ 6272 (2.10GHz/16-core/16MB/115W) Processor Kit	655090-B21
	HP BL465c G7 AMD Opteron™ 6262HE (1.60GHz/16-core/16MB/85W) Processor Kit	655096-B21
	Twelve-Core Processors	
	HP BL465c G7 AMD Opteron™ 6238 (2.60GHz/12-core/16MB/115W) Processor Kit	655094-B21
	HP BL465c G7 AMD Opteron™ 6234 (2.40GHz/12-core/16MB/115W) Processor Kit	655092-B21
	HP BL465c G7 AMD Opteron™ 6176 (2.3GHz/12-core/12MB/115W) Processor Kit	632983-B21
	HP BL465c G7 AMD Opteron™ 6174 (2.2GHz/12-core/12MB/115W) Processor Kit	518860-B21
	HP BL465c G7 AMD Opteron™ 6172 (2.1GHz/12-core/12MB/115W) Processor Kit	518852-B21
	HP BL465c G7 AMD Opteron™ 6166HE (1.8GHz/12-core/12MB/85W) Processor Kit	632991-B21
	HP BL465c G7 AMD Opteron™ 6164HE (1.7GHz/12-core/12MB/85W) Processor Kit	596207-B21
	Eight-Core Processors	
	HP BL465c G7 AMD Opteron™ 6220 (3.0GHz/8-core/16MB/115W) Processor Kit	655095-B21
	HP BL465c G7 AMD Opteron™ 6212 (2.60GHz/8-core/16MB/115W) Processor Kit	655089-B21
	HP BL465c G7 AMD Opteron™ 6140 (2.6GHz/8-core/12MB/115W) Processor Kit	632989-B21
	HP BL465c G7 AMD Opteron™ 6136 (2.4GHz/8-core/12MB/115W) Processor Kit	518855-B21
	HP BL465c G7 AMD Opteron™ 6134 (2.3GHz/8-core/12MB/115W) Processor Kit	518863-B21
	HP BL465c G7 AMD Opteron™ 6132HE (2.2GHz/8-core/12MB/85W) Processor Kit	632986-B21
	HP BL465c G7 AMD Opteron™ 6128HE (2.0GHz/8-core/12MB/85W) Processor Kit	518868-B21
	Four-Core Processors	
	HP BL465c G7 AMD Opteron™ 6204 (3.30GHz/4-core/16MB/115W) Processor Kit	672513-B21
	NOTE: HP ProLiant BL465c G7 processor option kits contain one (1) processor.	

HP Memory	**Registered DIMMs (RDIMMs)**	
	HP 2GB (1x2GB) Dual Rank x8 PC3-10600 (DDR3-1333) Registered CAS-9 Memory Kit	593907-B21
	HP 4GB (1x4GB) Single Rank x4 PC3-12800 (DDR3-1600) Registered CAS-11 Memory Kit	676331-B21
	HP 4GB (1x4GB) Single Rank x4 PC3-10600 (DDR3-1333) Registered CAS-9 Memory Kit	593911-B21
	HP 4GB (1x4GB) Single Rank x4 PC3L-10600 (DDR3-1333) Registered CAS-9 Low Power Memory Kit	604500-B21
	HP 8GB (1x8GB) Single Rank x4 PC3-12800 (DDR3-1600) Registered CAS-11 Memory Kit	676333-B21
	HP 8GB (1x8GB) Dual Rank x4 PC3-10600 (DDR3-1333) Registered CAS-9 Memory Kit	593913-B21
	HP 8GB (1x8GB) Dual Rank x4 PC3L-10600 (DDR3-1333) Registered CAS-9 Low Power Memory Kit	604502-B21
	HP 16GB (1x16GB) Quad Rank x4 PC3-8500 (DDR3-1066) Registered CAS-7 Memory Kit	593915-B21
	HP 16GB (1x16GB) Dual Rank x4 PC3L-10600 (DDR3-1333) Registered CAS-9 LP Memory Kit	627808-B21
	HP 16GB (1x16GB) Dual Rank x4 PC3-12800R (DDR3-1600) Registered CAS-11 Memory Kit	684066-B21

Core Options

	HP 32GB (1x32GB) Quad Rank x4 PC3L-8500 (DDR3-1066) Registered CAS-7 LP Memory Kit	627810-B21
	Unbuffered with ECC DIMMs (UDIMMs)	
	HP 2GB (1x2GB) Dual Rank x8 PC3-10600 (DDR3-1333) Unbuffered CAS-9 Memory Kit	593921-B21
	HP 4GB (1x4GB) Dual Rank x8 PC3-10600 (DDR3-1333) Unbuffered CAS-9 Memory Kit	593923-B21
	NOTE: All DDR3 memory option kits consist of one DIMM per kit. For detailed memory configuration rules and guidelines, please use the Online DDR3 Memory Configuration Tool: www.hp.com/go/ddr3memory-configurator.	
	NOTE: A minimum of two (2) DIMMs per processor are required.	
	NOTE: Kits described as PC3L include Low Power DIMMs. For more information on ProLiant Energy Efficient Features, see: www.hp.com/go/proliant-energy-efficient.	
	NOTE: Each processor memory bus will operate at up to 1600 MHz with two single-rank or dual-rank (SR/DR) DIMMs per processor memory channel, up to 1333 MHz with either one quad-rank (QR) or two single-rank/dual-rank (SR/DR) DIMMs per processor memory channel, and 1066 MHz with up to two QR or one QR and one SR/DR DIMMs per processor memory channel with standard voltage (1.5V, PC3) DIMMs. Memory bus will operate one speed slower when low voltage (1.35V, PC3L) memory is installed. Memory bus speeds may be further limited by the speed of the memory used as well.	
HP Hard Drives	**NOTE:** The components of a storage subsystem (e.g. the drive, the HBA/controller, firmware, and the server backplane) should operate at the same data transfer rate or the system bandwidth will be negotiated down to an acceptable level for all components. **NOTE:** Hard drives have either a one year or three year warranty; refer to the specific hard drive QuickSpecs for details. **NOTE:** SAS, SATA, and/or SSD drives cannot be mixed within the server.	
	SAS Hot Plug SFF (2.5-inch) Enterprise (ENT) Drives	
	HP 900GB 6G SAS 10K rpm SFF (2.5-inch) Dual Port Enterprise 3yr Warranty Hard Drive	619291-B21
	HP 600GB 6G SAS 10K rpm SFF (2.5-inch) Dual Port Enterprise 3yr Warranty Hard Drive	581286-B21
	HP 450GB 6G SAS 10K rpm SFF (2.5-inch) Dual Port Enterprise 3yr Warranty Hard Drive	581284-B21
	HP 300GB 6G SAS 15K rpm SFF (2.5-inch) Hot Plug Enterprise 3 yr Warranty Hard Drive	627117-B21
	HP 300GB 6G SAS 10K rpm SFF (2.5-inch) Dual Port Enterprise 3yr Warranty Hard Drive	507127-B21
	HP 146GB 6G SAS 15K rpm SFF (2.5-inch) Dual Port Enterprise 3yr Warranty Hard Drive	512547-B21
	NOTE: Please see the for Technical Specifications and additional information: http://h18000.www1.hp.com/products/quickspecs/12244_div/12244_div.html (Worldwide)	
	SAS Hot Plug SFF (2.5-inch) Midline (MDL) Drives	
	HP 1TB 6G SAS 7.2K rpm SFF (2.5-inch) Dual Port Midline 1yr Warranty Hard Drive	605835-B21
	HP 500GB 6G SAS 7.2K rpm SFF (2.5-inch) Dual Port Midline 1yr Warranty Hard Drive	507610-B21
	SATA Hot Plug SFF (2.5-inch) Midline (MDL) Drives	
	HP 1TB 3G SATA 7.2K rpm SFF (2.5-inch) Hot Plug Midline 1yr Warranty Hard Drive	625609-B21
	HP 500GB 3G SATA 7.2K rpm SFF (2.5-inch) Midline 1yr Warranty Hard Drive	507750-B21
	6G SAS Hot Plug Enterprise Performance Solid State Drives	

Core Options

HP 400GB 6G SAS SLC SFF (2.5-inch) Enterprise Performance 3yr Warranty Solid State Drive	632494-B21
HP 200GB 6G SAS SLC SFF (2.5-inch) Enterprise Performance 3yr Warranty Solid State Drive	632492-B21
6G SAS ME Hot Plug SFF (2.5-inch) Enterprise Mainstream Solid State Drives	
HP 800GB 6G SAS Mainstream Endurance SFF 2.5-in Enterprise Mainstream 3yr Warranty Solid State Drive	690823-B21
HP 400GB 6G SAS Mainstream Endurance SFF 2.5-in ENT Mainstream 3yr Warranty Solid State Drive	690821-B21
HP 200GB 6G SAS Mainstream Endurance SFF 2.5-in Enterprise Mainstream 3yr Warranty Solid State Drive	690819-B21
NOTE: Please see the QuickSpecs for Technical Specifications and additional information: http://h18000.www1.hp.com/products/quickspecs/14038_div/14038_div.html (Worldwide)	
SATA Hot Plug 2.5" Enterprise Mainstream Solid State Drives	
HP 400GB 3G SATA MLC SFF (2.5-inch) Enterprise Mainstream 3yr Warranty Solid State Drive	636597-B21
HP 200GB 3G SATA MLC SFF (2.5-inch) Enterprise Mainstream 3yr Warranty Solid State Drive	636595-B21
HP 100GB 3G SATA MLC SFF (2.5-inch) Enterprise Mainstream 3yr Warranty Solid State Drive	636593-B21
NOTE: Please see the QuickSpecs for Technical Specifications and additional information: http://h18000.www1.hp.com/products/quickspecs/14038_div/14038_div.html (Worldwide)	

Additional Options

NOTE: Some options may not be integrated at the factory. To ensure only valid configurations are ordered, HP recommends the use of an HP approved configurator. Contact your local sales representative for additional information.

HP Insight Software	**HP Insight Control**	
	HP Insight Control including 1yr 24x7 Technical Support and Updates Electronic License	T9074BAE
	HP Insight Control including 1yr 24x7 Technical Support and Updates Single Server License	452148-B22
	HP Insight Management Media Kit **NOTE:** HP Insight Management Media Kit contains DVDs without licenses. Contains HP Systems Insight Manager, HP Insight Control, HP Matrix Operating Environment, and Virtual Connect Enterprise Manager software. Uses an integrated installer to perform quick and accurate software installation and updates. **NOTE:** Electronic and Flexible-Quantity licenses can be used to purchase multiple licenses with a single activation key. **NOTE:** Customer will receive a license entitlement certificate. The license entitlement certificate must be redeemed online or via fax in order to obtain the license activation key(s). Includes one year of 24 x 7 HP Software Technical Support and Update Service. **NOTE:** Licenses ship without media. The HP Insight Management Media Kit can be ordered separately, or can be downloaded at: http://www.hp.com/go/insightupdates. **NOTE:** For additional license kits please see the Insight Control QuickSpecs at: http://h18004.www1.hp.com/products/quickspecs/12631_div/12631_div.html (Worldwide)	436222-B21
	HP iLO Advanced for BladeSystem	
	HP iLO Advanced Blade Electronic License with 3yr 24x7 Tech Support and Updates	BD503AAE
	HP iLO Advanced Blade 1 Server License with 3yr 24x7 Tech Support and Updates	BD502A
	HP iLO Advanced for BladeSystem including 1yr 24x7 Support Electronic License	TA851AAE
	HP iLO Advanced for BladeSystem including 1yr 24x7 Support Single Server License **NOTE:** Licenses ship without media. **NOTE:** Customer will receive a license entitlement certificate, which must be redeemed online or via fax in order to obtain the license activation key(s). Includes one year of 24 x 7 HP Software Technical Support Service. **NOTE:** For additional license kits, including electronic delivery options, please see the HP Integrated Lights-Out (iLO) QuickSpecs at: http://h18000.www1.hp.com/products/quickspecs/12362_div/12362_div.html (Worldwide)	512488-B21
	HP Insight Control server deployment	
	HP Insight Control Server Deployment including 1yr 24x7 Support Electronic License	T9082AAE
	HP Insight Control Server Deployment including 1yr 24x7 Support Single Server License **NOTE:** Licenses ship without media. **NOTE:** Customer will receive a license entitlement certificate, which must be redeemed online or via fax in order to obtain the license activation key(s). Includes one year of 24 x 7 HP Software Technical Support Service. **NOTE:** For additional license kits please see the Insight Control QuickSpecs at: http://h18004.www1.hp.com/products/quickspecs/12631_div/12631_div.html (Worldwide)	452151-B21

Additional Options

High Performance Clusters	HP Insight Cluster Management Utility 1yr 24x7 Flexible License **NOTE:** This part number can be used to purchase one certificate for multiple licenses with a single activation key. Each license is for one node (server). Customer will receive a printed end user license agreement and license entitlement certificate via physical shipment. The license entitlement certificate must be redeemed online in order to obtain a license key. **NOTE:** For additional license kits please see the QuickSpecs at: http://h18004.www1.hp.com/products/quickspecs/12612_div/12612_div.html (Worldwide)	QL803B
	HP Insight Cluster Management Utility 3yr 24x7 Flexible License **NOTE:** These part numbers can be used to purchase one certificate for multiple licenses and support with a single activation key. Each license is for one node (server). Customer will receive a printed end user license agreement and license entitlement certificate via physical shipment. The license entitlement certificate must be redeemed online in order to obtain a license key. Customer also will receive a support agreement.	BD476A
	HP Insight Cluster Management Utility Media **NOTE:** Order a minimum of one license per cluster to purchase media including software and documentation, which will be delivered to the customer, and also licenses Insight CMU management. No license key is delivered or required. **NOTE:** For additional license kits please see the QuickSpecs at: http://h18004.www1.hp.com/products/quickspecs/12612_div/12612_div.html (Worldwide)	BD477A
	HP High Performance Computing Linux Value Pack 1 Processor Flexible License for ProLiant Servers **NOTE:** This part number can be used to purchase one certificate for multiple licenses with a single activation key. Each license is for one socket (a.k.a. processor). Customer will receive a printed end user license agreement and license entitlement certificate via physical shipment. The license entitlement certificate must be redeemed online in order to obtain a license key. **NOTE:** For additional license kits please see the QuickSpecs at: http://h18004.www1.hp.com/products/quickspecs/13485_div/13485_div.html (Worldwide)	TC293B
	HP High Performance Computing Linux Value Pack Media Kit for ProLiant Servers **NOTE:** This part number can be used to purchase media including software and documentation, which will be delivered to the customer. **NOTE:** For additional license kits please see the QuickSpecs at: http://h18004.www1.hp.com/products/quickspecs/13485_div/13485_div.html (Worldwide)	TC294A

Additional Options

HP Security	HP Trusted Platform Module Option **NOTE:** The TPM (Trusted Platform Module) is a microcontroller chip that can securely store artifacts used to authenticate the server platform. These artifacts can include passwords, certificates and encryption keys. Windows® BitLocker™ Drive Encryption (BitLocker) is a data protection feature available in Windows Server® 2008. BitLocker leverages the enhanced security capabilities of a Trusted Platform Module (TPM) version 1.2. The TPM works with BitLocker to help protect user data and to ensure that a server running Windows Server 2008 has not been tampered with while the system was offline. **NOTE:** For more information about TPM, including a white paper, go to: www.hp.com/go/TPM. **NOTE:** ProLiant OS pre-installed units will come with the partition required for TPM deployment. **NOTE:** The TPM key is unique to every TPM deployed server and must be retained. Misplacing or losing the key could result in data loss.	488069-B21
HP Storage Controller	**HP Smart Array P712m Controller**	
	HP Smart Array P712m/256 6Gb 2-ports Int/2-ports Ext Mezzanine SAS Controller	488348-B21
	HP Smart Array P711m Controller	
	HP Smart Array P711m/1G 6Gb FBWC 4-ports Ext Mezzanine SAS Controller	513778-B21
	HP Smart Array P700m Controller	
	HP Smart Array P700m/512 4-ports Ext PCIe x8 SAS Controller	508226-B21
	NOTE: Supports all HP ProLiant Server Blades, except the HP ProLiant BL2x220c and BL685c G7 server blades. **NOTE:** Please see the QuickSpecs for Technical Specifications and additional information: http://h18000.www1.hp.com/products/quickspecs/13175_div/13175_div.html (Worldwide)	
	Optional Upgrades	
	HP Smart Array P-Series Low Profile Battery **NOTE:** The BL465c G7 supports a maximum of one array controller battery. If one Smart Array P700m controller with cache battery kit is ordered for factory integration, the internal Smart Array P410i cache module capacitor will be removed and shipped with the server for customer installation.	452348-B21
	HP Smart Array Advanced Pack including 1yr 24x7 Technical Support and Updates Single Server License **NOTE:** A license key, a minimum of 256MB cache, and battery kit is required to enable Smart Array Advanced Pack features. For more information go to: http://www.hp.com/go/saap	516471-B21

Additional Options

HP I/O Expansion Options	HP 640GB IO Accelerator for BladeSystem c-Class	BK836A
	HP 320GB IO Accelerator for BladeSystem c-Class	AJ878B
	NOTE: Please see the QuickSpecs for Technical Specifications and additional information: http://h18000.www1.hp.com/products/quickspecs/13220_div/13220_div.html (Worldwide)	
HP InfiniBand Mezzanine Options	HP 4X QDR QLogic InfiniBand Dual Port Mezzanine HCA for c-Class BladeSystem	583210-B21
	HP 4X QDR InfiniBand ConnectX-2 Dual Port Mezzanine HCA for c-Class BladeSystem	592519-B21
	NOTE: Please see the QuickSpecs for Technical Specifications and additional information: http://h18000.www1.hp.com/products/quickspecs/12586_div/12586_div.html (Worldwide)	
HP Ultrium Tape Blades	HP LTO-4 SB1760c Tape Blade **NOTE:** LTO-4 Ultrium technology	AQ697B
	NOTE: Please see the QuickSpecs for Technical Specifications and additional configuration information at: http://h18000.www1.hp.com/products/quickspecs/12729_div/12729_div.html (Worldwide) **NOTE:** Please visit the BladeSystem c-Class enclosure QuickSpecs for a complete list of recommended data protection solutions for BladeSystem c-Class enclosures: http://h18004.www1.hp.com/products/blades/components/enclosures/c-class/index.html.	
HP Storage Blades	HP LTO-5 SB3000c Tape Blade **NOTE:** Please see the for Technical Specifications and additional information at: http://h18000.www1.hp.com/products/quickspecs/12729_div/12729_div.html (Worldwide)	BS580B
	HP D2200sb Storage Blade **NOTE:** Please see the HP D2200sb PCIe Storage Blade QuickSpecs for technical specifications and additional information at: http://h18006.www1.hp.com/storage/bladesystem/index.html.	AP880A
HP Expansion Blade	HP BLc PCI Expansion Blade **NOTE:** Ships with one pre-installed PCI-X connect board. Also includes one PCIe connect board which requires installation. **NOTE:** Please see the QuickSpecs Technical Specifications and additional configuration information at: http://h18000.www1.hp.com/products/quickspecs/12753_div/12753_div.html (Worldwide)	448018-B21

Additional Options

HP USB and SD Options	HP USB 2-Button Optical Scroll Mouse	DC172B
	HP USB Standard Keyboard	DT528A#ABA
	HP 2GB USB Flash Media Drive Key Kit **NOTE:** HP qualified blank USB key for use with HP ProLiant servers that support the VMware virtualization environment. HP recommends this industry standard USB flash device for use with VMware ESXi. USB device must be installed in the internal slot of the ProLiant server for use with VMware ESXi. Refer to HP VMware Getting Started Guide for installation instructions.	608447-B21
	HP 4GB Micro SDHC Flash Media Kit	647444-B21
HP Care Pack Services	**Proactive Care** - Collaborative Support plus Proactive services delivered by the on shore/near shore Advanced Solution Center (ASC) and backed by the global delivery organization, end-to-end case ownership from a Technical Solution Specialists and Technical Account Manager who remotely delivers firmware/software revision management, proactive scans and incident trend reports. Recommended for customers running a virtualized infrastructure and/or customers who desire an enhanced call support experience.	
	HP 3 year 4 hour 24x7 ProLiant BL4xxc Proactive Care Service	U3B14E
	HP 3 year 4 hour 24x7 with Defective Media Retention ProLiant BL4xxc Proactive Care Service	U3B17E
	HP 3 year 6 hour Call To Repair 24x7 ProLiant BL4xxc Proactive Care Service	U3B20E
	HP 3 year 6hr Call To Repair 24x7 with Defective Media Retention ProLiant BL4xxc Proactive Care SVC	U3B23E
	Proactive Care Personalized Support Environmental Option - to add an onsite Account Support Manager (ASM) to Proactive Care. ASM is an assigned resource who delivers support planning and brings technical expertise and best practices advice for the customer's environment.	
	HP 3yr Provides annual personalized proactive supp for existing Proactive Care ISS centric environmt	U6W98E
	Installation Services - reduce the time required to get your system up and running and help minimize disruptions to your business.	
	HP Install c-Class Server Blade Service	UE493E
	HP Installation during Non Standard Hours c-Class Server Blade Service	UG869E
	Additional HP Care Pack services can be found at: http://www.hp.com/go/cpc	

Memory

NOTE: Memory configurations listed do not apply to "Factory Integrated Models".

DDR3 Memory Population Guidelines

For detailed memory configuration rules and guidelines, please use the Online DDR3 Memory Configuration Tool:
www.hp.com/go/ddr3memory-configurator

Some DIMM installation guidelines are summarized below:

- For the HP ProLiant BL465c G7 server blade with sixteen (16) memory slots:
  - There are four (4) channels per processor; eight (8) channels per server
  - There are two (2) DIMM slots for each memory channel; sixteen (16) total slots.
  - Memory channel 1 consists of the two (2) DIMMs that are furthest from the processor
  - Memory channel 4 consists of the two (2) DIMMs that are closest from the processor
- A minimum of two (2) DIMMs per processor are required
- DIMM slots that are white should be populated first
- Do not mix Unbuffered memory (UDIMMs) with Registered memory (RDIMMs)
- Do not install DIMMs if the corresponding processor is not installed
- If only one (1) processor is installed in a two (2) CPU system, only half of the DIMM slots are available
- To maximize performance, balance the total memory capacity between all installed processors
- To maximize performance, balance the total memory capacity on any given processor across the memory channels
- You may only have up to eight (8) ranks installed per channel
- You may install up to two (2) quad-rank DIMMs per channel
- If mixing DIMM voltage is a requirement, please note that the DIMMs will run at 1.5V since all 1.35V are capable of supporting 1.5V operations
- When running virtualization software, a minimum of two (2) DIMMs per processor are required. Populate DIMM sockets 1A and 5B for each processor socket populated.

DIMM slot/capacity/populated speed table

DIMM Type	Registered DIMMS (RDIMMs)									Unbuffered with ECC DIMMs (UDIMMs)	
DIMM Rank	Single Rank (1R)			Dual Rank (2R)				Quad Rank (4R)		Dual Rank (2R)	
DIMM Capacity	4GB	4GB	8GB	2GB	8GB	16GB	16GB	16GB	32GB	2GB	4GB
DIMM Native Speed (MHz)	1333	1600	1600	1333	1333	1333	1600	1066	1066	1333	1333
DIMM Voltage	LV/Std	Std	Std	Std	LV/Std	LV/Std	Std	Std	LV/Std	Std	Std
SLOTS THAT CAN BE POPULATED											
16 slot servers	16	16	16	16	16	16	16	16	16	16	16
MAXIMUM CAPACITY (GB)*											
16 slot servers	64	64	128	32	128	256	256	256	512	32	64
POPULATED DIMM SPEED (MHz)											
1 DIMM Per Channel	1333	1600	1600	1333	1333	1333	1600	1066	1066	1333	1333
2 DIMM Per Channel	1333	1600	1600	1333	1333	1333	1600	1066	1066/800**	1333	1333

*Maximum capacity will vary based on individual server platform.
** 3DPC: LV runs at 800/Std voltage runs at 1066

NOTES:

- PC3-10600 DIMMs have a maximum speed of 1333MHz. PC3-8500 DIMMs have a maximum speed of 1066MHz.
- If you do mix DIMM speeds, the memory bus will default to the minimum clock rate of all DIMMs in the system - even if the slower DIMM is on the other processor

Memory

- If you install 1x 1066MHz DIMM in channel 1 and 1x 1333MHz DIMM in channel 2, the maximum speed will be 1066MHz
- If you install 1x 1066MHz DIMM in channel 1 and 7x 1333MHz DIMMs with 1 DIMM Per Channel (DPC) in each of the other channels the maximum speed will be 1066MHz
- References to the above MHz speeds are for the various speeds of DDR3 DIMMs; 1333 refers to DDR3-1333, etc.

HP ProLiant BL465 G7 Server Blade DIMM slot and configuration diagrams

Basic memory slot and population diagram

- Population order; start with "A" first, "B" second, "C" third, etc.

16 DIMM SLOTS (8 per CPU node)					
	CPU1		CPU2		
	slot #	population order	slot #	population order	
Chnl 1	1	A	1	A	Chnl 1
	2	E	2	E	
Chnl 2	3	C	3	C	Chnl 2
	4	G	4	G	
Chnl 3	5	B	5	B	Chnl 3
	6	F	6	F	
Chnl 4	7	D	7	D	Chnl 4
	8	H	8	H	

HP ProLiant BL465c G7 Server Blade (1P Model)

Standard memory configuration (1 CPU model)

- 8GB, consisting of two (2) 4GB single-rank PC3-10600 RDIMMs

	CPU1		CPU2		
	slot #	population order	slot #	population order	
Chnl 1	1	A: 4GB DIMM	1	A: empty	Chnl 1
	2	E: empty	2	E: empty	
Chnl 2	3	C: empty	3	C: empty	Chnl 2
	4	G: empty	4	G: empty	
Chnl 3	5	B: 4GB DIMM	5	B: empty	Chnl 3
	6	F: empty	6	F: empty	
Chnl 4	7	D: empty	7	D: empty	Chnl 4
	8	H: empty	8	H: empty	

Memory

Standard Memory Plus Optional Memory (1 CPU model)

- 104GB, consisting of two (2) 4GB RDIMMs plus six (6) 16GB RDIMMs
  - 2 x 4GB single-rank PC3-10600 RDIMMs
  - 6 x 16GB quad-rank PC3-8500 RDIMMs

	CPU1		CPU2		
	slot #	population order	slot #	population order	
Chnl 1	1	A: 4GB DIMM	1	A: empty	Chnl 1
	2	E: 16GB DIMM	2	E: empty	
Chnl 2	3	C: 16GB DIMM	3	C: empty	Chnl 2
	4	G: 16GB DIMM	4	G: empty	
Chnl 3	5	B: 4GB DIMM	5	B: empty	Chnl 3
	6	F: 16GB DIMM	6	F: empty	
Chnl 4	7	D: 16GB DIMM	7	D: empty	Chnl 4
	8	H: 16GB DIMM	8	H: empty	

Standard Memory Replaced with Optional Memory (1 CPU model)

- 128GB, consisting of eight (8) 16GB quad-rank PC3-8500 RDIMMs

	CPU1		CPU2		
	slot #	population order	slot #	population order	
Chnl 1	1	A: 16GB DIMM	1	A: empty	Chnl 1
	2	E: 16GB DIMM	2	E: empty	
Chnl 2	3	C: 16GB DIMM	3	C: empty	Chnl 2
	4	G: 16GB DIMM	4	G: empty	
Chnl 3	5	B: 16GB DIMM	5	B: empty	Chnl 3
	6	F: 16GB DIMM	6	F: empty	
Chnl 4	7	D: 16GB DIMM	7	D: empty	Chnl 4
	8	H: 16GB DIMM	8	H: empty	

UDIMM maximum configuration (1 CPU model)

- 32GB, consisting of eight (8) 4GB dual-rank PC3-10600 UDIMMs

Memory

	CPU1		CPU2		
	slot #	population order	slot #	population order	
Chnl 1	1	A: 4GB DIMM	1	A: empty	Chnl 1
	2	E: 4GB DIMM	2	E: empty	
Chnl 2	3	C: 4GB DIMM	3	C: empty	Chnl 2
	4	G: 4GB DIMM	4	G: empty	
Chnl 3	5	B: 4GB DIMM	5	B: empty	Chnl 3
	6	F: 4GB DIMM	6	F: empty	
Chnl 4	7	D: 4GB DIMM	7	D: empty	Chnl 4
	8	H: 4GB DIMM	8	H: empty	

Standard Memory Replaced with Optional Memory (2 CPU Model)
RDIMM maximum configuration

- 512GB, consisting of sixteen (16) 32GB quad-rank PC3L-8500 RDIMMs

	CPU1		CPU2		
	slot #	population order	slot #	population order	
Chnl 1	1	A: 32GB DIMM	1	A: 32GB DIMM	Chnl 1
	2	E: 32GB DIMM	2	E: 32GB DIMM	
Chnl 2	3	C: 32GB DIMM	3	C: 32GB DIMM	Chnl 2
	4	G: 32GB DIMM	4	G: 32GB DIMM	
Chnl 3	5	B: 32GB DIMM	5	B: 32GB DIMM	Chnl 3
	6	F: 32GB DIMM	6	F: 32GB DIMM	
Chnl 4	7	D: 32GB DIMM	7	D: 32GB DIMM	Chnl 4
	8	H: 32GB DIMM	8	H: 32GB DIMM	

UDIMM maximum configuration (2 CPU model)

- 64GB, consisting of sixteen (16) 4GB dual-rank PC3-10600 UDIMMs

Memory

	CPU1		CPU2		
	slot #	population order	slot #	population order	
Chnl 1	1	A: 4GB DIMM	1	A: 4GB DIMM	Chnl 1
	2	E: 4GB DIMM	2	E: 4GB DIMM	
Chnl 2	3	C: 4GB DIMM	3	C: 4GB DIMM	Chnl 2
	4	G: 4GB DIMM	4	G: 4GB DIMM	
Chnl 3	5	B: 4GB DIMM	5	B: 4GB DIMM	Chnl 3
	6	F: 4GB DIMM	6	F: 4GB DIMM	
Chnl 4	7	D: 4GB DIMM	7	D: 4GB DIMM	Chnl 4
	8	H: 4GB DIMM	8	H: 4GB DIMM	

NOTE: Capacity references are rounded to the common Gigabyte values.

- 2GB = 2048MB
- 4GB = 4096MB
- 8GB = 8192MB
- 16GB = 16384MB

HP Memory

Registered DIMMs (RDIMMs)

HP 2GB (1x2GB) Dual Rank x8 PC3-10600 (DDR3-1333) Registered CAS-9 Memory Kit	593907-B21
HP 4GB (1x4GB) Single Rank x4 PC3-12800 (DDR3-1600) Registered CAS-11 Memory Kit	676331-B21
HP 4GB (1x4GB) Single Rank x4 PC3-10600 (DDR3-1333) Registered CAS-9 Memory Kit	593911-B21
HP 4GB (1x4GB) Single Rank x4 PC3L-10600 (DDR3-1333) Registered CAS-9 Low Power Memory Kit	604500-B21
HP 8GB (1x8GB) Single Rank x4 PC3-12800 (DDR3-1600) Registered CAS-11 Memory Kit	676333-B21
HP 8GB (1x8GB) Dual Rank x4 PC3-10600 (DDR3-1333) Registered CAS-9 Memory Kit	593913-B21
HP 8GB (1x8GB) Dual Rank x4 PC3L-10600 (DDR3-1333) Registered CAS-9 Low Power Memory Kit	604502-B21
HP 16GB (1x16GB) Quad Rank x4 PC3-8500 (DDR3-1066) Registered CAS-7 Memory Kit	593915-B21
HP 16GB (1x16GB) Dual Rank x4 PC3L-10600 (DDR3-1333) Registered CAS-9 LP Memory Kit	627808-B21
HP 16GB (1x16GB) Dual Rank x4 PC3-12800R (DDR3-1600) Registered CAS-11 Memory Kit	684066-B21
HP 32GB (1x32GB) Quad Rank x4 PC3L-8500 (DDR3-1066) Registered CAS-7 LP Memory Kit	627810-B21

Unbuffered with ECC DIMMs (UDIMMs)

HP 2GB (1x2GB) Dual Rank x8 PC3-10600 (DDR3-1333) Unbuffered CAS-9 Memory Kit	593921-B21
HP 4GB (1x4GB) Dual Rank x8 PC3-10600 (DDR3-1333) Unbuffered CAS-9 Memory Kit	593923-B21

NOTE: All DDR3 memory option kits consist of one DIMM per kit. For detailed memory configuration rules and guidelines, please use the Online DDR3 Memory Configuration Tool: www.hp.com/go/ddr3memory-configurator

Memory

NOTE: A minimum of two (2) DIMMs per processor are required.

NOTE: Kits described as PC3L include Low Voltage DIMMs. For more information on ProLiant Energy Efficient Features, see: www.hp.com/go/proliant-energy-efficient.

NOTE: Each processor memory bus will operate at up to 1600 MHz with two single-rank or dual-rank (SR/DR) DIMMs per processor memory channel, up to 1333 MHz with either one quad-rank (QR) or two single-rank/dual-rank (SR/DR) DIMMs per processor memory channel, and 1066 MHz with up to two QR or one QR and one SR/DR DIMMs per processor memory channel with standard voltage (1.5V, PC3) DIMMs. Memory bus will operate one speed slower when low voltage (1.35V, PC3L) memory is installed. Memory bus speeds may be further limited by the speed of the memory used as well.

Storage

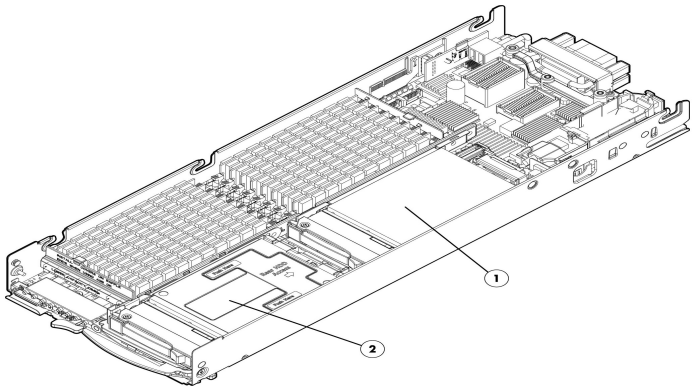

1-2 2 x SFF SAS or SATA Hot Plug Hard Drives, or
2 x SFF SATA Hot Plug SSD Drives

Hard Drives

NOTE: The components of a storage subsystem (e.g. the drive, the HBA/controller, firmware, and the server backplane) should operate at the same data transfer rate or the system bandwidth will be negotiated down to an acceptable level for all components.

NOTE: Simultaneous operation of hot plug hard drives and solid state drives is not supported.

NOTE: Hard drives have either a one year or three year warranty; refer to the specific hard drive QuickSpecs for details.

NOTE: SAS, SATA, and/or SSD drives cannot be mixed within the server.

SAS Hot Plug SFF (2.5-inch) Enterprise (ENT) Drives

	Quantity Supported	Position Supported	Controller
900GB 6G SAS 10K 600GB 6G SAS 10K 450GB 6G SAS 10K 300GB 6G SAS 15K 300GB 6G SAS 10K 146GB 6G SAS 15K	2	1-2	Smart Array P410i Controller

SAS Hot Plug SFF (2.5-inch) Midline (MDL) Drives

	Quantity Supported	Position Supported	Controller
1TB 6G SAS 7.2K 500GB 6G SAS 7.2K	2	1-2	Smart Array P410i Controller

SATA Hot Plug SFF (2.5-inch) Midline (MDL) Drives

	Quantity Supported	Position Supported	Controller
1TB 3G SATA 7.2K 500GB 3G SATA 7.2K	2	1-2	Smart Array P410i Controller

6G SAS Hot Plug Enterprise Performance Solid State Drives

Storage

	Quantity Supported	Position Supported	Controller
400GB 6G SAS SLC SFF 200GB 6G SAS SLC SFF	2	1-2	Smart Array P410i Controller

6G SAS ME Hot Plug SFF (2.5-inch) Enterprise Mainstream Solid State Drives

	Quantity Supported	Position Supported	Controller
800GB 6G SAS ME 400GB 6G SAS ME 200GB 6G SAS ME	2	1-2	Smart Array P410i Controller

SATA Hot Plug 2.5" Enterprise Mainstream Solid State Drives

	Quantity Supported	Position Supported	Controller
400GB 3G SATA MLC SFF 200GB 3G SATA MLC SFF 100GB 3G SATA MLC SFF	2	1-2	Smart Array P410i Controller

Technical Specifications

System Unit	**Dimensions** (H x W x D)	7.154 x 2.19 x 20.058 in (18.17 x 5.56 x 50.95 cm)	
	Weight (approximate)	Maximum (all hard drives, DIMMs, and processors installed)	13.9 lb (6.3 kg)
		Minimum (no hard drives, two DIMMs, and one processor installed)	9.8 lb (4.45 kg)
	Power Specifications	For power specifications including Input Requirements, BTU Rating, and Power Supply Output, please see the HP BladeSystem c-Class Enclosures QuickSpecs located at URL: HP BladeSystem c3000 Enclosure QuickSpecs: http://h18000.www1.hp.com/products/quickspecs/12790_div/12790_div.html HP BladeSystem c7000 Enclosure QuickSpecs: http://h18000.www1.hp.com/products/quickspecs/12810_div/12810_div.html To review typical system power ratings use the HP Power Advisor which is available via the online tool located at: www.hp.com/go/hppoweradvisor **NOTE:** For optimal cooling and system performance the BL465c G7 requires the c7000 enclosure to be configured with 10 fans and the c3000 enclosure to be configured with 6 fans.	
	System Inlet Temperature	Operating	10° to 35°C (50° to 95°F) at sea level with an altitude derating of 1.0°C per every 305 m (1.8°F per every 1000 ft) above sea level to a maximum of 3050 m (10,000 ft), no direct sustained sunlight. Maximum rate of change is 10°C/hr (18°F/hr). The upper limit may be limited by the type and number of options installed. System performance may be reduced if operating with a fan fault, or above 30°C (86°F).
		Non-operating	-30° to 60°C (-22° to 140°F). Maximum rate of change is 20°C/hr (36°F/hr).
	Relative Humidity (non-condensing)	Operating	10 to 90% relative humidity (Rh), 28°C (82.4°F) maximum wet bulb temperature, non-condensing.
		Non-operating	5 to 95% relative humidity (Rh), 38.7°C (101.7°F) maximum wet bulb temperature, non-condensing.
	Altitude	Operating	3050 m (10,000 ft). This value may be limited by the type and number of options installed.
		Non-operating	Maximum allowable altitude change rate is 457 m/min (1500 ft/min).
	Acoustic Noise	For acoustic noise specifications, please see the HP BladeSystem c-Class Enclosures QuickSpecs located at URL:	

		HP BladeSystem c3000 Enclosure QuickSpecs: http://h18000.www1.hp.com/products/quickspecs/12790_div/12790_div.html HP BladeSystem c7000 Enclosure QuickSpecs: http://h18000.www1.hp.com/products/quickspecs/12810_div/12810_div.html
HP Smart Array P410i Controller	**Disk Drive and Enclosure Interface**	6G SAS (Serial Attached SCSI) 3.0 G SATA (Serial Advanced Technology Attachment)
	SAS Connectors	2 internal (SFF8484) x4 wide port connectors
	Cache Memory Speed	DDR2-533MHz with 40 or 72-bit wide bus provides up to 4.2 GB/s maximum bandwidth.
	Server Interface	x4 5G PCIe Gen2 provides 2 GB/s maximum bandwidth.
	SAS Speed	x2 6G SAS provides 1.2 GB/s maximum bandwidth.
	Cache Memory	72-bit 1GB cache; ECC protection, capacitor-backed
	Logical Drives Supported	Up to 32 logical drives
	Maximum Logical Drive Capacity	2 TB (2 x 1 TB)
	Host Memory Addressing	64-bit, supporting greater than 4 GB server memory space
	RAID Support	RAID 1 (Mirroring) RAID 0 (Striping)
	Upgradeable Firmware	Upgradeable Firmware with recovery ROM feature
Integrated HP NC551i Dual Port FlexFabric 10Gb Converged Network Adapter	**Type**	Integrated dual-port KR 10GbE with FlexFabric (FCoE or iSCSI) capability
	Network Processor	Blade Engines 2 (BE2)
	Data Transfer Method	x8 PCI Express 2.0
	Network Transfer Rate	Two ports, each at 20 Gbps full duplex; 40 Gbps aggregate full duplex theoretical bandwidth **NOTE:** Each port is autosensing 1 Gb / 10 Gb, and can interoperate with 1 Gb HP BladeSystem c-Class interconnect components. Both ports will operate at the same speed. **NOTE:** Each port on the NC551i adapter transmits from the server at 20 Gbps (theoretical) full duplex.
	IEEE Compliance	802.1p QoS, 802.1Q VLAN tagging, 802.3ad link aggregation, 802.3ap 10GBase-KR, and 802.3x flow control
	Standard Features	• ProLiant Teaming including Network Fault Tolerance, Transmit Load Balancing, and Switch-Assisted Load Balancing • 9K Jumbo frames (4K Jumbo frames when in FCoE mode) • Microsoft Windows Receive Side Scaling (RSS) • Accelerated FCoE or iSCSI
HP Integrated Lights-Out	**Architecture**	PCI Express based health and remote management ASIC

Technical Specifications

3 (iLO 3) integrated on system board	**Processor**	PCI Express RISC processor core running at 250MHz
	Upgradeability	Option firmware upgradeable via Flash ROM
	Video Support	1600 x 1200 DVR max resolution
	Interfaces	One Ethernet network connection (10/100Mb/s)
	Memory	128-MB DDR with ECC
	Operating System Support	Microsoft Windows 2008 R2
		Microsoft Windows 2008 (32 bit and 64 bit)
		Microsoft Windows Server 2008 Standard Edition (32bit and 64bit)
		Microsoft Windows Server 2008 Enterprise Edition (32bit and 64bit)
		Microsoft Windows Server 2003 and Windows Server 2003 R2, and Windows Server 2003 for Extended Systems Standard Edition, Enterprise Edition
		Red Hat Enterprise Linux 5.4 (32 bit and 64 bit)
		SUSE LINUX Enterprise Server 11 (32bit and 64bit)
		SUSE LINUX Enterprise Server 10 (32bit and 64bit)
		VMware ESX 4.0
		VMware ESX 3.5.0
	Client System Support	Microsoft Windows 7
		Microsoft Windows XP Professional Edition
		Microsoft Windows Vista Business and Ultimate Editions
		Red Hat Enterprise Desktop 5.00
		SUSE Linux Enterprise Desktop 11
		SUSE Linux Enterprise Desktop 10
	Client Browser Support	Microsoft Internet Explorer 8
		Microsoft Internet Explorer 7
		Microsoft Internet Explorer 6
		Firefox 3.5 (on supported Windows and Linux systems)
		Firefox 3.0 (on supported Windows and Linux systems)
	Command Line Support	Secure Shell and serial port access
		Secure Socket Layer
		Secure Shell version 2
	Security	Advanced Encryption Standard (AES) and Triple Data Encryption Standard (3DES) on browser, CLP and XML scripting interface
		AES encryption of video
		RC4 encryption of video
	Directory Support Services	Active Directory v1.0 (Windows 2003)
	Driver Support	HP ProLiant iLO3 Management Controller Driver Package
	Management protocols supported	SNMP, IPMI 2.0 (system and LAN interface), DMTF Systems Management Architecture for Server Hardware Command Line Protocol (SMASH CLP), HP RIBCL XML

Technical Specifications

Environment-friendly Products and Approach	**End-of-life Management and Recycling**	Hewlett-Packard offers end-of-life HP product return, trade-in, and recycling programs in many geographic areas. For trade-in information, please go to: http://www.hp.com/go/green. To recycle your product, please go to: http://www.hp.com/go/green or contact your nearest HP sales office. Products returned to HP will be recycled, recovered or disposed of in a responsible manner. The EU WEEE directive (2002/95/EC) requires manufacturers to provide treatment information for each product type for use by treatment facilities. This information (product disassembly instructions) is posted on the Hewlett Packard web site at: http://www.hp.com/go/green. These instructions may be used by recyclers and other WEEE treatment facilities as well as HP OEM customers who integrate and re-sell HP equipment.

© Copyright 2012 Hewlett-Packard Development Company, L.P.

The information contained herein is subject to change without notice.

Microsoft and Windows NT are US registered trademarks of Microsoft Corporation.
AMD is a US registered trademark of AMD Corporation.

The only warranties for HP products and services are set forth in the express warranty statements accompanying such products and services. Nothing herein should be construed as constituting an additional warranty. HP shall not be liable for technical or editorial errors or omissions contained herein.

For hard drives, 1GB = 1 billion bytes. Actual formatted capacity is less.