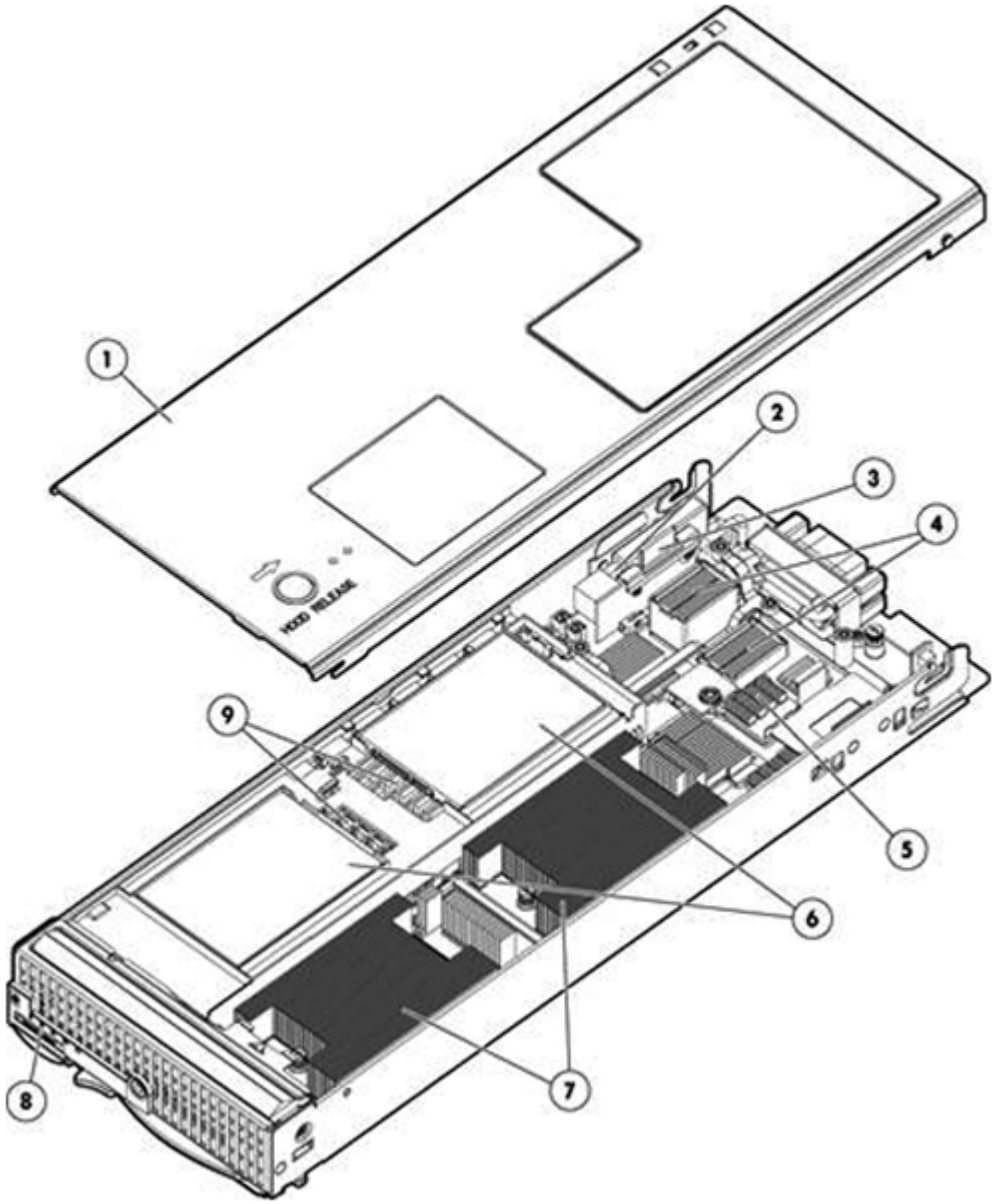

HP ProLiant BL490c G6 Server Blade

1. Access Panel
2. Internal USB connector
3. Internal SD card slot
6. Two (2) SATA Solid State Drive (SSD) bays
7. Up to two (2) Intel® Xeon® 5600 or 5500 series processors
8. Local I/O connector

4. Two (2) mezzanine I/O expansion slots
5. Embedded Dual Port Flex-10 10GbE Multifunction Server Adapter
9. Eighteen (18) DDR3 Registered or Unbuffered DIMM Memory Slots

What's New

- Support for HP NC553m 10Gb 2-port FlexFabric Adapter

At A Glance

The HP ProLiant BL490c Virtualization Blade raises the bar for memory capacity and I/O bandwidth in a half-height blade. Coupling up to 2 Intel® Xeon® processors with 18 DIMM slots and support for up to 24 NICs, the BL490c gives enterprise data center managers the ideal server platform for hosting virtual machines.

This document covers the HP ProLiant BL490c G6 server blade only. For more information on HP BladeSystems c-Class Enclosure and HP BladeSystem c-Class Interconnect and Mezzanine Components, please see the following:

HP BladeSystem c3000 Enclosure QuickSpecs:
http://h18000.www1.hp.com/products/quickspecs/12790_div/12790_div.html
HP BladeSystem c7000 Enclosure QuickSpecs:
http://h18000.www1.hp.com/products/quickspecs/12810_div/12810_div.html
HP BladeSystem c-Class Interconnect and Mezzanine Components:
http://h18004.www1.hp.com/products/blades/components/c-class-interconnects.html
http://h18004.www1.hp.com/products/blades/components/c-class-adapters.html

The HP ProLiant BL490c G6 is a 2-processor server blade optimized for virtualization with high memory capacity and high bandwidth and flexible networking.

HP ProLiant BL490c G6 server blade includes:

- Processor:
  - Up to two (2) Intel® Xeon® 5500 or 5600 Series processors, up to 2.93GHz
  - Intel® 5500 Chipset
- Memory:
  - Eighteen (18) DIMM slots
  - Up to 192GB, using PC3-8500R DDR3 Registered (RDIMM) memory, operating at 800MHz when fully populated at 2 DIMMs per Channel in 12 slots
  - Up to 48GB, using PC3-10600E DDR3 Unbuffered (UDIMM) memory, operating at 1066MHz when fully populated at 2 DIMMs per Channel in 12 slots
- Storage Controller:
  - HP Integrated SATA Controller
    NOTE: RAID functionality requires the use of an optional Smart Array mezzanine card. See the Storage Controller options section below.
- Internal Drive Support:
  - Up to two (2) non-hot plug SATA Solid State Drives (SSD)
  - With an attached SB40c Storage Blade, up to six (6) hot plug SFF Serial Attached SCSI (SAS) or SATA Hard Drives (optional)
- Network Controller:
  - Embedded NC532i Dual Port Flex-10 10GbE Multifunction Server Adapter
    NOTE: Flex-10 capability requires the use of an HP Virtual Connect Flex-10 10Gb Ethernet module. Learn more at: www.hp.com/go/virtualconnect.

Overview

NOTE: Each port is autosensing 1 Gb/ 10Gb, and can interoperate with 1Gb HP BladeSystem c-Class interconnect components.

- One (1) additional 10/100 server adapter dedicated to iLO 2 Management

- Mezzanine Support:
  - Two (2) I/O expansion mezzanine slots
  - Supports up to two (2) mezzanine cards
    - Dual-Port FlexFabric Adapter mezzanine option
    - Dual-Port Fibre Channel Mezzanine options for SAN connectivity (Choice of Emulex ,QLogic or Brocade)
    - iSCSI Ethernet mezzanine option for optimized iSCSI connectivity
    - Ethernet server adapter mezzanine options for additional network ports
    - 4X QDR (40Gbps) and DDR (20Gbps) InfiniBand (IB) Mezzanine options for low latency and high bandwidth server interconnectivity
    - Storage Controller mezzanine options for additional internal and external storage connectivity
    - I/O Accelerator mezzanine options for high transaction rate local storage
    - SAS mezzanine option for external direct attach and shared SAS storage
- Internal USB Support:
  - One (1) internal USB 2.0 connector for security key devices and USB drive keys
  - One (1) internal SD-HC Card slot
- Trusted Platform Module:
  - One (1) internal TPM 1.2 module connector
- Form Factor:
  - HP ProLiant BL490c G6 is a half-height server blade that plugs into the HP BladeSystem c3000 and c7000 enclosures
- Infrastructure Management:
  - This server blade requires the latest version of the Onboard Administrator firmware. This firmware release may also require other subsystem firmware upgrades. For information on the latest firmware versions, please see the Blades Firmware Maintenance website at: http://h18004.www1.hp.com/products/blades/components/c-class-compmatrix.html
  - HP Integrated Lights-Out 2 (iLO 2) management processor for simplified server setup, health monitoring and recovery, power and thermal control, and lights-out remote administration.
  - HP Insight Control, a product option, delivers essential infrastructure management that can help save time and money by making it easy to deploy, migrate, monitor, control and optimize your IT infrastructure through a single, simple management console. Insight Control supports both Windows and Linux-based central management servers.
  - HP Insight Dynamics for ProLiant, a product option, is an integrated command center that enables IT Staff personnel to continuously analyze and optimize a converged infrastructure, while automating and reducing the cost of common data center tasks by as much as 40 percent. This ultimately enables them to dynamically keep pace with the organization's changing business requirements
- Operating Systems:
  - Supports Windows, RHEL, SLES, Solaris, VMware, and Citrix XenServer
- Enclosures:
  - HP offers three different c-Class server blade enclosures to meet your individual needs:
    - The HP BladeSystem c7000 rack enclosure is 10U high and holds up to 16 ProLiant BL490c G6 servers plugged vertically.
    - The HP BladeSystem c3000 rack enclosure is 6U high and holds up to 8 HP ProLiant BL490c G6 servers plugged horizontally.
  - Server blades, storage blades, interconnect modules, power supplies, fans, and redundant Onboard Administrator modules are all designed to fit into the c3000 and c7000 enclosures.
- For additional enclosure information, please see: http://h18004.www1.hp.com/products/blades/components/enclosures/c-class/index.html.
- Warranty:
  - This product is covered by a global limited warranty and supported by HP Services and a worldwide network of HP Authorized Channel Partners. Hardware diagnostic support and repair is available for three years from date of purchase. Support for software and initial setup is available for 90 days from date of purchase. Enhancements to

warranty services are available through HP Care Pack services or customized service agreements. Certain restrictions and exclusions apply. Hard drives have either a one year or three year warranty; refer to specific hard drive QuickSpecs for details.

NOTE: Server warranty includes 3 year Parts, 3 year Labor, 3-year on-site support. Warranty repairs may be accomplished through the use of Customer Self Repair (CSR) parts. These parts fall into two categories: 1) Mandatory CSR parts are designed for easy replacement. A travel and labor charge will result when customers decline to replace a Mandatory CSR part; 2) Optional CSR parts are also designed for easy replacement but may involve added complexity. Customers may choose to have HP replace Optional CSR parts at no charge. Additional information regarding worldwide limited warranty and technical support is available at:
http://h18004.www1.hp.com/products/servers/platforms/warranty/index.html

Standard Features

NOTE: For the Standard Features shipped in the "Factory Integrated Models", please see the "Configuration Information - Factory Integrated Models" section.

Processor	Intel® Xeon® Processor X5670 (2.93 GHz, 12MB L3 Cache, 95W, DDR3-1333, HT, Turbo 2/2/2/2/3/3) Intel® Xeon® Processor X5650 (2.66 GHz, 12MB L3 Cache, 95W, DDR3-1333, HT, Turbo 2/2/2/2/3/3) Intel® Xeon® Processor X5570 (2.93 GHz, 8M L3 Cache, 95W, DDR3-1333, HT, Turbo 2/2/3/3) Intel® Xeon® Processor E5540 (2.53 GHz, 8M L3 Cache, 80W, DDR3-1066, HT, Turbo 1/1/2/2) Intel® Xeon® Processor L5530 (2.40 GHz, 8MB L3 cache, 60W, DDR3-1066, HT, Turbo 1/1/2/2) Intel® Xeon® Processor E5504 (2.00 GHz, 4M L3 Cache, 80W, DDR3-800) NOTE: HT indicates that the processor model supports Intel® Hyper-Threading Technology. NOTE: Turbo indicates the maximum potential frequency increment when using Intel® Turbo Boost Technology, with 4, 3, 2, and 1 cores active (on 5500 series processors), or with 6,5,4,3,2,1 cores active (on 5600 series processors). NOTE: DDR3 speed is the maximum memory speed of the processor. Actual memory speed may depend on the quantity and type of DIMMs installed. NOTE: For the Intel 5500 and 5600 Series, the letter preceding the model number indicates the performance/wattage of the processor. "X" denotes High Performance/Wattage; "E" denotes Enterprise Performance/Wattage (Mainstream); and "L" denotes Lower Wattage.
Upgradeability	Upgradeable to two (2) processors
Cache Memory	4MB shared L3 cache 8MB shared L3 cache 12MB shared L3 cache
Chipset	Intel® 5500 Chipset

Standard Features

Memory

Type	DDR3 Registered (RDIMM) or Unbuffered (UDIMM)
Standard	6 GB (3 x 2GB) RDIMM
Maximum (RDIMM)	192 GB (12 x 16 GB) for Registered Memory configurations
Maximum (UDIMM)	48 GB (12 x 4 GB) for Unbuffered Memory configurations

NOTE: Depending on the memory configuration and processor model the memory speed may run at 1333MHz, 1066MHz or 800MHz. Please see the Online Memory Configuration Tool for details; www.hp.com/go/ddr3memory-configurator

DDR3 memory options part number decoder

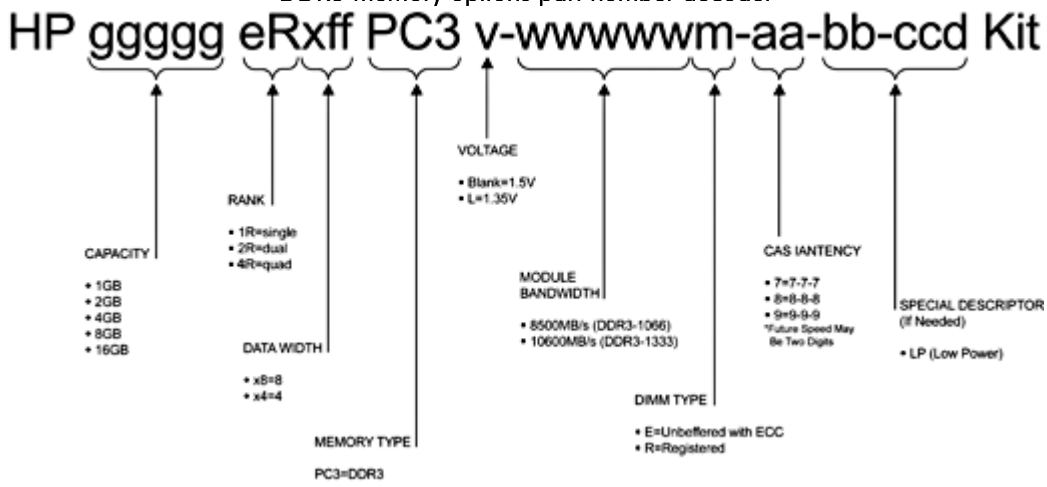

Network Controller

Embedded NC532i Dual Port Flex-10 10GbE Multifunction Server Adapter

NOTE: Flex-10 capability requires the use of an HP Virtual Connect Flex-10 10Gb Ethernet module. Learn more at: www.hp.com/go/virtualconnect.

NOTE: The iSCSI offload feature of the embedded multifunction adapter requires the HP Accelerated iSCSI Pack. For more information, please see the QuickSpecs at: http://h18000.www1.hp.com/products/quickspecs/12466_div/12466_div.html

One (1) additional 10/100 NIC dedicated to iLO 2 Management

I/O Expansion Slots

Two (2) I/O expansion mezzanine slots (x8 PCI Express)

Integrated Manageability

HP Integrated Lights-Out 2 (iLO 2) management processor

Storage Controller

HP Integrated SATA Controller

NOTE: RAID functionality requires the use of an optional Smart Array mezzanine card. See the Storage Controller options section below.

Standard Features

Maximum Internal Storage	Non-Hot Plug SATA SSD	128GB	2 x 64GB
	Hot Plug SFF SAS	1.8TB	6 x 300GB
	NOTE: Hot Plug SFF SAS maximum internal storage supported with optional SB40c Storage Blade attached.		
Graphics	Integrated ATI-RN50 with 32MB video memory		
Graphics Resolution Supported	Resolution Color Depths	1600 x 1200, 64K, 256, 16 1280 x 1024, 16.7M, 64k, 256, 16 1024 x 768, 16.7M, 64k, 256, 16 800 x 600, 16.7M, 64k, 256, 16 640 x 480, 16.7M, 64k, 256, 16 NOTE: Maximum resolution available via HP Integrated Lights-Out 2 (iLO 2) remote console is 1280 x 1024.	

Fibre Channel Support

Two (2) optional Fibre Channel HBAs are supported by the HP ProLiant BL490c G6. Both mezzanine circuit boards connect directly to the server blade system board. These Fibre Channel HBAs are available via option kits and must be ordered separately.

HBA mezzanine card option kits:

Emulex LPe1105 4Gb Fibre Channel Host Bus Adapter for c-Class BladeSystem (PN 403621-B21)

- Based on the same field-proven ASIC, firmware, and driver technology as Emulex's renowned LPe1150 HBA, the Emulex LPe1105-HP is fully driver compatible with all Emulex HBAs

Emulex LPe1205 8Gb Fibre Channel Host Bus Adapter for c-Class BladeSystem (PN 456972-B21)

- Exceptional performance, enhanced security, and scalable management for virtual server and enterprise-class applications

QLogic QMH2462 4Gb Fibre Channel Host Bus Adapter for c-Class BladeSystem (PN 403619-B21)

- Uses common drivers which means that customers can standardize on one QLogic driver whether they are using the QMH2462 or other HBAs powered by QLogic

QLogic QMH2562 8Gb Fibre Channel Host Bus Adapter for c-Class BladeSystem (PN 451871-B21)

- Provides a first step into the 8Gb future, advanced, embedded support for virtualized environments and reduced power consumption

HP BLc Brocade 804 8Gb Fibre Channel Host Bus Adapter (PN 590647-B21)

- Application oriented Quality of Service (AQoS) providing the ability to configure, prioritize, and optimize traffic flows from virtual machines and/or applications to the target port

Brocade, Emulex and QLogic Fibre Channel HBAs for HP BladeSystem c-Class feature:

- Optimal performance utilizing PCI Express
- 4/2/1Gb/s auto negotiating speeds (4Gb HBAs)

Standard Features

- 8/4/2Gb/s auto negotiation speeds (8Gb HBAs)
- Dual-ports for redundant path connections
- Up to two FC HBAs per server blade providing redundant FC HBA support
- Optimized for HP StorageWorks and supported by third party SAN vendors
- Support for Microsoft® Windows® and Linux operating system environments

Compatible SAN

HP ProLiant BL490c G6 server blades are optimized for HP StorageWorks MSA, EVA and XP

HP ProLiant BL490c G6 server blades are compatible with select 3rd party SANs (please see blade storage page for more details: http://h18004.www1.hp.com/products/blades/components/c-class-sans.html

HP Virtual Connect

HP Virtual Connect simplifies server connectivity to data and storage networks, and reduces costs. Unique HP Flex-10 and FlexFabric technologies make maximum use of network bandwidths, provide dynamic tuning and enable extreme flexibility to meet individual server and infrastructure requirements. HP Virtual Connect Enterprise Manager (VCEM) provides a central console to administer network connections and workloads for thousands of servers. For more information on Virtual Connect Ethernet, Fibre Channel, Converged Network and management options see: www.hp.com/go/virtualconnect

HP Insight management software

HP Insight Foundation

Managing the growing number of servers can be complex and expensive for your organization. IT managers need to address changing business needs with tools that meet the challenges of managing today's complex Datacenters.

HP provides management solutions that are designed to simplify a server's installation, configuration and maintenance throughout the entire server lifecycle. This provides the customer with higher levels of operational efficiency and highly reliable systems: http://www.hp.com/go/foundation.

The foundation pack includes:

- HP SmartStart
- HP Management DVD
- HP ProLiant Smart Update Firmware DVD
- SmartStart version supported (minimum): SmartStart 8.20 http://www.hp.com/servers/smartstart

NOTE: In an effort to support reducing our environmental impact, the HP Insight Foundation Suite for ProLiant media will be available as a selectable option for this server at time of order of a Factory Integrated Model. This will allow customers to order the number of media kits that best meet their needs and eliminate receiving unnecessary duplicate media.

HP Integrated Lights-Out 2

HP Integrated Lights-Out (iLO) simplifies server setup, health monitoring, power and thermal control, and lights-out remote administration of ProLiant ML, DL, and BL servers. HP iLO functions without additional software and can be accessed from any location via a web browser. HP iLO works hand-in-hand with HP Systems Insight Manager, Insight Control suites, and Insight Dynamics for ProLiant, helping customers unleash the value of the ProLiant platform and deliver the highest possible quality of IT service. For more

Standard Features

	information, visit: www.hp.com/go/iLO
HP Insight Control	HP Insight Control, a product option, delivers essential infrastructure management that can help save time and money by making it easy to deploy, migrate, monitor, remote control, and optimize your IT infrastructure through a single, simple management console. Two versions of Insight Control are available, to serve environments requiring either a Linux-based or a Windows-based central management server: HP Insight Control for Linux, and HP Insight Control. See www.hp.com/go/insightcontrol HP Insight Control includes one year of 24 x 7 HP Software Technical Support and Update Service ensuring rapid access to HP support staff and proactive delivery of software updates. For more information about this service, please visit: http://www.hp.com/services/insight.
HP Insight Dynamics for ProLiant	HP Insight Dynamics for ProLiant, a product option, is advanced infrastructure management software that enables IT staff to instantly adjust their environments to meet dynamic business demands by provisioning, optimizing and protecting complex infrastructure in minutes. It's a powerful toolkit, integrated-by-design, that accelerates complex technology projects and simplifies daily operations, transforming data center economics. With Insight Dynamics IT professionals can plan capacity and power continuously, balance workloads across physical and virtual resources, and ensure cost-effective high availability. It also enables IT organizations to provision infrastructure consistently and automatically from pools of shared resources using a self-service portal. Resources provisioned can range from a single virtual machine to complex multi-tier environments and their associated physical and virtual resource requirements. In addition to the previous functional benefits, it also provides a cost-effective disaster recovery for physical and virtual environments that works with HP StorageWorks Continuous Access software for both the Enterprise Virtual Array and the XP storage array allowing application environments to be reactivated in minutes with the touch of a button to a remote location. NOTE: For more information, visit: http://www.hp.com/go/insightdynamics

Standard Features

High Performance Clusters	HP Cluster Platforms	HP Cluster Platforms are specifically engineered, factory-integrated large-scale ProLiant clusters optimized for High Performance Computing, with a choice of servers, networks and software. Operating system options include specially priced offerings for Red Hat Enterprise Linux and Novell SLES, as well as Microsoft Windows HPC Server. A Cluster Platform Configurator simplifies ordering. http://www.hp.com/go/clusters
	HP HPC Interconnects	High Performance Computing (HPC) interconnect technologies are available for this server as part of the HP Cluster Platform portfolio. These high-speed InfiniBand and Gigabit interconnects are fully supported by HP when integrated within an HP cluster. Flexible, validated solutions can be defined with the help of configuration tools. http://www.hp.com/techservers/clusters/ucp/index.html
	HP Cluster Management Utility	HP Cluster Management Utility (CMU) is an HP-licensed and HP-supported suite of tools that are used to manage large-scale Linux ProLiant systems. CMU includes software for the centralized provisioning, management and monitoring of nodes. CMU makes the administration of clusters user friendly, efficient, and effective. http://www.hp.com/go/cmu
	HP HPC Linux Value Pack	HP HPC Linux Value Pack (Value Pack) is an HP-licensed and HP-supported specially priced software bundle for the development and deployment of applications on HPC Cluster Platforms. Value Pack includes the Platform LSF workload scheduler, the HP-MPI parallelization library, the HP Unified Parallel C compiler and the HP Shmem library, as well as the execution environments for the libraries and compiler. HP HPC Linux Value Pack

Operating Systems and Virtualization Software Support for ProLiant Servers

Microsoft Windows Server
Red Hat Enterprise Linux (RHEL)
SUSE Linux Enterprise Server (SLES)
Solaris
VMware
Citrix XenServer

NOTE: For more information on HP's Certified and Supported ProLiant Servers for OS and Virtualization Software and latest listing of software drivers available for your server, please visit our Support Matrix at: http://www.hp.com/go/ossupport and our driver download page http://www.hp.com/support/BL490cG6

Availability

- Dual-Port Fibre Channel Mezzanine Card for redundant SAN connection
- Dual-port embedded 10 Gigabit Ethernet adapters for redundant LAN connections
- Redundant ROM
- Advanced ECC Memory
- Support for Memory Mirroring and Memory Lock-Step Mode
- Network adapter teaming (network fault tolerance, transmit load balancing, switch-assisted load balancing)

Standard Features

Industry Standard Compliance	ACPI V2.0 Compliant PCI 2.2 Compliant WOL Support Microsoft® Logo certifications USB 2.0 Support
Security	• Power-on password • Administrator's password • Integrated Lights-Out 2 has 12 customizable user accounts and SSL encryption • Integrated Lights-Out 2 can be disabled via a Global Setting
Security - Trusted Platform Module	The TPM (Trusted Platform Module) is a microcontroller chip that can securely store artifacts used to authenticate the server platform. These artifacts can include passwords, certificates and encryption keys. Windows® BitLocker™ Drive Encryption (BitLocker) is a data protection feature available in Windows Server® 2008. BitLocker leverages the enhanced security capabilities of a Trusted Platform Module (TPM) version 1.2. The TPM works with BitLocker to help protect user data and to ensure that a server running Windows Server 2008 has not been tampered with while the system was offline. NOTE: For more information about TPM, including a white paper, go to: http://www.hp.com/go/TPM NOTE: ProLiant OS pre-installed units will come with the partition required for TPM deployment. NOTE: The TPM key is unique to every TPM deployed server and must be retained. Misplacing or losing the key could result in data loss.
Factory Express Portfolio for Servers and Storage	HP Factory Express offers configuration, customization, integration and deployment services for HP servers and storage products. Customers can choose how their factory solutions are built, tested, integrated, shipped and deployed. Factory Express offers service packages for simple configuration, racking, installation, complex configuration and design services as well as individual factory services, such as image loading, asset tagging, and custom packaging. HP products supported through Factory Express include a wide array of servers and storage: HP Integrity, HP ProLiant, HP ProLiant Server Blades, HP BladeSystem, HP 9000 servers as well as the MSAxxxx, VA7xxx, EVA, XP, rackable tape libraries and configurable network switches. For more information on Factory Express services on your specific server model please contact your sales representative or go to: http://www.hp.com/go/factory-express.
HP Enterprise Configurator	The HP eConfigure Enterprise Configurator now provides factory default racking for our HP hardware portfolio. This approach is aligned with our strategic direction to meet the needs and expectations of our valued customers. If you require "custom" rack configuration, please contact HP's Customer Business Center or an Authorized Partner for assistance. For additional information please visit: http://www.hp.com/products/configurator

Standard Features

Service and Support

HP Care Pack services provide total care and support expertise with committed response designed to meet your IT and business needs.

The HP Care Pack service for HP ProLiant BL c-Class server blades, cover the server blade and all HP branded hardware options qualified for the server, purchased at the same time or afterwards, internal to the server.

To fully capitalize on your HP BladeSystem servers' capabilities requires a service partner who thoroughly understands your server technology and systems environment. HP Services, an industry leader in provision of multi vender support solutions provides a range of support services designed to meet the varying needs of business. Whether an SMB or large global corporation HP has a HP BladeSystem server support offer to help you speedily deploy and maximize system uptime.

Recommended Service - Simplify ProLiant solution implementation, maintenance and management.

- Support Service - 4-Hour Response Coverage, 3-Year, 24 x 7, Same Business Day
- Deployment Service - Installation and Start Up for HP BladeSystem Infrastructure

Enhanced Service - Optimize service level to increase IT performance and availability

- Support Service - HP Proactive BladeSystem Service, 1-Year
- Deployment Service - Enhanced Network Installation and Start-up for HP BladeSystem Switches

Installation & Start-Up service for HP BladeSystem Infrastructure plus HP BladeSystem Enhanced Network Installation and Start-UP as per the Customer Description and/or Data Sheet. To be delivered on a scheduled basis 8am-5pm, M-F, excluding HP holidays.

For a complete listing of service offerings and information visit:
http://www.hp.com/services/bladesystemservices
http://h20219.www2.hp.com/services/us/en/warranty/carepack-servers-proliant.html

Models

HP ProLiant BL490c G6 X5650 2.66GHz (1P) 595825-B21	Processor(s) One of the following depending on model	One (1) Intel ® Xeon® Processor X5650 (2.66 GHz, 12MB L3 Cache, 95W, DDR3-1333, HT, Turbo 2/2/2/2/3/3) One (1) Intel® Xeon® Processor X5570 (2.93 GHz, 8MB L3 Cache, 95W, DDR3-1333, HT, Turbo, 2/2/3/3) One (1) Intel® Xeon® Processor E5540 (2.53 GHz, 8MB L3 Cache, 80W, DDR4-1066, HT Turbo, 1/1/2/2/) One (1) Intel® Xeon® Processor E5504 (2.00 GHz, 4MB L3 Cache, 80W, DDR3-800)
HP ProLiant BL490c G6 X5570 2.93GHz (1P) 509314-B21		
HP ProLiant BL490c G6 E5540 2.53GHz (1P) 509315-B21	Cache Memory One of the following depending on model	4MB Shared L3 Cache 8MB Shared L3 Cache 12MB Shared L3 Cache
HP ProLiant BL490c G6 E5504 2.0GHz (1P) 509316-B21	Memory	6 GB (3 x 2 GB) PC3-10600 (DDR3-1333) Registered DIMMs
	Network Adapter	Embedded NC532i Dual Port Flex-10 10GbE Multifunction Server Adapter and one (1) additional 10/100 server adapter dedicated to iLO 2 management
	Storage Controller	HP Integrated SATA Controller
	Hard Drives	No drives included
	Internal Storage	SSD: Up to 128GB (2 x 64GB) SATA
	Optical Drive	None
	Power Supply	None
	Form Factor	Up to eight (8) half-height blades supported in the HP BladeSystem c3000 Enclosure Up to sixteen (16) half-height blades supported in HP BladeSystem c7000 Enclosure

NOTE: This section lists some of the steps required to configure a Factory Integrated Model. To ensure only valid configurations are ordered, HP recommends the use of an HP approved configurator. Contact your local sales representative for information on CTO product offerings and requirements.
NOTE: HP does not allow factory integration of options into standard models listed above.
Configure-to-order server blades must start with a CTO Blade.
NOTE: FIO indicates that this option is a Factory Installable Option.

Step 1: Base Server Blade Configuration (Select a configurable Blade)

Models	HP ProLiant BL490c G6 Configure-to-order Server	498357-B21
	Configurable Model ships with:	
	Embedded NC532i Dual Port Flex-10 10GbE Multifunction Server Adapter and one (1) additional 10/100 server adapter dedicated to iLO 2 management	
	Integrated Lights-Out 2 Standard Blade Edition	

Step 2: Choose Required Options (one of the following from each list unless otherwise noted)

HP Processors	For single processor configuration choose:	
	Six-Core Processor Option Kits	
	HP BL490c G6 Intel® Xeon® X5670 (2.93GHz/6-core/95W/12MB) FIO Processor Kit	595826-L21
	NOTE: If two processors are desired, select one 595826-L21 and one 595826-B21.	
	HP BL490c G6 Intel® Xeon® X5650 (2.66GHz/6-core/95W/12MB) FIO Processor Kit	595827-L21
	NOTE: If two processors are desired, select one 595827-L21 and one 595827-B21.	
	Quad-Core Processor Option Kits	
	Intel® Xeon® X5570 2.93GHz Quad Core 95 Watts BL490c G6 Factory Integrated Processor Option Kit	509319-L21
	NOTE: If two processors are desired, select one 509319-L21 and one 509319-B21.	
	Intel® Xeon® E5540 2.53GHz Quad Core 80 Watts BL490c G6 Factory Integrated Processor Option Kit	509322-L21
	NOTE: If two processors are desired, select one 509322-L21 and one 509322-B21.	
	Intel® Xeon® L5530 2.40GHz Quad Core 60 Watts BL490c G6 Factory Integrated Processor Option Kit	576216-L21
	NOTE: If two processors are desired, select one 576216-L21 and one 576216-B21.	
	Intel® Xeon® E5504 2.0GHz Quad Core 80 Watts BL490c G6 Factory Integrated Processor Option Kit	509327-L21
	NOTE: If two processors are desired, select one 509327-L21 and one 509327-B21.	
HP Memory	Registered DIMMS (RDIMMs)	
	HP 2GB (1x2GB) Dual Rank x8 PC3-10600 (DDR3-1333) Registered CAS-9 Memory Kit	500656-B21
	HP 4GB (1x4GB) Dual Rank x4 PC3-10600 (DDR3-1333) Registered CAS-9 Memory Kit	500658-B21
	HP 4GB (1x4GB) Quad Rank x8 PC3-8500 (DDR3-1066) Registered CAS-7 Low Power Memory Kit	500660-B21
	HP 4GB (1x4GB) Single Rank x4 PC3-10600 (DDR3-1333) Registered CAS-9 Memory Kit	593339-B21

HP 4GB (1x4GB) Single Rank x4 PC3L-10600 (DDR3-1333) Registered CAS-9 Low Power Memory Kit	604504-B21
NOTE: Low Voltage DIMMs can only be used with Intel Xeon 5600 series processors.	
HP 8GB (1x8GB) Dual Rank x4 PC3-10600 (DDR3-1333) Registered CAS-9 Memory Kit	500662-B21
HP 8GB (1x8GB) Dual Rank x4 PC3-8500 (DDR3-1066) Registered CAS-7 Memory Kit	516423-B21
HP 8GB (1x8GB) Dual Rank x4 PC3L-10600 (DDR3-1333) Registered CAS-9 Low Power Memory Kit	604506-B21
NOTE: Low Voltage DIMMs can only be used with Intel Xeon 5600 series processors.	
HP 16GB (1x16GB) Quad Rank x4 PC3-8500 (DDR3-1066) Registered CAS-7 Memory Kit	500666-B21
Unbuffered with ECC DIMMs (UDIMMs)	
HP 1GB (1x1GB) Single Rank x8 PC3-10600 (DDR3-1333) Unbuffered CAS-9 Memory Kit	500668-B21
HP 2GB (1x2GB) Dual Rank x8 PC3-10600 (DDR3-1333) Unbuffered CAS-9 Memory Kit	500670-B21
HP 4GB (1x4GB) Dual Rank x8 PC3-10600 (DDR3-1333) Unbuffered CAS-9 Memory Kit	500672-B21
NOTE: All DDR3 memory option kits consist of one DIMM per kit. For detailed memory configuration rules and guidelines, please use the Online DDR3 Memory Configuration Tool: www.hp.com/go/ddr3memory-configurator.	
NOTE: Kits described as LP include Low Power DIMMs. For more information on ProLiant Energy Efficient Features, see: www.hp.com/go/proliant-energy-efficient.	
NOTE: PC3L is a low voltage memory.	

Step 3: Choose Additional Options for Factory Integration

NOTE: For additional options, please refer to the "Core Options" and "Additional Options" section below. For additional options, including server blade enclosures interconnect and mezzanine options and power subsystem options; please see the Core Options and Additional Options sections below; or the following:
HP BladeSystem c3000 Enclosure QuickSpecs:
http://h18000.www1.hp.com/products/quickspecs/12790_div/12790_div.html
HP BladeSystem c7000 Enclosure QuickSpecs:
http://h18000.www1.hp.com/products/quickspecs/12810_div/12810_div.html
and HP BladeSystem c-Class Interconnect and Mezzanine Components:
http://h18004.www1.hp.com/products/blades/components/c-class-interconnects.html
http://h18004.www1.hp.com/products/blades/components/c-class-adapters.html

Core Options

NOTE: Some options may not be available for factory integration. Please contact an HP sales representative for additional information.

HP Ethernet Mezzanine Options	Gigabit Ethernet Mezzanines	
	HP NC325m PCI Express Quad Port Gigabit Server Adapter NOTE: If the NC325m is installed in mezzanine slot 1 of a half-height server, connectivity will be provided on 2 of the 4 ports.	416585-B21
	HP NC326m PCI Express Dual Port 1Gb Server Adapter	406771-B21
	HP NC360m Dual Port 1GbE BL-c Adapter	445978-B21
	HP NC364m Quad Port 1GbE BL-c Adapter NOTE: If the NC364m is installed in mezzanine slot 1 of a half-height server, connectivity will be provided on only 2 of the 4 ports.	447883-B21
	HP NC382m PCI Express Dual Port Multifunction Gigabit Server Adapter	453246-B21
	QLogic iSCSI Dual Port Adapter with Virtual Connect for c-Class BladeSystem	488074-B22
	NOTE: The Gigabit Ethernet adapters above transmit from the server at 2000 Mbps, full duplex per port only. For more information, see the "Network Controller" segment in the Standards Features section.	
	10 Gigabit Ethernet Mezzanines	
	NOTE: A 10 Gigabit Ethernet adapter is required for each server blade connecting to a 10Gb interconnect in bays 3-8 (HP BladeSystem c7000 Enclosure) or bays 2-4 (HP BladeSystem c3000 Enclosure). NOTE: Each 10 Gigabit Ethernet adapter requires a minimum of 2GB of server memory. NOTE: Each 10 Gigabit Either adapter supports linking at 1000Mbps or 10000Mbps when not connected to a Flex-10 enabled module and will link with all current 1Gb switches at 1Gb. NOTE: The ROM Based Setup Utility (RBSU) feature allows for the configuring of a FlexFabric Adapter to any of the supported protocols. For example iSCSI to FCoE (Fibre Channel over Ethernet). Note that a HP Virtual Connect profile takes precedence over the setting in this menu. Also, some FlexFabric Adapters may require that network boot be enabled in order to configure the protocol. If the protocol is configured without enabling network boot with certain FlexFabric Adapters, the protocol may not take effect. Once the protocol has taken effect on the first boot after configuring this option, network boot may be disabled if desired.	
	HP NC522m Dual Port 10GbE Multifunction BL-c Adapter	467801-B21
	HP NC532m Dual Port 10GbE BL-c Adapter	467799-B21
	HP NC542m Dual Port Flex-10 10GbE Multifunction BL-c Adapter	539857-B21
	HP NC550m 10GbE 2-port PCIe x8 Flex-10 Ethernet Adapter	581204-B21
	HP NC551m Dual Port FlexFabric 10Gb Converged Network Adapter	580151-B21
	HP BLc NC552m Flex-10GbE Dual Port Adapter	610609-B21
	HP NC553m 10Gb 2-port FlexFabric Adapter	613431-B21

Core Options

HP Fiber Channel Mezzanine Options	Emulex LPe1205 8Gb Fibre Channel Host Bus Adapter for c-Class BladeSystem	456972-B21
	Emulex LPe1105 4Gb Fibre Channel Host Bus Adapter for c-Class BladeSystem	403621-B21
	QLogic QMH2562 8Gb Fibre Channel Host Bus Adapter for c-Class BladeSystem	451871-B21
	QLogic QMH2462 4Gb Fibre Channel Host Bus Adapter for c-Class BladeSystem	403619-B21
	HP BLc Brocade 804 8Gb Fibre Channel Host Bus Adapter	590647-B21
HP Processors	**Six-Core Processors**	
	HP BL490c G6 Intel® Xeon® X5670 (2.93GHz/6-core/95W/12MB) Processor Kit	595826-B21
	HP BL490c G6 Intel® Xeon® X5650 (2.66GHz/6-core/95W/12MB) Processor Kit	595827-B21
	Quad-Core Processors	
	HP BL490c G6 Intel® Xeon® X5570 (2.93GHz/4-core/8MB/95W) Processor Kit	509319-B21
	HP BL490c G6 Intel® Xeon® E5540 (2.53GHz/4-core/8MB/80W) Processor Kit	509322-B21
	HP BL490c G6 Intel® Xeon® L5530 (2.40GHz/4-core/8MB/60W) Processor Kit	576216-B21
	HP BL490c G6 Intel® Xeon® E5504 (2.00GHz/4-core/4MB/80W) Processor Kit	509327-B21
HP Memory	**Registered DIMMs (RDIMMs)**	
	HP 2GB (1x2GB) Dual Rank x8 PC3-10600 (DDR3-1333) Registered CAS-9 Memory Kit	500656-B21
	HP 4GB (1x4GB) Dual Rank x4 PC3-10600 (DDR3-1333) Registered CAS-9 Memory Kit	500658-B21
	HP 4GB (1x4GB) Quad Rank x8 PC3-8500 (DDR3-1066) Registered CAS-7 Low Power Memory Kit	500660-B21
	HP 4GB (1x4GB) Single Rank x4 PC3-10600 (DDR3-1333) Registered CAS-9 Memory Kit	593339-B21
	HP 4GB (1x4GB) Single Rank x4 PC3L-10600 (DDR3-1333) Registered CAS-9 Low Power Memory Kit	604504-B21
	NOTE: Low Voltage DIMMs can only be used with Intel Xeon 5600 series processors.	
	HP 8GB (1x8GB) Dual Rank x4 PC3-10600 (DDR3-1333) Registered CAS-9 Memory Kit	500662-B21
	HP 8GB (1x8GB) Dual Rank x4 PC3-8500 (DDR3-1066) Registered CAS-7 Memory Kit	516423-B21
	HP 8GB (1x8GB) Dual Rank x4 PC3L-10600 (DDR3-1333) Registered CAS-9 Low Power Memory Kit	604506-B21
	NOTE: Low Voltage DIMMs can only be used with Intel Xeon 5600 series processors.	
	HP 16GB (1x16GB) Quad Rank x4 PC3-8500 (DDR3-1066) Registered CAS-7 Memory Kit	500666-B21
	Unbuffered with ECC (UDIMMs)	
	HP 1GB (1x1GB) Single Rank x8 PC3-10600 (DDR3-1333) Unbuffered CAS-9 Memory Kit	500668-B21
	HP 2GB (1x2GB) Dual Rank x8 PC3-10600 (DDR3-1333) Unbuffered CAS-9 Memory Kit	500670-B21
	HP 4GB (1x4GB) Dual Rank x8 PC3-10600 (DDR3-1333) Unbuffered CAS-9 Memory Kit	500672-B21

Core Options

NOTE: All DDR3 memory option kits consist of one DIMM per kit. For detailed memory configuration rules and guidelines, please use the Online DDR3 Memory Configuration Tool: www.hp.com/go/ddr3memory-configurator.

NOTE: Kits described as LP include Low Power DIMMs. For more information on ProLiant Energy Efficient Features, see: http://h18004.www1.hp.com/products/servers/platforms/energyefficient/

NOTE: PC3L is a low voltage memory.

HP Hard Drives

NOTE: Hard drives have either a one year or three year warranty; refer to the specific hard drive QuickSpecs for details.

Solid State Drives (SSD)

HP 32GB 1.5G SATA SFF (2.5-inch) Non-hot Plug Entry 3yr Warranty Solid State Drive	461201-B21
HP 64GB 1.5G SATA SFF (2.5-inch) Non-hot Plug Entry 3yr Warranty Solid State Drive	461203-B21

NOTE: Please see the QuickSpecs for Technical Specifications and additional information: http://h18000.www1.hp.com/products/quickspecs/13121_div/13121_div.html

Additional Options

HP Insight software	**HP Insight Control**	
	HP Insight Control including 1yr 24x7 Technical Support and Updates Electronic License	T9074BAE
	HP Insight Control including 1yr 24x7 Technical Support and Updates Single Server License	452148-B22
	HP Insight Software Media Kit NOTE: Insight Software DVD media without licenses. Contains Insight Control, Insight Dynamics and Virtual Connect Enterprise Manager. Uses an integrated installer to perform quick and accurate software installation and updates.	436222-B21
	NOTE: Licenses ship without media. The HP Insight Control Media Kit can be ordered separately, or can be downloaded at: http://www.hp.com/go/insightupdates. NOTE: Electronic licenses can be used to purchase multiple licenses with a single activation key, and is available in all countries except China and Japan. Customers in China and Japan should order the physical equivalent. NOTE: Customer will receive a license entitlement certificate, which must be redeemed online or via fax in order to obtain the license activation key(s). Includes one year of 24 x 7 HP Software Technical Support & Update Service. NOTE: For additional license kits, including bundles with HP BladeSystem enclosures, please see the Insight Control QuickSpecs at: http://h18004.www1.hp.com/products/quickspecs/12631_div/12631_div.html	
	HP Insight Control for Linux	
	HP Insight Control for Linux including 1yr 24x7 Support Electronic License	TC213AAE
	HP Insight Control for Linux including 1yr 24x7 Support Single Server License	TC209A
	HP Insight Control for Linux Media Kit	TC208A
	NOTE: Licenses ship without media. The Media Kit for Insight Control for Linux can be ordered separately, or can be downloaded at: http://www.hp.com/go/ic-linux (click on Download button). NOTE: Electronic licenses can be used to purchase multiple licenses with a single activation key, and are available in all countries except China and Japan. Customers in China and Japan should order the physical equivalent. NOTE: Customer will receive a license entitlement certificate, which must be redeemed online or via fax in order to obtain the license activation key(s). Includes one year of 24 x 7 HP Software Technical Support Service. NOTE: For additional License Kits, including electronic licensing options, please see the QuickSpecs at: http://h18000.www1.hp.com/products/quickspecs/13019_div/13019_div.html	
	HP Integrated Lights-Out (iLO) Advanced for BladeSystem	
	HP iLO Advanced for BladeSystem including 1yr 24x7 Support Electronic License	TA851AAE
	HP iLO Advanced for BladeSystem including 1yr 24x7 Support Single Server License	512488-B21
	NOTE: Electronic licenses can be used to purchase multiple licenses with a single activation key, and is available in all countries except China and Japan. Customers in China and Japan should order the physical equivalent. NOTE: Customer will receive a license entitlement certificate, which must be redeemed online or via fax in order to obtain the license activation key(s). Includes one year of 24 x 7 HP Software Technical Support Service. NOTE: For additional license kits please see the HP Integrated Lights-Out 2 QuickSpecs at:	

Additional Options

	http://h18000.www1.hp.com/products/quickspecs/12362_div/12362_div.html	
	HP Insight Control server deployment	
	HP Insight Control Server Deployment including 1yr 24x7 Support Electronic License	T9082AAE
	HP Insight Control Server Deployment including 1yr 24x7 Support Single Server License	452151-B21
	NOTE: Licenses ship without media. The Insight Control Media Kit can be ordered separately, or can be downloaded at: http://www.hp.com/go/insightupdates. NOTE: Electronic licenses can be used to purchase multiple licenses with a single activation key, and is available in all countries except China and Japan. Customers in China and Japan should order the physical equivalent. NOTE: Customer will receive a license entitlement certificate, which must be redeemed online or via fax in order to obtain the license activation key(s). Includes one year of 24 x 7 HP Software Technical Support Service. NOTE: For additional license kits please see the Insight Control QuickSpecs at: http://h18004.www1.hp.com/products/quickspecs/12631_div/12631_div.html	
High Performance Clusters	HP Cluster Management Utility Compute Node License NOTE: This part number can be used to purchase one certificate for multiple licenses with a single activation key. Each license is for one node (server). Customer will receive a printed end user license agreement and license entitlement certificate via physical shipment. The license entitlement certificate must be redeemed online in order to obtain a license key. NOTE: For additional license kits please see the QuickSpecs at: http://h18004.www1.hp.com/products/quickspecs/12612_div/12612_div.html	436284-B21
	HP Cluster Management Utility Media and Management License NOTE: Order a minimum of one license per cluster to purchase media including software and documentation, which will be delivered to the customer, and also licenses CMU management. No license key is delivered or required. NOTE: For additional license kits please see the QuickSpecs at: http://h18004.www1.hp.com/products/quickspecs/12612_div/12612_div.html	433257-B21
	HP HPC Linux Value Pack One Processor License NOTE: This part number can be used to purchase one certificate for multiple licenses with a single activation key. Each license is for one socket (a.k.a. processor). Customer will receive a printed end user license agreement and license entitlement certificate via physical shipment. The license entitlement certificate must be redeemed online in order to obtain a license key. NOTE: For additional license kits please see the QuickSpecs at: http://h18004.www1.hp.com/products/quickspecs/13485_div/13485_div.html	TC293A
	HP HPC Linux Value Pack Media NOTE: This part number can be used to purchase media including software and documentation, which will be delivered to the customer. NOTE: For additional license kits please see the QuickSpecs at: http://h18004.www1.hp.com/products/quickspecs/13485_div/13485_div.html	TC294A
HP Security - TPM	HP Trusted Platform Module Option	488069-B21

Additional Options

HP Storage Controller	**HP Smart Array P700m Controller**	
	HP Smart Array P700m/512 4-ports Ext PCIe x8 SAS Controller	508226-B21
	HP Smart Array P700m/256 4-ports Ext PCIe x8 SAS Controller	507925-B21
	NOTE: Please see the QuickSpecs for Technical Specifications and additional configuration information at: http://h18000.www1.hp.com/products/quickspecs/13175_div/13175_div.html (Worldwide)	
	HP Smart Array P712m Controller	
	HP Smart Array P712m/ZM 2-ports Int PCIe x8 SAS Controller	484299-B21
	NOTE: Provides RAID support on internal non-hot plug SSDs.	
	NOTE: Please see the QuickSpecs for Technical Specifications and additional configuration information at: http://h18000.www1.hp.com/products/quickspecs/13296div/13296_div.html (Worldwide)	
	Optional Upgrades	
	HP Smart Array P-Series Low Profile Battery NOTE: Supports HP Smart Array P700m Controller.	452348-B21
	HP 650 mAh P-series Low Profile Battery NOTE: Supports HP Smart Array P712m Controller.	575031-B21
	HP 256MB P-series Cache Upgrade NOTE: Supports HP Smart Array P712m Controller.	462968-B21
	HP Smart Array Advanced Pack including 1yr 24x7 Technical Support and Updates Single Server License NOTE: A license key, a minimum of 256MB cache, and battery kit is required to enable Smart Array Advanced Pack features. For more information go to: http://www.hp.com/go/saap NOTE: Please see the QuickSpecs for Technical Specifications and additional information: http://h18000.www1.hp.com/products/quickspecs/13201_div/13201_div.html (Worldwide)	516471-B21
HP I/O Expansion Options	HP StorageWorks 80GB IO Accelerator for BladeSystem c-Class	AJ876A
	HP StorageWorks 160GB IO Accelerator for BladeSystem c-Class	AJ877A
	HP StorageWorks 320GB IO Accelerator for BladeSystem c-Class	AJ878A
	NOTE: Please see the QuickSpecs for Technical Specifications and additional information: http://h18000.www1.hp.com/products/quickspecs/13220_div/13220_div.html	

Additional Options

HP c-Class Mezzanine Options	QLogic 4X QDR IB Mezzanine HCA for HP BladeSystem c-Class	583210-B21
	HP 4X QDR IB CX2 Dual Port Mezz HCA	592519-B21
	HP 4X DDR InfiniBand Dual Port Mezzanine HCA for c-Class BladeSystem	448262-B21
	NOTE: Please see the QuickSpecs for Technical Specifications and additional information: http://h18000.www1.hp.com/products/quickspecs/12586_div/12586_div.html	
HP Ultrium Tape Blades	HP StorageWorks SB1760c Tape Blade	AQ697A
	NOTE: LTO-4 Ultrium tape technology.	
	HP StorageWorks SB920c Tape Blade	AJ401A
	NOTE: LTO-3 Ultrium technology.	
	HP StorageWorks Ultrium 448c Tape Blade	440947-B21
	NOTE: LTO-2 Ultrium technology.	
	NOTE: The HP PCI Express Mezzanine Pass-Thru Card for HP BladeSystem (431643-B21) is required when installing a tape blade adjacent to a full-height server blade.	
	NOTE: Please see the QuickSpecs for Technical Specifications and additional information: http://h18000.www1.hp.com/products/quickspecs/12729_div/12729_div.html	
HP StorageWorks Storage Blades	HP StorageWorks LTO-5 SB3000c Tape Blade	BS580A
	NOTE: Please see the QuickSpecs for Technical Specifications and additional information: http://h18000.www1.hp.com/products/quickspecs/12729_div/12729_div.html (Worldwide)	
	HP StorageWorks D2200sb PCIe Storage Blade	AP880A
	NOTE: The HP PCI Express Mezzanine Pass-Thru Card (P/N 431643-B21) is required to support the HP StorageWorks D2200sb PCIe Storage Blade with the BL620c G7. Up to two storage blades are supported per server mix and match (Ultrium Tape, D2200sb PCIe Storage, and/or PCI Expansion Blades).	
	NOTE: The HP PCI Express Mezzanine Pass-Thru Card can be placed in mezzanine slot 2 and/or 3.	
	NOTE: Please see the HP StorageWorks D2200sb PCIe Storage Blade QuickSpecs for technical specifications and additional information at: http://h18006.www1.hp.com/storage/bladesystem/index.html.	
HP Expansion Blade	HP BLc PCI Expansion Blade	448018-B21
	NOTE: Ships with one pre-installed PCI-X connect board. Also includes one PCIe connect board which requires installation.	
	NOTE: Please see the QuickSpecs for Technical Specifications and additional configuration information: http://h18000.www1.hp.com/products/quickspecs/12753_div/12753_div.html	

Additional Options

HP USB and SD Options	HP USB 2-Button Optical Scroll Mouse	DC172B
	HP USB Standard Keyboard	DT528A#ABA
	HP 2GB USB Flash Media Drive Key NOTE: HP qualified blank USB key for use with HP ProLiant servers that support the VMware virtualization environment and other HP value-add software like SmartStart. HP recommends this industry standard USB flash device for use with VMware ESXi. USB device must be installed in the internal slot of the ProLiant server for use with VMware ESXi. Refer to HP VMware Getting Started Guide for installation instructions.	608447-B21
	HP 4GB SD Flash Media NOTE: Blank SD media devices are supported for use with VMware and Citrix. SD media must be installed in the internal slot of the ProLiant server. Learn more at: http://www.hp.com/go/proliantvirtualization	580387-B21
HP Care Pack Services	NOTE: The HP Care Pack service part numbers below for ProLiant BL c-Class server blades, cover the server blade and all HP branded hardware options qualified for the server, purchased at the same time or afterwards, internal to the server.	
	Hardware Services On-site Service	
	4-Hour On-site Service, 5-Day x 13-Hour Coverage, 3 Years, Electronic	UK065E
	4-Hour On-site Service, 7-Day x 24-Hour Coverage, 3 Years, Electronic	UK066E
	6-Hour Call to Repair, On-site Service, 7-Day x 24-Hour Coverage, 3 Years, Electronic	UK067E

Memory

NOTE: Memory configurations listed do not apply to "Factory Integrated Models".

Memory Population Guidelines

For detailed memory configuration rules and guidelines, please use the Online DDR3 Memory Configuration Tool: www.hp.com/go/ddr3memory-configurator

Some DIMM installation guidelines are summarized below;

- For the BL490c G6 server with eighteen (18) memory slots:
  - There are three (3) channels per processor; six (6) channels per server
  - There are three (3) DIMM slots for each memory channel; eighteen (18) total slots
  - Memory channel 1 consists of the three (3) DIMMs that are closest to the processor
  - Memory channel 3 consists of the three (3) DIMMs that are furthest from the processor
- DIMM slots that are white should be populated first
- Do not mix Unbuffered memory (UDIMMs) with Registered memory (RDIMMs)
- Do not install DIMMs if the corresponding processor is not installed
- If only one processor is installed in a 2CPU system, only half of the DIMM slots are available
- To maximize performance, balance the total memory capacity between all installed processors
- It is not required, but it is recommended to load the channels similarly if possible
- If any Quad rank DIMMs are installed, all channels are limited to only 2 DIMMs per channel
- You can only install two quad-rank DIMMs per channel
- You can only install two UDIMMs per channel; the third slot in the channel must remain empty
- Populate DIMMs from heaviest load (quad-rank) to lightest load (single-rank) within a channel
- Heaviest load (DIMM with most ranks) within a channel goes furthest from the processor
- For memory mirroring mode, channel 3 must be unpopulated. Channels 1 and 2 are populated identically
- For lock-step mode, channel 3 must be unpopulated. DIMMs in channels 1 and 2 will be installed in pairs. The paired slots will be 1,4; 2,5; 3;6 on a 3DPC system or 1,4; 2,5; on a 2DPC system
- Low Voltage DIMMs can only be used with Intel Xeon 5600 series processors.
- If mixing DIMM voltage is a requirement, please note that the DIMMs will run at 1.5V since all 1.35V are capable of supporting 1.5V operations

DIMM slot/capacity/populated speed table										
DIMM Type	Registered DIMMS (RDIMMs)							Unbuffered with ECC DIMMs (UDIMMs)		
DIMM Rank	Single Rank (1R)	Dual Rank (2R)				Quad Rank (4R)		Single Rank (1R)	Dual Rank (2R)	
DIMM Capacity	4GB	2GB	4GB	8GB	8GB	4GB	16GB	1GB	2GB	4GB
DIMM Native Speed (MHz)	1333	1333	1333	1066	1333	1066	1066	1333	1333	1333
DIMM Voltage	LV/Reg	Reg	Reg	Reg	LV/Reg	Reg	Reg	Reg	Reg	Reg
SLOTS THAT CAN BE POPULATED										
18 slot servers	18	18	18	18	18	12	12	12	12	12
MAXIMUM CAPACITY (GB)										
	72	36	72	144	144	48	192	12	24	48
POPULATED DIMM SPEED (MHz)										
1 DIMM Per Channel	1333	1333	1333	1066	1333	1066	1066	1333	1333	1333
2 DIMM Per Channel	1333*	1333*	1333*	1066	1333*	800	800	1066	1066	1066

Memory

3 DIMM Per Channel	800	800	800	800	800	n/a	n/a	n/a	n/a	n/a
*Supported at 1333 via setting in ROM Based Setup Utility (RBSU)										

NOTES:

- PC3-10600 DIMMs have a maximum speed of 1333MHz. PC3-8500 DIMMs have a maximum speed of 1066MHz
- Mixing DIMM speeds is allowed, but the system processor speed rules always override the DIMM capabilities
- If you do mix DIMM speeds, the memory bus will default to the minimum clock rate of all DIMMs in the system - even if the slower DIMM is on the other processor
- If you install 1x 1066MHz DIMM in channel 1 and 1x 1333MHz DIMM in channel 2, the maximum speed will be 1066MHz
- If you install 1x 1066MHz DIMM in channel 1 and 5x 1333MHz DIMMs with 1 DIMM Per Channel (DPC) in each of the other channels, the maximum speed will be 1066MHz
- If you install 3DPC in one channel (if applicable) and 1DPC in all other channels, you run at 800MHz
- Maximum memory speed will also depend on the processor installed
- References to the above MHz speeds are for the various speeds of DDR3 DIMMs; 1333 refers to DDR3-1333, etc

HP ProLiant BL490c G6 Server Blade DIMM slot and configuration diagrams

Basic memory slot & population diagram

- Population order; start with "A" first, "B" second, "C" third, etc.

18 DIMM SLOTS (9 per CPU node)					
	CPU1		CPU2		
	slot #	population order	slot #	population order	
Chnl 1	1	G	1	G	Chnl 1
	2	D	2	D	
	3	A	3	A	
Chnl 2	4	H	4	H	Chnl 2
	5	E	5	E	
	6	B	6	B	
Chnl 3	7	I	7	I	Chnl 3
	8	F	8	F	
	9	C	9	C	

HP ProLiant BL490c G6 Server Blade (1P Model)

Standard memory configuration (1 CPU model)

- 6GB (3 x 2GB) of PC3-10600 (DDR3-1333) RDIMMs

Memory

	CPU1		CPU2		
	slot #	population order	slot #	population order	
Chnl 1	1	G: empty	1	G: empty	Chnl 1
	2	D: empty	2	D: empty	
	3	A: 2GB DIMM	3	A: empty	
Chnl 2	4	H: empty	4	H: empty	Chnl 2
	5	E: empty	5	E: empty	
	6	B: 2GB DIMM	6	B: empty	
Chnl 3	7	I: empty	7	I: empty	Chnl 3
	8	F: empty	8	F: empty	
	9	C: 2GB DIMM	9	C: empty	

Standard memory plus optional memory (1 CPU model)

- 54GB, consisting of three (3) 2GB RDIMMs plus six (6) 8GB RDIMMs
  - 3x 2GB dual-rank PC3-10600 RDIMMs
  - 6x 8GB dual-rank PC3-8500 RDIMMs

	CPU1		CPU2		
	slot #	population order	slot #	population order	
Chnl 1	1	G: 8GB DIMM	1	G: empty	Chnl 1
	2	D: 8GB DIMM	2	D: empty	
	3	A: 2GB DIMM	3	A: empty	
Chnl 2	4	H: 8GB DIMM	4	H: empty	Chnl 2
	5	E: 8GB DIMM	5	E: empty	
	6	B: 2GB DIMM	6	B: empty	
Chnl 3	7	I: 8GB DIMM	7	I: empty	Chnl 3
	8	F: 8GB DIMM	8	F: empty	
	9	C: 2GB DIMM	9	C: empty	

Standard Memory Replaced with Optional Memory (1 CPU model)
RDIMM maximum configuration

- 96GB, consisting of nine (6) 16GB quad-rank PC3-8500 RDIMMs

Memory

	CPU1		CPU2		
	slot #	population order	slot #	population order	
Chnl 1	1	G: empty	1	G: empty	Chnl 1
	2	D: 16GB DIMM	2	D: empty	
	3	A: 16GB DIMM	3	A: empty	
Chnl 2	4	H: empty	4	H: empty	Chnl 2
	5	E: 16GB DIMM	5	E: empty	
	6	B: 16GB DIMM	6	B: empty	
Chnl 3	7	I: empty	7	I: empty	Chnl 3
	8	F: 16GB DIMM	8	F: empty	
	9	C: 16GB DIMM	9	C: empty	

UDIMM maximum configuration (1 CPU model)

- 24GB, consisting of six (6) 4GB dual-rank PC3-10600 UDIMMs

	CPU1		CPU2		
	slot #	population order	slot #	population order	
Chnl 1	1	G: empty	1	G: empty	Chnl 1
	2	D: 4GB DIMM	2	D: empty	
	3	A: 4GB DIMM	3	A: empty	
Chnl 2	4	H: empty	4	H: empty	Chnl 2
	5	E: 4GB DIMM	5	E: empty	
	6	B: 4GB DIMM	6	B: empty	
Chnl 3	7	I: empty	7	I: empty	Chnl 3
	8	F: 4GB DIMM	8	F: empty	
	9	C: 4GB DIMM	9	C: empty	

Standard Memory Replaced with Optional Memory (2 CPU Model)
RDIMM maximum configuration

- 192GB, consisting of twelve (12) 16GB quad-rank PC3-8500 RDIMMs

Memory

	CPU1		CPU2		
	slot #	population order	slot #	population order	
Chnl 1	1	G: empty	1	G: empty	Chnl 1
	2	D: 16GB DIMM	2	D: 16GB DIMM	
	3	A: 16GB DIMM	3	A: 16GB DIMM	
Chnl 2	4	H: empty	4	H: empty	Chnl 2
	5	E: 16GB DIMM	5	E: 16GB DIMM	
	6	B: 16GB DIMM	6	B: 16GB DIMM	
Chnl 3	7	I: empty	7	I: empty	Chnl 3
	8	F: 16GB DIMM	8	F: 16GB DIMM	
	9	C: 16GB DIMM	9	C: 16GB DIMM	

UDIMM maximum configuration (2 CPU model)

- 48GB, consisting of twelve (12) 4GB dual-rank PC3-10600 UDIMMs

	CPU1		CPU2		
	slot #	population order	slot #	population order	
Chnl 1	1	G: empty	1	G: empty	Chnl 1
	2	D: 4GB DIMM	2	D: 4GB DIMM	
	3	A: 4GB DIMM	3	A: 4GB DIMM	
Chnl 2	4	H: empty	4	H: empty	Chnl 2
	5	E: 4GB DIMM	5	E: 4GB DIMM	
	6	B: 4GB DIMM	6	B: 4GB DIMM	
Chnl 3	7	I: empty	7	I: empty	Chnl 3
	8	F: 4GB DIMM	8	F: 4GB DIMM	
	9	C: 4GB DIMM	9	C: 4GB DIMM	

NOTE: Capacity references are rounded to the common Gigabyte values.

- 1GB = 1024MB
- 2GB = 2048MB
- 4GB = 4096MB
- 8GB = 8192MB
- 16GB = 16384MB

Memory

Following are memory options available from HP:

HP Memory	Registered DIMMs (RDIMMs)	
	HP 2GB (1x2GB) Dual Rank x8 PC3-10600 (DDR3-1333) Registered CAS-9 Memory Kit	500656-B21
	HP 4GB (1x4GB) Dual Rank x4 PC3-10600 (DDR3-1333) Registered CAS-9 Memory Kit	500658-B21
	HP 4GB (1x4GB) Quad Rank x8 PC3-8500 (DDR3-1066) Registered CAS-7 Low Power Memory Kit	500660-B21
	HP 4GB (1x4GB) Single Rank x4 PC3-10600 (DDR3-1333) Registered CAS-9 Memory Kit	593339-B21
	HP 4GB (1x4GB) Single Rank x4 PC3L-10600 (DDR3-1333) Registered CAS-9 Low Power Memory Kit NOTE: Low Voltage DIMMs can only be used with Intel Xeon 5600 series processors.	604504-B21
	HP 8GB (1x8GB) Dual Rank x4 PC3-10600 (DDR3-1333) Registered CAS-9 Memory Kit	500662-B21
	HP 8GB (1x8GB) Dual Rank x4 PC3-8500 (DDR3-1066) Registered CAS-7 Memory Kit	516423-B21
	HP 8GB (1x8GB) Dual Rank x4 PC3L-10600 (DDR3-1333) Registered CAS-9 Low Power Memory Kit NOTE: Low Voltage DIMMs can only be used with Intel Xeon 5600 series processors.	604506-B21
	HP 16GB (1x16GB) Quad Rank x4 PC3-8500 (DDR3-1066) Registered CAS-7 Memory Kit	500666-B21
	Unbuffered with ECC (UDIMMs)	
	HP 1GB (1x1GB) Single Rank x8 PC3-10600 (DDR3-1333) Unbuffered CAS-9 Memory Kit	500668-B21
	HP 2GB (1x2GB) Dual Rank x8 PC3-10600 (DDR3-1333) Unbuffered CAS-9 Memory Kit	500670-B21
	HP 4GB (1x4GB) Dual Rank x8 PC3-10600 (DDR3-1333) Unbuffered CAS-9 Memory Kit	500672-B21
	NOTE: All DDR3 memory option kits consist of one DIMM per kit. For detailed memory configuration rules and guidelines, please use the Online DDR3 Memory Configuration Tool: www.hp.com/go/ddr3memory-configurator. NOTE: PC3L is a low voltage memory.	

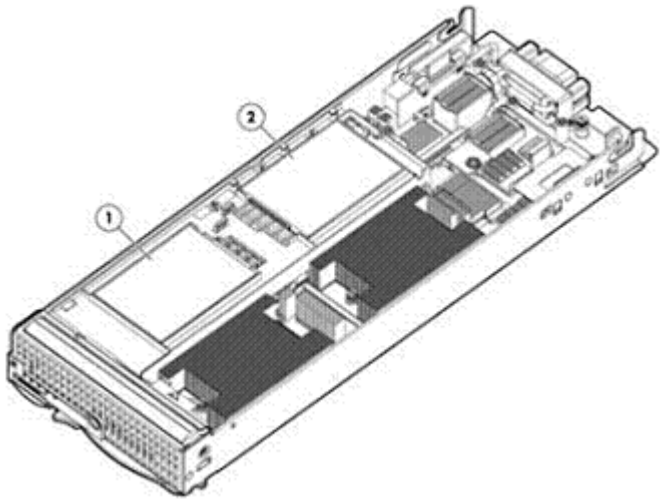

1 Non Hot Plug Solid State Drive (SSD) Bay 1

2 Non Hot Plug Solid State Drive (SSD) Bay 2

Hard Drives

NOTE: Hard drives have either a one year or three year warranty; refer to the specific hard drive QuickSpecs for details.

SATA Non-Hot Plug Solid State Drives

	Quantity Supported	Position Supported	Controller
32GB 1.5G SATA SSD	2	1-2	HP Integrated SATA Controller HP Smart Array P712m Controller
64GB 1.5G SATA SSD	2	1-2	HP Integrated SATA Controller HP Smart Array P712m Controller

External Storage

	Quantity Supported	Position Supported	Host Controller or Adapter
XP Disk Array Systems	Please see the XP Disk Array Systems QuickSpecs below to determine configuration requirements	External	Please see the XP Disk Array Systems Quick Specs for the latest list of supported HBAs

HP StorageWorks XP10000 Disk Array:
http://h18006.www1.hp.com/products/storageworks/xp10000/index.html (Worldwide)

Enterprise Virtual Array Systems	Please see the XP Disk Array Systems QuickSpecs below to determine configuration requirements	External	Please see the XP Disk Array Systems Quick Specs for the latest list of supported HBAs

Storage

HP StorageWorks Enterprise Virtual Array Family:
http://h18006.www1.hp.com/products/quickspecs/12408_div/12408_div.html (Worldwide)

System Unit	**Dimensions** (H x W x D) (with bezel)	7.154 x 2.19 x 20.058 in (18.17 x 5.56 x 50.95 cm)	
	Weight (approximate)	Maximum (all hard drives and processors installed)	14.20 lb (6.44 kg)
		Minimum (one hard drive and processor installed)	10.75 lb (4.87 kg)
	Power Specifications	For power specifications including Input Requirements, BTU Rating, and Power Supply Output, please see the HP BladeSystem c-Class Enclosures QuickSpecs located at URL: HP BladeSystem c3000 Enclosure QuickSpecs: http://h18000.www1.hp.com/products/quickspecs/12790_div/12790_div.html HP BladeSystem c7000 Enclosure QuickSpecs: http://h18000.www1.hp.com/products/quickspecs/12810_div/12810_div.html To review typical system power ratings use the HP BladeSystem Power Sizer which is available via the online tool located at URL: http://www.hp.com/go/bladesystem/powercalculator	
	System Inlet Temperature	Operating	10° to 35°C (50° to 95°F) at sea level with an altitude derating of 1.0°C per every 305 m (1.8°F per every 1000 ft) above sea level to a maximum of 3050 m (10,000 ft), no direct sustained sunlight. Maximum rate of change is 10°C/hr (18°F/hr). The upper limit may be limited by the type and number of options installed. System performance may be reduced if operating with a fan fault or above 30°C (86°F).
		Non-operating	-30° to 60°C (-22° to 140°F). Maximum rate of change is 20°C/hr (36°F/hr).
	Relative Humidity (non-condensing)	Operating	10 to 90% relative humidity (Rh), 28°C (82.4°F) maximum wet bulb temperature, non-condensing.
		Non-operating	5 to 95% relative humidity (Rh), 38.7°C (101.7°F) maximum wet bulb temperature, non-condensing.
	Altitude	Operating	3050 m (10,000 ft). This value may be limited by the type and number of options installed. Maximum allowable altitude change rate is 457 m/min (1500 ft/min).
		Non-operating	9144 m (30,000 ft). Maximum allowable altitude change rate is 457 m/min (1500 ft/min).
	Acoustic Noise	For acoustic noise specifications, please see the HP BladeSystem c-Class Enclosures QuickSpecs located at URL:	

		HP BladeSystem c3000 Enclosure QuickSpecs: http://h18000.www1.hp.com/products/quickspecs/12790_div/12790_div.html HP BladeSystem c7000 Enclosure QuickSpecs: http://h18000.www1.hp.com/products/quickspecs/12810_div/12810_div.html
Embedded NC532i Dual Port Flex-10 10GbE Multifunction Server Adapter	Type	Integrated dual-port KR 10GbE
	Network Processor	Broadcom 57711
	Data Transfer Method	x4 PCI Express Generation 2
	Network Transfer Rate	Two ports, each at 20 Gbps full duplex; 40 Gbps aggregate full duplex theoretical bandwidth NOTE: Each port is autosensing 1 Gb / 10 Gb, and can interoperate with 1 Gb HP BladeSystem c-Class interconnect components. NOTE: Each port on the NC532i adapter transmits from the server at only 20 Gbps (theoretical) full duplex.
	IEEE Compliance	802.1p QoS, 802.1Q VLAN tagging, 802.3ad link aggregation, 802.3ap 10GBase-KR, and 802.3x flow control
	Standard Features	• ProLiant Teaming including Network Fault Tolerance, Transmit Load Balancing, and Switch-Assisted Load Balancing • 4K Jumbo frames • Microsoft Windows Receive Side Scaling (RSS) • Optional Accelerated iSCSI
Environment-friendly Products and Approach	End-of-life Management and Recycling	Hewlett-Packard offers end-of-life HP product return, trade-in, and recycling programs in many geographic areas. For trade-in information, please go to: http://www.hp.com/go/green. To recycle your product, please go to: http://www.hp.com/go/green or contact your nearest HP sales office. Products returned to HP will be recycled, recovered or disposed of in a responsible manner. The EU WEEE directive (2002/95/EC) requires manufacturers to provide treatment information for each product type for use by treatment facilities. This information (product disassembly instructions) is posted on the Hewlett Packard web site at: http://www.hp.com/go/green. These instructions may be used by recyclers and other WEEE treatment facilities as well as HP OEM customers who integrate and re-sell HP equipment.

© Copyright 2011 Hewlett-Packard Development Company, L.P.

The information contained herein is subject to change without notice.

Microsoft and Windows NT are US registered trademarks of Microsoft Corporation. Intel, the Intel logo, Xeon and Xeon Inside are trademarks of Intel Corporation in the U.S. and other countries.

The only warranties for HP products and services are set forth in the express warranty statements accompanying such products and services. Nothing herein should be construed as constituting an additional warranty. HP shall not be liable for technical or editorial errors or omissions contained herein.

For hard drives, 1GB = 1 billion bytes. Actual formatted capacity is less.