HP ProLiant BL495c G5 Server Blade - Spare Parts

New Model Specific Parts Lists

HP ProLiant BL495c G5 Server Blade Generic Parts List

New Model Specific Parts Lists

IMPORTANT: To obtain current part number information for a specific product model, use the Standard Models page for this product family.

Click here to go to the Standard Models page for all model specfic information and to access the product model parts lists .

- The product Standard Models page now links the model SKU numbers to the spare parts list for each model found on the HP PartSurfer web site. (To report missing or incorrect parts information in PartSurfer, please use the "Contact us" and "Missing or incorrect data" links within the PartSurfer web site utility.)
- To lookup RoHS-compliant information in PartSurfer, use the component’s option part number or the sales order number for a system in which the component is used (available in the QuickSpecs or Standard Models page). The spare part number does not provide RoHS-compliant information.

top

HP ProLiant BL495c G5 Server Blade Generic Parts List

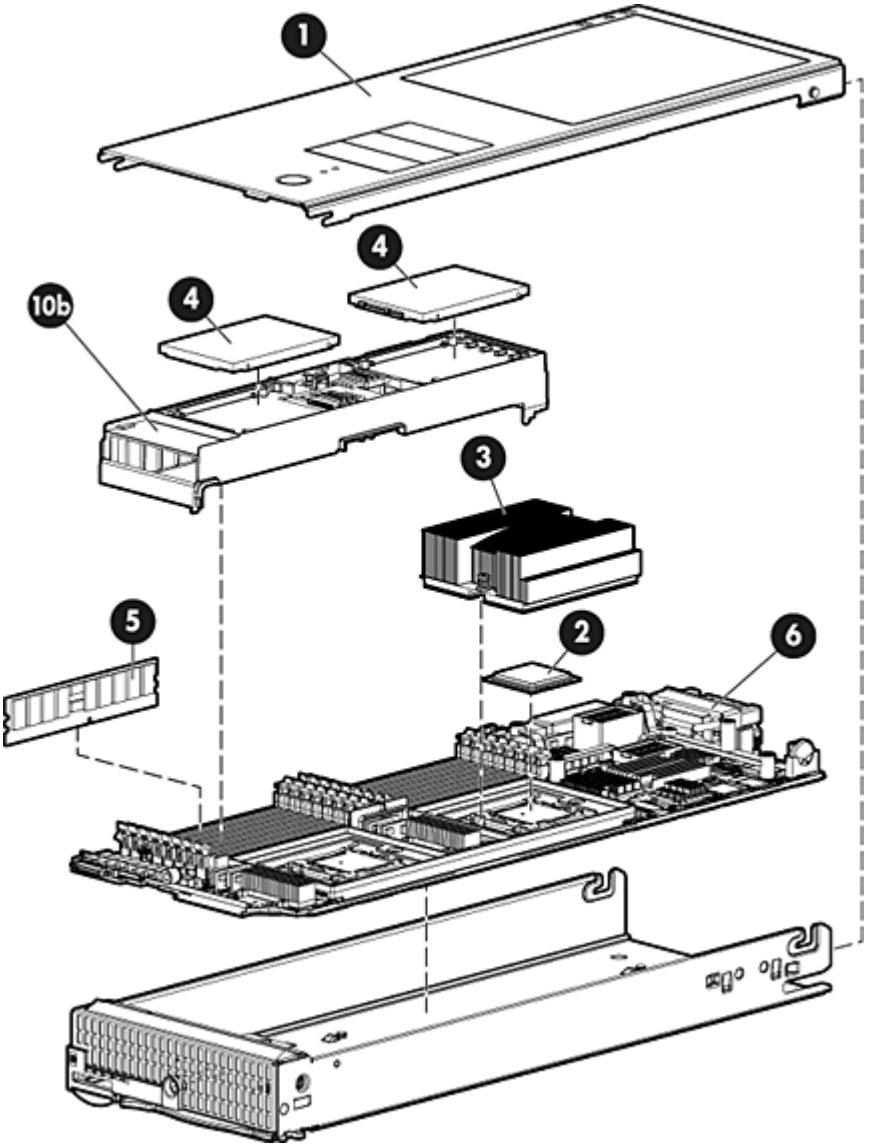

Item	Description	Spare part number	Customer self repair
1	Access panel	490819-001	Mandatory[1]
Processors			
2a	2.3 GHz AMD Opteron Model 2356[5]	448035-001	Optional[2]
2b	2.1 GHz AMD Opteron Model 2352[4,5]	448033-001	Optional[2]
2c	1.9 GHz AMD Opteron Model 2347 HE[4,5]	457124-001	Optional[2]
2d	2.7 GHz AMD Opteron Model 2384[4,5]	505917-001	Optional[2]
2e	2.6 GHz AMD Opteron Model 2382[4,5]	505635-001	Optional[2]
2f	2.4 GHz AMD Opteron Model 2378[4,5]	500514-001	Optional[2]
2g	2.3 GHz AMD Opteron Model 2376 HE[4,5]	515187-001	Optional[2]

Item	Description	Spare part number	Customer self repair
2h	2.9 GHz AMD Opteron Model 2389[4,5]	534249-001	Optional[2]
2i	2.8 GHz AMD Opteron Model 2387[4,5]	534250-001	Optional[2]
2j	2.5 GHz AMD Opteron Model 2381 HE[4,5]	538607-001	Optional[2]
3	Heatsink with thermal grease	490817-001	Optional[2]
Solid state hard drives			
4a	64 GB, 2.5 in SATA	461333-001	Mandatory[1]
4b	32 GB, 2.5 in SATA	461332-001	Mandatory[1]
Memory DIMMs, PC2-5300 / PC2-6400, registered			
5a	1 GB, low power, PC2-5300, registered	488608-001	Mandatory[1]
5b	2 GB, low power, PC2-5300, registered DIMM [4]	416357-001	Mandatory[1]
5c	4 GB, low power, PC2-5300, registered DIMM [4]	487945-001	Mandatory[1]
5d	4 GB, PC2-5300, DDR2 Dual-Rank DIMM [4]	432670-001	Mandatory[1]
5e	8 GB, PC2-5300, registered DIMM [4]	432671-001	Mandatory[1]
5f	1 GB, PC2- 6400, DDR2 Registered DIMM [4]	501156-001	Mandatory[1]
5g	2 GB, PC2-6400, DDR2 Registered DIMM [4]	501157-001	Mandatory[1]
5h	4 GB, PC2-6400, DDR2 Registered DIMM [4]	501158-001	Mandatory[1]
5i	4 GB, PC2-6400, DDR2 Registered DIMM, Low Power [4]	504589-001	Mandatory[1]
6	System board	488623-001	Optional[2]
7	System battery[4]	234556-001	Mandatory[1]
8	HP c-Class Blade SUV Cable[4]	416003-001	Mandatory[1]
Mezzanine adapters[4]			
9a	Emulex LPe1105-HP 4 Gb FC HBA for HP c-Class BladeSystem	405921-001	Mandatory[1]
9b	QLogic QMH2462 4 Gb FC HBA for HP c-Class BladeSystem	405920-001	Mandatory[1]
9c	HP NC325m PCI Express Quad Port Gigabit Server Adapter for c-Class BladeSystem	436011-001	Mandatory[1]
9d	HP NC326m PCI Express Dual Port 1 Gb Server Adapter for c-Class BladeSystem	419330-001	Mandatory[1]
9e	HP NC360m HBA for c-Class BladeSystem	448068-001	Mandatory[1]

Item	Description	Spare part number	Customer self repair
9f	HP NC364m Quad Port 1 GbE BL-c Adapter	448066-001	Mandatory[1]
9g	HP NC382m Dual Port 1 GbE Multifunction BL-c Adapter	462748-001	Mandatory[1]
9h	HP NC512m Dual Port 10 GbE Multifunction BL-c Adapter	448515-001	Mandatory[1]
9i	HP NC532m Dual Port Flex-10 10 GbE Multifunction BL-c Adapter	466308-001	Mandatory[1]
9j	QLogic QMH4062 1 GbE iSCSI BL-c Adapter	488081-001	Mandatory[1]
Hardware and plastics kit			
10a	Processor blank[4]	490818-001	Mandatory[1]
10b	DIMM baffle	490818-001	Mandatory[1]
10c	Battery tray[4]	490818-001	Mandatory[1]
10d	System connector cover[4]	490818-001	Mandatory[1]
10e	Processor cage[4]	490818-001	Mandatory[1]
10f	Server blade handle[4]	490818-001	Mandatory[1]
10g	Server blade handle release[4]	490818-001	Mandatory[1]
10h	Server blade handle spring[4]	490818-001	Mandatory[1]
10i	Server blade handle screw[4]	490818-001	Mandatory[1]
Solid state hard drive cables[4]			
11a	Hard drive power cable	490820-001	Mandatory[1]
11b	Hard drive data cable	490820-001	Mandatory[1]

NOTE: **1:** Mandatory—Parts for which customer self repair is mandatory. If the customer requests HP to replace these parts, the customer will be charged for the travel and labor costs of this service.

2: Optional—Parts for which customer self repair is optional. These parts are also designed for customer self repair. If, however, HP replaces the parts for the customer, there may or may not be additional charges, depending on the type of warranty service designated for the product.

3: No—Some HP parts are not designed for customer self repair. In order to satisfy the customer warranty, HP requires that an authorized service provider replace the part. These parts are identified as "No" in the Illustrated Parts Catalog.

4: Not shown

5: Do not mix processors with different model numbers, speeds, cache sizes, or power consumption.

top

©Copyright 2026 Hewlett Packard Enterprise Development LP

Hewlett Packard Enterprise Development shall not be liable for technical or editorial errors or omissions contained herein. The information provided is provided "as is" without warranty of any kind. To the extent permitted by law, neither HPE nor its affiliates, subcontractors or suppliers will be liable for incidental, special or consequential damages including downtime cost; lost profits; damages relating to the procurement of substitute products or services; or damages for loss of data, or software restoration. The information in this document is subject to change without notice. Hewlett Packard Enterprise Development and the names of Hewlett Packard Enterprise Development products referenced herein are trademarks of Hewlett Packard Enterprise Development in the United States and other countries. Other product and company names mentioned herein may be trademarks of their respective owners.