HPE ProLiant BL685c G6 Server Blade - Parts Support Guide

Part Number: External
Published: 2020
Edition: 1

HPE ProLiant BL685c G6 Server Blade - Parts Support Guide

Abstract
This document will help you identify parts of the product and also gives a step-by-step instruction on how to remove and replace the components.

Part Number: External
Published: 2020
Edition: 1

© Copyright 2020 Hewlett Packard Enterprise Development LP

Notices

The information contained herein is subject to change without notice. The only warranties for Hewlett Packard Enterprise products and services are set forth in the express warranty statements accompanying such products and services. Nothing herein should be construed as constituting an additional warranty. Hewlett Packard Enterprise shall not be liable for technical or editorial errors or omissions contained herein.

Confidential computer software. Valid license from Hewlett Packard Enterprise required for possession, use, or copying. Consistent with FAR 12.211 and 12.212, Commercial Computer Software, Computer Software Documentation, and Technical Data for Commercial Items are licensed to the U.S. Government under vendor's standard commercial license.

Links to third-party websites take you outside the Hewlett Packard Enterprise website. Hewlett Packard Enterprise has no control over and is not responsible for information outside the Hewlett Packard Enterprise website.

Acknowledgments

Intel®, Itanium®, Optane™, Pentium®, Xeon®, Intel Inside®, and the Intel Inside logo are trademarks of Intel Corporation in the U.S. and other countries.
Microsoft® and Windows® are either registered trademarks or trademarks of Microsoft Corporation in the United States and/or other countries.
Adobe® and Acrobat® are trademarks of Adobe Systems Incorporated.
Java® and Oracle® are registered trademarks of Oracle and/or its affiliates.
UNIX® is a registered trademark of The Open Group.
All third-party marks are property of their respective owners.

Table of contents

Part Locator
- Front view 5
  - Access panel 5
- Back view 5
- Top view 6
- Internal view 1 6
  - DIMM baffles 6
  - Battery backed write cache module 7
  - Solid state drive 7
  - Mezzanine card 7
  - System board 8
  - Battery backed write cache battery pack 8
  - Heatsinks 9
  - SAS controller 9
  - Server blade release lever and release button 10
  - SAS and SATA hard drive 10
  - Front panel and hard drive cage assembly 10
- Internal view 2 11
  - Processors 11
  - DIMMs 12
  - System battery 12

Remove/Replace
- References
  - Required Tools 13
  - Preparation Procedures 13
  - Safety Considerations 14
- Procedures
  - Access Panel 15
  - SAS Hard Drive 15
  - Solid State Drive 16
  - DIMM Baffle 16
  - DIMM 17
  - Mezzanine Card 17
  - SAS Controller 18

Battery-Backed Write Cache Module....19
Battery-Backed Write Cache Battery Pack....19
Front Panel/Hard Drive Cage Assembly....20
Server Blade Release Lever....20
Release Button....21
Heat Sink....22
Processor....23
System Battery....24
System Board....25

Front view



Access panel



Back view



Top view



Internal view 1



DIMM baffles



Battery backed write cache module



Solid state drive

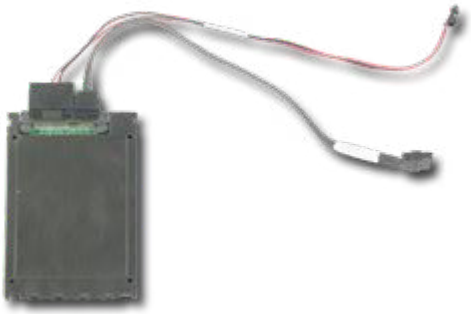

Mezzanine card



System board

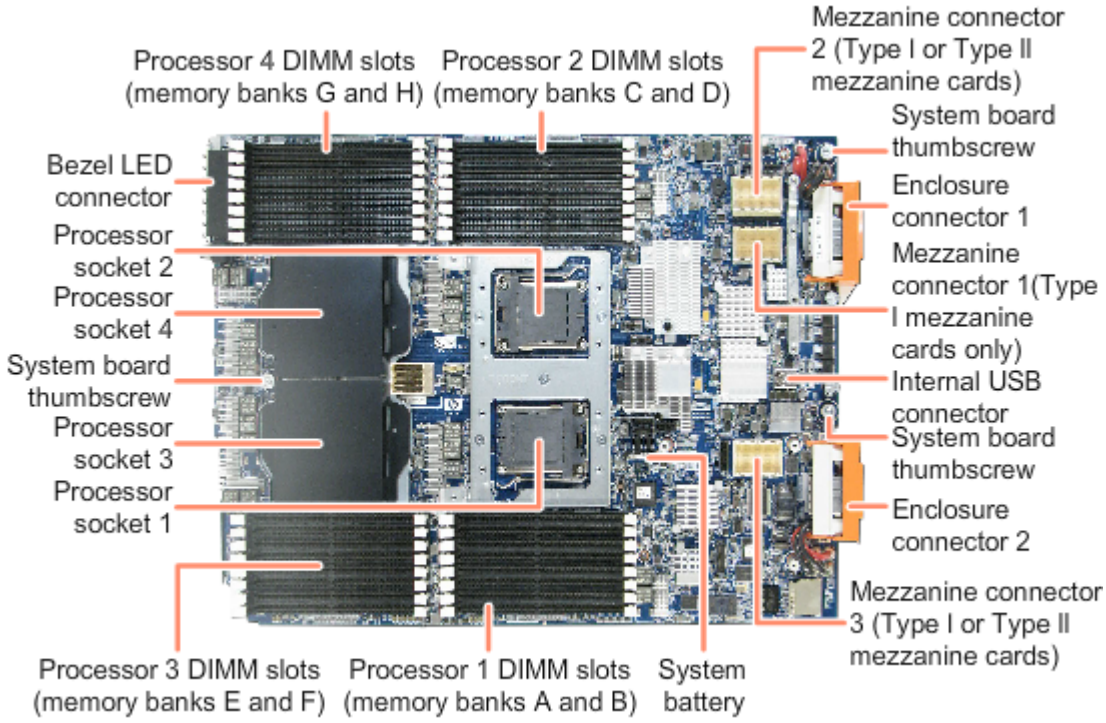

Battery backed write cache battery pack



Heatsinks



SAS controller

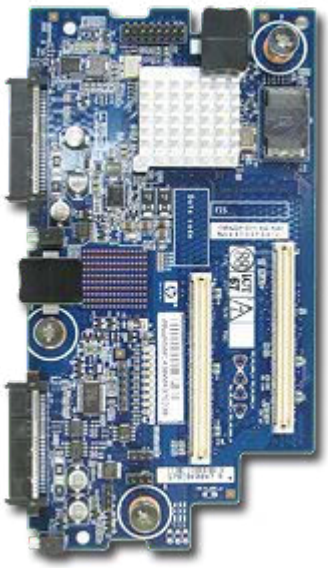

Server blade release lever and release button



SAS and SATA hard drive



Front panel and hard drive cage assembly



Internal view 2

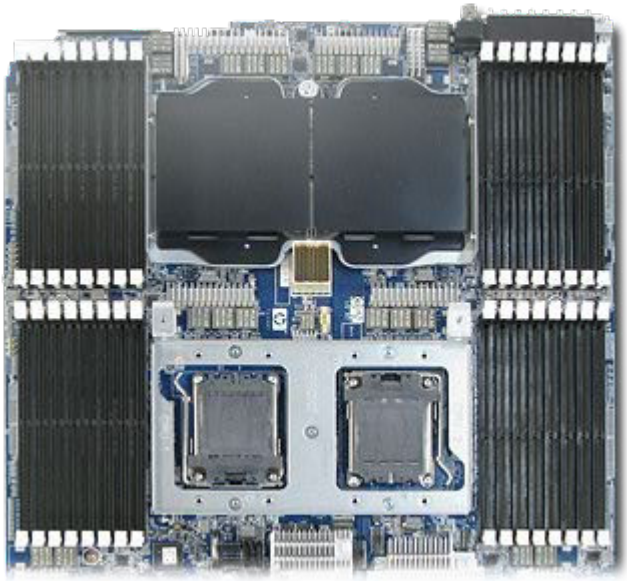

Processors

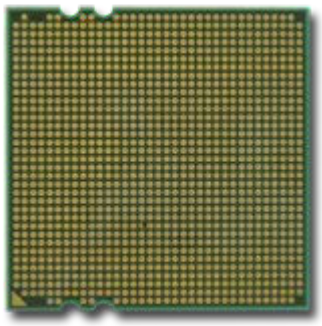

DIMMs



System battery



Required Tools

You need the following items for some procedures:

- T15 Torx screwdriver (provided inside the access panel)
- Alcohol swab
- Thermal grease

Preparation Procedures

To service any internal server blade component, power down the server blade and remove it from the enclosure.

Power down the server blade

Before powering down the server blade for any upgrade or maintenance procedures, perform a backup of critical server data and programs.

Depending on the Onboard Administrator configuration, use one of the following methods to power down the server blade:

- Use a virtual power button selection through iLO 2
- Press and release the Power on/Standby button
- Press and hold the Power on/Standby button for more than 4 seconds to force the server blade to enter Standby mode
- Execute one of the following commands using the Onboard Administrator CLI:
  - poweroff server all, or
  - poweroff server all force
- Use the Onboard Administrator GUI to initiate a shutdown

After initiating a virtual power down command, be sure that the server blade go into Standby mode by observing that the system power LED is amber.

Remove the server blade

Caution! Do not use the server blade release lever to lift or carry the server blade. Always support the weight of the server blade by handling the chassis directly. Improper use can damage the release lever and the server blade.

1. Identify the proper server blade ("Front panel LEDs" on page 55 of the MSG).
2. Power down the server blade (on page 23).
3. Remove the server blade.
4. Place the server blade on a flat, level work surface.

Safety Considerations

Before performing service procedures, review all the safety information.

Preventing electrostatic discharge

To prevent damaging the system, be aware of the precautions you need to follow when setting up the system or handling parts. A discharge of static electricity from a finger or other conductor may damage system boards or other static-sensitive devices. This type of damage may reduce the life expectancy of the device. To prevent electrostatic damage:

- Avoid hand contact by transporting and storing products in static-safe containers.
- Keep electrostatic-sensitive parts in their containers until they arrive at static-free workstations.
- Place parts on a grounded surface before removing them from their containers.
- Avoid touching pins, leads, or circuitry.
- Always be properly grounded when touching a static-sensitive component or assembly.

Server blade warnings and cautions

Before installing a server, be sure that you understand the following warnings and cautions.

WARNING! To reduce the risk of shock or injury from high-current electrical energy, do not remove the server blade access panel and then install the server blade into the enclosure.

WARNING! To reduce the risk of personal injury from hot surfaces, allow the drives and the internal system components to cool before touching them.

WARNING! Do not operate the server blade with the access panel removed. Operating the server blade in this manner results in improper airflow and improper cooling that can lead to thermal damage.

Caution! When performing non-hot-plug operations, you must power down the server blade and/or the system. However, it may be necessary to leave the server blade powered up when performing other operations, such as hot-plug installations or troubleshooting.

Access Panel

https://support.hpe.com/hpesc/public/videoDisplay?videoId=vpsg00001061en_us&noframe

Access panel removal

To remove the component:

1. Power down the server blade.
2. Remove the server blade.
3. Press the access panel release button, and then slide the access panel to the rear.
4. Remove the access panel.

Access panel replacement

To replace the component:

1. Place the access panel on top of the server blade. Allow the panel to extend past the rear of the server blade approximately 1cm (0.25-inch).
2. Slide the access panel to the closed position.

SAS Hard Drive

https://support.hpe.com/hpesc/public/videoDisplay?videoId=vpsg00001062en_us&noframe

SAS hard drive removal

To remove the component:

1. Determine the status of the hard drive from the hot-plug SAS hard drive LED combinations.
2. Back up all server data.

3. Remove the hard drive from the front drive cage.

SAS hard drive replacement

To replace the component, reverse the removal procedures.

Solid State Drive

https://support.hpe.com/hpesc/public/videoDisplay?videoId=vpsg00001063en_us&noframe

Solid state drive removal

To remove the component:

1. Power down the server blade.
2. Remove the server blade.
3. Remove the access panel.
4. Remove the solid state drive by lifting straight up and away from the DIMM baffel.

Solid state drive replacement

To replace the component, reverse the removal procedures.

DIMM Baffle

https://support.hpe.com/hpesc/public/videoDisplay?videoId=vpsg00001064en_us&noframe

DIMM baffle removal

Caution! To avoid damage to the server blade and the enclosures, install all DIMM baffles in the proper location after adding or replacing DIMMs. DIMM baffles that are missing or installed incorrectly can compromise server blade and enclosure cooling.

To remove the component:

1. Power down the server blade.
2. Remove the server blade.
3. Remove the access panel.
4. Remove the solid state drives, if installed.
5. Remove the DIMM baffle.

DIMM baffle replacement

To replace the component, reverse the removal procedure.

DIMM

https://support.hpe.com/hpesc/public/videoDisplay?videoId=vpsg00001065en_us&noframe

DIMM removal

To remove the component:

1. Power down the server blade.
2. Remove the server blade.
3. Remove the access panel.
4. Remove the solid state drives, if installed.
5. Remove the DIMM baffle to access the appropriate DIMM socket.
6. Remove the DIMM.

DIMM replacement

To replace the component, reverse the removal procedures.

Mezzanine Card

https://support.hpe.com/hpesc/public/videoDisplay?videoId=vpsg00001066en_us&noframe

Mezzanine card removal

To remove the component:

1. Power down the server blade.
2. Remove the server blade.
3. Remove the access panel.
4. Remove the mezzanine card by loosening the three thumbscrews and lifting up with a slight pressure.

Caution! To prevent damage to the server blade, apply pressure over the mezzanine connector when installing the mezzanine card. Do not apply pressure to the edges of the card.

Mezzanine card replacement

To replace the component, reverse the removal procedure.

SAS Controller

https://support.hpe.com/hpesc/public/videoDisplay?videoId=vpsg00001067en_us&noframe

SAS controller removal

To remove the component:

1. Power down the server blade.
2. Remove the server blade.
3. Remove the access panel.
4. Remove the SAS controller by loosening the three thumbscrews and lifting up with a slight pressure.

SAS controller replacement

To replace the component, reverse the removal procedures.

Battery-Backed Write Cache Module

https://support.hpe.com/hpesc/public/videoDisplay?videoId=vpsg00001068en_us&noframe

Battery-backed write cache module removal

To remove the component:

1. Power down the server blade.
2. Remove the server blade.
3. Remove the access panel.
4. If installed, disconnect the battery pack cable.
5. Remove the battery-backed write cache module by lifting up with a slight pressure.

Battery-backed write cache module replacement

To replace the component, reverse the removal procedures.

Battery-Backed Write Cache Battery Pack

https://support.hpe.com/hpesc/public/videoDisplay?videoId=vpsg00001069en_us&noframe

Battery-backed write cache battery pack removal

To remove the component:

1. Power down the server blade.
2. Remove the server blade.
3. Remove the access panel.
4. Remove the battery pack by pressing the tab on the battery tray, then lifting straight up.
5. Disconnect the battery pack cable.

Battery-backed write cache battery pack replacement

To replace the component, reverse the removal procedures.

Front Panel/Hard Drive Cage Assembly

https://support.hpe.com/hpesc/public/videoDisplay?videoId=vpsg00001070en_us&noframe

Front panel/Hard drive cage assembly removal

To remove the component:

1. Power down the server blade.
2. Remove the server blade.
3. Remove the access panel.
4. Remove all hard drives if installed.
5. Remove the SAS controller if installed.
6. Remove the front panel/hard drive cage assembly by loosening the two thumbscrews then removing the front panel screws.

Front panel/Hard drive cage assembly replacement

To replace the component:

1. Insert the front panel/hard drive cage assembly, then tighten the two thumbscrews before installing the front panel screws.

Server Blade Release Lever

https://support.hpe.com/hpesc/public/videoDisplay?videoId=vpsg00001071en_us&noframe

Server blade release lever removal

To remove the component:

1. Power down the server blade.
2. Remove the server blade.
3. Remove the access panel.
4. Remove all hard drives if installed.
5. Remove all hard drive blanks.
6. Remove the front panel/hard drive cage assembly.
7. Disengage the release lever from the release button.
8. Remove the server blade release lever.

Server blade release lever replacement

To replace the component, reverse the removal procedures.

Release Button

https://support.hpe.com/hpesc/public/videoDisplay?videoId=vpsg00001072en_us&noframe

Release button removal

To remove the component:

1. Power down the server blade.
2. Remove the server blade.
3. Remove the access panel.
4. Remove all hard drives if installed.
5. Remove all hard drive blanks.
6. Remove the front panel/hard drive cage assembly.
7. Remove the system board. System board components, such as DIMMs, heat sinks, and mezzanine cards, that do not interfere with the removing of the system board can remain on the system board.
8. Remove the release button by depressing the two release levers and slide to the rear.

Release button replacement

To replace the component, reverse the removal procedures.

Heat Sink

https://support.hpe.com/hpesc/public/videoDisplay?videoId=vpsg00001073en_us&noframe

Heat sink removal

To remove the component:

1. Power down the server blade.
2. Remove the server blade.
3. Remove the access panel.
4. If replacing heat sink 3 or 4:
   a. Remove the hard drive, if installed.
   b. Remove the SAS controller, if installed.
5. Remove the front panel/hard drive cage assembly.
6. Remove the failed heat sink.

Heat sink replacement

To replace the component:

Caution! Heat sink retaining screws should be tightened in diagonal opposite pairs (in an "X" pattern).

Important! When installing the heat sink, align the guide pins on the processor retention bracket with the alignment holes in the heat sink.

1. Clean the old thermal grease from the processor with the alcohol swab. Allow the alcohol to evaporate before continuing.
2. Apply all the grease to the top of the processor in an S pattern to ensure even distribution.
3. Install the heat sink.

4. If removed, install the front panel/hard drive cage assembly.
5. If removed, install the SAS controller.
6. If removed, install the hard drives.
7. Install the access panel.

Processor

https://support.hpe.com/hpesc/public/videoDisplay?videoId=vpsg00001074en_us&noframe

Processor removal

Caution! To prevent possible server malfunction, do not mix processors of different speeds or cache sizes. Refer to the label on the processor heat sink for a description of the processor.

Caution! The server blade supports only two- or four-processor configurations. Always populate processor sockets 1 and 2 with processors and heat sinks. To prevent overheating, always populate processor sockets 3 and 4 with processors and heat sinks or processor socket covers and heat sink blanks.

To remove the component:

1. Power down the server blade.
2. Remove the server blade.
3. Remove the access panel.
4. Remove the heat sink.
5. Open the processor retaining latch and the processor socket retaining bracket.
6. Using your fingers, remove the failed processor.

Processor replacement

To replace the component:

Caution! The pins on the processor socket are very fragile. Any damage to them may require replacing the system board.

Caution! Failure to completely open the processor locking lever prevents the processor from seating during installation, leading to hardware damage.

1. If the processor has separated from the installation tool, carefully re-insert the processor in the tool.
2. Align the processor installation tool with the socket and install the processor.
3. Press down firmly until the processor installation tool clicks and separates from the processor, and then remove the processor installation tool.
4. Close the processor retaining bracket and processor retaining latch.
5. Clean the old thermal grease from the heat sink with the alcohol swab. Allow the alcohol to evaporate before continuing.
6. Apply all the grease to the top of the processor in an S pattern to ensure even distribution.
7. Install the heat sink.
8. If removed, install the front panel/hard drive cage assembly.
9. If removed, install the SAS controller.
10. If removed, install the hard drives.
11. Install the access panel.

System Battery

https://support.hpe.com/hpesc/public/videoDisplay?videoId=vpsg00001075en_us&noframe

System battery removal

To remove the component:

1. Power down the server blade.
2. Remove the server blade.
3. Remove the access panel.
4. Identify the battery location.
5. Remove the battery.

System battery replacement

To replace the component, reverse the removal procedures.

System Board

https://support.hpe.com/hpesc/public/videoDisplay?videoId=vpsg00001076en_us&noframe

System board removal

To remove the component:

1. Power down the server blade.
2. Remove the server blade.
3. Remove the access panel.
4. Remove the cache module battery pack, if installed.
5. Remove all hard drives.
6. Remove the SAS controller module, if installed.
7. Remove the front panel/hard drive cage assembly.
8. Remove the DIMM baffles.
9. Remove all DIMMs.
10. Remove any installed mezzanine cards.
11. Remove the heat sink.
12. Open the processor retaining latch and processor socket retaining bracket.
13. Using your fingers, remove the processor from the failed system board.
14. Remove the BBWC battery holders.
15. Loosen the thumbscrews then slide the failed system board to the rear of the server chassis.

System board replacement

To replace the system board:

1. Install the spare system board.
2. Prepare the processor socket on the spare system board:

a. Remove the processor socket protective cover.

b. Open the processor latch and the processor socket retaining bracket.

3. Install the processor socket cover onto the socket of the failed system board.
4. Install the processor on the spare system board.
5. Close the processor retaining latch and the processor socket retaining bracket.
6. Clean the old thermal grease from the heatsink and the top of the processor with the alcohol swab. Allow the alcohol to evaporate before continuing.
7. Apply all the grease to the top of the processor in an S pattern to ensure even distribution.
8. Install the heat sink.
9. Install the BBWC battery holders.
.0. Install all components removed from the failed system board.
.1. Install the front panel/hard drive cage assembly.
.2. Install the SAS controller.
.3. Install the hard drives.
.4. Install the access panel.
.5. Install the server blade.