Hewlett Packard Enterprise

HPE BladeSystem c7000 Enclosure

Maintenance and Service Guide

Abstract

This guide is for an experienced service technician. Hewlett Packard Enterprise assumes you are qualified in the servicing of computer equipment and trained in recognizing hazards in products with hazardous energy levels and are familiar with weight and stability precautions for rack installations.

Part Number: 413336-014R
November 2015
Edition: 15

© Copyright 2006, 2015 Hewlett Packard Enterprise Development LP

The information contained herein is subject to change without notice. The only warranties for Hewlett Packard Enterprise products and services are set forth in the express warranty statements accompanying such products and services. Nothing herein should be construed as constituting an additional warranty. Hewlett Packard Enterprise shall not be liable for technical or editorial errors or omissions contained herein.

Microsoft® and Windows® are either registered trademarks or trademarks of Microsoft Corporation in the United States and/or other countries.

Contents

Customer self repair 5
Parts only warranty service 5
Illustrated parts catalog 15
Mechanical components 15
System components 18
Front system components 18
Rear system components 21
Removal and replacement procedures 26
Required tools 26
Safety considerations 26
Preventing electrostatic discharge 26
Warning and caution messages 26
Preparing the enclosure 28
Power down the server blades or workstation blades 28
Power down the storage blade 29
Power down the enclosure 29
HPE BladeSystem c7000 power supply or power supply blank 29
Device bay blank 30
Device bay shelf 31
Half-height or full-height blade 33
HPE BladeSystem Insight Display 35
Fan blank 37
Active Cool 200 fan 37
Interconnect blank 38
Enclosure front bezels (Platinum models only) 39
Interconnect switch or Pass-Thru module 39
Interconnect bay dividers 40
Onboard Administrator blank 41
Onboard Administrator 41
Onboard Administrator tray 42
AC input module 43
AC control module 43
Rear cage 44
Insight Display front-to-rear interconnect board 46
Insight Display signal pass-thru board 48
Location discovery services board (Platinum models only) 50
Midplane assembly 51
Cabling 56
Single-phase AC configuration 56
Three-phase AC configuration 56
HPE BladeSystem c7000 Enclosure DC configuration 57
Onboard Administrator cabling 58
Onboard Administrator with KVM cabling 59
Diagnostic tools 60
Troubleshooting resources 60
Onboard Administrator errors 60
Server blade diagnostic tools 60
HPE Insight Diagnostics 60
HPE Insight Diagnostics survey functionality 61
Integrated Management Log 61
Array Diagnostic Utility 61

Component identification 62
Enclosure front components 62
Device bay numbering 62
Power supply LEDs 64
Power supply bay numbering 64
HPE BladeSystem Insight Display 65
Enclosure rear components 66
Interconnect module bay numbering 67
Onboard Administrator components 68
Onboard Administrator LEDs and buttons 69
Onboard Administrator with KVM LEDs and buttons 69
Fan bay numbering 70
Fan LED 70
Specifications 71
Environmental specifications 71
Enclosure specifications 71
Power specifications 72
DC power 72
Single-phase power 72
Three-phase power (North America/Japan) 72
Three-phase power (International) 73
Acronyms and abbreviations 74
Documentation feedback 75
Index 76

Customer self repair

Hewlett Packard Enterprise products are designed with many Customer Self Repair (CSR) parts to minimize repair time and allow for greater flexibility in performing defective parts replacement. If during the diagnosis period Hewlett Packard Enterprise (or Hewlett Packard Enterprise service providers or service partners) identifies that the repair can be accomplished by the use of a CSR part, Hewlett Packard Enterprise will ship that part directly to you for replacement. There are two categories of CSR parts:

- **Mandatory**—Parts for which customer self repair is mandatory. If you request Hewlett Packard Enterprise to replace these parts, you will be charged for the travel and labor costs of this service.
- **Optional**—Parts for which customer self repair is optional. These parts are also designed for customer self repair. If, however, you require that Hewlett Packard Enterprise replace them for you, there may or may not be additional charges, depending on the type of warranty service designated for your product.

NOTE: Some Hewlett Packard Enterprise parts are not designed for customer self repair. In order to satisfy the customer warranty, Hewlett Packard Enterprise requires that an authorized service provider replace the part. These parts are identified as "No" in the Illustrated Parts Catalog.

Based on availability and where geography permits, CSR parts will be shipped for next business day delivery. Same day or four-hour delivery may be offered at an additional charge where geography permits. If assistance is required, you can call the Hewlett Packard Enterprise Support Center and a technician will help you over the telephone. Hewlett Packard Enterprise specifies in the materials shipped with a replacement CSR part whether a defective part must be returned to Hewlett Packard Enterprise. In cases where it is required to return the defective part to Hewlett Packard Enterprise, you must ship the defective part back to Hewlett Packard Enterprise within a defined period of time, normally five (5) business days. The defective part must be returned with the associated documentation in the provided shipping material. Failure to return the defective part may result in Hewlett Packard Enterprise billing you for the replacement. With a customer self repair, Hewlett Packard Enterprise will pay all shipping and part return costs and determine the courier/carrier to be used.

For more information about the Hewlett Packard Enterprise CSR program, contact your local service provider. For the North American program, go to the Hewlett Packard Enterprise CSR website (http://www.hpe.com/support/selfrepair).

Parts only warranty service

Your Hewlett Packard Enterprise Limited Warranty may include a parts only warranty service. Under the terms of parts only warranty service, Hewlett Packard Enterprise will provide replacement parts free of charge.

For parts only warranty service, CSR part replacement is mandatory. If you request Hewlett Packard Enterprise to replace these parts, you will be charged for the travel and labor costs of this service.

Réparation par le client (CSR)

Les produits Hewlett Packard Enterprise comportent de nombreuses pièces CSR (Customer Self Repair = réparation par le client) afin de minimiser les délais de réparation et faciliter le remplacement des pièces défectueuses. Si pendant la période de diagnostic, Hewlett Packard Enterprise (ou ses partenaires ou mainteneurs agréés) détermine que la réparation peut être effectuée à l'aide d'une pièce CSR, Hewlett Packard Enterprise vous l'envoie directement. Il existe deux catégories de pièces CSR :

- **Obligatoire—**Pièces pour lesquelles la réparation par le client est obligatoire. Si vous demandez à Hewlett Packard Enterprise de remplacer ces pièces, les coûts de déplacement et main d'œuvre du service vous seront facturés.
- **Facultatif—**Pièces pour lesquelles la réparation par le client est facultative. Ces pièces sont également conçues pour permettre au client d'effectuer lui-même la réparation. Toutefois, si vous demandez à Hewlett Packard Enterprise de remplacer ces pièces, l'intervention peut ou non vous être facturée, selon le type de garantie applicable à votre produit.

REMARQUE: Certaines pièces Hewlett Packard Enterprise ne sont pas conçues pour permettre au client d'effectuer lui-même la réparation. Pour que la garantie puisse s'appliquer, Hewlett Packard Enterprise exige que le remplacement de la pièce soit effectué par un Mainteneur Agréé. Ces pièces sont identifiées par la mention "Non" dans le Catalogue illustré.

Les pièces CSR sont livrées le jour ouvré suivant, dans la limite des stocks disponibles et selon votre situation géographique. Si votre situation géographique le permet et que vous demandez une livraison le jour même ou dans les 4 heures, celle-ci vous sera facturée. Pour toute assistance, appelez le Centre d’assistance Hewlett Packard Enterprise pour qu’un technicien vous aide au téléphone Dans les documents envoyés avec la pièce de rechange CSR, Hewlett Packard Enterprise précise s'il est nécessaire de lui retourner la pièce défectueuse. Si c'est le cas, vous devez le faire dans le délai indiqué, généralement cinq (5) jours ouvrés. La pièce et sa documentation doivent être retournées dans l'emballage fourni. Si vous ne retournez pas la pièce défectueuse, Hewlett Packard Enterprise se réserve le droit de vous facturer les coûts de remplacement. Dans le cas d'une pièce CSR, Hewlett Packard Enterprise supporte l'ensemble des frais d'expédition et de retour, et détermine la société de courses ou le transporteur à utiliser.

Pour plus d'informations sur le programme CSR de Hewlett Packard Enterprise, contactez votre Mainteneur Agrée local. Pour plus d'informations sur ce programme en Amérique du Nord, consultez le site Web Hewlett Packard Enterprise (http://www.hpe.com/support/selfrepair).

Service de garantie "pièces seules"

Votre garantie limitée Hewlett Packard Enterprise peut inclure un service de garantie "pièces seules". Dans ce cas, les pièces de rechange fournies par Hewlett Packard Enterprise ne sont pas facturées.

Dans le cadre de ce service, la réparation des pièces CSR par le client est obligatoire. Si vous demandez à Hewlett Packard Enterprise de remplacer ces pièces, les coûts de déplacement et main d'œuvre du service vous seront facturés.

Riparazione da parte del cliente

Per abbreviare i tempi di riparazione e garantire una maggiore flessibilità nella sostituzione di parti difettose, i prodotti Hewlett Packard Enterprise sono realizzati con numerosi componenti che possono essere riparati direttamente dal cliente (CSR, Customer Self Repair). Se in fase di diagnostica Hewlett Packard Enterprise (o un centro di servizi o di assistenza Hewlett Packard Enterprise) identifica il guasto come riparabile mediante un ricambio CSR, Hewlett Packard Enterprise lo spedirà direttamente al cliente per la sostituzione. Vi sono due categorie di parti CSR:

- **Obbligatorie—**Parti che devono essere necessariamente riparate dal cliente. Se il cliente ne affida la riparazione ad Hewlett Packard Enterprise, deve sostenere le spese di spedizione e di manodopera per il servizio.
- **Opzionali—**Parti la cui riparazione da parte del cliente è facoltativa. Si tratta comunque di componenti progettati per questo scopo. Se tuttavia il cliente ne richiede la sostituzione ad Hewlett Packard Enterprise, potrebbe dover sostenere spese addizionali a seconda del tipo di garanzia previsto per il prodotto.

NOTA: alcuni componenti Hewlett Packard Enterprise non sono progettati per la riparazione da parte del cliente. Per rispettare la garanzia, Hewlett Packard Enterprise richiede che queste parti siano sostituite da un centro di assistenza autorizzato. Tali parti sono identificate da un "No" nel Catalogo illustrato dei componenti.

In base alla disponibilità e alla località geografica, le parti CSR vengono spedite con consegna entro il giorno lavorativo seguente. La consegna nel giorno stesso o entro quattro ore è offerta con un supplemento di costo solo in alcune zone. In caso di necessità si può richiedere l'assistenza telefonica di un addetto del centro di supporto tecnico Hewlett Packard Enterprise. Nel materiale fornito con una parte di ricambio CSR, Hewlett Packard Enterprise specifica se il cliente deve restituire dei component. Qualora sia richiesta la resa ad Hewlett Packard Enterprise del componente difettoso, lo si deve spedire ad Hewlett Packard Enterprise entro un determinato periodo di tempo, generalmente cinque (5) giorni lavorativi. Il componente difettoso deve essere restituito con la documentazione associata nell'imballo di spedizione fornito. La mancata restituzione del componente può comportare la fatturazione del ricambio da parte di Hewlett Packard Enterprise. Nel caso di riparazione da parte del cliente, Hewlett Packard Enterprise sostiene tutte le spese di spedizione e resa e sceglie il corriere/vettore da utilizzare.

Per ulteriori informazioni sul programma CSR di Hewlett Packard Enterprise, contattare il centro di assistenza di zona. Per il programma in Nord America fare riferimento al sito Web (http://www.hpe.com/support/selfrepair).

Servizio di garanzia per i soli componenti

La garanzia limitata Hewlett Packard Enterprise può includere un servizio di garanzia per i soli componenti. Nei termini di garanzia del servizio per i soli componenti, Hewlett Packard Enterprise fornirà gratuitamente le parti di ricambio.

Per il servizio di garanzia per i soli componenti è obbligatoria la formula CSR che prevede la riparazione da parte del cliente. Se il cliente invece richiede la sostituzione ad Hewlett Packard Enterprise dovrà sostenere le spese di spedizione e di manodopera per il servizio.

Customer Self Repair

Hewlett Packard Enterprise Produkte enthalten viele CSR-Teile (Customer Self Repair), um Reparaturzeiten zu minimieren und höhere Flexibilität beim Austausch defekter Bauteile zu ermöglichen. Wenn Hewlett Packard Enterprise (oder ein Hewlett Packard Enterprise Servicepartner) bei der Diagnose feststellt, dass das Produkt mithilfe eines CSR-Teils repariert werden kann, sendet Ihnen Hewlett Packard Enterprise dieses Bauteil zum Austausch direkt zu. CSR-Teile werden in zwei Kategorien unterteilt:

- **Zwingend**—Teile, für die das Customer Self Repair-Verfahren zwingend vorgegeben ist. Wenn Sie den Austausch dieser Teile von Hewlett Packard Enterprise vornehmen lassen, werden Ihnen die Anfahrt- und Arbeitskosten für diesen Service berechnet.
- **Optional**—Teile, für die das Customer Self Repair-Verfahren optional ist. Diese Teile sind auch für Customer Self Repair ausgelegt. Wenn Sie jedoch den Austausch dieser Teile von Hewlett Packard Enterprise vornehmen lassen möchten, können bei diesem Service je nach den für Ihr Produkt vorgesehenen Garantiebedingungen zusätzliche Kosten anfallen.

HINWEIS: Einige Hewlett Packard Enterprise Teile sind nicht für Customer Self Repair ausgelegt. Um den Garantieanspruch des Kunden zu erfüllen, muss das Teil von einem Hewlett Packard Enterprise Servicepartner ersetzt werden. Im illustrierten Teilekatalog sind diese Teile mit „No“ bzw. „Nein“ gekennzeichnet.

CSR-Teile werden abhängig von der Verfügbarkeit und vom Lieferziel am folgenden Geschäftstag geliefert. Für bestimmte Standorte ist eine Lieferung am selben Tag oder innerhalb von vier Stunden gegen einen Aufpreis verfügbar. Wenn Sie Hilfe benötigen, können Sie das Hewlett Packard Enterprise

Support Center anrufen und sich von einem Mitarbeiter per Telefon helfen lassen. Den Materialien von Hewlett Packard Enterprise, die mit einem CSR-Ersatzteil geliefert werden, können Sie entnehmen, ob das defekte Teil an Hewlett Packard Enterprise zurückgeschickt werden muss. Wenn es erforderlich ist, das defekte Teil an Hewlett Packard Enterprise zurückzuschicken, müssen Sie dies innerhalb eines vorgegebenen Zeitraums tun, in der Regel innerhalb von fünf (5) Geschäftstagen. Das defekte Teil muss mit der zugehörigen Dokumentation in der Verpackung zurückgeschickt werden, die im Lieferumfang enthalten ist. Wenn Sie das defekte Teil nicht zurückschicken, kann Hewlett Packard Enterprise Ihnen das Ersatzteil in Rechnung stellen. Im Falle von Customer Self Repair kommt Hewlett Packard Enterprise für alle Kosten für die Lieferung und Rücksendung auf und bestimmt den Kurier-/Frachtdienst.

Weitere Informationen über das Hewlett Packard Enterprise Customer Self Repair Programm erhalten Sie von Ihrem Servicepartner vor Ort. Informationen über das CSR-Programm in Nordamerika finden Sie auf der Hewlett Packard Enterprise Website unter (http://www.hpe.com/support/selfrepair).

Parts-only Warranty Service (Garantieservice ausschließlich für Teile)

Ihre Hewlett Packard Enterprise Garantie umfasst möglicherweise einen Parts-only Warranty Service (Garantieservice ausschließlich für Teile). Gemäß den Bestimmungen des Parts-only Warranty Service stellt Hewlett Packard Enterprise Ersatzteile kostenlos zur Verfügung.

Für den Parts-only Warranty Service ist das CSR-Verfahren zwingend vorgegeben. Wenn Sie den Austausch dieser Teile von Hewlett Packard Enterprise vornehmen lassen, werden Ihnen die Anfahrt- und Arbeitskosten für diesen Service berechnet.

Reparaciones del propio cliente

Los productos de Hewlett Packard Enterprise incluyen muchos componentes que el propio usuario puede reemplazar (Customer Self Repair, CSR) para minimizar el tiempo de reparación y ofrecer una mayor flexibilidad a la hora de realizar sustituciones de componentes defectuosos. Si, durante la fase de diagnóstico, Hewlett Packard Enterprise (o los proveedores o socios de servicio de Hewlett Packard Enterprise) identifica que una reparación puede llevarse a cabo mediante el uso de un componente CSR, Hewlett Packard Enterprise le enviará dicho componente directamente para que realice su sustitución. Los componentes CSR se clasifican en dos categorías:

- **Obligatorio**—Componentes cuya reparación por parte del usuario es obligatoria. Si solicita a Hewlett Packard Enterprise que realice la sustitución de estos componentes, tendrá que hacerse cargo de los gastos de desplazamiento y de mano de obra de dicho servicio.
- **Opcional**—Componentes cuya reparación por parte del usuario es opcional. Estos componentes también están diseñados para que puedan ser reparados por el usuario. Sin embargo, si precisa que Hewlett Packard Enterprise realice su sustitución, puede o no conllevar costes adicionales, dependiendo del tipo de servicio de garantía correspondiente al producto.

NOTA: Algunos componentes de Hewlett Packard Enterprise no están diseñados para que puedan ser reparados por el usuario. Para que el usuario haga valer su garantía, Hewlett Packard Enterprise pone como condición que un proveedor de servicios autorizado realice la sustitución de estos componentes. Dichos componentes se identifican con la palabra "No" en el catálogo ilustrado de componentes.

Según la disponibilidad y la situación geográfica, los componentes CSR se enviarán para que lleguen a su destino al siguiente día laborable. Si la situación geográfica lo permite, se puede solicitar la entrega en el mismo día o en cuatro horas con un coste adicional. Si precisa asistencia técnica, puede llamar al Centro de asistencia técnica de Hewlett Packard Enterprise y recibirá ayuda telefónica por parte de un técnico. Con el envío de materiales para la sustitución de componentes CSR, Hewlett Packard Enterprise especificará si los componentes defectuosos deberán devolverse a Hewlett Packard Enterprise. En aquellos casos en los que sea necesario devolver algún componente a Hewlett Packard Enterprise,

deberá hacerlo en el periodo de tiempo especificado, normalmente cinco días laborables. Los componentes defectuosos deberán devolverse con toda la documentación relacionada y con el embalaje de envío. Si no enviara el componente defectuoso requerido, Hewlett Packard Enterprise podrá cobrarle por el de sustitución. En el caso de todas sustituciones que lleve a cabo el cliente, Hewlett Packard Enterprise se hará cargo de todos los gastos de envío y devolución de componentes y escogerá la empresa de transporte que se utilice para dicho servicio.

Para obtener más información acerca del programa de Reparaciones del propio cliente de Hewlett Packard Enterprise, póngase en contacto con su proveedor de servicios local. Si está interesado en el programa para Norteamérica, visite la página web de Hewlett Packard Enterprise CSR (http://www.hpe.com/support/selfrepair).

Servicio de garantía exclusivo de componentes

La garantía limitada de Hewlett Packard Enterprise puede que incluya un servicio de garantía exclusivo de componentes. Según las condiciones de este servicio exclusivo de componentes, Hewlett Packard Enterprise le facilitará los componentes de repuesto sin cargo adicional alguno.

Para este servicio de garantía exclusivo de componentes, es obligatoria la sustitución de componentes por parte del usuario (CSR). Si solicita a Hewlett Packard Enterprise que realice la sustitución de estos componentes, tendrá que hacerse cargo de los gastos de desplazamiento y de mano de obra de dicho servicio.

Customer Self Repair

Veel onderdelen in Hewlett Packard Enterprise producten zijn door de klant zelf te repareren, waardoor de reparatieduur tot een minimum beperkt kan blijven en de flexibiliteit in het vervangen van defecte onderdelen groter is. Deze onderdelen worden CSR-onderdelen (Customer Self Repair) genoemd. Als Hewlett Packard Enterprise (of een Hewlett Packard Enterprise Service Partner) bij de diagnose vaststelt dat de reparatie kan worden uitgevoerd met een CSR-onderdeel, verzendt Hewlett Packard Enterprise dat onderdeel rechtstreeks naar u, zodat u het defecte onderdeel daarmee kunt vervangen. Er zijn twee categorieën CSR-onderdelen:

- **Verplicht**—Onderdelen waarvoor reparatie door de klant verplicht is. Als u Hewlett Packard Enterprise verzoekt deze onderdelen voor u te vervangen, worden u voor deze service reiskosten en arbeidsloon in rekening gebracht.
- **Optioneel**—Onderdelen waarvoor reparatie door de klant optioneel is. Ook deze onderdelen zijn ontworpen voor reparatie door de klant. Als u echter Hewlett Packard Enterprise verzoekt deze onderdelen voor u te vervangen, kunnen daarvoor extra kosten in rekening worden gebracht, afhankelijk van het type garantieservice voor het product.

OPMERKING: Sommige Hewlett Packard Enterprise onderdelen zijn niet ontwikkeld voor reparatie door de klant. In verband met de garantievoorwaarden moet het onderdeel door een geautoriseerde Service Partner worden vervangen. Deze onderdelen worden in de geïllustreerde onderdelencatalogus aangemerkt met "Nee".

Afhankelijk van de leverbaarheid en de locatie worden CSR-onderdelen verzonden voor levering op de eerstvolgende werkdag. Levering op dezelfde dag of binnen vier uur kan tegen meerkosten worden aangeboden, indien dit mogelijk is gezien de locatie. Indien assistentie is gewenst, belt u het Hewlett Packard Enterprise Support Center om via de telefoon ondersteuning van een technicus te ontvangen. Hewlett Packard Enterprise vermeldt in de documentatie bij het vervangende CSR-onderdeel of het defecte onderdeel aan Hewlett Packard Enterprise moet worden geretourneerd. Als het defecte onderdeel aan Hewlett Packard Enterprise moet worden teruggezonden, moet u het defecte onderdeel binnen een bepaalde periode, gewoonlijk vijf (5) werkdagen, retourneren aan Hewlett Packard Enterprise. Het defecte onderdeel moet met de bijbehorende documentatie worden geretourneerd in het meegeleverde verpakkingsmateriaal. Als u het defecte onderdeel niet terugzendt, kan Hewlett Packard

Enterprise u voor het vervangende onderdeel kosten in rekening brengen. Bij reparatie door de klant betaalt Hewlett Packard Enterprise alle verzendkosten voor het vervangende en geretourneerde onderdeel en kiest Hewlett Packard Enterprise zelf welke koerier/transportonderneming hiervoor wordt gebruikt.

Neem contact op met een Service Partner voor meer informatie over het Customer Self Repair programma van Hewlett Packard Enterprise. Informatie over Service Partners vindt u op de Hewlett Packard Enterprise website (http://www.hpe.com/support/selfrepair).

Garantieservice "Parts Only"

Het is mogelijk dat de Hewlett Packard Enterprise garantie alleen de garantieservice "Parts Only" omvat. Volgens de bepalingen van de Parts Only garantieservice zal Hewlett Packard Enterprise kosteloos vervangende onderdelen ter beschikking stellen.

Voor de Parts Only garantieservice is vervanging door CSR-onderdelen verplicht. Als u Hewlett Packard Enterprise verzoekt deze onderdelen voor u te vervangen, worden u voor deze service reiskosten en arbeidsloon in rekening gebracht

Reparo feito pelo cliente

Os produtos da Hewlett Packard Enterprise são projetados com muitas peças para reparo feito pelo cliente (CSR) de modo a minimizar o tempo de reparo e permitir maior flexibilidade na substituição de peças com defeito. Se, durante o período de diagnóstico, a Hewlett Packard Enterprise (ou fornecedores/parceiros da Hewlett Packard Enterprise) concluir que o reparo pode ser efetuado pelo uso de uma peça CSR, a Hewlett Packard Enterprise enviará a peça diretamente ao cliente. Há duas categorias de peças CSR:

- **Obrigatória**—Peças cujo reparo feito pelo cliente é obrigatório. Se desejar que a Hewlett Packard Enterprise substitua essas peças, serão cobradas as despesas de transporte e mão-de-obra do serviço.
- **Opcional**—Peças cujo reparo feito pelo cliente é opcional. Essas peças também são projetadas para o reparo feito pelo cliente. No entanto, se desejar que a Hewlett Packard Enterprise as substitua, pode haver ou não a cobrança de taxa adicional, dependendo do tipo de serviço de garantia destinado ao produto.

OBSERVAÇÃO: Algumas peças da Hewlett Packard Enterprise não são projetadas para o reparo feito pelo cliente. A fim de cumprir a garantia do cliente, a Hewlett Packard Enterprise exige que um técnico autorizado substitua a peça. Essas peças estão identificadas com a marca "No" (Não), no catálogo de peças ilustrado.

Conforme a disponibilidade e o local geográfico, as peças CSR serão enviadas no primeiro dia útil após o pedido. Onde as condições geográficas permitirem, a entrega no mesmo dia ou em quatro horas pode ser feita mediante uma taxa adicional. Se precisar de auxílio, entre em contato com o Centro de suporte técnico da Hewlett Packard Enterprise para que um técnico o ajude por telefone. A Hewlett Packard Enterprise especifica nos materiais fornecidos com a peça CSR de reposição se a peça com defeito deve ser devolvida à Hewlett Packard Enterprise. Nos casos em que isso for necessário, é preciso enviar a peça com defeito à Hewlett Packard Enterprise, você deverá enviar a peça com defeito de volta para a Hewlett Packard Enterprise dentro do período de tempo definido, normalmente em 5 (cinco) dias úteis. A peça com defeito deve ser enviada com a documentação correspondente no material de transporte fornecido. Caso não o faça, a Hewlett Packard Enterprise poderá cobrar a reposição. Para as peças de reparo feito pelo cliente, a Hewlett Packard Enterprise paga todas as despesas de transporte e de devolução da peça e determina a transportadora/serviço postal a ser utilizado.

Para obter mais informações sobre o programa de reparo feito pelo cliente da Hewlett Packard Enterprise, entre em contato com o fornecedor de serviços local. Para o programa norte-americano, visite o site da Hewlett Packard Enterprise (http://www.hpe.com/support/selfrepair).

Serviço de garantia apenas para peças

A garantia limitada da Hewlett Packard Enterprise pode incluir um serviço de garantia apenas para peças. Segundo os termos do serviço de garantia apenas para peças, a Hewlett Packard Enterprise fornece as peças de reposição sem cobrar nenhuma taxa.

No caso desse serviço, a substituição de peças CSR é obrigatória. Se desejar que a Hewlett Packard Enterprise substitua essas peças, serão cobradas as despesas de transporte e mão-de-obra do serviço.

カスタマーセルフリペア

修理時間を短縮し、故障部品の交換における高い柔軟性を確保するために、Hewlett Packard Enterprise製品には多数のカスタマーセルフリペア（CSR）部品があります。診断の際に、CSR部品を使用すれば修理ができるとHewlett Packard Enterprise（Hewlett Packard EnterpriseまたはHewlett Packard Enterprise正規保守代理店）が判断した場合、Hewlett Packard Enterpriseはその部品を直接、お客様に発送し、お客様に交換していただきます。CSR部品には以下の2種類があります。

- **必須** - カスタマーセルフリペアが必須の部品。当該部品について、もしもお客様がHewlett Packard Enterpriseに交換作業を依頼される場合には、その修理サービスに関する交通費および人件費がお客様に請求されます。
- **任意** - カスタマーセルフリペアが任意である部品。この部品もカスタマーセルフリペア用です。当該部品について、もしもお客様がHewlett Packard Enterpriseに交換作業を依頼される場合には、お買い上げの製品に適用される保証サービス内容の範囲内においては、別途費用を負担していただくことなく保証サービスを受けることができます。

注：Hewlett Packard Enterprise製品の一部の部品は、カスタマーセルフリペアの対象外です。製品の保証を継続するためには、Hewlett Packard EnterpriseまたはHewlett Packard Enterprise正規保守代理店による交換作業が必須となります。部品カタログには、当該部品がカスタマーセルフリペア除外品である旨が記載されています。

部品供給が可能な場合、地域によっては、CSR部品を翌営業日に届くように発送します。また、地域によっては、追加費用を負担いただくことにより同日または4時間以内に届くように発送することも可能な場合があります。サポートが必要なときは、Hewlett Packard Enterpriseサポートセンターに電話していただければ、技術者が電話でアドバイスします。交換用のCSR部品または同梱物には、故障部品をHewlett Packard Enterpriseに返送する必要があるかどうかが表示されています。故障部品をHewlett Packard Enterpriseに返送する必要がある場合は、指定期限内（通常は5営業日以内）に故障部品をHewlett Packard Enterpriseに返送してください。故障部品を返送する場合は、届いた時の梱包箱に関連書類とともに入れてください。故障部品を返送しない場合、Hewlett Packard Enterpriseから部品費用が請求されます。カスタマーセルフリペアの際には、Hewlett Packard Enterpriseは送料および部品返送費を全額負担し、使用する宅配便会社や運送会社を指定します。

部品のみ保証サービス

Hewlett Packard Enterprise保証サービスには、部品のみ保証サービスが適用される場合があります。このサービスでは、交換部品は無償で提供されます。

部品のみ保証サービスにおいては、CSR部品をお客様により交換作業していただくことが必須になります。当該部品について、もしもお客様がHewlett Packard Enterpriseに交換作業を依頼される場合には、その修理サービスに関する交通費および人件費がお客様のご負担となります。

客户自行维修

Hewlett Packard Enterprise 产品提供许多客户自行维修 (CSR) 部件，以尽可能缩短维修时间和在更换缺陷部件方面提供更大的灵活性。如果在诊断期间 Hewlett Packard Enterprise（或Hewlett Packard Enterprise 服务提供商或服务合作伙伴）确定可以通过使用 CSR 部件完成维修，Hewlett Packard Enterprise 将直接把该部件发送给您进行更换。有两类 CSR 部件：

- **强制性的** — 要求客户必须自行维修的部件。如果您请求 Hewlett Packard Enterprise 更换这些部件，则必须为该服务支付差旅费和人工费用。
- **可选的** — 客户可以选择是否自行维修的部件。这些部件也是为客户自行维修设计的。不过，如果您要求 Hewlett Packard Enterprise 为您更换这些部件，则根据为您的产品指定的保修服务类型，Hewlett Packard Enterprise 可能收取或不再收取任何附加费用。

注：某些 Hewlett Packard Enterprise 部件的设计并未考虑客户自行维修。为了满足客户保修的需要，Hewlett Packard Enterprise 要求授权服务提供商更换相关部件。这些部件在部件图解目录中标记为“否”。

CSR 部件将在下一个工作日发运（取决于备货情况和允许的地理范围）。在允许的地理范围内，可在当天或四小时内发运，但要收取额外费用。如果需要帮助，您可以致电 Hewlett Packard Enterprise 技术支持中心，将会有技术人员通过电话为您提供帮助。Hewlett Packard Enterprise 会在随更换的 CSR 部件发运的材料中指明是否必须将有缺陷的部件返还给 Hewlett Packard Enterprise。如果要求您将有缺陷的部件返还给 Hewlett Packard Enterprise，那么您必须在规定的期限内（通常是五 (5) 个工作日）将缺陷部件发给 Hewlett Packard Enterprise。有缺陷的部件必须随所提供的发运材料中的相关文件一起返还。如果未能送还有缺陷的部件，Hewlett Packard Enterprise 可能会要求您支付更换费用。客户自行维修时，Hewlett Packard Enterprise 将承担所有相关运输和部件返回费用，并指定快递商/承运商。

有关 Hewlett Packard Enterprise 客户自行维修计划的详细信息，请与您当地的服务提供商联系。有关北美地区的计划，请访问 Hewlett Packard Enterprise 网站 (http://www.hpe.com/support/selfrepair)。

仅部件保修服务

您的 Hewlett Packard Enterprise 有限保修服务可能涉及仅部件保修服务。根据仅部件保修服务条款的规定，Hewlett Packard Enterprise 将免费提供更换的部件。

仅部件保修服务要求进行 CSR 部件更换。如果您请求 Hewlett Packard Enterprise 更换这些部件，则必须为该服务支付差旅费和人工费用。

客戶自行維修

Hewlett Packard Enterprise 產品設計了許多「客戶自行維修」(CSR) 的零件以減少維修時間，並且使得更換瑕疵零件時能有更大的彈性。如果在診斷期間，Hewlett Packard Enterprise (或 Hewlett Packard Enterprise 服務供應商或維修夥伴) 辨認出此項維修工作可以藉由使用 CSR 零件來完成，則 Hewlett Packard Enterprise 將直接寄送該零件給您作更換。CSR 零件分為兩種類別：

- **強制的** — 客戶自行維修所使用的零件是強制性的。如果您要求 Hewlett Packard Enterprise 更換這些零件，Hewlett Packard Enterprise 將會向您收取此服務所需的外出費用與勞動成本。
- **選購的** — 客戶自行維修所使用的零件是選購的。這些零件也設計用於客戶自行維修之用。不過，如果您要求 Hewlett Packard Enterprise 為您更換，則可能需要也可能不需要負擔額外的費用，端視針對此產品指定的保固服務類型而定。

備註：某些 Hewlett Packard Enterprise 零件沒有消費者可自行維修的設計。為符合客戶保固，Hewlett Packard Enterprise 需要授權的服務供應商更換零件。這些零件在圖示的零件目錄中，被標示為「否」。

基於材料取得及環境允許的情況下，CSR 零件將於下一個工作日以快遞寄送。在環境的允許下當天或四小時內送達，則可能需要額外的費用。若您需要協助，可致電 Hewlett Packard Enterprise 支援中心，會有一位技術人員透過電話來協助您。不論損壞的零件是否必須退回，Hewlett Packard Enterprise 皆會在與 CSR 替換零件一起運送的材料中註明。若要將損壞的零件退回 Hewlett Packard Enterprise，您必須在指定的一段時間內 (通常為五 (5) 個工作天)，將損壞的零件寄回 Hewlett Packard Enterprise。損壞的零件必須與寄送資料中隨附的相關技術文件一併退還。如果無法退還損壞的零件，Hewlett Packard Enterprise 可能要向您收取替換費用。針對客戶自行維修情形，Hewlett Packard Enterprise 將負責所有運費及零件退還費用，並指定使用何家快遞/貨運公司。

如需 Hewlett Packard Enterprise 的 CSR 方案詳細資訊，請連絡您當地的服務供應商。至於北美方案，請參閱 Hewlett Packard Enterprise 的 CSR 網站frepair (http://www.hpe.com/support/selfrepair)。

僅限零件的保固服務

您的「Hewlett Packard Enterprise 有限保固」可能包含僅限零件的保固服務。在僅限零件的保固服務情況下，Hewlett Packard Enterprise 將免費提供替換零件。

針對僅限零件的保固服務，CSR 零件替換是強制性的。如果您要求 Hewlett Packard Enterprise 更換這些零件，Hewlett Packard Enterprise 將會向您收取此服務所需的外出費用與勞動成本。

고객 셀프 수리

Hewlett Packard Enterprise 제품은 수리 시간을 최소화하고 결함이 있는 부품 교체 시 더욱 융통성을 발휘할 수 있도록 하기 위해 고객 셀프 수리(CSR) 부품을 다량 사용하여 설계되었습니다. 진단 기간 동안 Hewlett Packard Enterprise(또는 Hewlett Packard Enterprise 서비스 공급업체 또는 서비스 협력업체)에서 CSR 부품을 사용하여 수리가 가능하다고 판단되면 Hewlett Packard Enterprise는 해당 부품을 바로 사용자에게 보내어 사용자가 교체할 수 있도록 합니다. CSR 부품에는 두 가지 종류가 있습니다.

- **필수 -** 고객 셀프 수리가 의무 사항인 필수 부품. 사용자가 Hewlett Packard Enterprise에 이 부품의 교체를 요청할 경우 이 서비스에 대한 출장비 및 작업비가 청구됩니다.
- **선택 사항 -** 고객 셀프 수리가 선택 사항인 부품. 이 부품들도 고객 셀프 수리가 가능하도록 설계되었습니다. 하지만 사용자가 Hewlett Packard Enterprise에 이 부품의 교체를 요청할 경우 사용자가 구입한 제품에 해당하는 보증 서비스 유형에 따라 추가 비용 없이 교체가 가능할 수 있습니다.

참고: 일부 Hewlett Packard Enterprise 부품은 고객 셀프 수리가 불가능하도록 설계되었습니다. Hewlett Packard Enterprise는 만족스러운 고객 보증을 위해 공인 서비스 제공업체를 통해 부품을 교체하도록 하고 있습니다. 이러한 부품들은 Illustrated Parts Catalog에 "No"라고 표시되어 있습니다.

CSR 부품은 재고 상태와 지리적 조건이 허용하는 경우 다음 영업일 납품이 가능하도록 배송이 이루어집니다. 지리적 조건이 허용하는 경우 추가 비용이 청구되는 조건으로 당일 또는 4시간 배송이 가능할 수도 있습니다. 도움이 필요하시면 Hewlett Packard Enterprise Support Center로 전화하십시오. 전문 기술자가 전화로 도움을 줄 것입니다. Hewlett Packard Enterprise는 결함이 발생한 부품을 Hewlett Packard Enterprise로 반환해야 하는지 여부를 CSR 교체 부품과 함께 배송된 자료에 지정합니다. 결함이 발생한 부품을 Hewlett Packard Enterprise로 반환해야 하는 경우에는 지정된 기간 내(통상 영업일 기준 5일)에 Hewlett Packard Enterprise로 반환해야 합니다. 이때 결함이 발생한 부품은 제공된 포장 재료에 넣어 관련 설명서와 함께 반환해야 합니다. 결함이 발생한 부품을 반환하지 않는 경우 Hewlett Packard Enterprise가 교체 부품에 대해 비용을 청구할 수 있습니다. 고객 셀프 수리의 경우, Hewlett Packard Enterprise는 모든 운송 및 부품 반환 비용을 부담하며 이용할 운송업체 및 택배 서비스를 결정합니다.

Hewlett Packard Enterprise CSR 프로그램에 대한 자세한 내용은 가까운 서비스 제공업체에 문의하십시오. 북미 지역의 프로그램에 대해서는 Hewlett Packard Enterprise CSR 웹 사이트(http://www.hpe.com/support/selfrepair)를 참조하십시오.

부품 제공 보증 서비스

Hewlett Packard Enterprise 제한 보증에는 부품 제공 보증 서비스가 포함될 수 있습니다. 이러한 경우 Hewlett Packard Enterprise는 부품 제공 보증 서비스의 조건에 따라 교체 부품만을 무료로 제공합니다.

부품 제공 보증 서비스 제공 시 CSR 부품 교체는 의무 사항입니다. 사용자가 Hewlett Packard Enterprise에 이 부품의 교체를 요청할 경우 이 서비스에 대한 출장비 및 작업비가 청구됩니다.

Illustrated parts catalog

Mechanical components

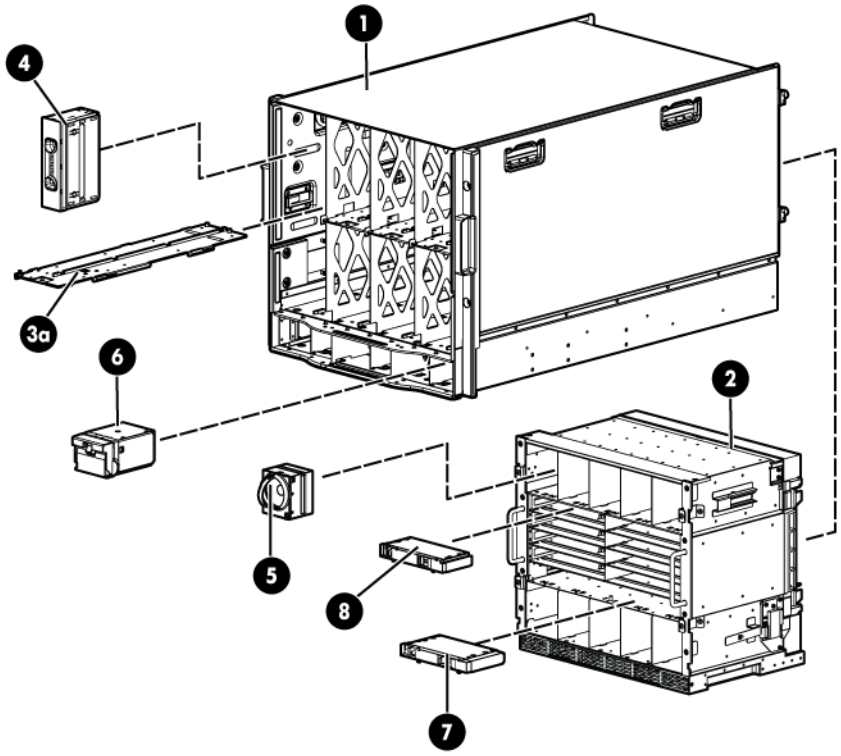

Item	Description	Spare part number	Customer self repair (on page 5)
1	HPE BladeSystem c7000 enclosure	—	—
2	Rear cage	—	—
3	Hardware kit	432463-001	Mandatory[1]
	a) Device bay shelf	—	—
	b) Vertical cable cover*	—	—
	c) Left LCD cap*	—	—
4	Device bay blank	414051-001	Mandatory[1]
5	Fan blank	414052-001	Mandatory[1]
6	Power supply blank	416043-001	Mandatory[1]
7	Onboard Administrator blank	414054-001	Mandatory[1]
8	Interconnect blank	414053-001	Mandatory[1]
9	Plastics kit*	414063-001	Mandatory[1]
	a) Left handle cover	—	—
	b) Right handle cover	—	—
	c) Screws for endcaps and handles, rear cage (10)	—	—

Item	Description	Spare part number	Customer self repair (on page 5)
	d) Rear cage endcap, top	—	—
	e) Enclosure bezel ear, right	—	—
	f) Enclosure bezel ear, left	—	—
10	Enclosure right front bezel plastics* **	709864-001	Mandatory[1]
11	Enclosure left front bezel plastics* **	709863-001	Mandatory[1]
12	Rackmounting kit*	432461-001	Mandatory[1]

*Not shown.
**Platinum models only.
[1]Mandatory—Parts for which customer self repair is mandatory. If you request Hewlett Packard Enterprise to replace these parts, you will be charged for the travel and labor costs of this service.
[2]Optional—Parts for which customer self repair is optional. These parts are also designed for customer self repair. If, however, you require that Hewlett Packard Enterprise replace them for you, there may or may not be additional charges, depending on the type of warranty service designated for your product.
[3]No—Some Hewlett Packard Enterprise parts are not designed for customer self repair. In order to satisfy the customer warranty, Hewlett Packard Enterprise requires that an authorized service provider replace the part. These parts are identified as "No" in the Illustrated Parts Catalog.

[1]Obligatoire—Pièces pour lesquelles le client doit procéder lui-même aux réparations. Si vous demandez à Hewlett Packard Enterprise de procéder au remplacement de ces pièces, les frais de transport et de main d'œuvre pour ce service vous seront facturés.
[2]Facultatif—Pièces pour lesquelles une réparation par le client est facultative. Ces pièces sont également conçues pour que le client puisse procéder lui-même aux réparations. Cependant, les frais supplémentaires engendrés par le remplacement de ces pièces par Hewlett Packard Enterprise dépendent du type de service de garantie désigné pour votre produit.
[3]Non—Certaines pièces Hewlett Packard Enterprise ne sont pas conçues pour être remplacées par le client. Afin de se conformer aux exigences de la garantie la garantie du client, Hewlett Packard Enterprise demande à un fournisseur de services agréé de procéder au remplacement de la pièce. Ces pièces sont signaléespar le mot « Non » dans le Catalogue de pièces illustré.

[1]Obbligatorio—Parti per le quali il cliente è tenuto a effettuare autonomamente la riparazione. Se si richiede l'intervento di Hewlett Packard Enterprise per la sostituzione di queste parti, al cliente verranno addebitate le spese di viaggio e manodopera dell'operazione.
[2]Facoltativo—Parti per le quali la riparazione in autonomia da parte del cliente è facoltativa. Queste parti sono progettate per consentire anche la riparazione da parte del cliente. Tuttavia, se il cliente richiedel'intervento di Hewlett Packard Enterprise per la sostituzione, potrebbero essere addebitate spese aggiuntive a seconda del tipo di garanzia in assistenza previsto per il prodotto.
[3]No—Alcune parti Hewlett Packard Enterprise non sono progettate la riparazione in autonomia da parte del cliente. In base a quanto previsto dalla garanzia per il cliente, Hewlett Packard Enterprise richiede l'intervento di un tecnico autorizzato per la sostituzione della parte. Queste parti sono contrassegnate con"No"nel catalogo parti illustrato.

[1]Zwingend—Teile, für die das Customer Self Repair-Verfahren zwingend vorgegeben ist. Wenn Sie den Austausch dieser Teile von Hewlett Packard Enterprisevornehmen lassen, werden Ihnen die Anfahrt- und Arbeitskosten für diesen Service berechnet.
[2]Optional—Teile, für die das Customer Self Repair-Verfahren optional ist. Diese Teile sind auch für Customer Self Repair ausgelegt. Wenn Sie jedoch den Austausch dieser Teile von Hewlett Packard Enterprisevornehmen lassen möchten, können bei diesem Service je nach den für Ihr Produkt vorgesehenen Garantiebedingungen zusätzliche Kosten anfallen.
[3]Nein—Einige Hewlett Packard Enterprise Teile sind nicht für Customer Self Repair ausgelegt. Um den Garantieanspruch des Kunden zu erfüllen, muss das Teil von einem Hewlett Packard Enterprise Servicepartner ersetzt werden. Im illustrierten Teilekatalog sind diese Teile mit „No“ bzw. „Nein“ gekennzeichnet.

[1]Obligatorio—Componentes cuya reparación por parte del usuario es obligatoria. Si solicita a Hewlett Packard Enterprise que realice la sustitución de estos componentes, tendrá que hacerse cargo de los gastos de desplazamiento y de mano de obra de dicho servicio.
[2]Opcional—Componentes cuya reparación por parte del usuario es opcional. Estos componentes también están diseñados para que puedan ser reparados por el usuario. Sin embargo, si precisa que Hewlett Packard Enterprise realice su sustitución, puede o no conllevar costes adicionales, dependiendo del tipo de servicio de garantía correspondiente al producto.

[3]No—Algunos componentes de Hewlett Packard Enterprise no están diseñados para que puedan ser reparados por el usuario. Para que el usuario haga valer su garantía, Hewlett Packard Enterprise pone como condición que un proveedor de servicios autorizado realice la sustitución de estos componentes. Dichos componentes se identifican con la palabra "No" en el catálogo ilustrado de componentes.

[1]Verplicht—Onderdelen die de klant zelf moet vervangen. Als u Hewlett Packard Enterprise vraagt deze onderdelen te vervangen, worden er reis- en arbeidskosten voor deze service in rekening gebracht.
[2]Optioneel—Onderdelen die de klant zelf kan vervangen. Deze onderdelen zijn ook ontworpen om door de klant zelf te worden vervangen. Als u Hewlett Packard Enterprise verzoekt om deze te vervangen, kan het zijn dat hiervoor extra kosten in rekening worden gebracht, afhankelijk van het soort garantie dat op uw product van toepassing is.
[3]Geen—Sommige onderdelen van Hewlett Packard Enterprise zijn niet ontworpen om door de klant zelf te worden vervangen. Om te voldoen aan de garantievoorwaarden eist Hewlett Packard Enterprise dat een geautoriseerde serviceverlener het onderdeel vervangt. Deze onderdelen worden aangeduid met 'Geen' in de geïllustreerde onderdelencatalogus.

[1]Obrigatório—Peças cujo reparo feito pelo cliente é obrigatório. Se desejar que a Hewlett Packard Enterprise substitua essas peças, serão cobradas as despesas de transporte e mão-de-obra do serviço.
[2]Opcional—Peças cujo reparo feito pelo cliente é opcional. Essas peças também são projetadas para o reparo feito pelo cliente. No entanto, se desejar que a Hewlett Packard Enterprise as substitua, pode haver ou não a cobrança de taxa adicional, dependendo do tipo de serviço de garantia destinado ao produto.
[3]Não—Algumas peças da Hewlett Packard Enterprise não são projetadas para o reparo feito pelo cliente. A fim de cumprir a garantia do cliente, a Hewlett Packard Enterprise exige que um técnico autorizado substitua a peça. Essas peças estão identificadas com a marca "No" (Não), no catálogo de peças ilustrado.

[1]Mandatory：必須 — カスタマーセルフリペアが必須の部品。当該部品について、もしもお客様がHewlett Packard Enterpriseに交換作業を依頼される場合には、その修理サービスに関する交通費および人件費がお客様に請求されます。
[2]Optional：任意 — カスタマーセルフリペアが任意である部品。この部品もカスタマーセルフリペア用です。当該部品について、もしもお客様がHewlett Packard Enterpriseに交換作業を依頼される場合には、お買い上げの製品に適用される保証サービス内容の範囲内においては、別途費用を負担していただくことなく保証サービスを受けることができます。
[3]No：除外 — Hewlett Packard Enterprise製品の一部の部品は、カスタマーセルフリペアの対象外です。製品の保証を継続するためには、Hewlett Packard EnterpriseまたはHewlett Packard Enterprise正規保守代理店による交換作業が必須となります。部品カタログには、当該部品がカスタマーセルフリペア除外品である旨が記載されています。

[1]Mandatory — 客户必须自行维修的部件。如果您请求 Hewlett Packard Enterprise 更换这些部件，则必须为该服务支付差旅费和人工费用。
[2]Optional — 客户可以选择是否自行维修的部件。这些部件也是为客户自行维修设计的。不过，如果您要求 Hewlett Packard Enterprise 为您更换这些部件，则根据为您的产品指定的保修服务类型，Hewlett Packard Enterprise 可能收取或不再收取任何附加费用。
[3]No — 某些 Hewlett Packard Enterprise 部件的设计并未考虑客户自行维修。为了满足客户保修的需要，Hewlett Packard Enterprise 要求授权服务提供商更换相关部件。这些部件在部件图解目录中标记为“否”。

[1]Mandatory — 客戶自行維修所使用的零件是強制性的。如果您要求 Hewlett Packard Enterprise 更換這些零件，Hewlett Packard Enterprise 將會向您收取此服務所需的外出費用與勞動成本。
[2]Optional — 客戶自行維修所使用的零件是選購的。這些零件也設計用於客戶自行維修之用。不過，如果您要求 Hewlett Packard Enterprise 為您更換，則可能需要也可能不需要負擔額外的費用，端視針對此產品指定的保固服務類型而定。
[3]No — 某些 Hewlett Packard Enterprise 零件沒有消費者可自行維修的設計。為符合客戶保固，Hewlett Packard Enterprise 需要授權的服務供應商更換零件。這些零件在圖示的零件目錄中，被標示為「否」。

[1]Mandatory — 고객 셀프 수리가 의무 사항인 필수 부품. 사용자가 Hewlett Packard Enterprise에 이 부품의 교체를 요청할 경우 해당 서비스에 대한 출장비 및 작업비가 청구됩니다.
[2]Optional — 고객 셀프 수리가 선택 사항인 부품. 이러한 부품들도 고객 셀프 수리가 가능하도록 설계되었습니다. 하지만 사용자가 Hewlett Packard Enterprise에 이러한 부품의 교체를 요청할 경우 사용자가 구입한 제품에 해당하는 보증 서비스 유형에 따라 추가 비용 없이 교체가 가능할 수 있습니다.
[3]No — 일부 Hewlett Packard Enterprise 부품은 고객 셀프 수리가 불가능하도록 설계되었습니다. Hewlett Packard Enterprise는 만족스러운 고객 보증을 위해 공인 서비스 제공업체를 통해 부품을 교체하도록 요구하고 있습니다. 이러한 부품들은 Illustrated Parts Catalog에 “No”라고 표시되어 있습니다.

System components

Front system components

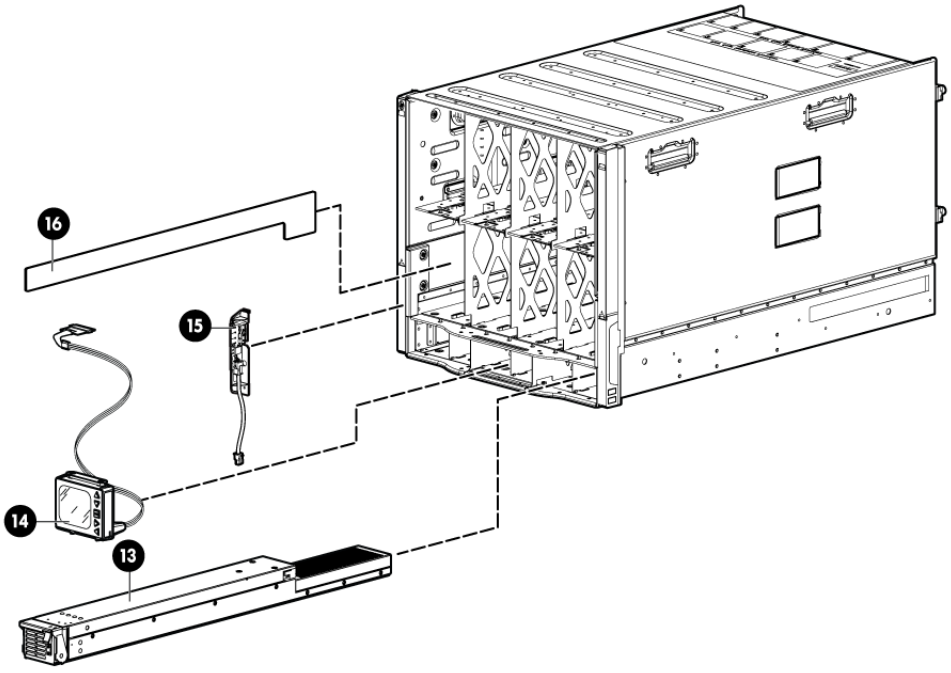

Item	Description	Spare part number	Customer self repair (on page 5)
13	Power supply	—	—
	a) BladeSystem c7000 power supply	411099-001	Mandatory[1]
	b) HPE 2400W High Efficiency power supply*	500242-001	Mandatory[1]
	c) HPE BL7000 2400W Platinum power supply*	588733-001	Mandatory[1]
	d) BladeSystem c7000 DC power supply*	544660-001	Mandatory[1]
14	HPE BladeSystem Insight Display	—	—
	a) 7.62 (3.00 in) Insight Display	441203-001	No[3]
	b) 7.62 cm (3.00 in) Insight Display (RoHS)*	519349-001	No[3]
	c) 5.08 cm (2.00 in) Insight Display*	415839-001	No[3]
15	Location discovery services board**	709865-001	Mandatory[1]
16	Insight Display pass-thru board	—	—
	a) Insight Display pass-thru board	432462-001	No[3]
	b) Insight Display LCD pass-thru board (RoHS)*	519348-001	No[3]
	c) Insight Display pass-thru board* **	709866-001	No[3]

* Not shown
** Platinum models only
[1]Mandatory—Parts for which customer self repair is mandatory. If you request Hewlett Packard Enterprise to replace these parts, you will be charged for the travel and labor costs of this service.

[2]Optional—Parts for which customer self repair is optional. These parts are also designed for customer self repair. If, however, you require that Hewlett Packard Enterprise replace them for you, there may or may not be additional charges, depending on the type of warranty service designated for your product.
[3]No—Some Hewlett Packard Enterprise parts are not designed for customer self repair. In order to satisfy the customer warranty, Hewlett Packard Enterprise requires that an authorized service provider replace the part. These parts are identified as "No" in the Illustrated Parts Catalog.

[1]Obligatoire—Pièces pour lesquelles le client doit procéder lui-même aux réparations. Si vous demandez à Hewlett Packard Enterprise de procéder au remplacement de ces pièces, les frais de transport et de main d'œuvre pour ce service vous seront facturés.
[2]Facultatif—Pièces pour lesquelles une réparation par le client est facultative. Ces pièces sont également conçues pour que le client puisse procéder lui-même aux réparations. Cependant, les frais supplémentaires engendrés par le remplacement de ces pièces par Hewlett Packard Enterprise dépendent du type de service de garantie désigné pour votre produit.
[3]Non—Certaines pièces Hewlett Packard Enterprise ne sont pas conçues pour être remplacées par le client. Afin de se conformer aux exigences de la garantie la garantie du client, Hewlett Packard Enterprise demande à un fournisseur de services agréé de procéder au remplacement de la pièce. Ces pièces sont signaléespar le mot « Non » dans le Catalogue de pièces illustré.

[1]Obbligatorio—Parti per le quali il cliente è tenuto a effettuare autonomamente la riparazione. Se si richiede l'intervento di Hewlett Packard Enterprise per la sostituzione di queste parti, al cliente verranno addebitate le spese di viaggio e manodopera dell'operazione.
[2]Facoltativo—Parti per le quali la riparazione in autonomia da parte del cliente è facoltativa. Queste parti sono progettate per consentire anche la riparazione da parte del cliente. Tuttavia, se il cliente richiedel'intervento di Hewlett Packard Enterprise per la sostituzione, potrebbero essere addebitate spese aggiuntive a seconda del tipo di garanzia in assistenza previsto per il prodotto.
[3]No—Alcune parti Hewlett Packard Enterprise non sono progettate la riparazione in autonomia da parte del cliente. In base a quanto previsto dalla garanzia per il cliente, Hewlett Packard Enterprise richiede l'intervento di un tecnico autorizzato per la sostituzione della parte. Queste parti sono contrassegnate con"No"nel catalogo parti illustrato.

[1]Zwingend—Teile, für die das Customer Self Repair-Verfahren zwingend vorgegeben ist. Wenn Sie den Austausch dieser Teile von Hewlett Packard Enterprisevornehmen lassen, werden Ihnen die Anfahrt- und Arbeitskosten für diesen Service berechnet.
[2]Optional—Teile, für die das Customer Self Repair-Verfahren optional ist. Diese Teile sind auch für Customer Self Repair ausgelegt. Wenn Sie jedoch den Austausch dieser Teile von Hewlett Packard Enterprisevornehmen lassen möchten, können bei diesem Service je nach den für Ihr Produkt vorgesehenen Garantiebedingungen zusätzliche Kosten anfallen.
[3]Nein—Einige Hewlett Packard Enterprise Teile sind nicht für Customer Self Repair ausgelegt. Um den Garantieanspruch des Kunden zu erfüllen, muss das Teil von einem Hewlett Packard Enterprise Servicepartner ersetzt werden. Im illustrierten Teilekatalog sind diese Teile mit „No“ bzw. „Nein“ gekennzeichnet.

[1]Obligatorio—Componentes cuya reparación por parte del usuario es obligatoria. Si solicita a Hewlett Packard Enterprise que realice la sustitución de estos componentes, tendrá que hacerse cargo de los gastos de desplazamiento y de mano de obra de dicho servicio.
[2]Opcional—Componentes cuya reparación por parte del usuario es opcional. Estos componentes también están diseñados para que puedan ser reparados por el usuario. Sin embargo, si precisa que Hewlett Packard Enterprise realice su sustitución, puede o no conllevar costes adicionales, dependiendo del tipo de servicio de garantía correspondiente al producto.
[3]No—Algunos componentes de Hewlett Packard Enterprise no están diseñados para que puedan ser reparados por el usuario. Para que el usuario haga valer su garantía, Hewlett Packard Enterprise pone como condición que un proveedor de servicios autorizado realice la sustitución de estos componentes. Dichos componentes se identifican con la palabra "No" en el catálogo ilustrado de componentes.

[1]Verplicht—Onderdelen die de klant zelf moet vervangen. Als u Hewlett Packard Enterprise vraagt deze onderdelen te vervangen, worden er reis- en arbeidskosten voor deze service in rekening gebracht.
[2]Optioneel—Onderdelen die de klant zelf kan vervangen. Deze onderdelen zijn ook ontworpen om door de klant zelf te worden vervangen. Als u Hewlett Packard Enterprise verzoekt om deze te vervangen, kan het zijn dat hiervoor extra kosten in rekening worden gebracht, afhankelijk van het soort garantie dat op uw product van toepassing is.
[3]Geen—Sommige onderdelen van Hewlett Packard Enterprise zijn niet ontworpen om door de klant zelf te worden vervangen. Om te voldoen aan de garantievoorwaarden eist Hewlett Packard Enterprise dat een geautoriseerde serviceverlener het onderdeel vervangt. Deze onderdelen worden aangeduid met 'Geen' in de geïllustreerde onderdelencatalogus.

[1]Obrigatório—Peças cujo reparo feito pelo cliente é obrigatório. Se desejar que a Hewlett Packard Enterprise substitua essas peças, serão cobradas as despesas de transporte e mão-de-obra do serviço.
[2]Opcional—Peças cujo reparo feito pelo cliente é opcional. Essas peças também são projetadas para o reparo feito pelo cliente. No entanto, se desejar que a Hewlett Packard Enterprise as substitua, pode haver ou não a cobrança de taxa adicional, dependendo do tipo de serviço de garantia destinado ao produto.
[3]Não—Algumas peças da Hewlett Packard Enterprise não são projetadas para o reparo feito pelo cliente. A fim de cumprir a garantia do cliente, a Hewlett Packard Enterprise exige que um técnico autorizado substitua a peça. Essas peças estão identificadas com a marca "No" (Não), no catálogo de peças ilustrado.

[1]Mandatory：必須 — カスタマーセルフリペアが必須の部品。当該部品について、もしもお客様がHewlett Packard Enterpriseに交換作業を依頼される場合には、その修理サービスに関する交通費および人件費がお客様に請求されます。
[2]Optional：任意 — カスタマーセルフリペアが任意である部品。この部品もカスタマーセルフリペア用です。当該部品について、もしもお客様がHewlett Packard Enterpriseに交換作業を依頼される場合には、お買い上げの製品に適用される保証サービス内容の範囲内においては、別途費用を負担していただくことなく保証サービスを受けることができます。
[3]No：除外 — Hewlett Packard Enterprise製品の一部の部品は、カスタマーセルフリペアの対象外です。製品の保証を継続するためには、Hewlett Packard EnterpriseまたはHewlett Packard Enterprise正規保守代理店による交換作業が必須となります。部品カタログには、当該部品がカスタマーセルフリペア除外品である旨が記載されています。

[1]Mandatory — 客户必须自行维修的部件。如果您请求 Hewlett Packard Enterprise 更换这些部件，则必须为该服务支付差旅费和人工费用。
[2]Optional — 客户可以选择是否自行维修的部件。这些部件也是为客户自行维修设计的。不过，如果您要求 Hewlett Packard Enterprise 为您更换这些部件，则根据为您的产品指定的保修服务类型，Hewlett Packard Enterprise 可能收取或不再收取任何附加费用。
[3]No — 某些 Hewlett Packard Enterprise 部件的设计并未考虑客户自行维修。为了满足客户保修的需要，Hewlett Packard Enterprise 要求授权服务提供商更换相关部件。这些部件在部件图解目录中标记为“否”。

[1]Mandatory — 客戶自行維修所使用的零件是強制性的。如果您要求 Hewlett Packard Enterprise 更換這些零件，Hewlett Packard Enterprise 將會向您收取此服務所需的外出費用與勞動成本。
[2]Optional — 客戶自行維修所使用的零件是選購的。這些零件也設計用於客戶自行維修之用。不過，如果您要求 Hewlett Packard Enterprise 為您更換，則可能需要也可能不需要負擔額外的費用，端視針對此產品指定的保固服務類型而定。
[3]No — 某些 Hewlett Packard Enterprise 零件沒有消費者可自行維修的設計。為符合客戶保固，Hewlett Packard Enterprise 需要授權的服務供應商更換零件。這些零件在圖示的零件目錄中，被標示為「否」。

[1]Mandatory — 고객 셀프 수리가 의무 사항인 필수 부품. 사용자가 Hewlett Packard Enterprise에 이 부품의 교체를 요청할 경우 해당 서비스에 대한 출장비 및 작업비가 청구됩니다.
[2]Optional — 고객 셀프 수리가 선택 사항인 부품. 이러한 부품들도 고객 셀프 수리가 가능하도록 설계되었습니다. 하지만 사용자가 Hewlett Packard Enterprise에 이러한 부품의 교체를 요청할 경우 사용자가 구입한 제품에 해당하는 보증 서비스 유형에 따라 추가 비용 없이 교체가 가능할 수 있습니다.
[3]No — 일부 Hewlett Packard Enterprise 부품은 고객 셀프 수리가 불가능하도록 설계되었습니다. Hewlett Packard Enterprise는 만족스러운 고객 보증을 위해 공인 서비스 제공업체를 통해 부품을 교체하도록 요구하고 있습니다. 이러한 부품들은 Illustrated Parts Catalog에 “No”라고 표시되어 있습니다.

Rear system components

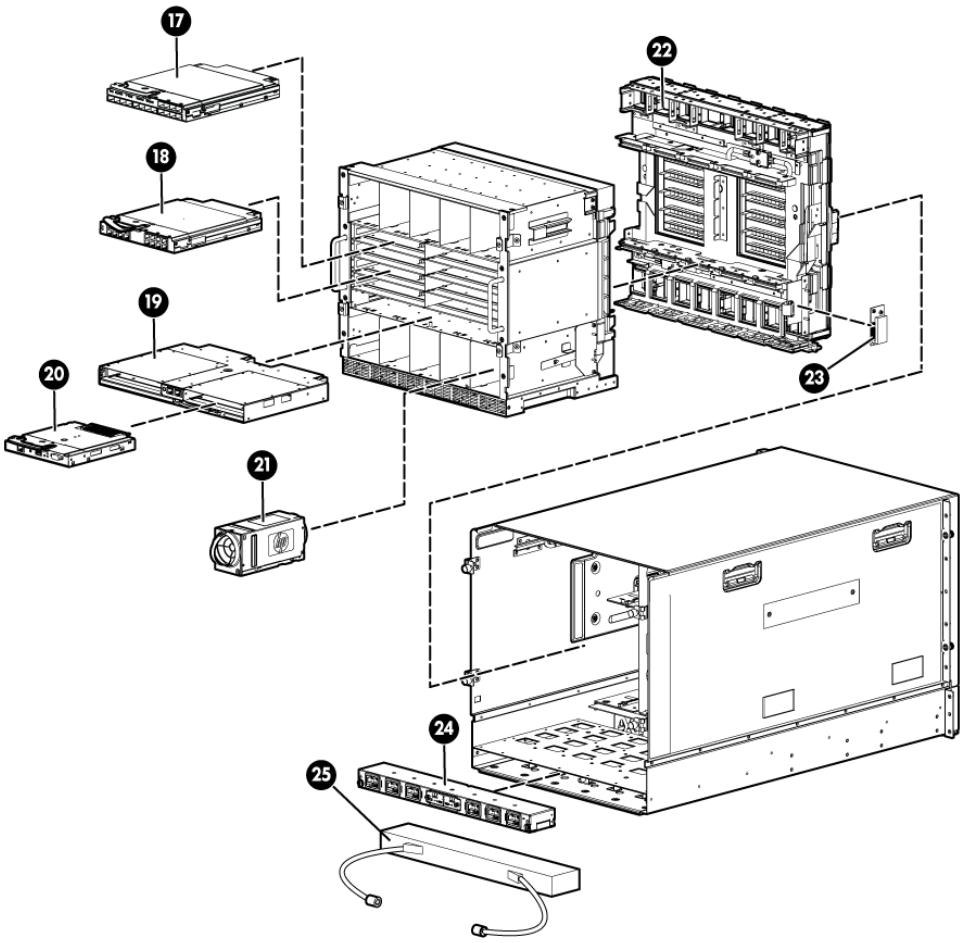

Item	Description	Spare part number	Customer self repair (on page 5)
17	Interconnect module (switch)	—	—
	a) HPE GbE2c Ethernet Blade Switch for HPE c-Class BladeSystem	414037-001	Mandatory[1]
	b) GbE2c Layer 2/3 Ethernet Blade Switch for c-Class BladeSystem*	438475-001	Mandatory[1]
	c) HPE 10Gb Ethernet BL-c Switch*	447116-001	Mandatory[1]
	d) HPE 1:10Gb Ethernet BL-c Switch*	438476-001	Mandatory[1]
	e) Brocade 4Gb SAN Switch for c-Class BladeSystem, 12 ports*	411120-001	Mandatory[1]
	f) Brocade 4Gb SAN switch for HPE c-Class BladeSystem, 24 ports*	411121-001	Mandatory[1]
	g) Brocade 4Gb SAN Switch for HPE c-Class BladeSystem, 24 ports, with Power Pack Software*	411122-001	Mandatory[1]
	h) Cisco Catalyst Blade Switch 3020 for c-Class BladeSystem*	432904-001	Mandatory[1]
	i) HPE 1/10Gb Virtual Connect Ethernet Module for c-Class BladeSystem*	399725-001	Mandatory[1]

Item	Description	Spare part number	Customer self repair (on page 5)
	j) HPE 4Gb Virtual Connect Fibre Channel Module for c-Class BladeSystem*	410152-001	Mandatory[1]
	k) HPE 4X DDR IB Switch Module for c-Class BladeSystem*	410408-001	Mandatory[1]
	l) HPE BLc 1/10GB-F Virtual Connect Enet Module*	447103-001	Mandatory[1]
	m) Cisco MDS 9124e 12-port Fabric Switch*	444572-001	Mandatory[1]
	n) Cisco MDS9124e 24-port Fabric Switch*	444573-001	Mandatory[1]
	o) 8-GB 12-port SAN switch*	489864-001	Mandatory[1]
	p) 8-GB 24-port SAN switch*	489865-001	Mandatory[1]
	q) 8-GB 16-port SAN switch with power pack and licensed features*	489866-001	Mandatory[1]
	r) HPE BLc Cisco 1/10GbE 3120X Switch*	451357-001	Mandatory[1]
	s) HPE BLc Cisco 1GbE 3120G Switch*	451356-001	Mandatory[1]
	t) HPE 6120G/BX, Blade Switch*	508090-001	Mandatory[1]
	u) Switch, 10Gb Ethernet, c-Class*	517994-001	Mandatory[1]
	v) Module BLc VC8Gb 20 Port FC*	572216-001	Mandatory[1]
	w) HPE BLc VC Flex-10/10D Module*	639852-001	Mandatory[1]
	x) HPE Virtual Connect FlexFabric 10Gb/24-port Module for c-Class BladeSystem*	572213-001	Mandatory[1]
	y) HPE 6125G Ethernet Blade Switch*	663656-001	Mandatory[1]
	z) HPE 6125G/XG Ethernet Blade Switch*	663658-001	Mandatory[1]
18	Interconnect module (Pass-Thru)	—	—
	a) HPE 1Gb Ethernet Pass-Thru Module for c-Class BladeSystem	419329-001	Mandatory[1]
	b) HPE 4 Gb Fibre Channel Pass-Thru Module for c-Class BladeSystem*	416378-001	Mandatory[1]
	c) 10Gb Pass-Thru, BNT*	504624-001	Mandatory[1]
19	Onboard Administrator	—	—
	a) HPE BladeSystem Onboard Administrator	414055-001	Mandatory[1]
	b) HPE c7000 Onboard Administrator with KVM*	503826-001	Mandatory[1]
20	Onboard Administrator tray	—	—
	a) Onboard Administrator tray	416000-001	Mandatory[1]
	b) Onboard Administrator tray (RoHS)*	519346-001	Mandatory[1]
21	Active Cool 200 fan	413996-001	Mandatory[1]
22	Midplane assembly	—	—
	a) Midplane assembly	414050-001	No[3]
	b) Midplane assembly (RoHS)*	519345-001	No[3]
	c) Midplane assembly, AMP* ** (includes the rear cage)	689229-001	No[3]

Item	Description	Spare part number	Customer self repair (on page 5)
23	Insight Display connector board		—
	a) Insight Display connector board	416001-001	No[3]
	b) Insight Display LCD connector board (RoHS)*	519347-001	No[3]
24	AC module	—	—
	a) AC input module, single-phase*	413494-001	Mandatory[1]
	b) AC module, single-phase, Intelligent	666226-001	Mandatory[1]
	c) AC input module, single phase, HVDC*†	754219-001	Mandatory[1]
25	Three-phase AC input module, North America and Japan	413495-001	Mandatory[1]
26	Three-phase AC input module, international*	413496-001	Mandatory[1]
27	DC input module*	544661-001	Mandatory[1]
28	HPE c-Class Blade SUV cable*	416003-001	Mandatory[1]
29	USB cable for the single-phase intelligent power input module*	711595-001	Mandatory[1]

*Not shown
** Platinum models only
† This component is available on the following enclosure models:

- 681840-b21
- 681842-b21
- 681844-b21
- 763850-b21

[1]Mandatory—Parts for which customer self repair is mandatory. If you request Hewlett Packard Enterprise to replace these parts, you will be charged for the travel and labor costs of this service.
[2]Optional—Parts for which customer self repair is optional. These parts are also designed for customer self repair. If, however, you require that Hewlett Packard Enterprise replace them for you, there may or may not be additional charges, depending on the type of warranty service designated for your product.
[3]No—Some Hewlett Packard Enterprise parts are not designed for customer self repair. In order to satisfy the customer warranty, Hewlett Packard Enterprise requires that an authorized service provider replace the part. These parts are identified as "No" in the Illustrated Parts Catalog.

[1]Obligatoire—Pièces pour lesquelles le client doit procéder lui-même aux réparations. Si vous demandez à Hewlett Packard Enterprise de procéder au remplacement de ces pièces, les frais de transport et de main d'œuvre pour ce service vous seront facturés.
[2]Facultatif—Pièces pour lesquelles une réparation par le client est facultative. Ces pièces sont également conçues pour que le client puisse procéder lui-même aux réparations. Cependant, les frais supplémentaires engendrés par le remplacement de ces pièces par Hewlett Packard Enterprise dépendent du type de service de garantie désigné pour votre produit.
[3]Non—Certaines pièces Hewlett Packard Enterprise ne sont pas conçues pour être remplacées par le client. Afin de se conformer aux exigences de la garantie la garantie du client, Hewlett Packard Enterprise demande à un fournisseur de services agréé de procéder au remplacement de la pièce. Ces pièces sont signaléespar le mot « Non » dans le Catalogue de pièces illustré.

[1]Obbligatorio—Parti per le quali il cliente è tenuto a effettuare autonomamente la riparazione. Se si richiede l'intervento di Hewlett Packard Enterprise per la sostituzione di queste parti, al cliente verranno addebitate le spese di viaggio e manodopera dell'operazione.
[2]Facoltativo—Parti per le quali la riparazione in autonomia da parte del cliente è facoltativa. Queste parti sono progettate per consentire anche la riparazione da parte del cliente. Tuttavia, se il cliente richiedel'intervento di Hewlett Packard Enterprise per la sostituzione, potrebbero essere addebitate spese aggiuntive a seconda del tipo di garanzia in assistenza previsto per il prodotto.

[3]No—Alcune parti Hewlett Packard Enterprise non sono progettate la riparazione in autonomia da parte del cliente. In base a quanto previsto dalla garanzia per il cliente, Hewlett Packard Enterprise richiede l'intervento di un tecnico autorizzato per la sostituzione della parte. Queste parti sono contrassegnate con"No"nel catalogo parti illustrato.

[1]Zwingend—Teile, für die das Customer Self Repair-Verfahren zwingend vorgegeben ist. Wenn Sie den Austausch dieser Teile von Hewlett Packard Enterprisevornehmen lassen, werden Ihnen die Anfahrt- und Arbeitskosten für diesen Service berechnet.
[2]Optional—Teile, für die das Customer Self Repair-Verfahren optional ist. Diese Teile sind auch für Customer Self Repair ausgelegt. Wenn Sie jedoch den Austausch dieser Teile von Hewlett Packard Enterprisevornehmen lassen möchten, können bei diesem Service je nach den für Ihr Produkt vorgesehenen Garantiebedingungen zusätzliche Kosten anfallen.
[3]Nein—Einige Hewlett Packard Enterprise Teile sind nicht für Customer Self Repair ausgelegt. Um den Garantieanspruch des Kunden zu erfüllen, muss das Teil von einem Hewlett Packard Enterprise Servicepartner ersetzt werden. Im illustrierten Teilekatalog sind diese Teile mit „No“ bzw. „Nein“ gekennzeichnet.

[1]Obligatorio—Componentes cuya reparación por parte del usuario es obligatoria. Si solicita a Hewlett Packard Enterprise que realice la sustitución de estos componentes, tendrá que hacerse cargo de los gastos de desplazamiento y de mano de obra de dicho servicio.
[2]Opcional—Componentes cuya reparación por parte del usuario es opcional. Estos componentes también están diseñados para que puedan ser reparados por el usuario. Sin embargo, si precisa que Hewlett Packard Enterprise realice su sustitución, puede o no conllevar costes adicionales, dependiendo del tipo de servicio de garantía correspondiente al producto.
[3]No—Algunos componentes de Hewlett Packard Enterprise no están diseñados para que puedan ser reparados por el usuario. Para que el usuario haga valer su garantía, Hewlett Packard Enterprise pone como condición que un proveedor de servicios autorizado realice la sustitución de estos componentes. Dichos componentes se identifican con la palabra "No" en el catálogo ilustrado de componentes.

[1]Verplicht—Onderdelen die de klant zelf moet vervangen. Als u Hewlett Packard Enterprise vraagt deze onderdelen te vervangen, worden er reis- en arbeidskosten voor deze service in rekening gebracht.
[2]Optioneel—Onderdelen die de klant zelf kan vervangen. Deze onderdelen zijn ook ontworpen om door de klant zelf te worden vervangen. Als u Hewlett Packard Enterprise verzoekt om deze te vervangen, kan het zijn dat hiervoor extra kosten in rekening worden gebracht, afhankelijk van het soort garantie dat op uw product van toepassing is.
[3]Geen—Sommige onderdelen van Hewlett Packard Enterprise zijn niet ontworpen om door de klant zelf te worden vervangen. Om te voldoen aan de garantievoorwaarden eist Hewlett Packard Enterprise dat een geautoriseerde serviceverlener het onderdeel vervangt. Deze onderdelen worden aangeduid met 'Geen' in de geïllustreerde onderdelencatalogus.

[1]Obrigatório—Peças cujo reparo feito pelo cliente é obrigatório. Se desejar que a Hewlett Packard Enterprise substitua essas peças, serão cobradas as despesas de transporte e mão-de-obra do serviço.
[2]Opcional—Peças cujo reparo feito pelo cliente é opcional. Essas peças também são projetadas para o reparo feito pelo cliente. No entanto, se desejar que a Hewlett Packard Enterprise as substitua, pode haver ou não a cobrança de taxa adicional, dependendo do tipo de serviço de garantia destinado ao produto.
[3]Não—Algumas peças da Hewlett Packard Enterprise não são projetadas para o reparo feito pelo cliente. A fim de cumprir a garantia do cliente, a Hewlett Packard Enterprise exige que um técnico autorizado substitua a peça. Essas peças estão identificadas com a marca "No" (Não), no catálogo de peças ilustrado.

[1]Mandatory：必須 — カスタマーセルフリペアが必須の部品。当該部品について、もしもお客様がHewlett Packard Enterpriseに交換作業を依頼される場合には、その修理サービスに関する交通費および人件費がお客様に請求されます。
[2]Optional：任意 — カスタマーセルフリペアが任意である部品。この部品もカスタマーセルフリペア用です。当該部品について、もしもお客様がHewlett Packard Enterpriseに交換作業を依頼される場合には、お買い上げの製品に適用される保証サービス内容の範囲内においては、別途費用を負担していただくことなく保証サービスを受けることができます。
[3]No：除外 — Hewlett Packard Enterprise製品の一部の部品は、カスタマーセルフリペアの対象外です。製品の保証を継続するためには、Hewlett Packard EnterpriseまたはHewlett Packard Enterprise正規保守代理店による交換作業が必須となります。部品カタログには、当該部品がカスタマーセルフリペア除外品である旨が記載されています。

[1]Mandatory — 客户必须自行维修的部件。如果您请求 Hewlett Packard Enterprise 更换这些部件，则必须为该服务支付差旅费和人工费用。
[2]Optional — 客户可以选择是否自行维修的部件。这些部件也是为客户自行维修设计的。不过，如果您要求 Hewlett Packard Enterprise 为您更换这些部件，则根据为您的产品指定的保修服务类型，Hewlett Packard Enterprise 可能收取或不再收取任何附加费用。
[3]No — 某些 Hewlett Packard Enterprise 部件的设计并未考虑客户自行维修。为了满足客户保修的需要，Hewlett Packard Enterprise 要求授权服务提供商更换相关部件。这些部件在部件图解目录中标记为“否”。

[1]Mandatory — 客戶自行維修所使用的零件是強制性的。如果您要求 Hewlett Packard Enterprise 更換這些零件，Hewlett Packard Enterprise 將會向您收取此服務所需的外出費用與勞動成本。
[2]Optional — 客戶自行維修所使用的零件是選購的。這些零件也設計用於客戶自行維修之用。不過，如果您要求 Hewlett Packard Enterprise 為您更換，則可能需要也可能不需要負擔額外的費用，端視針對此產品指定的保固服務類型而定。
[3]No — 某些 Hewlett Packard Enterprise 零件沒有消費者可自行維修的設計。為符合客戶保固，Hewlett Packard Enterprise 需要授權的服務供應商更換零件。這些零件在圖示的零件目錄中，被標示為「否」。

[1]Mandatory — 고객 셀프 수리가 의무 사항인 필수 부품. 사용자가 Hewlett Packard Enterprise에 이 부품의 교체를 요청할 경우 해당 서비스에 대한 출장비 및 작업비가 청구됩니다.
[2]Optional — 고객 셀프 수리가 선택 사항인 부품. 이러한 부품들도 고객 셀프 수리가 가능하도록 설계되었습니다. 하지만 사용자가 Hewlett Packard Enterprise에 이러한 부품의 교체를 요청할 경우 사용자가 구입한 제품에 해당하는 보증 서비스 유형에 따라 추가 비용 없이 교체가 가능할 수 있습니다.
[3]No — 일부 Hewlett Packard Enterprise 부품은 고객 셀프 수리가 불가능하도록 설계되었습니다. Hewlett Packard Enterprise는 만족스러운 고객 보증을 위해 공인 서비스 제공업체를 통해 부품을 교체하도록 요구하고 있습니다. 이러한 부품들은 Illustrated Parts Catalog에 “No”라고 표시되어 있습니다.

Removal and replacement procedures

Required tools

The following items are required for some procedures:

- T-10 Torx screwdriver
- T-15 Torx screwdriver

Safety considerations

Before performing service procedures, review all the safety information.

Preventing electrostatic discharge

To prevent damaging the system, be aware of the precautions you need to follow when setting up the system or handling parts. A discharge of static electricity from a finger or other conductor may damage system boards or other static-sensitive devices. This type of damage may reduce the life expectancy of the device.

To prevent electrostatic damage:

- Avoid hand contact by transporting and storing products in static-safe containers.
- Keep electrostatic-sensitive parts in their containers until they arrive at static-free workstations.
- Place parts on a grounded surface before removing them from their containers.
- Avoid touching pins, leads, or circuitry.
- Always be properly grounded when touching a static-sensitive component or assembly.

Warning and caution messages

⚠ **WARNING:** To reduce the risk of personal injury or damage to equipment, heed all warnings and cautions throughout the installation instructions.

⚠ **WARNING:** To reduce the risk of personal injury or damage to the equipment, be sure that:

- The leveling jacks are extended to the floor.
- The full weight of the rack rests on the leveling jacks.
- The stabilizing feet are attached to the rack if it is a single-rack installation.
- The racks are coupled together in multiple-rack installations.
- Only one component is extended at a time. A rack may become unstable if more than one component is extended for any reason.

⚠ **WARNING:** To reduce the risk of personal injury or equipment damage when unloading a rack:

- At least two people are needed to safely unload the rack from the pallet. An empty 42U rack can weigh as much as 115 kg (253 lb), can stand more than 2.1 m (7 ft) tall, and might become unstable when being moved on its casters.
- Never stand in front of the rack when it is rolling down the ramp from the pallet. Always handle the rack from both sides.

WARNING: The enclosure is very heavy. To reduce the risk of personal injury or damage to the equipment:

- Observe local occupational health and safety requirements and guidelines for manual material handling.
- Remove all installed enclosure components from their enclosures before installing or moving the enclosures.
- Use caution and get help to lift and stabilize enclosures during installation or removal, especially when the enclosure is not fastened to the rack.

WARNING: To reduce the risk of personal injury or damage to the equipment in a rack-free environment:

- Never stack the enclosure on top of another enclosure.
- Never place equipment on top of the enclosure.
- Never place the enclosure on a surface that cannot support up to 217.7 kg (480.0 lb).

WARNING: To reduce the risk of personal injury or damage to the equipment, you must adequately support enclosures during installation and removal.

WARNING: Always use at least two people to lift an enclosure into the rack. If the enclosure is being loaded into the rack above chest level, a third person must assist with aligning the enclosure with the rails while the other two people support the weight of the enclosure.

WARNING: Before installing an enclosure in the rack, be sure that all hot-plug power supplies, server blades, and interconnects are removed from the enclosure. Blanks can be left in the enclosure.

WARNING: Be sure to install enclosures starting from the bottom of the rack and work your way up the rack.

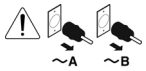

These symbols, on power supplies or systems, indicate that the equipment is supplied by multiple sources of power.

WARNING: To reduce the risk of injury from electric shock, remove all power cords to completely disconnect power from the system.

Each enclosure has two or more power supply cords. A single rack or cabinet may contain more than one enclosure. Power may be supplied in a redundant fashion. Removing any single source of power does not necessarily remove power from any portion of the system. When performing any service other than hot-plug module replacement, you must completely disconnect all power to that portion of the system. When performing service procedures on enclosures, shut off the circuit breakers to both A and B AC power feeds and then disconnect all power cords from the outlets before servicing.

WARNING: To reduce the risk of personal injury from hot surfaces, allow the drives and the internal system components to cool before touching them.

WARNING: To reduce the risk of electric shock or damage to the equipment, enter enclosures or perform service on system components only as instructed in the user documentation.

WARNING: A risk of electric shock from high leakage current exists. Before connecting the AC supply to the power enclosures, be sure that the electrical outlets are properly grounded (earthed).

CAUTION: Always be sure that equipment is properly grounded and that you follow proper grounding procedures before beginning any installation procedure. Improper grounding can result in ESD damage to electronic components. For more information, see "Preventing electrostatic discharge (on page 26)."

CAUTION: When performing non-hot-plug operations, you must power down the server blade and/or the system. Use caution when performing other operations, such as hot-plug installations or troubleshooting.

CAUTION: Protect the equipment from AC power fluctuations and temporary interruptions with a regulating facility UPS device. This device protects the hardware from damage caused by power surges and voltage spikes and keeps the system in operation during a power failure.

Preparing the enclosure

To service any internal enclosure component, complete the following actions:

- Power down all server blades or workstation blades ("Power down the server blades or workstation blades" on page 28).
- Power down all storage blades ("Power down the storage blade" on page 29).
- Power down the enclosure (on page 29).

Power down the server blades or workstation blades

Before powering down the server blades or workstation blades for any upgrade or maintenance procedures, perform a backup of critical server data and programs.

Depending on the Onboard Administrator configuration, use one of the following methods to power down the server blades or workstation blades:

- Use a virtual power button selection through iLO.

  This method initiates a controlled remote shutdown of applications and the OS before the server blades or workstation blades enters standby mode.

- Press and release the Power On/Standby button.

  This method initiates a controlled shutdown of applications and the OS before the server blades or workstation blades enters standby mode.

- Press and hold the Power On/Standby button for more than 4 seconds to force the server blades or workstation blades to enter standby mode.

  This method forces the server blades or workstation blades to enter standby mode without properly exiting applications and the OS. It provides an emergency shutdown method if an application stops responding.

- Execute one of the following commands using the Onboard Administrator CLI:

  ```
  poweroff server [bay number]
  ```

  or

  ```
  poweroff server [bay number] force
  ```

  The first command initiates a controlled shutdown of applications and the OS before the server blades or workstation blades enters standby mode. The second form of the command forces the server blades or workstation blades to enter standby mode without exiting applications and the OS. This emergency method forces a shutdown if an application stops responding.

- Use the Onboard Administrator GUI to initiate a shutdown:

  a. Select the **Enclosure Information** tab, and then select the **Overall** checkbox in the Device Bays item.

b. Initiate a shutdown from the Virtual Power menu:

— Select **Momentary Press** to initiate a controlled shutdown of applications and the OS.

— Select **Press and Hold** to initiate an emergency shutdown of applications and the OS.

IMPORTANT: When the server blades or workstation blades is in standby mode, auxiliary power is still being provided. To remove all power from the server blades or workstation blades, remove the server blades or workstation blades from the enclosure.

After initiating a virtual power down command, be sure that the server blades or workstation blades is in standby mode by observing that the system power LED is amber.

Power down the storage blade

In systems that use storage blade as external data storage, be sure that the partner server blades or workstation blades are the first to be powered down and the last to be powered back up. Taking this precaution enables the system to initialize the storage blade when they are powered up and to shut down the storage blade and the OS in an orderly manner when they are powered down.

IMPORTANT: If installing a hot-plug device, it is not necessary to power down the storage blade.

To power down the storage blade, power down the partner server blades or workstation blades. The storage blade automatically switch to standby mode. The storage blade remain in standby mode as long as power is available to the enclosure.

Power down the enclosure

1. Power down all server blades or workstation blades ("Power down the server blades or workstation blades" on page 28).
2. Power down all storage blade ("Power down the storage blade" on page 29).
3. Disconnect all power cables.

HPE BladeSystem c7000 power supply or power supply blank

CAUTION: This procedure provides instructions for replacement of a failed part only. To change the configuration of components, see the appropriate BladeSystem c-Class enclosure setup and installation guide.

CAUTION: Do not mix HPE 2250W, HPE 2400W High Efficiency, HPE BL7000 2400W Platinum, or HPE -48vDC power supplies in one enclosure. Install only one type of power supply in a single enclosure.

NOTE: To access all power supply bays, slide the BladeSystem Insight Display to the right or left.

To remove the component:

1. Press the release button.
2. Pull down the handle.

3. Remove the power supply or the power supply blank.

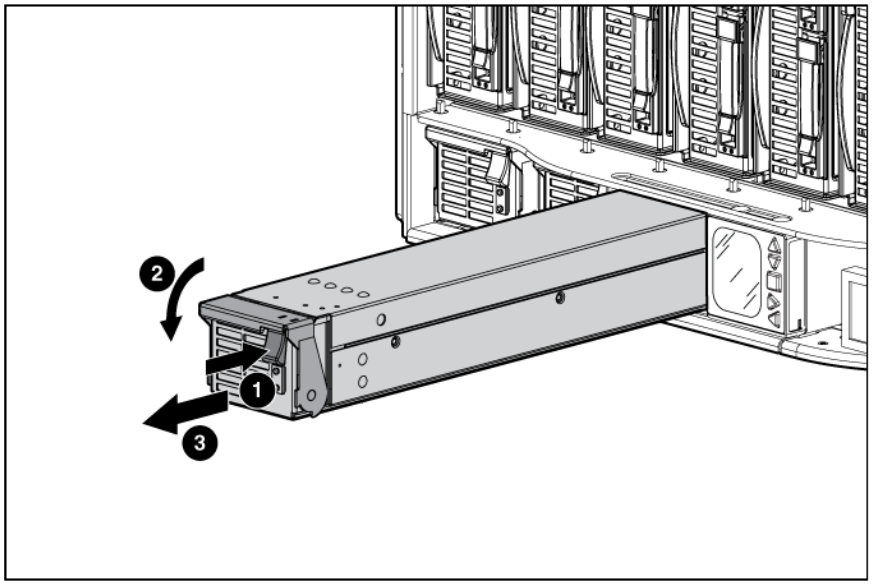

△ **CAUTION:** For best cooling practices, do not operate the enclosure for extended periods with more than one component or blank removed. When removing an active component, replace it with a blank.

To replace the component, reverse the removal procedure.

Device bay blank

Remove the blank from the enclosure:

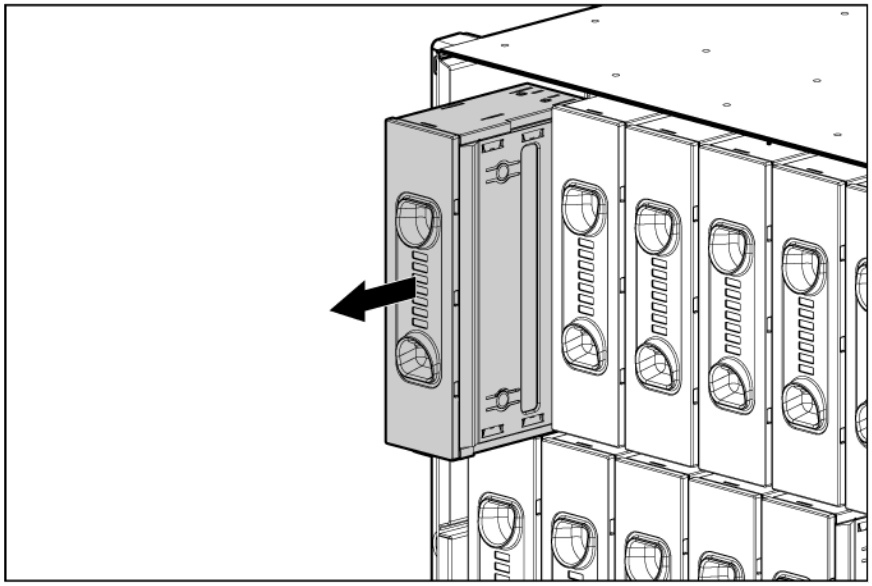

△ **CAUTION:** For best cooling practices, do not operate the enclosure for extended periods with more than one component or blank removed. When removing an active component, replace it with a blank.

To replace the component, reverse the removal procedure.

Device bay shelf

The c7000 enclosure is divided into four quadrants by the vertical support metal work. Within each quadrant, a removable divider supports half-height blades. To install a full-height blade in any quadrant, this divider must be removed. Therefore, a quadrant can only contain either full-height blades or half-height blades.

△ **CAUTION:** Failure to install the divider in a quadrant when installing half-height blades can result in damage to the connectors on the server blades.

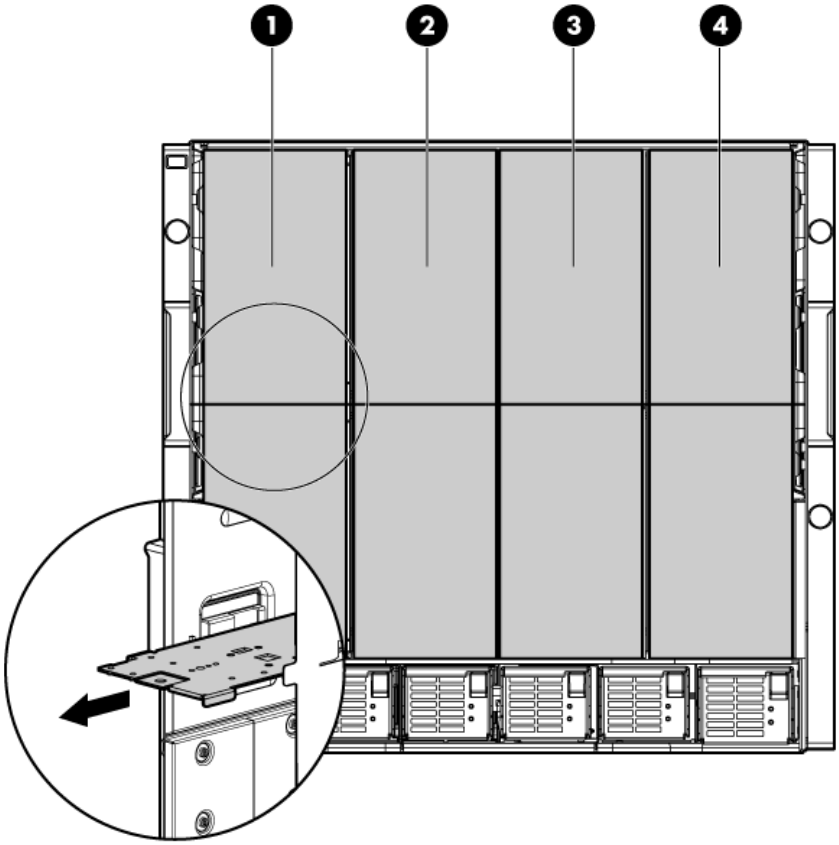

Item	Description
1	Blade Zone 1
2	Blade Zone 2
3	Blade Zone 3
4	Blade Zone 4

Storage blades and tape blades can be installed in the same quadrant as both full-height and half-height blades. A bracket ships with each SB40c Storage Blade that allows a half-height blade to be mounted on top of the storage blade.

The lower tape or storage blade cannot be removed without first removing the upper half-height blade.

To remove the component:

1. Remove any components in the device bays:
   - Device bay blank
   - Half-height or full-height blade

2. Slide the device bay shelf locking tab to the left to open it.

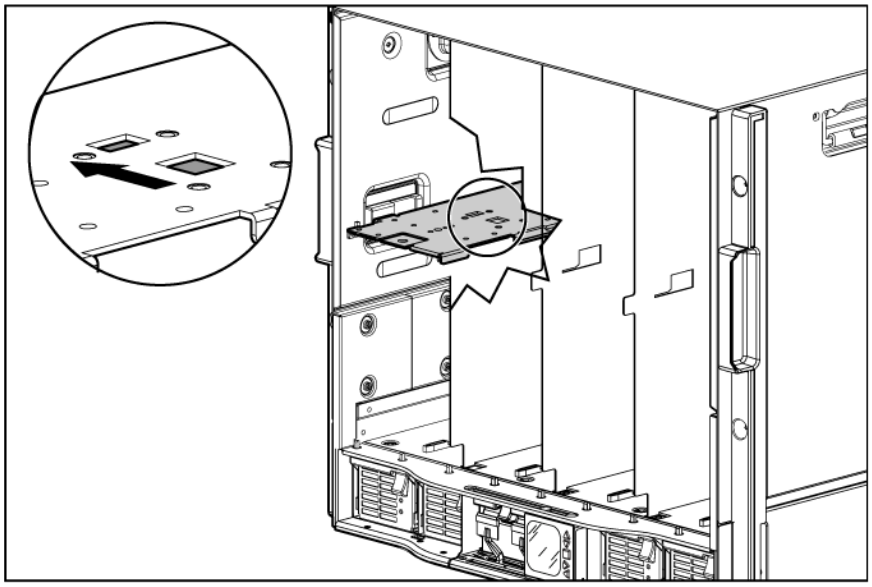

3. Push the device bay shelf back until it stops, lift the right side slightly to disengage the two tabs from the divider wall, and then rotate the right edge downward (clockwise).

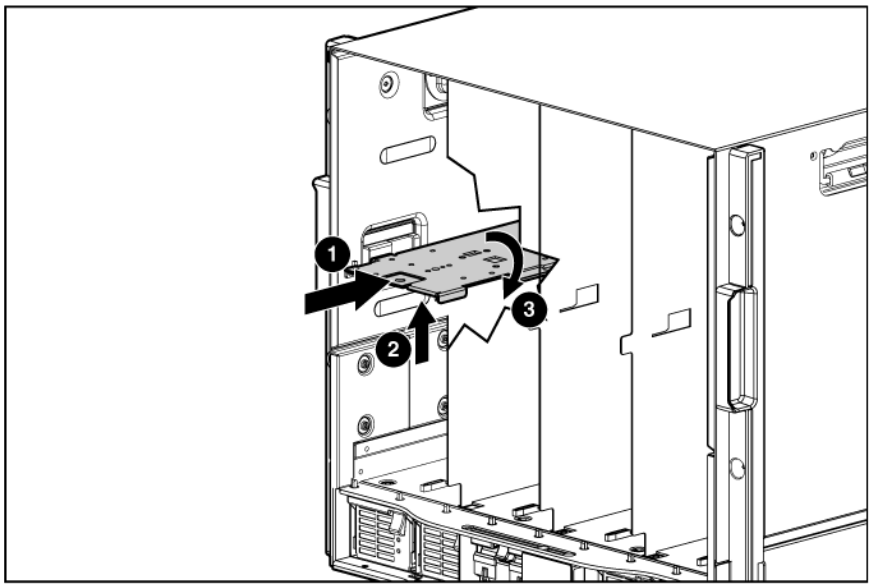

4. Lift the left side of the device bay shelf to disengage the three tabs from the divider wall, and then remove it from the enclosure.

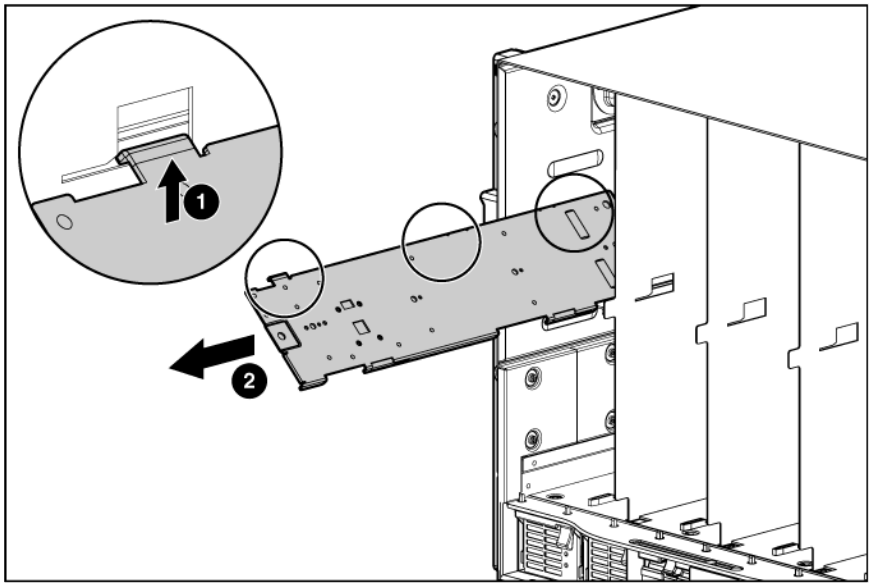

To replace the component, reverse the removal procedure.

Half-height or full-height blade

△ **CAUTION:** This procedure provides instructions for replacement of a failed part only. To change the configuration of components, see the appropriate BladeSystem c-Class enclosure setup and installation guide.

The c7000 enclosure is divided into four quadrants by the vertical support metal work. Within each quadrant, a removable divider supports half-height blades. To install a full-height blade in any quadrant, this divider must be removed. Therefore, a quadrant can only contain either full-height blades or half-height blades.

△ **CAUTION:** Failure to install the divider in a quadrant when installing half-height blades can result in damage to the connectors on the server blades.

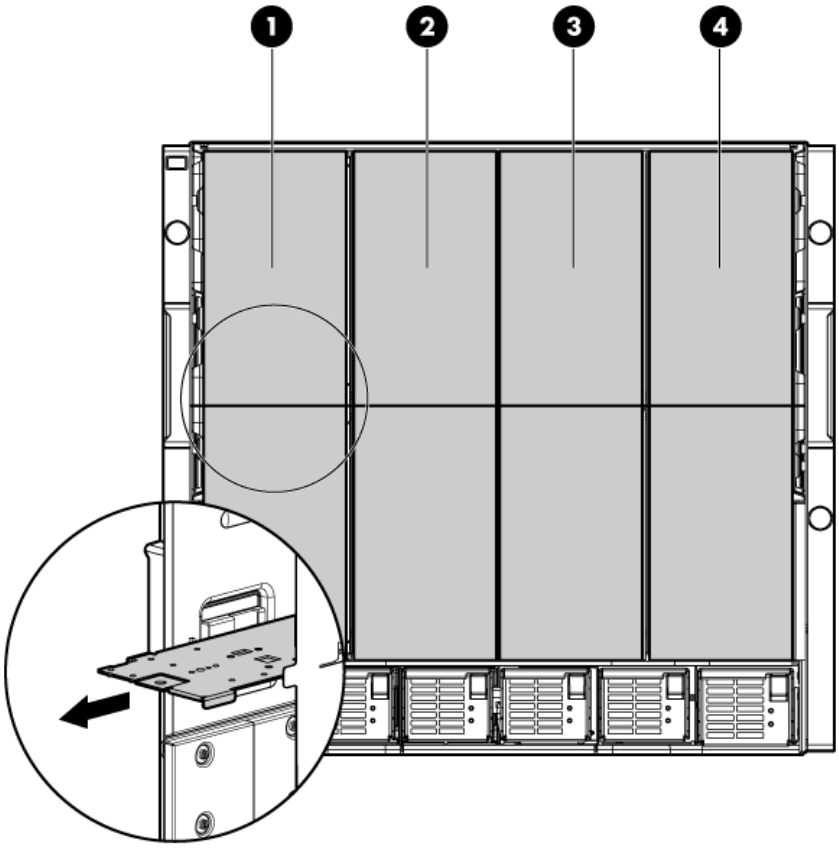

Item	Description
1	Blade Zone 1
2	Blade Zone 2
3	Blade Zone 3
4	Blade Zone 4

Storage blades and tape blades can be installed in the same quadrant as both full-height and half-height blades. A bracket ships with each SB40c Storage Blade that allows a half-height blade to be mounted on top of the storage blade.

The lower tape or storage blade cannot be removed without first removing the upper half-height blade.

To remove the component:

1. Identify the proper half-height or full-height blade in the enclosure ("Device bay numbering" on page 62).
2. Back up all data.
3. Power down the half-height or full-height blade ("Power down the server blades or workstation blades" on page 28).
4. Remove the blade:

- Half-height blade

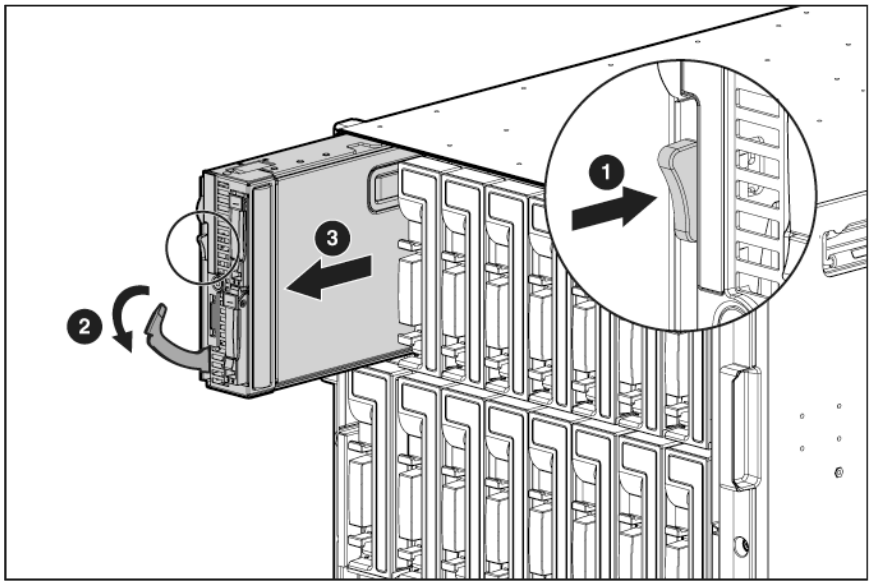

- Full-height blade

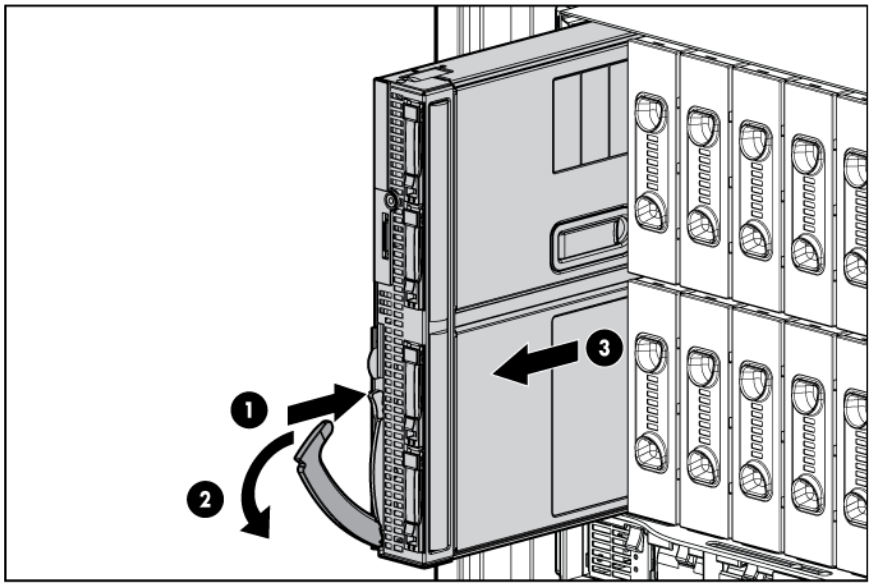

CAUTION: For best cooling practices, do not operate the enclosure for extended periods with more than one component or blank removed. When removing an active component, replace it with a blank.

To replace the component, reverse the removal procedure.

HPE BladeSystem Insight Display

To remove the component:

1. Power down the enclosure (on page 29).
2. Remove the following components:
   - Half-height blades: bays 9-13 ("Half-height or full-height blade" on page 33)
   - Full-height blades: bays 1-5 ("Half-height or full-height blade" on page 33)

- Device bay blanks: bays 9-13 ("Device bay blank" on page 30)
- Power supplies or blanks: bays 1-4 ("HPE BladeSystem c7000 power supply or power supply blank" on page 29)

3. Remove the three T-15 Torx screws that secure the Insight Display cable center cover, and then remove the cover.

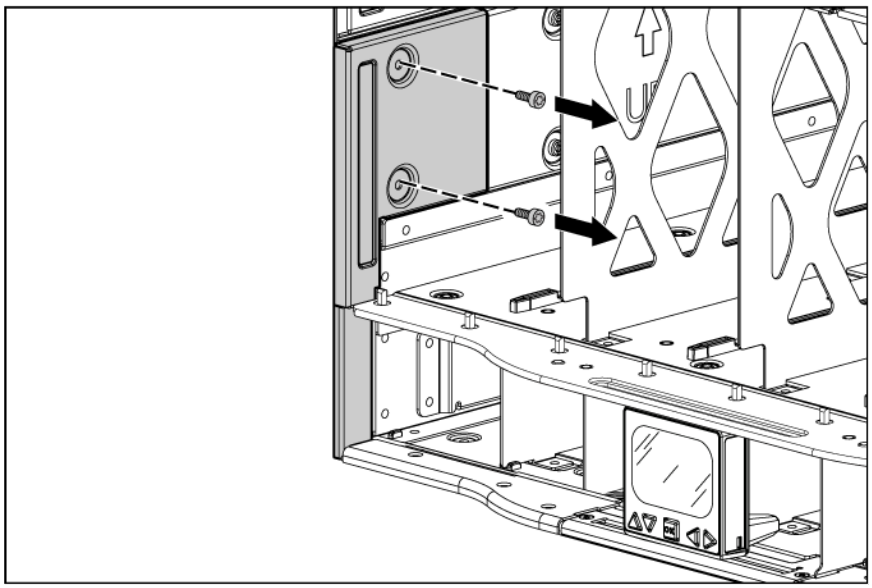

4. Disconnect the Insight Display cable.
5. Remove the two T-10 Torx screws that secure the Insight Display.
6. Remove the upper brace.

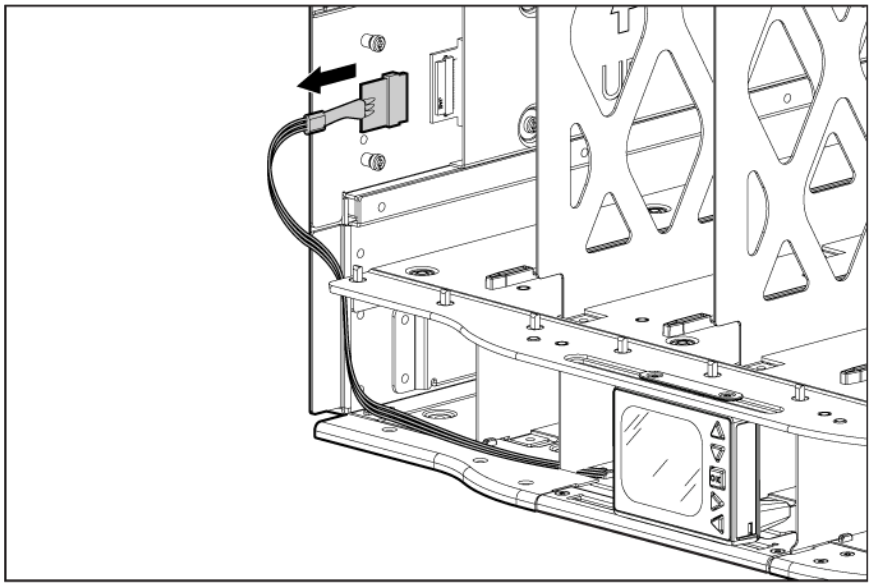

7. Tilt the Insight Display forward and remove it from the enclosure.

8. Carefully remove the Insight Display cable through the cable channel.

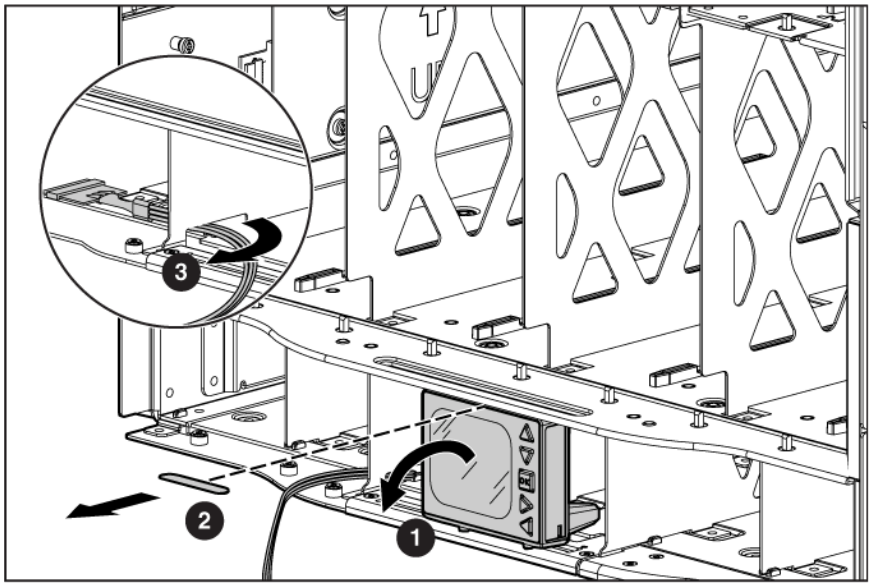

To replace the component, reverse the removal procedure.

Fan blank

To remove the component:

1. Turn the handle counterclockwise.
2. Remove the blank.

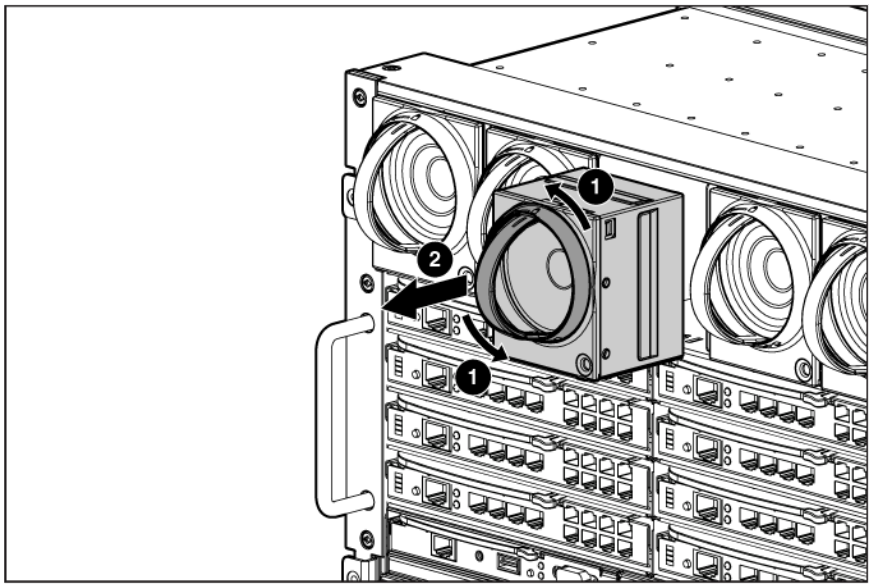

△ **CAUTION:** For best cooling practices, do not operate the enclosure for extended periods with more than one component or blank removed. When removing an active component, replace it with a blank.

To replace the component, reverse the removal procedure.

Active Cool 200 fan

CAUTION: This procedure provides instructions for replacement of a failed part only. To change the configuration of components, see the appropriate BladeSystem c-Class enclosure setup and installation guide.

To remove the component:

1. Turn the handle counterclockwise.
2. Remove the fan.

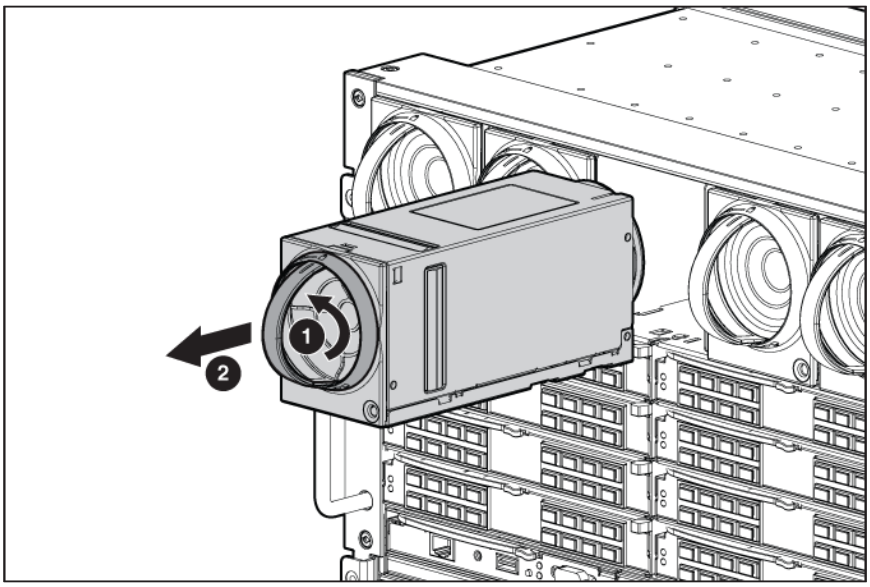

CAUTION: For best cooling practices, do not operate the enclosure for extended periods with more than one component or blank removed. When removing an active component, replace it with a blank.

To replace the component, reverse the removal procedure.

When installing the bottom fans, invert them so that the fan LED is in the top left corner.

Interconnect blank

To remove the component:

1. Press the release tabs.

2. Remove the blank.

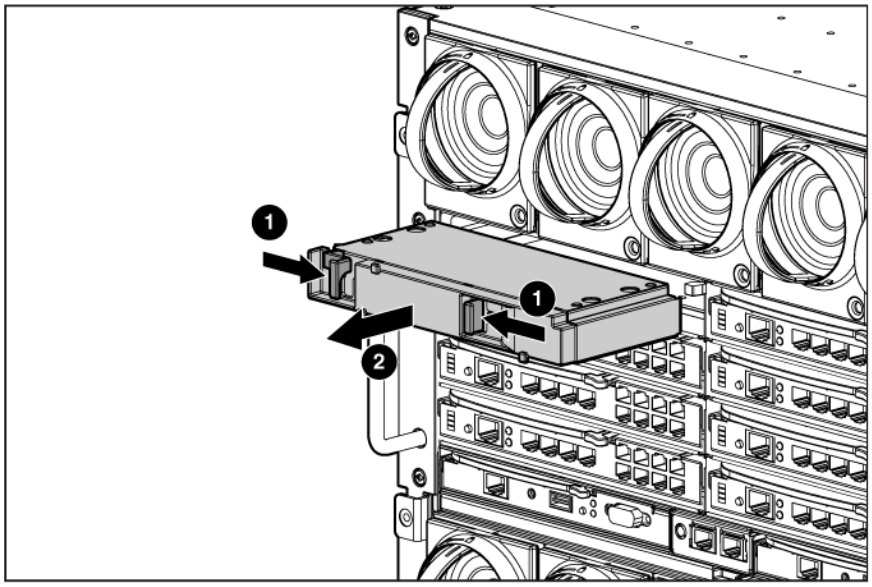

CAUTION: For best cooling practices, do not operate the enclosure for extended periods with more than one component or blank removed. When removing an active component, replace it with a blank.

To replace the component, slide the component into the bay until it locks into place.

Enclosure front bezels (Platinum models only)

Remove the component as indicated.

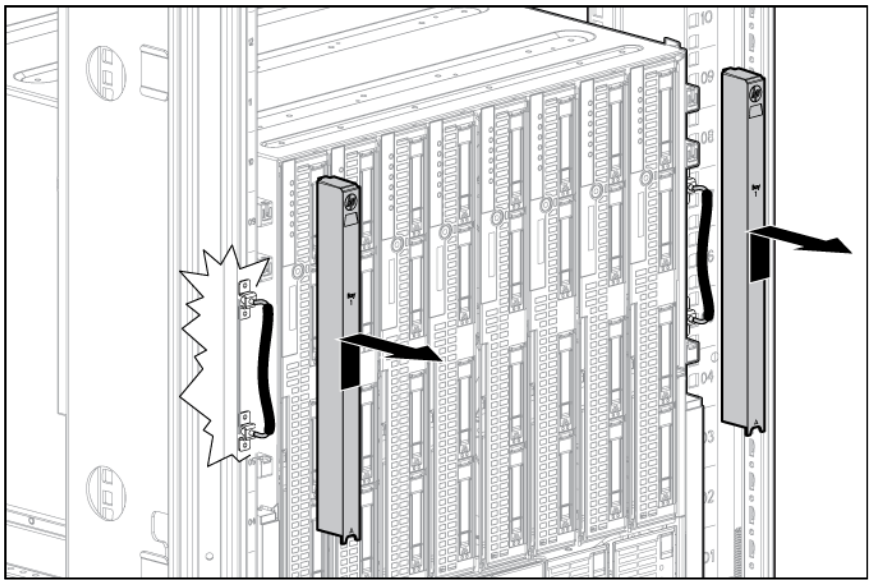

To replace the component, reverse the removal procedure.

Interconnect switch or Pass-Thru module

CAUTION: This procedure provides instructions for replacement of a failed part only. To change the configuration of components, see the appropriate BladeSystem c-Class enclosure setup and installation guide.

To remove the component:

CAUTION: To prevent data loss, redirect network activity or be sure that all critical network activity has stopped before removing the interconnect module.

IMPORTANT: An SFP port must be occupied by an SFP transceiver or an SFP dust cover at all times.

1. Disconnect all cables from the component.
2. Press the release tab.
3. Open the handle.
4. Remove the interconnect switch or Pass-Thru module.

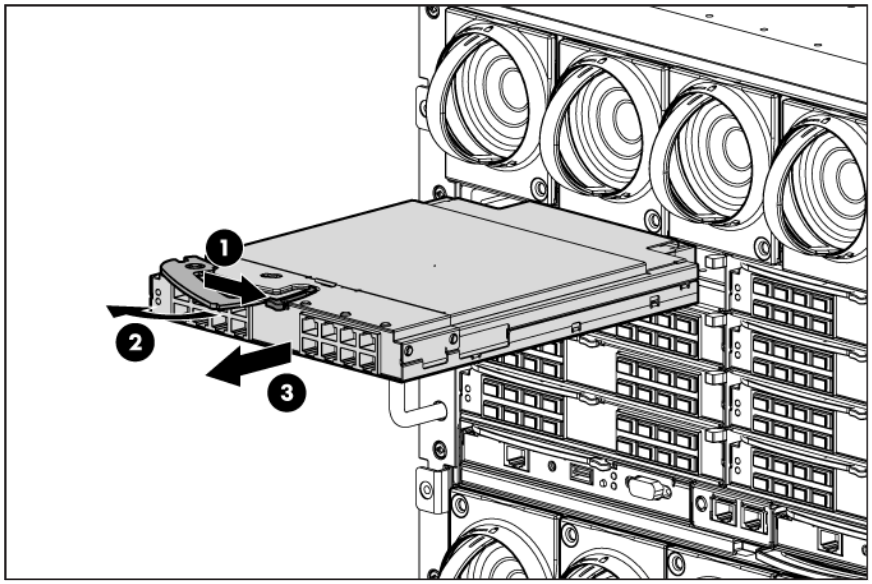

CAUTION: For best cooling practices, do not operate the enclosure for extended periods with more than one component or blank removed. When removing an active component, replace it with a blank.

To replace the component, reverse the removal procedure.

Interconnect bay dividers

To remove the component:

1. Remove the interconnect switches and Pass-Thru modules ("Interconnect switch or Pass-Thru module" on page 39).
2. Remove the interconnect blanks ("Interconnect blank" on page 38).
3. Press the release tab.

4. Remove the interconnect bay divider.

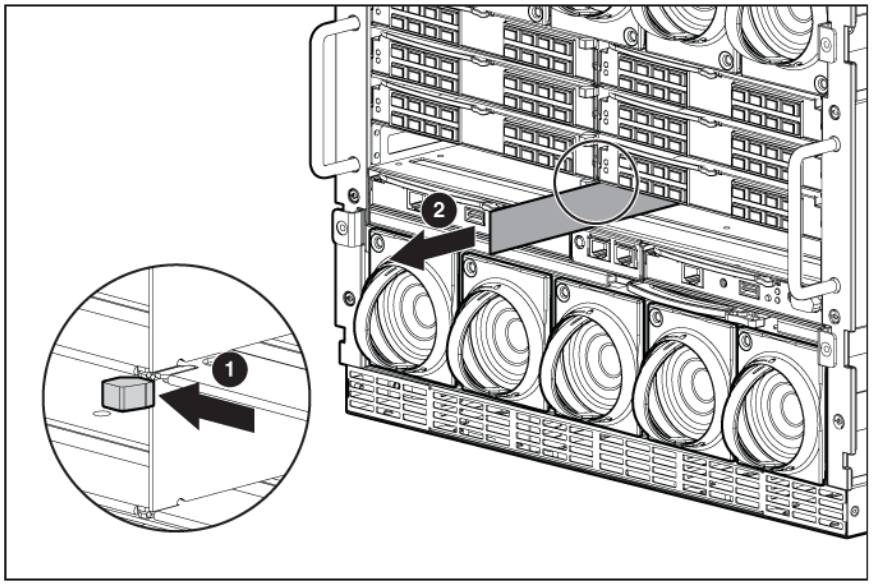

To replace the component, reverse the removal procedure.

Onboard Administrator blank

Remove the component as indicated.

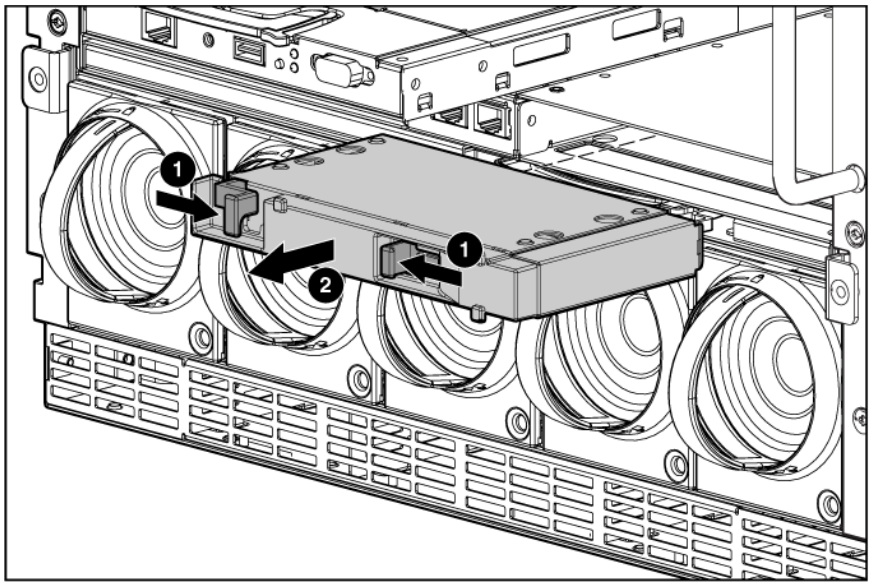

△ **CAUTION:** For best cooling practices, do not operate the enclosure for extended periods with more than one component or blank removed. When removing an active component, replace it with a blank.

To replace the component, reverse the removal procedure.

Onboard Administrator

To remove the component:

1. Disconnect all cables from the component.

2. Press the release tab and open the handle.
3. Remove the Onboard Administrator module.

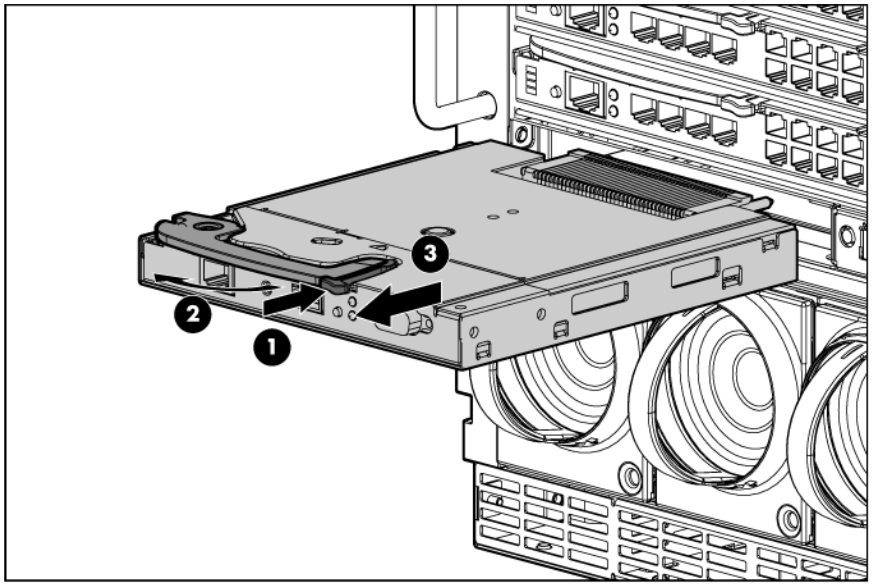

CAUTION: For best cooling practices, do not operate the enclosure for extended periods with more than one component or blank removed. When removing an active component, replace it with a blank.

To replace the component, reverse the removal procedure.

Onboard Administrator tray

To remove the component:

1. Remove the Onboard Administrator modules.
2. Remove the Onboard Administrator blanks ("Onboard Administrator blank" on page 41).
3. Press the release tab and open the handle.
4. Remove the Onboard Administrator tray.

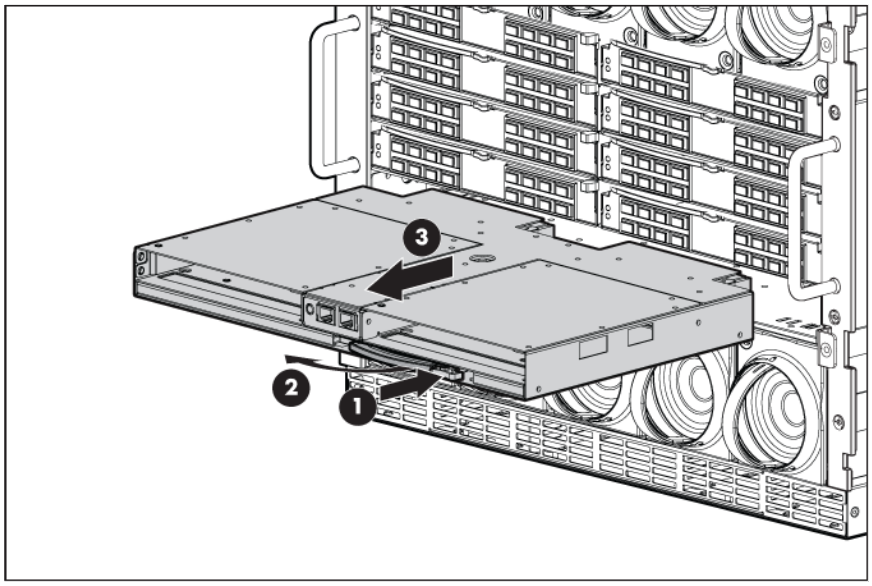

CAUTION: For best cooling practices, do not operate the enclosure for extended periods with more than one component or blank removed. When removing an active component, replace it with a blank.

To replace the component, reverse the removal procedure.

AC input module

To remove the component:

1. Power down the server blades ("Power down the server blades or workstation blades" on page 28).
2. Power down the enclosure (on page 29).
3. Loosen the two slotted T-15 Torx screws that secure the AC input module.
4. Remove the AC input module.

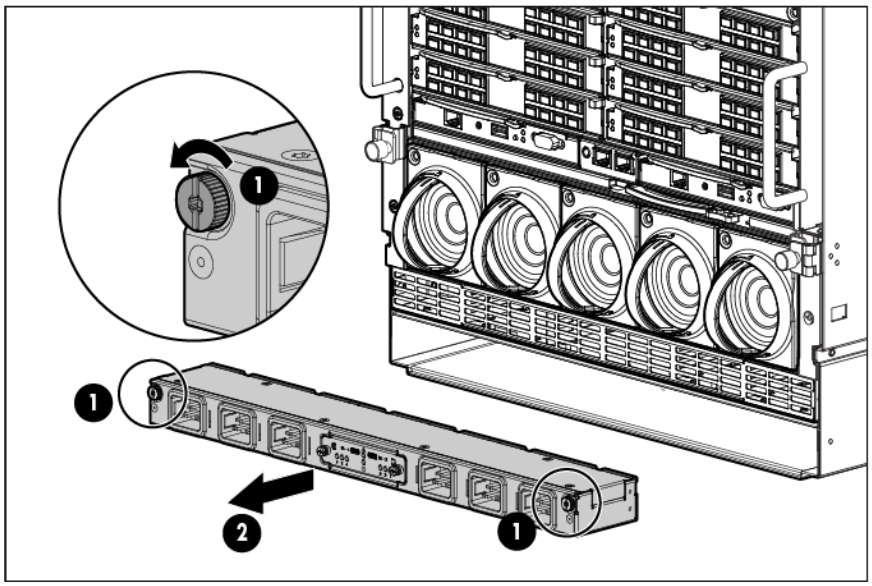

5. Configure the AC input module. For more information, see "Midplane assembly (on page 51)."

To replace the component, reverse the removal procedure.

AC control module

To remove the component:

1. Disconnect all USB connections from the Onboard Administrator to the control module.
2. Loosen the two slotted screws that secure the control module.

3. Remove the control module.

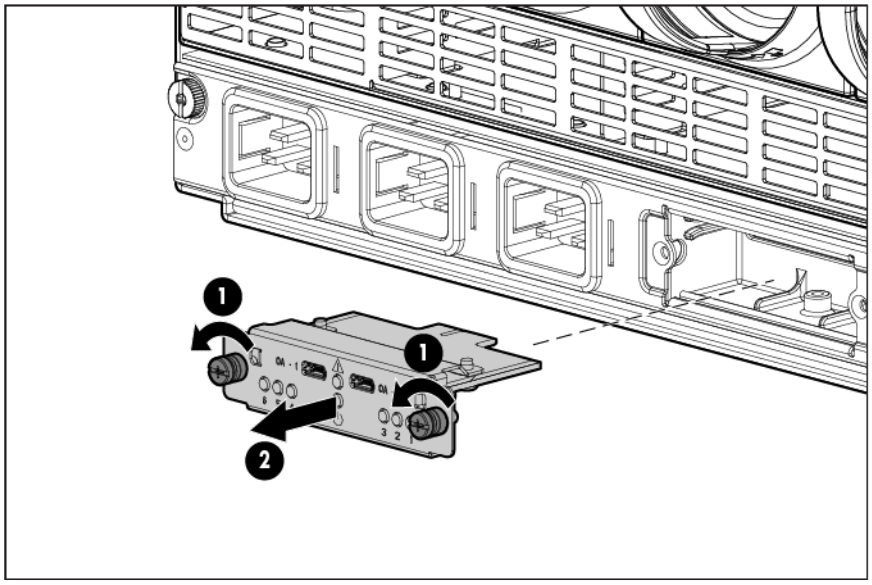

To replace the component, reverse the removal procedure.

Rear cage

WARNING: To reduce the risk of damage to the midplane and component connectors, always remove or disengage and extend all blades and power supplies approximately 8 cm (3 in) before removing or installing the rear cage.

WARNING: To reduce the risk of personal injury or equipment damage, at least two people are needed to safely move the rear cage.

IMPORTANT: When removing components from the rear cage, note their position for later replacement.

To remove the component:

1. Power down the server blades ("Power down the server blades or workstation blades" on page 28).
2. Power down the enclosure (on page 29).
3. Disconnect all cables.
4. Disengage and extend the following components approximately 8 cm (3 in):
   - Half-height and full-height blades ("Half-height or full-height blade" on page 33)
   - Power supplies ("HPE BladeSystem c7000 power supply or power supply blank" on page 29)
5. Remove the fans ("Active Cool 200 fan" on page 37).
6. Remove the interconnect switches and Pass-Thru modules ("Interconnect switch or Pass-Thru module" on page 39).
7. Remove the Onboard Administrator modules.
8. Remove the Onboard Administrator tray.
9. Remove the rear cage.
   a. Loosen the thumbscrews, and then open the hinges completely.

b. Use the handles to extend the rear cage until the release levers engage on both sides of the rear cage.

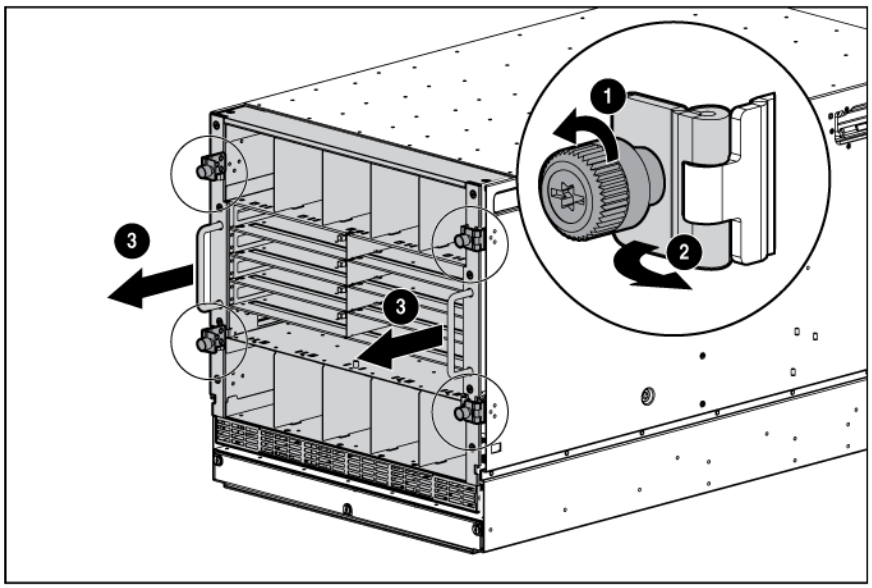

c. Grasp the handholds below the release levers.

d. Disengage the release levers on both sides of the rear cage.

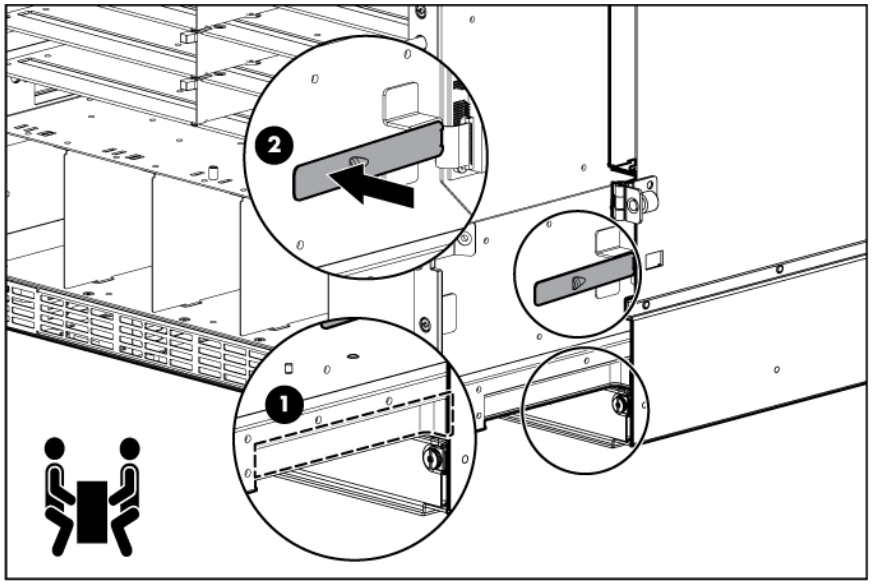

△ **CAUTION:** When removing and lifting the rear cage, always grasp the handholds as far forward as possible. The front end of the rear cage is heavy and the handholds provide a more balanced location to distribute the weight of the cage during lifting.

△ **CAUTION:** When removing the rear cage and midplane assembly, the connectors on the midplane assembly are susceptible to damage. Use caution to avoid damage to the pins and connectors.

e. Use the handholds to extend and remove the rear cage from the enclosure.

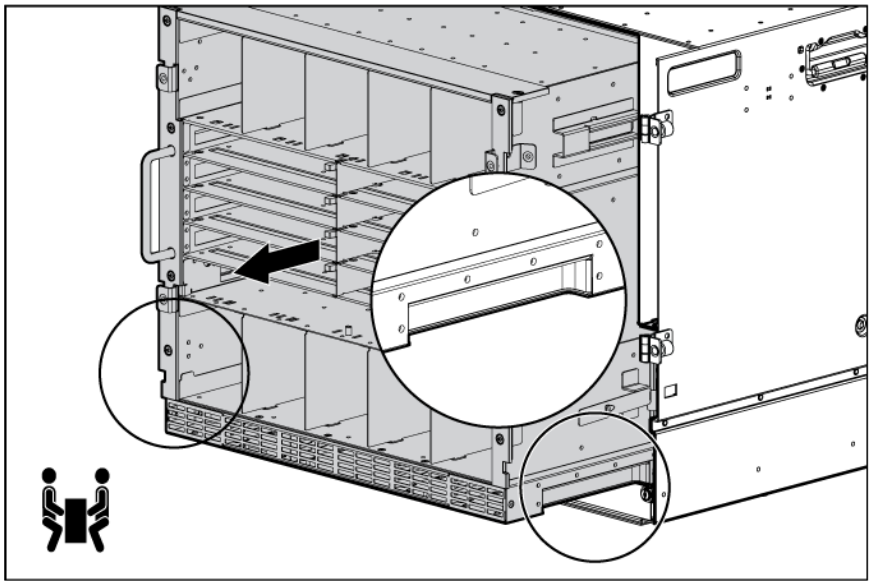

To replace the component, reverse the removal procedure.

Insight Display front-to-rear interconnect board

WARNING: To reduce the risk of damage to the midplane and component connectors, always remove or disengage and extend all blades and power supplies approximately 8 cm (3 in) before removing or installing the rear cage.

To remove the component:

1. Power down the server blades ("Power down the server blades or workstation blades" on page 28).
2. Power down the enclosure (on page 29).
3. Disconnect all cables.
4. Remove the half-height and full-height blades ("Half-height or full-height blade" on page 33).
5. Remove the device bay blanks ("Device bay blank" on page 30).
6. Remove the power supplies ("HPE BladeSystem c7000 power supply or power supply blank" on page 29).
7. Remove the fans ("Active Cool 200 fan" on page 37).
8. Remove the interconnect switches and Pass-Thru modules ("Interconnect switch or Pass-Thru module" on page 39).
9. Remove the Onboard Administrator modules.
10. Remove the Onboard Administrator tray.
11. Remove the rear cage.

WARNING: To reduce the risk of personal injury or equipment damage, at least two people are needed to safely move the rear cage.

12. Remove the three T-15 Torx screws that secure the Insight Display cable center cover, and then remove the cover.

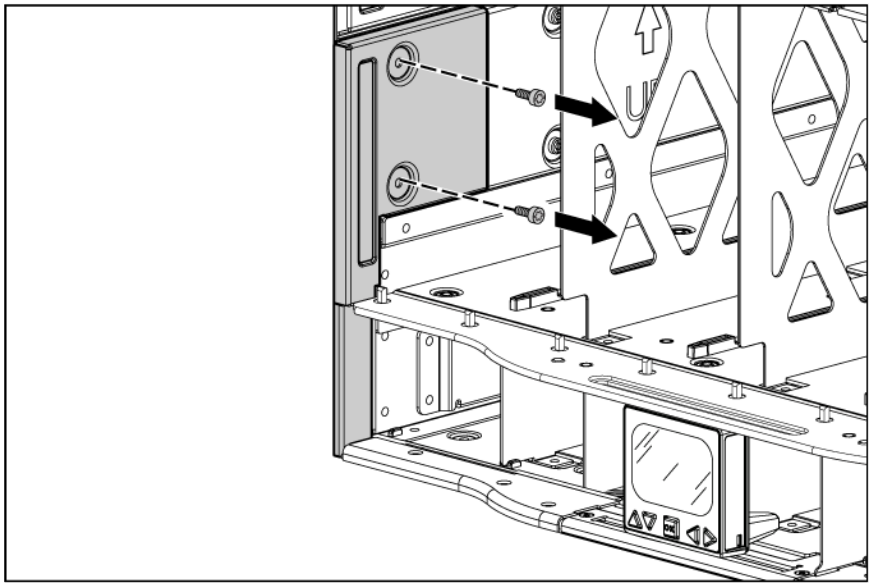

13. Disconnect the Insight Display cable.

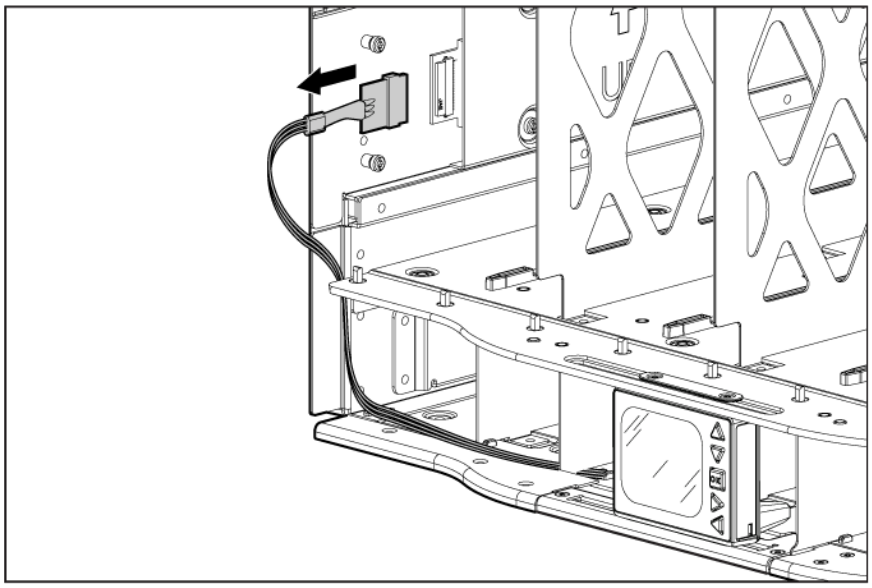

14. Remove the four T-15 Torx screws that secure the interconnect board cover, and then remove the cover.

NOTE: The device bay walls have been removed for clarity.

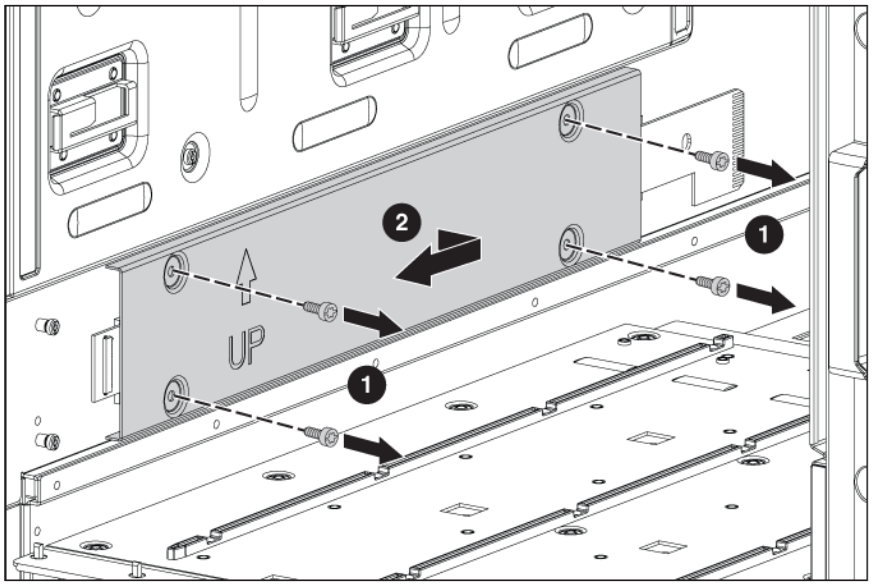

15. Remove the two slotted T-15 Torx screws that secure the interconnect board.
16. Remove the interconnect board.

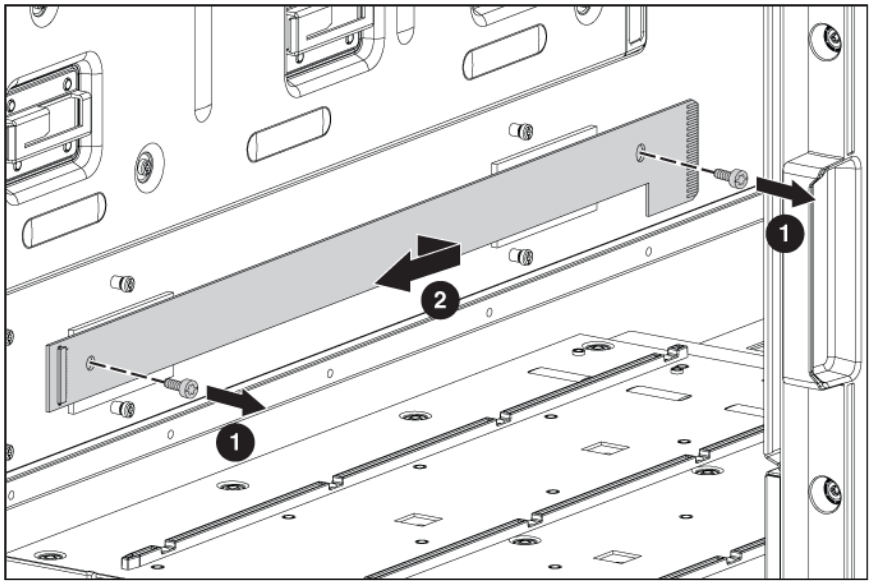

To replace the component, reverse the removal procedure.

Insight Display signal pass-thru board

WARNING: To reduce the risk of damage to the midplane and component connectors, always remove or disengage and extend all blades and power supplies approximately 8 cm (3 in) before removing or installing the rear cage.

To remove the component:

1. Power down the server blades ("Power down the server blades or workstation blades" on page 28).
2. Power down the enclosure (on page 29).
3. Disconnect all cables.
4. Disengage and extend the following components approximately 8 cm (3 in):

- Half-height and full-height blades ("Half-height or full-height blade" on page 33)
- Power supplies ("HPE BladeSystem c7000 power supply or power supply blank" on page 29)

5. Remove the fans ("Active Cool 200 fan" on page 37).
6. Remove the interconnect switches and Pass-Thru modules ("Interconnect switch or Pass-Thru module" on page 39).
7. Remove the Onboard Administrator modules.

   Remove the Onboard Administrator tray.
8. Remove the rear cage.

WARNING: To reduce the risk of personal injury or equipment damage, at least two people are needed to safely move the rear cage.

9. Remove the two T-15 Torx screws that secure the pass-thru board.

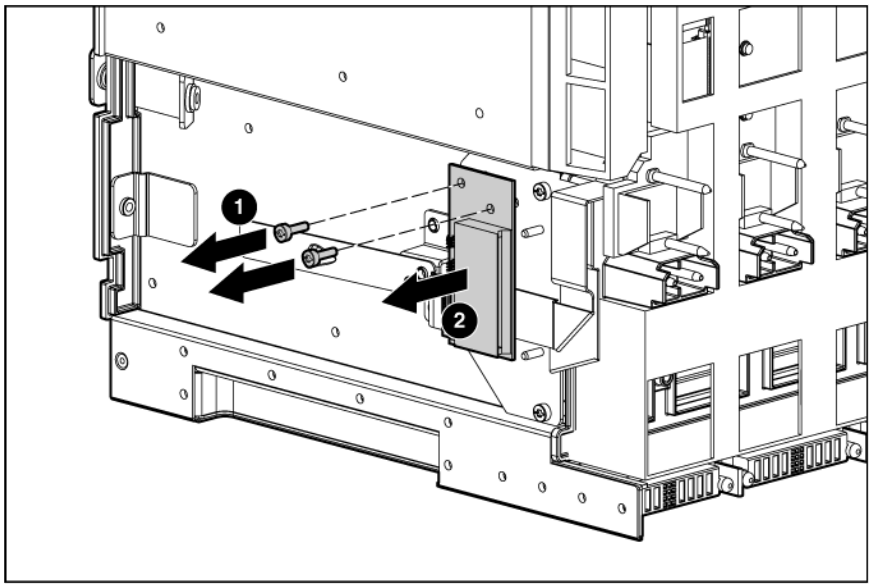

10. Disconnect the pass-thru board from the cable.

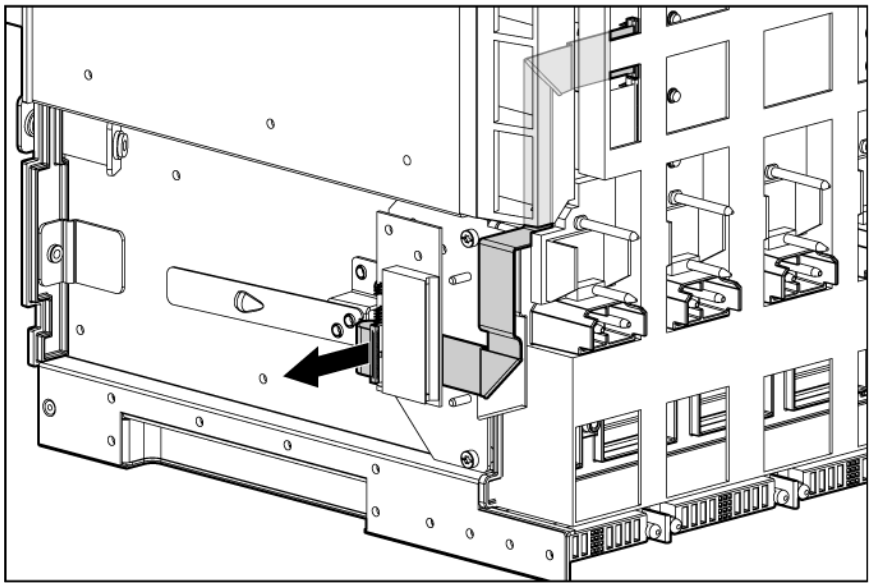

To replace the component, reverse the removal procedure.

Location discovery services board (Platinum models only)

To remove the component:

1. Power down the server blades ("Power down the server blades or workstation blades" on page 28).
2. Power down the enclosure (on page 29).
3. Remove the handle cover.

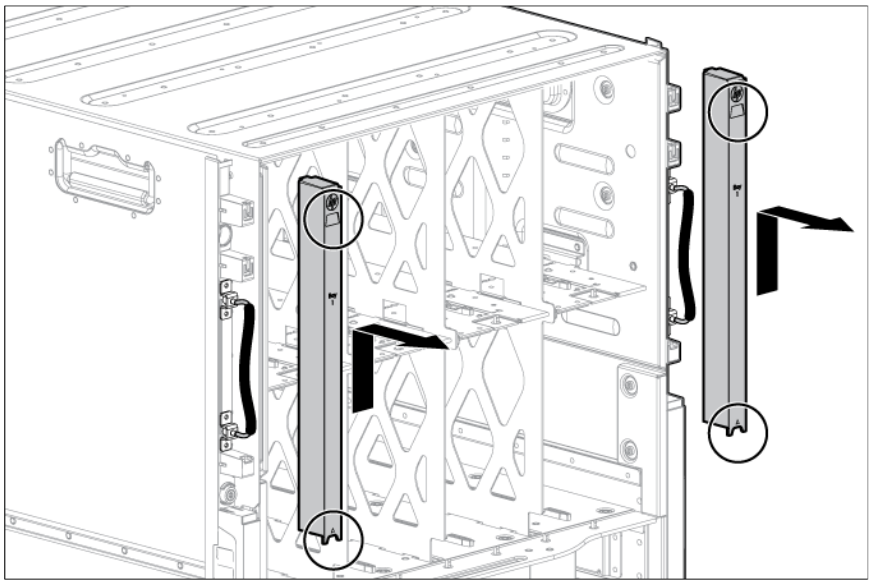

4. Remove the location discovery services board cover.

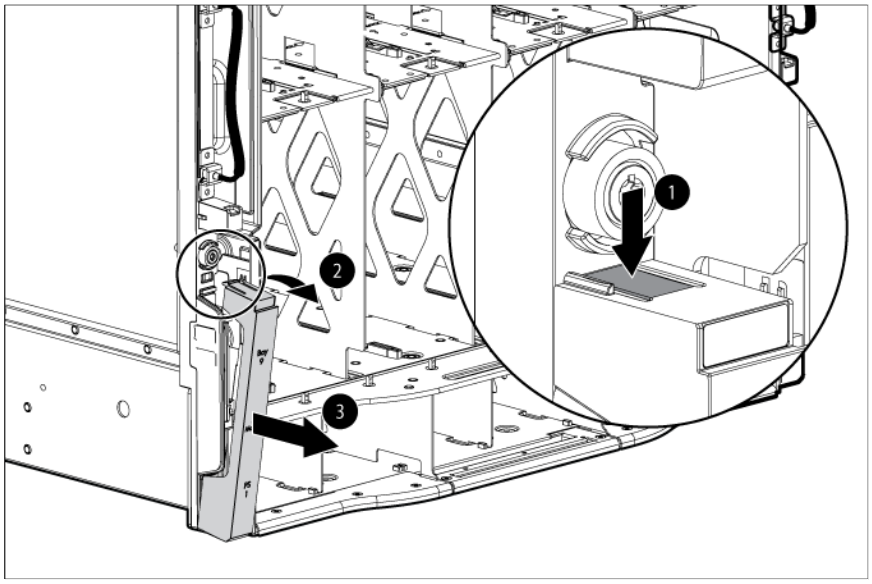

5. Disconnect the cable from the location discovery services board.

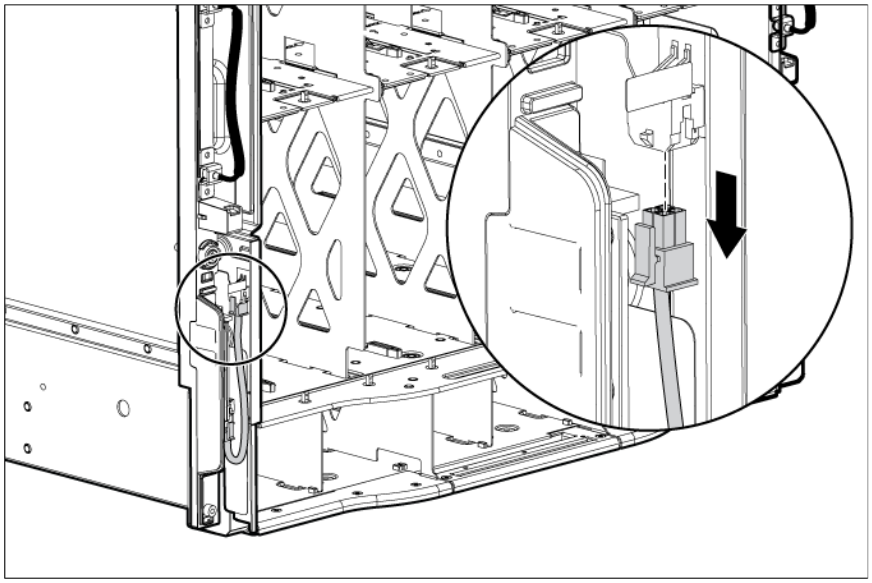

6. Remove the screw, lift up on the board, and then remove the board.

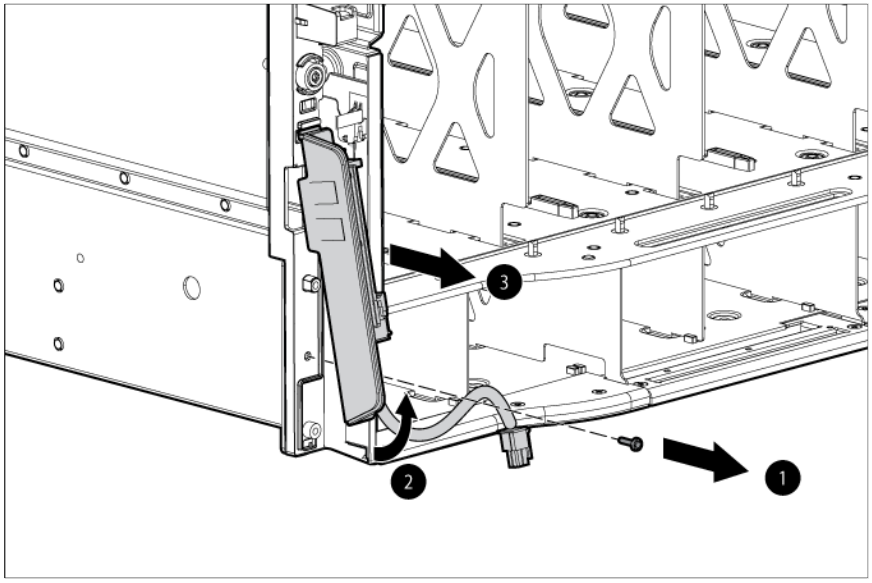

To replace the component, reverse the removal procedure.

Midplane assembly

Before replacing the midplane, locate and record the enclosure serial number and part number, using one of the following methods:

- Locate the enclosure tag on the front, side, or rear of the enclosure.
- Access the Onboard Administrator.
- Log in to the Onboard Administrator CLI and run the command `Show Enclosure Info`. See the *BladeSystem Onboard Administrator Command Line Interface User Guide* for information on accessing the CLI.

WARNING: To reduce the risk of damage to the midplane and component connectors, always remove or disengage and extend all blades and power supplies approximately 8 cm (3 in) before removing or installing the rear cage.

CAUTION: The firmware included in Onboard Administrator version 3.20 and later automatically restores the enclosure identity, including the serial number, PID, and PDU type, if a midplane assembly replacement is detected. This firmware feature requires that the original Onboard Administrator modules and all original fans be reinstalled along with all power supplies before installing any other blade or interconnect module. All power supply modules can be replaced while the enclosure is powered off without affecting the ability of the Onboard Administrator to automatically restore enclosure identity.
VC, Virtual Connect Enterprise Manager, and Insight Control use the enclosure serial number as a critical key. If you replace the midplane assembly without ensuring that the serial number is restored prior to installing the VC modules and server blades, then the VC domain is deleted and all server network and SAN connections are disabled .

To remove the midplane assembly:

1. Power down the blades (such as servers, workstation, storage, and so on) ("Power down the server blades or workstation blades" on page 28).
2. Power down the enclosure (on page 29).

   NOTE: Be sure to note the location of each removed component so it can be returned to its original location after the midplane assembly is replaced.

3. Disconnect all cables from the enclosure.
4. Disengage and extend the following components approximately 8 cm (3 in):
   - Half-height and full-height blades ("Half-height or full-height blade" on page 33)
   - Power supplies ("HPE BladeSystem c7000 power supply or power supply blank" on page 29)
     - The power supply in bay 3 or 4 must be completely removed, and then the Insight Display must be moved in front of that power supply bay to enable the other power supplies to be removed or extended.
5. Remove the enclosure fans ("Active Cool 200 fan" on page 37).
6. Remove the interconnect switches and Pass-Thru modules ("Interconnect switch or Pass-Thru module" on page 39).
7. Remove the Onboard Administrator modules.
8. Remove the Onboard Administrator tray.

   CAUTION: When removing the rear cage and midplane assembly, the connectors on the midplane assembly are susceptible to damage. Use caution to avoid damage to the pins and connectors.

9. Remove the rear cage.

   WARNING: To reduce the risk of personal injury or equipment damage, at least two people are needed to safely move the enclosure or the front cage.

10. Remove the Insight Display signal pass-thru board.

    IMPORTANT: For platinum model enclosures, it s not necessary to remove the midplane assembly from the rear cage. The midplane spare part includes the rear cage.

11. Remove the eight slotted T-15 Torx screws that secure the midplane assembly, and then remove the midplane assembly from the rear cage.

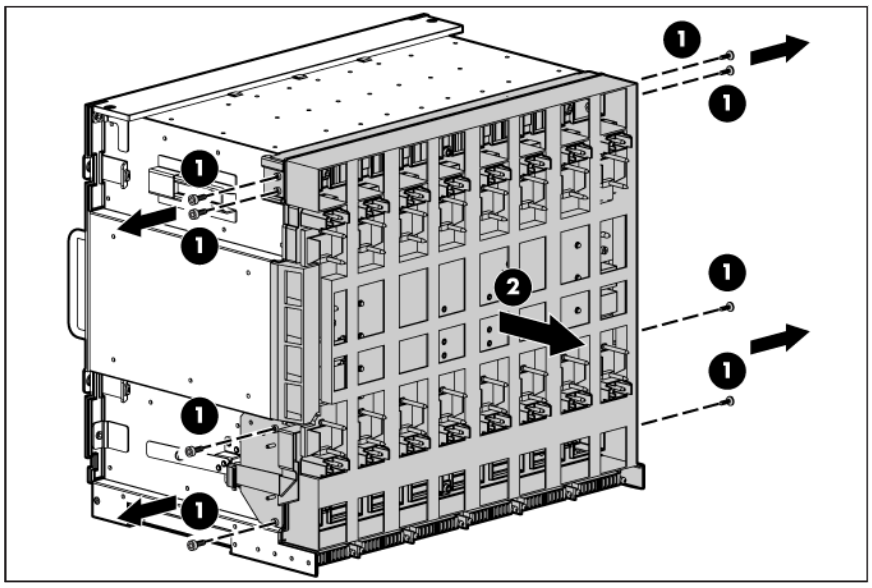

To replace the midplane assembly, reverse the removal procedure.

CAUTION: The LCD cable must be correctly routed for proper operation.

To route the LCD cable:

1. When installing the midplane assembly onto the rear cage assembly, ensure the LCD cable is routed behind the interconnect module rubber boot and through the sheet-metal gaps. Route the cable as shown in the following figure.

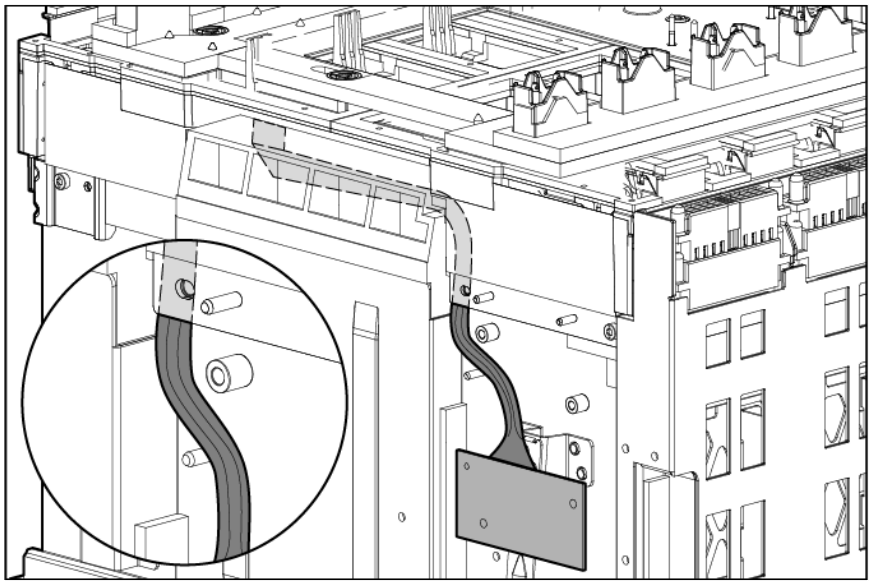

2. Route the cable between the Insight Display signal pass-thru board pin guide and the screw mounts. Be careful not to pinch the cable between the Insight Display signal pass-thru board and the screw mount as shown in the following figure.

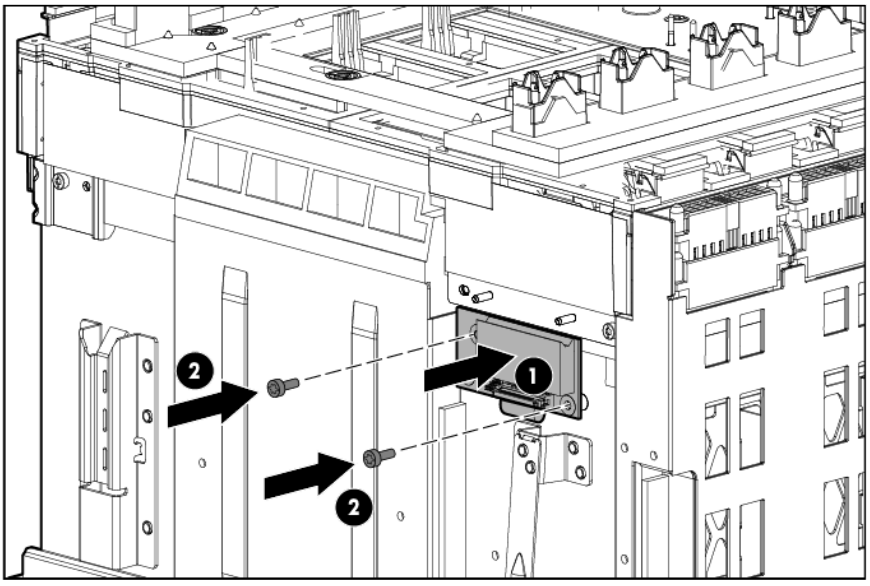

3. Place the Insight Display signal pass-thru board properly over the guide pin and the screw mount and screw the Insight Display signal pass-thru board to the rear cage assembly.

To verify the enclosure serial number:

> △ **CAUTION:** Failure to complete the following procedure might cause inaccurate or incomplete information to appear in HPE SIM and Onboard Administrator.

1. Using the Insight Display, navigate to the **Enclosure Info** screen.
2. Verify that the enclosure serial number matches the enclosure serial number on the label on the enclosure mounting bracket.
   - If the enclosure serial number matches the label, continue to step 7.
   - If the enclosure serial number does not appear or does not match the label, continue to step 3 to manually update the enclosure identity using the Onboard Administrator CLI.
3. Use the Onboard Administrator service port address found on the **Enclosure Info** screen to log in to the Onboard Administrator CLI with the `Administrator` local account password by using one of the following options:
   - A serial cable attached to the Onboard Administrator serial port
   - An Ethernet CAT5 cable attached to the enclosure service port that is the enclosure link uplink port
4. Enter the `SET ENCLOSURE PART_NUMBER X` command, where *X* represents the 10-digit enclosure PID number found on the enclosure front label.
5. Enter the `SET ENCLOSURE SERIAL_NUMBER Y` command, where *Y* represents the 10-digit serial number found on the enclosure front label.
6. Enter the `SET ENCLOSURE PDU_TYPE Z` command, where *Z* represents the number of the appropriate power configuration:
   - 1—Single phase power, U.S.
   - 2—Three-phase power, U.S.
   - 3—Three-phase power, International
   - 4—DC power
   - 5—Single Phase Intelligent PDU

7. Install all VC Ethernet modules, VC-FC modules, and all other interconnect modules in the same bay they were removed from.
8. Reconnect all cables to those modules to the same ports they were removed from.
9. Wait two minutes.
10. Install all the server blades into the same bays they were removed from.

Cabling

Single-phase AC configuration

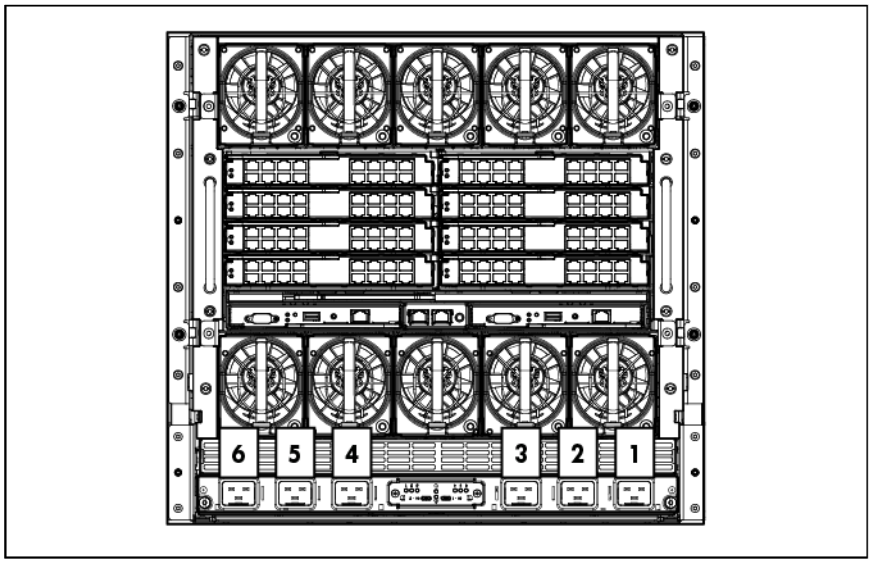

Three-phase AC configuration

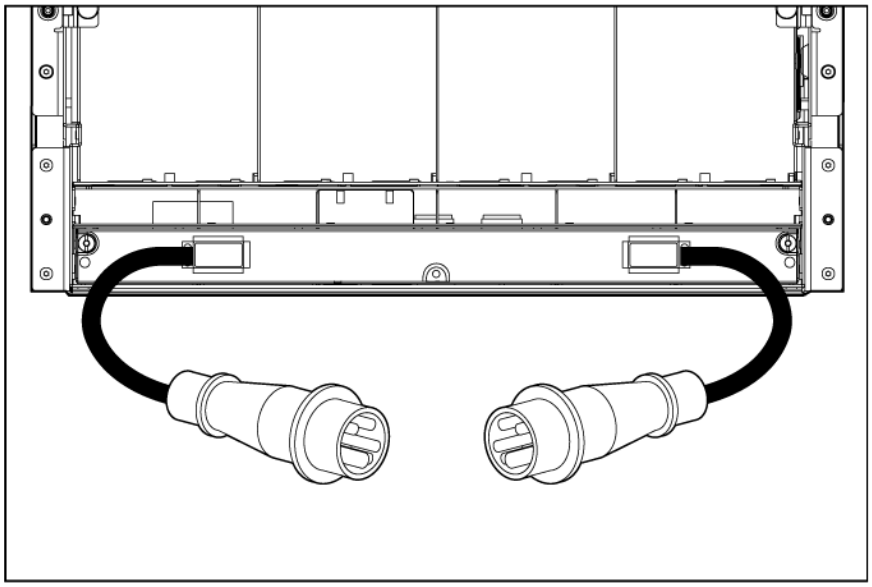

HPE BladeSystem c7000 Enclosure DC configuration

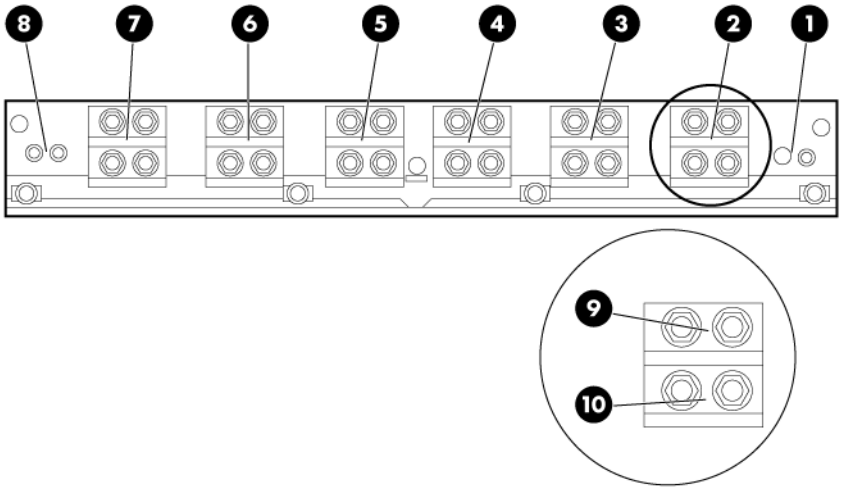

Item	Description
1	Chassis grounding lugs
2	DC connectors for power supply bay 1
3	DC connectors for power supply bay 2
4	DC connectors for power supply bay 3
5	DC connectors for power supply bay 4
6	DC connectors for power supply bay 5
7	DC connectors for power supply bay 6
8	Chassis grounding lugs
9	-48 VDC power connections
10	DC return power connections

Onboard Administrator cabling

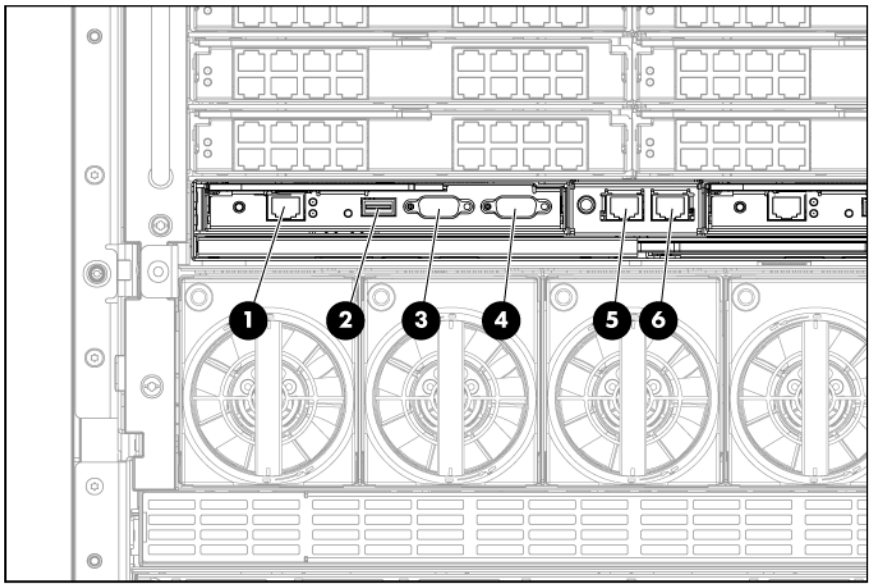

Item	Connector	Description
1	OA/iLO	Ethernet 1000BaseT RJ45 connector, which provides Ethernet access to the Onboard Administrator and the iLO on each server blades or workstation blades. Also supports interconnect modules with management processors configured to use the enclosure management network. Autonegotiates 1000/100/10 or can be configured to force 100Mb or 10Mb full duplex.
2	USB	USB 2.0 Type A connector used for connecting supported USB devices such as DVD drives, USB key drives, or a keyboard or mouse for enclosure KVM use. To connect multiple devices, a USB hub (not included) is required.
3	Serial connector	Serial RS232 DB-9 connector with PC standard pinout. Connect a computer with a null-modem serial cable to the Onboard Administrator command line interface (CLI).
4	VGA connector	VGA DB-15 connector with PC standard pinout. To access the KVM menu or Onboard Administrator CLI, connect a VGA monitor or rack KVM monitor for enclosure KVM.
5	Enclosure link-down port	Connects to the enclosure link-up port on the enclosure below with a CAT5 patch cable.
6	Enclosure link-up port and service port	Connects to the enclosure link-down port on the enclosure above with a CAT5 patch cable. On a stand-alone enclosure or the top enclosure in a series of linked enclosures, the top enclosure link-up port functions as a service port.

Onboard Administrator with KVM cabling

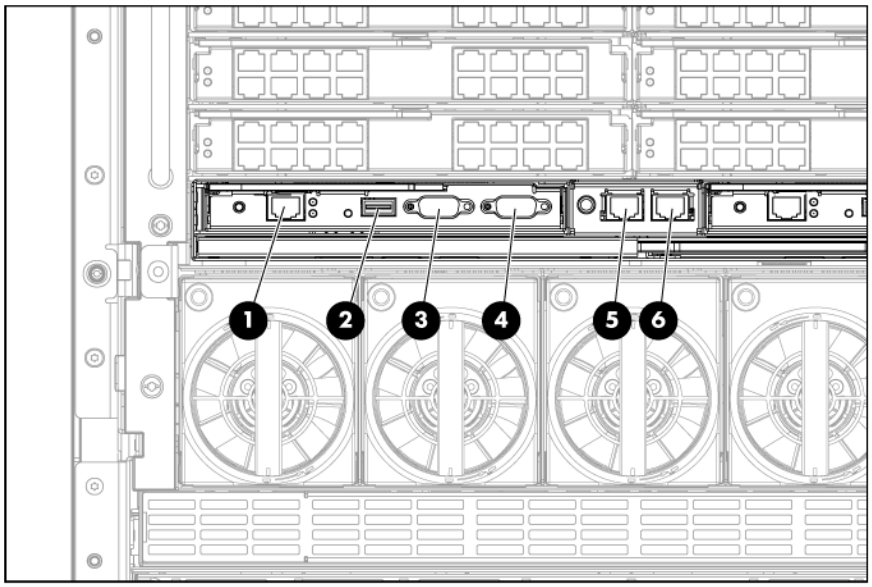

Item	Connector	Description
1	OA/iLO	Ethernet 1000BaseT RJ45 connector, which provides Ethernet access to the Onboard Administrator and the iLO on each server blades or workstation blades. Also supports interconnect modules with management processors configured to use the enclosure management network. Autonegotiates 1000/100/10 or can be configured to force 100Mb or 10Mb full duplex.
2	USB	USB 2.0 Type A connector used for connecting supported USB devices such as DVD drives, USB key drives, or a keyboard or mouse for enclosure KVM use. To connect multiple devices, a USB hub (not included) is required.
3	Serial connector	Serial RS232 DB-9 connector with PC standard pinout. Connect a computer with a null-modem serial cable to the Onboard Administrator command line interface (CLI).
4	VGA connector	VGA DB-15 connector with PC standard pinout. To access the KVM menu or Onboard Administrator CLI, connect a VGA monitor or rack KVM monitor for enclosure KVM.
5	Enclosure link-down port	Connects to the enclosure link-up port on the enclosure below with a CAT5 patch cable.
6	Enclosure link-up port and service port	Connects to the enclosure link-down port on the enclosure above with a CAT5 patch cable. On a stand-alone enclosure or the top enclosure in a series of linked enclosures, the top enclosure link-up port functions as a service port.

Diagnostic tools

Troubleshooting resources

The *BladeSystem c-Class Enclosure Troubleshooting Guide* provides procedures and solutions for troubleshooting BladeSystem c-Class enclosures. This guide explains how to use the Insight Display to troubleshoot enclosures, and it includes a flowchart to help you navigate the troubleshooting process. To view the guide, see the Hewlett Packard Enterprise website (http://www.hpe.com/support/BladeSystem_Enclosure_TSG_en).

You can also view possible solutions on the Hewlett Packard Enterprise Support Center website (http://www.hpe.com/support/hpesc).

Onboard Administrator errors

If an error occurs, the Onboard Administrator displays an error message on the Insight Display. In addition, the Onboard Administrator also displays error messages in e-mail alerts and SNMP traps when this feature has been configured. For more information, see the *BladeSystem Onboard Administrator User Guide*.

The Onboard Administrator provides a detailed SHOW ALL report on the full enclosure configuration, status, and inventory available. This report can be generated in two ways:

- **OA GUI>Enclosure settings>Enclosure configuration scripts**
- **OA CLI>Execute the following CLI command: SHOW ALL**

Review this inventory report where appropriate and have this report on hand available when contacting Hewlett Packard Enterprise Support. For more information, see the Hewlett Packard Enterprise website (http://www.hpe.com/info/OAlog).

Server blade diagnostic tools

HPE Insight Diagnostics

Insight Diagnostics is a proactive server blades or workstation blades management tool, available in both offline and online versions, that provides diagnostics and troubleshooting capabilities to assist IT administrators who verify server blades or workstation blades installations, troubleshoot problems, and perform repair validation.

Insight Diagnostics Offline Edition performs various in-depth system and component testing while the OS is not running. To run this utility, launch the SmartStart CD.

Insight Diagnostics Online Edition is a web-based application that captures system configuration and other related data needed for effective server blades or workstation blades management. Available in Microsoft® Windows® and Linux versions, the utility helps to ensure proper system operation.

For more information or to download the utility, refer to the Hewlett Packard Enterprise website (http://www.hpe.com/servers/diags).

HPE Insight Diagnostics survey functionality

Insight Diagnostics ("HPE Insight Diagnostics" on page 60) provides survey functionality that gathers critical hardware and software information on ProLiant server blades or workstation bladess.

This functionality supports operating systems that may not be supported by the server blades or workstation blades. For operating systems supported by the server blades or workstation blades, see the Hewlett Packard Enterprise website (http://www.hpe.com/info/supportos).

If a significant change occurs between data-gathering intervals, the survey function marks the previous information and overwrites the survey data files to reflect the latest changes in the configuration.

Survey functionality is installed with every SmartStart-assisted Insight Diagnostics installation, or it can be installed through the HPE PSP.

NOTE: The current version of SmartStart provides the memory spare part numbers for the server blades or workstation blades. To download the latest version, see the Hewlett Packard Enterprise website (http://www.hpe.com/support/hpesc).

Integrated Management Log

The IML records hundreds of events and stores them in an easy-to-view form. The IML timestamps each event with 1-minute granularity.

You can view recorded events in the IML in several ways, including the following:

- From within SIM
- From within operating system-specific IML viewers:
  - For Windows®: IML Viewer
  - For Linux: IML Viewer Application
- From within the iLO user interface
- From within Insight Diagnostics ("HPE Insight Diagnostics" on page 60)
- From within the Onboard Administrator GUI

  For more information, see the *BladeSystem Onboard Administrator User Guide* on the Hewlett Packard Enterprise website (http://www.hpe.com/info/bladesystem/docs).
- From the Onboard Administrator CLI

  See the *BladeSystem Onboard Administrator Command Line Interface User Guide* for information on accessing the CLI.

For more information, see the Management CD in the ProLiant Essentials Foundation Pack.

Array Diagnostic Utility

The HPE Array Diagnostics Utility is a web-based application that creates a report of all Hewlett Packard Enterprise storage controllers and disk drives. This report provides vital information to assist in identifying faults or conditions that may require attention. ADU can be accessed from the SmartStart CD or downloaded from the Hewlett Packard Enterprise website (http://www.hpe.com).

Component identification

Enclosure front components

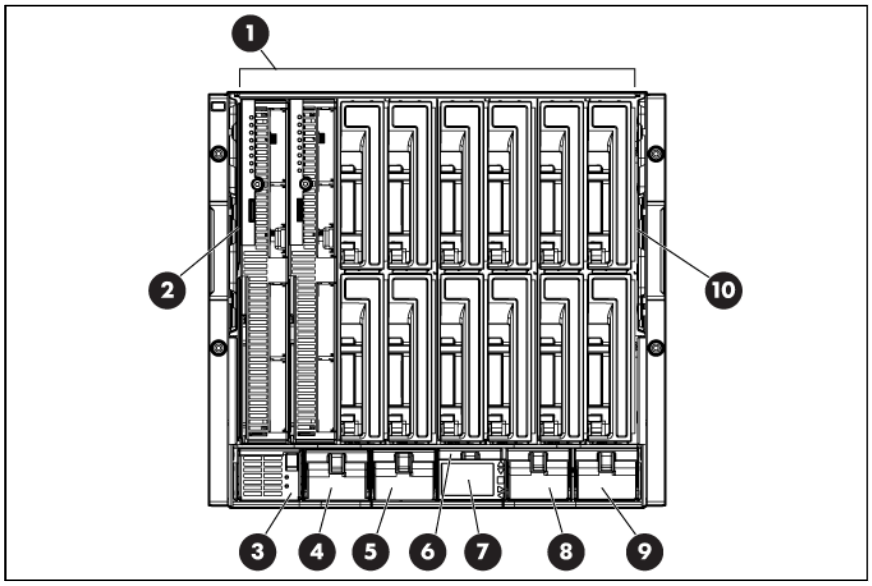

Item	Description
1	Device bays*
2	Air intake slot (Do not block.)
3	Power supply bay 1
4	Power supply bay 2
5	Power supply bay 3
6	Power supply bay 4
7	Insight Display
8	Power supply bay 5
9	Power supply bay 6
10	Air intake slot (Do not block.)

*For more information, see "Device bay numbering (on page 62)."

Device bay numbering

Each enclosure requires interconnects to provide network access for data transfer. Interconnects reside in bays located on the rear of the enclosure. Be sure to review device bay numbering to determine which external network connections on the interconnects are active.

IMPORTANT: When looking at the rear of the enclosure, front device bay numbering is reversed.

Full-height device bay numbering

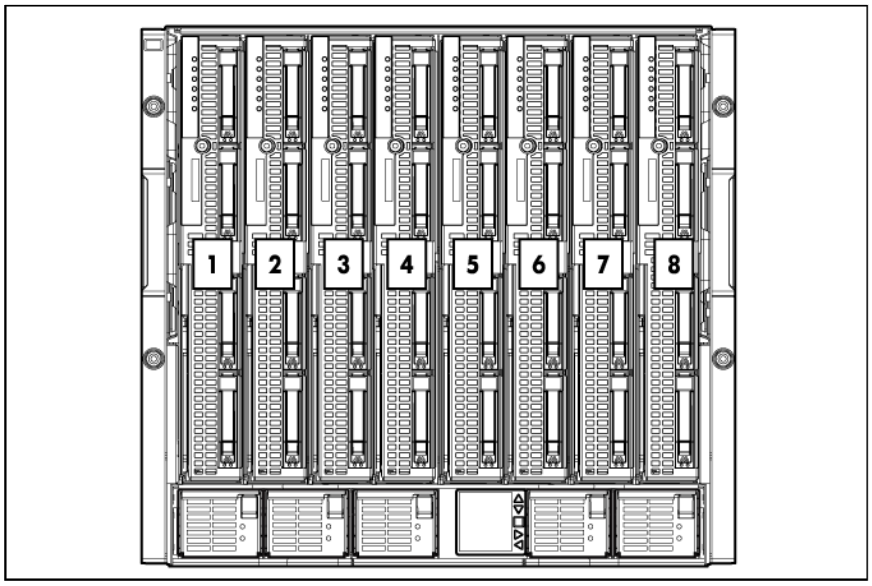

Half-height device bay numbering

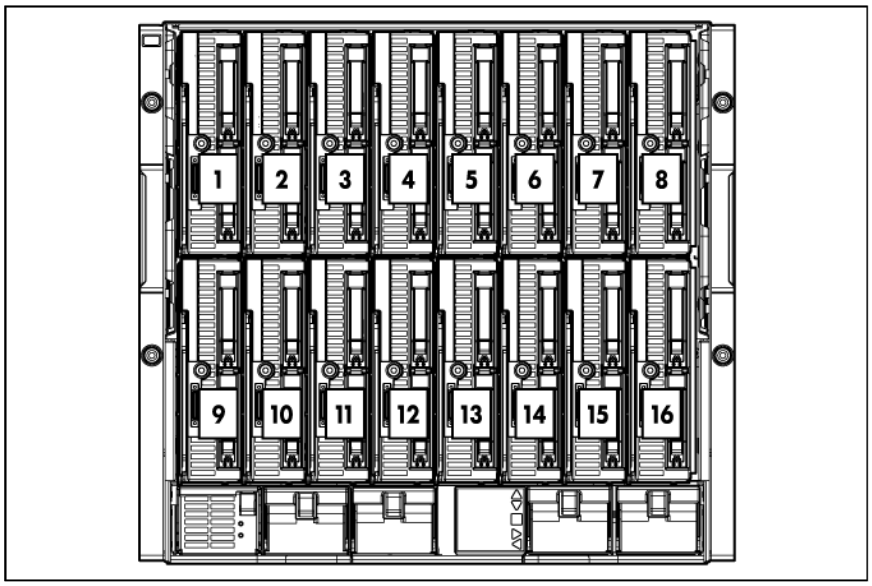

Power supply LEDs

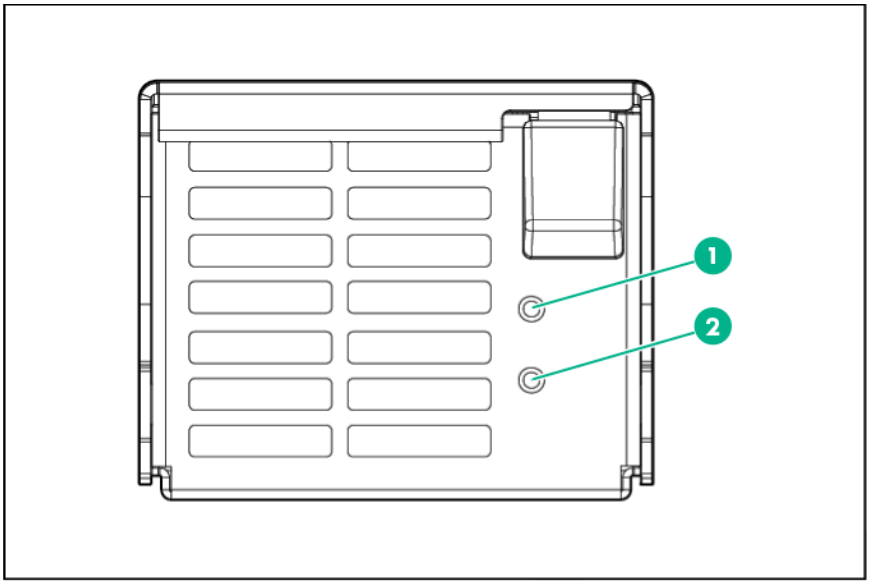

Power LED 1 (green)	Fault LED 2 (amber)	Condition
Off	Off	No AC power to the power supply
On	Off	Normal
Off	On	Power supply failure

Power supply bay numbering

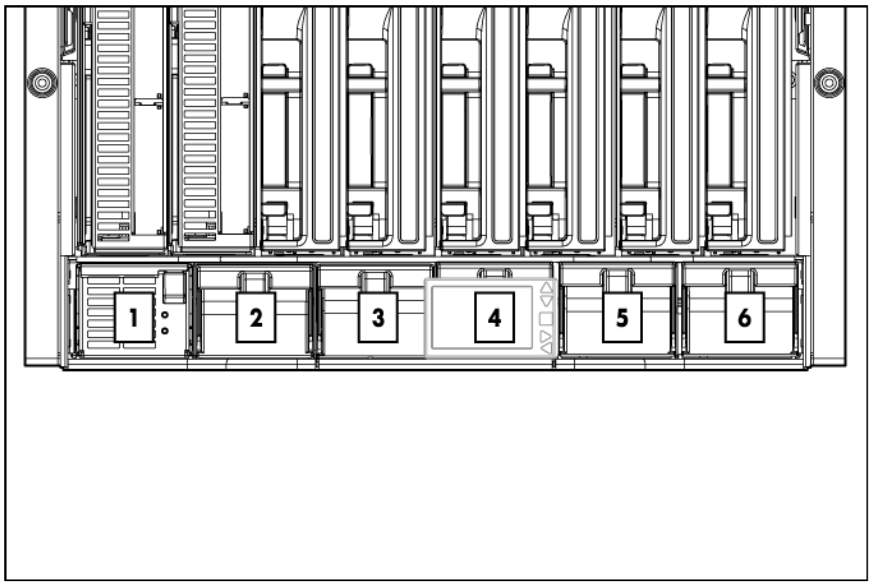

HPE BladeSystem Insight Display

Insight Display overview

The Insight Display enables the rack technician to configure the enclosure initially. It also provides information about the health and operation of the enclosure. See the *BladeSystem Onboard Administrator User Guide* for additional information.

The Insight Display background color varies with the condition of the enclosure health:

- Blue—The Insight Display background illuminates blue when the enclosure UID is active. The enclosure UID is automatically turned on when the enclosure is powered up for the first time and can be turned on by selecting **Turn Enclosure UID On** from the Main Menu or by pressing the enclosure UID button on the rear of the enclosure.

  When the enclosure UID is on, the Insight Display flashes after 2 minutes of inactivity. Pressing any button on the Insight Display stops the flashing and reactivates the screen.

- Green—The Insight Display background illuminates green when no error or alert conditions exist and the enclosure is operating normally. After 2 minutes of inactivity, the Insight Display light turns off. Pressing any button on the Insight Display reactivates the screen.

- Amber—The Insight Display background illuminates amber when the Onboard Administrator detects an error or alert condition. Depending on the error, the component is displayed in red or yellow on the Health Summary screen.

  After 2 minutes of inactivity, the Insight Display background flashes amber, indicating an error or alert condition exists. If the enclosure UID is on and an error or alert condition exists, the Insight Display illuminates blue because the enclosure UID takes priority over the alert. Pressing any button on the Insight Display reactivates the screen.

- Dark (no power)—The Insight Display has a 2-minute inactivity period. If no action is taken and no alert condition exists, the enclosure UID is off, or the chat mode has not been activated, the screen light turns off after 2 minutes. Pressing any button on the Insight Display reactivates the screen.

The Enclosure Health icon is located on the bottom left corner of every screen, indicating the enclosure health. To access the Health Summary screen from any Insight Display screen, navigate the cursor to the Enclosure Health icon and press **OK**.

For information on driver and firmware updates, see the Hewlett Packard Enterprise website (http://www.hpe.com/info/blades/).

HPE BladeSystem Insight Display components

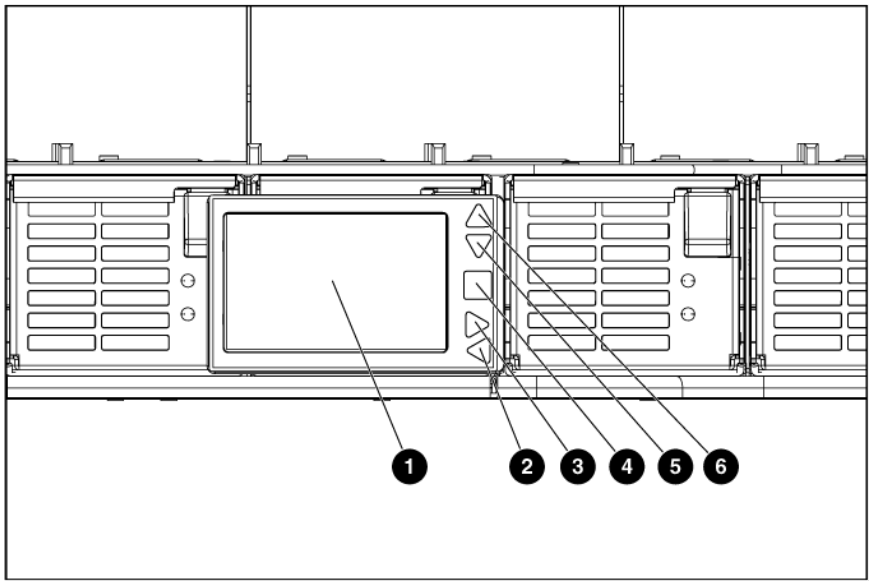

Item	Description	Function
1	Insight Display screen	Displays Main Menu error messages and instructions
2	Left arrow button	Moves the menu or navigation bar selection left one position
3	Right arrow button	Moves the menu or navigation bar selection right one position
4	OK button	Accepts the highlighted selection and navigates to the selected menu
5	Down arrow button	Moves the menu selection down one position
6	Up arrow button	Moves the menu selection up one position

Enclosure rear components

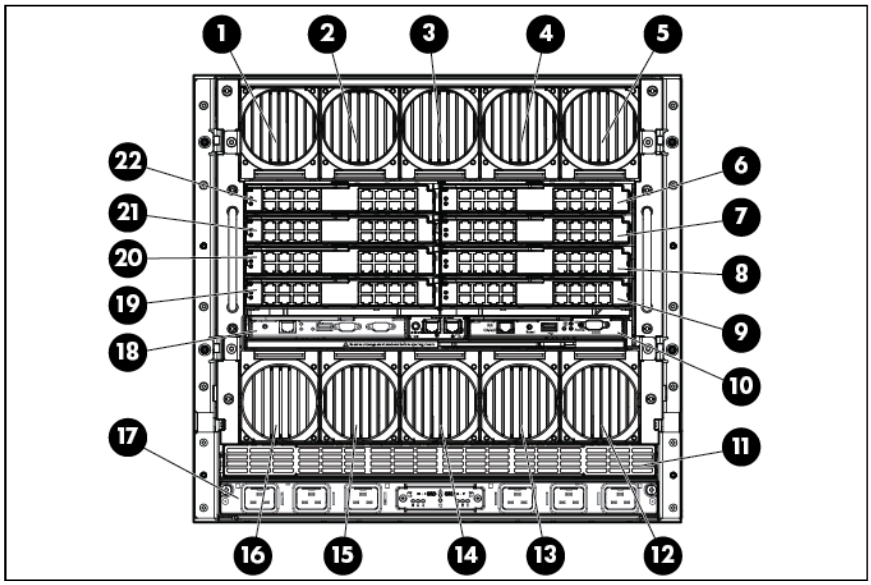

Item	Description
1	Fan bay 1
2	Fan bay 2

Item	Description
3	Fan bay 3
4	Fan bay 4
5	Fan bay 5
6	Interconnect bay 2
7	Interconnect bay 4
8	Interconnect bay 6
9	Interconnect bay 8
10	Onboard Administrator bay 2
11	Power supply exhaust vent (do not block)
12	Fan bay 10
13	Fan bay 9
14	Fan bay 8
15	Fan bay 7
16	Fan bay 6
17	AC power connectors
18	Onboard Administrator bay 1
19	Interconnect bay 7
20	Interconnect bay 5
21	Interconnect bay 3
22	Interconnect bay 1

Interconnect module bay numbering

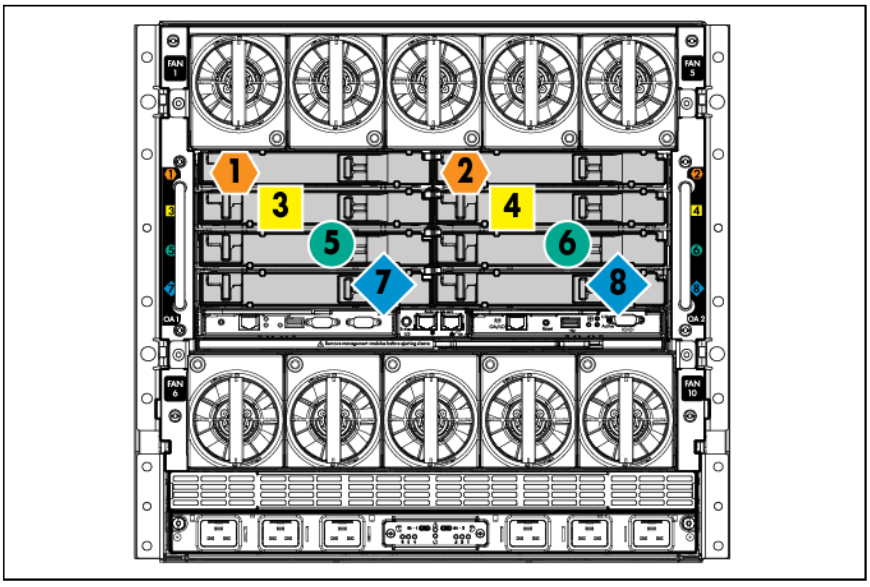

Server blade signal	Interconnect bay number	Interconnect bay label
NICs 1, 2, 3, and 4 (embedded)	1, 2	
Mezzanine 1	3, 4	
Mezzanine 2	5, 6 and then 7, 8	
Mezzanine 3	7, 8 and then 5, 6	

NOTE: For information on the location of LEDs and ports on individual interconnect modules, see the documentation that ships with the interconnect module.

If a four-port option card is installed in mezzanine slot 2, then ports 1 and 2 are connected to interconnect bays 5 and 6, respectively, and ports 3 and 4 are connected to interconnect bays 7 and 8, respectively.

If a four-port option card is installed in mezzanine slot 3 in a full-height server blades or workstation blades, then ports 1 and 2 are connected to interconnect bays 7 and 8, respectively, and ports 3 and 4 are connected to interconnect bays 5 and 6, respectively.

Onboard Administrator components

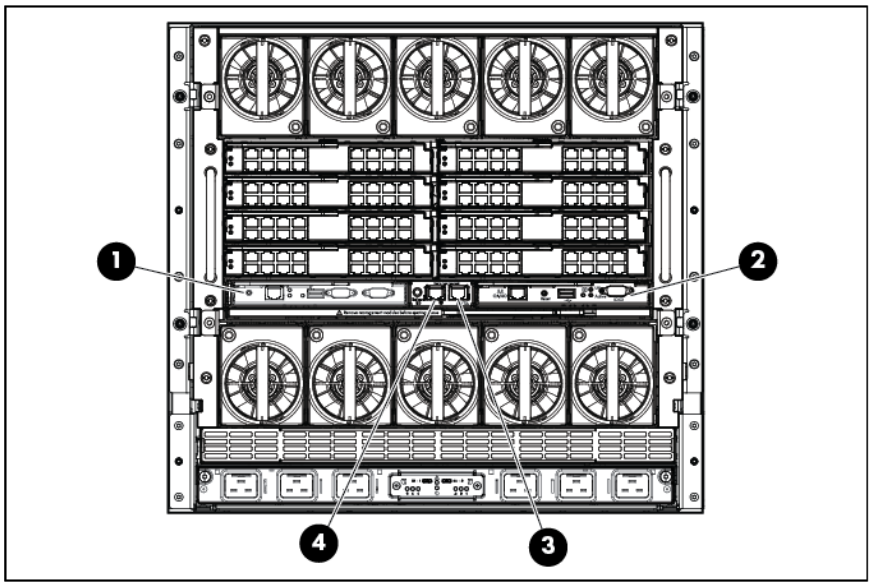

Item	Description
1	Onboard Administrator bay 1
2	Onboard Administrator bay 2 (redundant, if used)
3	Enclosure link-up port
4	Enclosure link-down port

Onboard Administrator LEDs and buttons

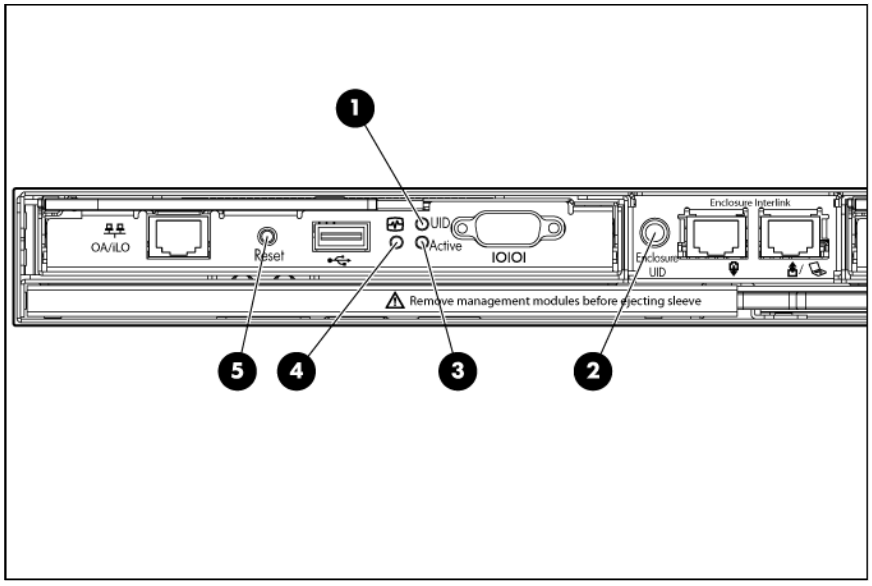

Item	Description
1	Onboard Administrator UID LED
2	Enclosure UID LED and UID button
3	Onboard Administrator active LED
4	Onboard Administrator health LED
5	Onboard Administrator reset button

Onboard Administrator with KVM LEDs and buttons

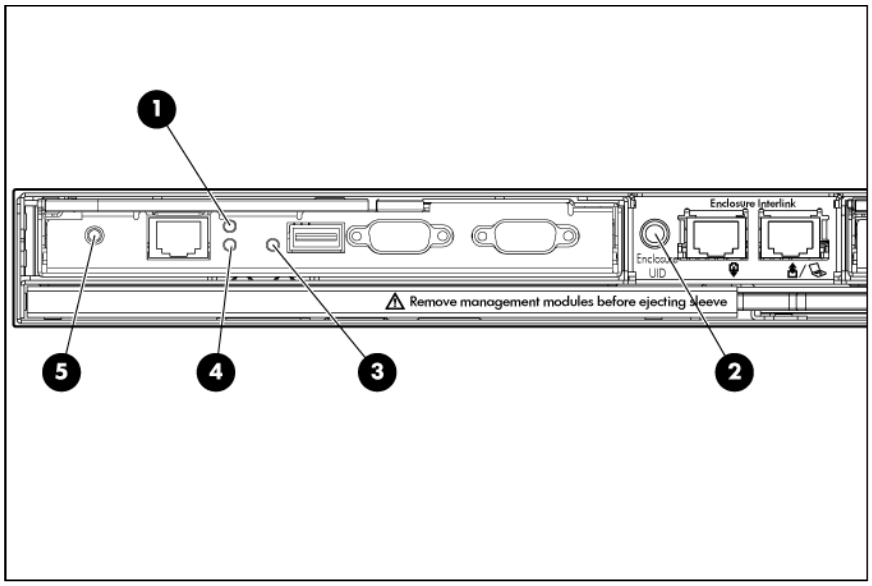

Item	Description
1	Onboard Administrator UID LED
2	Enclosure UID LED and UID button
3	Onboard Administrator health LED

Item	Description
4	Onboard Administrator active LED
5	Onboard Administrator reset button

Fan bay numbering

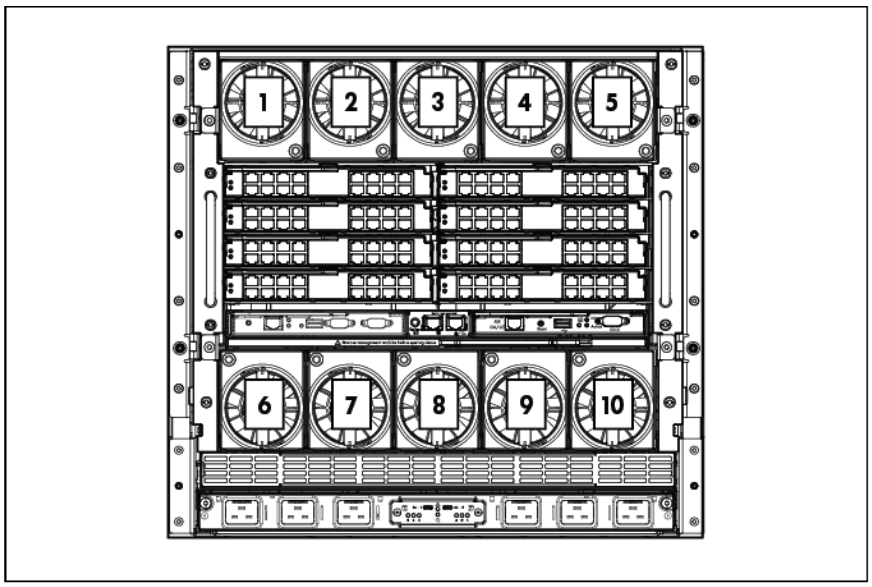

Fan LED

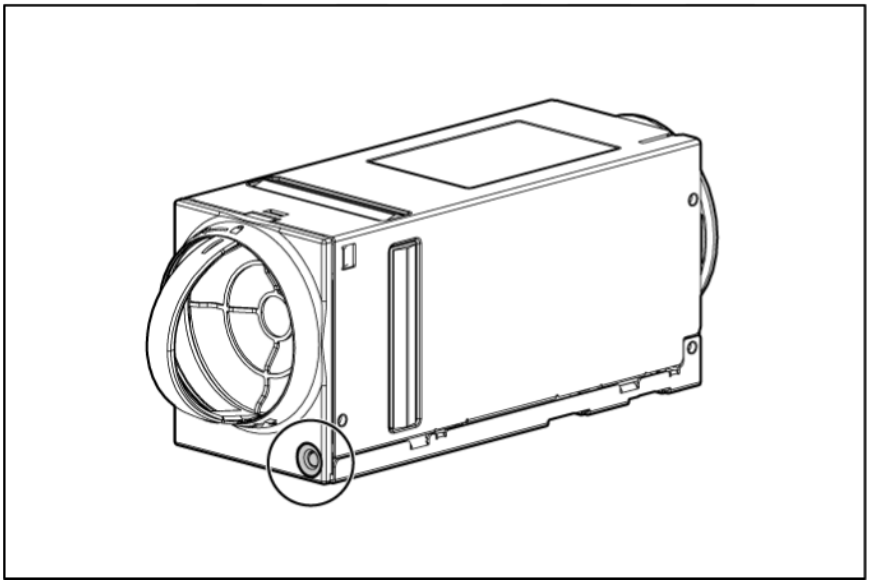

LED color	Fan status
Solid green	The fan is working.
Solid amber	The fan has failed.
Flashing amber	See the Insight Display screen.

Specifications

Environmental specifications

Specification	Value
Temperature range*	
Operating	10°C to 35°C (50°F to 95°F)
Non-operating	-30°C to 60°C (-22°F to 140°F)
Wet bulb temperature	
Operating	28ºC (82.4ºF)
Non-operating	38.7ºC (101.7ºF)
Relative humidity (noncondensing)**	
Operating	20% to 80%
Non-operating	5% to 95%

* All temperature ratings shown are for sea level. An altitude derating of 1°C per 304.8 m (1.8°F per 1000 ft) to 3048 m (10,000 ft) is applicable. No direct sunlight allowed. Upper operating limit is 3,048 m (10,000 ft) or 70 Kpa/10.1 psia. Upper non-operating limit is 9,144 m (30,000 ft) or 30.3 KPa/4.4 psia.
** Storage maximum humidity of 95% is based on a maximum temperature of 45°C (113°F). Altitude maximum for storage corresponds to a pressure minimum of 70 KPa.

Enclosure specifications

Specification	Value
Product dimensions	
Height	442.0 mm (17.4 in)
Depth	813.0 mm (32.0 in)
Width	447.0 mm (17.6 in)
Shipping dimensions	
Height	759.00 mm (29.88 in)
Depth	1013.00 mm (39.88 in)
Width	607.00 mm (23.88 in)
Single-phase enclosure weight*	
Unboxed	54.9 kg (121.0 lb)
Shipping	74.4 kg (164.0 lb)
Three-phase enclosure weight*	
Unboxed	68.0 kg (150.0 lb)
Shipping	87.5 kg (193.0 lb)
Maximum enclosure weight	

Specification	Value
Unboxed	204.0 kg (450.0 lb)
Shipping	223.6 kg (493.0 lb)

* No components installed.

Power specifications

DC power

Specification	Value
Output	2250 W per power supply
Input requirements	
Rated input voltage	-36 VDC to -72 VDC
Rated input current per power supply (maximum)	75 A
Rated input power per power supply (maximum)	2700 W

Single-phase power

Specification	HPE BladeSystem c7000 Power Supply	HPE 2400W High Efficiency Power Supply	HPE BL7000 2400W Platinum Power Supply
Power cord	IEC-320 C19-C20 1.22 m (4 ft)	IEC-320 C19-C20 1.22 m (4 ft)	IEC-320 C19-C20 1.22 m (4 ft)
Output	2250 W per power supply	2450 W per power supply	2450 W per power supply
Input requirements			
Rated input voltage	100 VAC to 124 VAC 200 VAC to 240 VAC	200 VAC to 240 VAC	200 VAC to 240 VAC
Rated input frequency	50 Hz to 60 Hz	50 Hz to 60 Hz	50 Hz to 60 Hz
Rated input current per power supply (maximum)	11.7 A at 100 VAC 10.6 A at 110 VAC 10.1 A at 115 VAC 9.7 A at 120 VAC 13.1 A at 200 VAC 12.6 A at 208 VAC 11.9 A at 220 VAC	13.85 A at 200 VAC 13.4 A at 208 VAC 12.6 A at 220 VAC	13.2 A at 200 VAC 12.7 A at 208 VAC 12 A at 220 VAC
Rated input power per power supply (maximum)	1166 VA at 100 VAC to 120 VAC 2612 VA at 200 VAC to 240 VAC	2770 VA at 200 VAC to 240 VAC	2615 VA at 200 VAC to 240 VAC

Three-phase power (North America/Japan)

Specification	HPE BladeSystem c7000 Power Supply	HPE 2400W High Efficiency Power Supply	HPE BL7000 2400W Platinum Power Supply
Power cords (2)	NEMA L15-30p 2.44 m (10 ft)	NEMA L15-30p 2.44 m (10 ft)	NEMA L15-30p 2.44 m (10 ft)
Output	2250 W per phase	2450 W per phase	2450 W per phase
Input requirements			

Specification	HPE BladeSystem c7000 Power Supply	HPE 2400W High Efficiency Power Supply	HPE BL7000 2400W Platinum Power Supply
Rated input voltage	200 VAC to 208 VAC line to line 115 V to 120 V line to neutral 3-phase delta	200 VAC to 208 VAC line to line 115 V to 120 V line to neutral 3-phase delta	200 VAC to 208 VAC line to line 115 V to 120 V line to neutral 3-phase delta
Rated input frequency	50 Hz to 60 Hz	50 Hz to 60 Hz	50 Hz to 60 Hz
Maximum input current per line cord	22.6 A at 200 VAC 21.8 A at 208 VAC 20.6 A at 220 VAC	24 A at 200 VAC 23.2 A at 208 VAC 21.8 A at 220 VAC	22.9 A at 200 VAC 22 A at 208 VAC 20.8 A at 220 VAC
Maximum input power per line cord	7836 VA	8310 VA	7845 VA

Three-phase power (International)

Specification	HPE BladeSystem c7000 Power Supply	HPE 2400W High Efficiency Power Supply	HPE BL7000 2400W Platinum Power Supply
Power cords (2)	IEC-309 200/346-V to 240/415-V, 5-pin, 16-A 2.44 m (10 ft)	IEC-309 200/346-V to 240/415-V, 5-pin, 16-A 2.44 m (10 ft)	IEC-309 200/346-V to 240/415-V, 5-pin, 16-A 2.44 m (10 ft)
Output	2250 W	2450 W	2450 W
Input requirements			
Rated input voltage	346 VAC to 415 VAC line-to-line* 200 VAC to 240 VAC line-to-neutral 3-phase WYE	346 VAC to 415 VAC line-to-line* 200 VAC to 240 VAC line-to-neutral 3-phase WYE	346 VAC to 415 VAC line-to-line* 200 VAC to 240 VAC line-to-neutral 3-phase WYE
Rated input frequency	50 Hz to 60 Hz	50 Hz to 60 Hz	50 Hz to 60 Hz
Maximum input current per line cord	13.1 A at 200 VAC 11.9 A at 220 VAC 10.9 A at 240 VAC	13.85 A at 200 VAC 12.6 A at 220 VAC 11.5 A at 240 VAC	13.2 A at 200 VAC 12 A at 220 VAC 11 A at 240 VAC
Maximum input power per line cord	7836 VA	8310 VA	7845 VA

*Rated 200 VAC to 240 VAC line-to-neutral. The enclosure will not operate from higher line-to-line voltage with the WYE wall plug configuration. Input AC modules are configured to provide 200 VAC to 240 VAC to the power supplies in this system.

Acronyms and abbreviations

ADU

Array Diagnostics Utility

CSR

Customer Self Repair

ESD

electrostatic discharge

HVDC

High Voltage DC

iLO

Integrated Lights-Out

IML

Integrated Management Log

OA

Onboard Administrator

SFP

small form-factor pluggable

SIM

Systems Insight Manager

Documentation feedback

Hewlett Packard Enterprise is committed to providing documentation that meets your needs. To help us improve the documentation, send any errors, suggestions, or comments to Documentation Feedback (mailto:docsfeedback@hpe.com). When submitting your feedback, include the document title, part number, edition, and publication date located on the front cover of the document. For online help content, include the product name, product version, help edition, and publication date located on the legal notices page.

Index

A

AC input module 43
AC power configuration, single-phase 56
AC power configuration, three-phase 56
AC power configurations 56
ADU (Array Diagnostic Utility) 61
Array Diagnostic Utility (ADU) 61

B

bay numbering, interconnect 67
bay numbering, power supply 64
buttons 62

C

cable configuration 57
cable, routing 51
cables 56
cabling 51, 56, 57
cabling, Onboard Administrator module 57
cabling, service port 57
cautions 26
components 15, 21, 26, 62
components, front panel 62
components, identification 15, 62
components, Onboard Administrator 68
components, rear panel 21
components, system 18
connectors 62
controller module 43
CSR (customer self repair) 5
customer self repair (CSR) 5

D

DC power specifications 72
DC power supply 57
device bay blank 30, 31
device bay numbering 63
device bay shelf 31
diagnostic tools 60
diagnostics utility 60
documentation 75

E

electrostatic discharge 26
enclosure LEDs 62
enclosure specifications 71
enclosure, configuring 65
environmental specifications 71

F

fan bay numbering 70
fan blank 37
fan location 37
features 62
front components 62

H

half-height blade shelf 31
HPE BladeSystem Insight Display 35, 65
HPE BladeSystem Insight Display screen 62
HPE Insight Diagnostics 60
HPE Insight Diagnostics survey functionality 61

I

illustrated parts catalog 15
IML (Integrated Management Log) 61
Insight Diagnostics 60, 61
Insight Display 65
installation, Insight Display 66
Integrated Management Log (IML) 61
interconnect bay dividers, removing 40
interconnect bay numbering 67
interconnect blank 38
interconnect module 39

K

KVM cabling 58

L

LCD 51
LEDs, unit identification (UID) 65, 69
location discovery services board 50

M

management module 43
management tools 60
mechanical components 15
midplane assembly 51

O

Onboard Administrator 60
Onboard Administrator blank 41
Onboard Administrator components 68

Onboard Administrator module, cabling 57, 58
overview, HPE BladeSystem Insight Display 65

P

part numbers 15, 18
pass-thru module 39
power specifications 72
power supply 29
power supply blank 29
power supply enclosure bay numbering 62
powering down 28, 29
preparation procedures 28

R

rear components 21, 66
removal and replacement procedures 26
required tools 26
routing cables 51

S

safety considerations 26
safety information 26
server blade, removing 33
single-phase AC configuration 56
spare part numbers 15
specifications 71
specifications, power 72, 73
static electricity 26
system components 18

T

three-phase AC configuration 56
troubleshooting resources 56, 60, 62, 71

U

UID LED 65, 69
utilities 60

W

warranty 5