HPE BladeSystem c7000 Enclosures - Product Information Reference

Part Number:
Published:
Edition:

HPE BladeSystem c7000 Enclosures - Product Information Reference

Abstract

Part Number:
Published:
Edition:

© Copyright –

Notices

The information contained herein is subject to change without notice. The only warranties for Hewlett Packard Enterprise products and services are set forth in the express warranty statements accompanying such products and services. Nothing herein should be construed as constituting an additional warranty. Hewlett Packard Enterprise shall not be liable for technical or editorial errors or omissions contained herein.

Confidential computer software. Valid license from Hewlett Packard Enterprise required for possession, use, or copying. Consistent with FAR 12.211 and 12.212, Commercial Computer Software, Computer Software Documentation, and Technical Data for Commercial Items are licensed to the U.S. Government under vendor's standard commercial license.

Links to third-party websites take you outside the Hewlett Packard Enterprise website. Hewlett Packard Enterprise has no control over and is not responsible for information outside the Hewlett Packard Enterprise website.

Acknowledgments

Intel®, Itanium®, Optane™, Pentium®, Xeon®, Intel Inside®, and the Intel Inside logo are trademarks of Intel Corporation in the U.S. and other countries.

AMD and the AMD EPYC™ and combinations thereof are trademarks of Advanced Micro Devices, Inc.

Microsoft® and Windows® are either registered trademarks or trademarks of Microsoft Corporation in the United States and/or other countries.

Adobe® and Acrobat® are trademarks of Adobe Systems Incorporated.

Java® and Oracle® are registered trademarks of Oracle and/or its affiliates.

UNIX® is a registered trademark of The Open Group.

All third-party marks are property of their respective owners.

Revision history

Part number	Publication date	Edition	Summary of changes

Table of contents

Overview

- Summary 6
  - Product description 6
- Standard Models 6
  - New RoHS compliant part numbers 7
  - Standard models 7
- Product features 8

Specifications

- Specifications 12
  - Physical specifications 13
  - Environmental specifications 14
  - Power specifications 15

Compatibility/Supportability

- Spare Parts 20
  - New model specific parts lists 21
  - Mechanical components 21
  - System components 23
  - Rear system components 24
- Option Parts 28
  - New model specific parts lists 29
  - HPE enclosure options 29
  - HPE power supplies 30
  - HPE cooling options 30
  - HPE blade system c-Class network interconnects 31
  - HPE bladesystem c-Class SAN interconnects 32
  - HPE SAS switch 33
  - HPE bladesystem infiniBand interconnects 33
  - HPE OneView software 34
  - HPE insight software 34
  - HPE iLO advanced for bladesystem license 35
  - HPE virtual connect enterprise manager 35
  - HPE c-Class storage blades 35
  - HPE expansion blades 36
  - HPE ultrium tape blades 36

HPE power cords....36
HPE Uninterruptible Power Systems (UPSs)....38
HPE Power Distribution Units (PDUs)....39
HPE data center racks....42
HPE tape backup....43
HPE Rack options....44
HPE care pack services....45
OS Compatibility....46
Useful Links....47

Summary

Subtopics

Product description

Product description



A BladeSystem c7000 Enclosure holds up to 16 server blades and up to 8 compute, storage or work station blades plus redundant network and storage interconnects. It includes a shared, multi-terabit h igh-speed midplane for wire-once connectivity of server blades to network and shared storage. Powe r is delivered through a pooled power backplane that ensures the full capacity of the redundant hot-p lug power supplies is available to all system components.

Standard Models

Subtopics

New RoHS compliant part numbers

Standard models

New RoHS compliant part numbers

To find the latest RoHS compliance information, please **click here to view the HPE PartSurfer web page** and then click on one of the linked model numbers. When locating RoHS information in PartSurfer, user can use the Option part number for the components, the sales order number for a system that the component is used in, or the Spare part number for a specific part. User can find the sales order numbers and Option part numbers in the Product QuickSpecs.

Standard models

Description	Model Number
HPE BLc7000 Configure-to-Order (CTO) Platinum enclosure with ROHS trial insight control license	681844-B21 **Click here to obtain parts list for this model**.
HPE Integrity BLc7000 CTO enclosure	AD361D **Click here to obtain parts list for this model**.
HPE BLc7000 TAA-compliant CTO platinum enclosure with 2x onboard admin 6x PS 10x fans	681844-B22 **Click here to obtain parts list for this model**.
HP BLc7000 Platinum enclosure with 1 phase 6 power supplies 10 fans ROHS 16 insight control licenses	681842-B21 **Click here to obtain parts list for this model**.
HP BLc7000 Platinum enclosure with 1 phase 2 power supplies 4 fans ROHS trial insight control license	681840-B21 **Click here to obtain parts list for this model**.
HP BLc7000 Platinum enclosure with 1 phase 6 power supplies 10 fans ROHS 16 OneView licenses	763850-B21 **Click here to obtain parts list for this model**.

NOTE:

All c7000 BTO enclosures will ship with 15 server blanks. CTO enclosures will ship with the required number of server blanks.

Description	Model Number
c7000 Platinum enclosure (PNs 681840-B21 and 681842-B21) comes standard with increased mid-plane bandwidth, intelligent infrastructure (2400 W Platinum hot plug power supply's, Iintelligent power module for power discovery services, and location discovery services), and a BladeSystem onboard administrator with KVM. c7000 enclosure (PNs 5070xx-B21) come as standard with the HPE 2400 W gold power supply and BladeSystem onboard administrator with KVM. HP 2650 W Platinum power supplies are optional via CTO.	

Product features

Feature	Description
Functions	• Up to 16 Half-Height server blades, 8 Full-Height server blades, and/or 8 expansion blades per enclosure (Not exceeding 16 total blades). • Up to 4 redundant interconnect I/O fabrics (Ethernet, Fibre Channel, InfiniBand, iSCSI, SAS, etc.) supported simultaneously within the enclosure. • Choice of Single-Phase High-Line AC, Three-Phase High-Line AC, Single-Phase high voltage AC, -48 V dc, or high voltage DC power options for flexibility in connecting to datacenter power. • HP Thermal Logic technology to minimize power consumption and reduce cooling. • A minimum of four Hot-Plug HP active cool 200 fans. For additional capacity, redundancy, and improved power consumption and acoustics, Active Cool 200 Fan kits can be added for a maximum of 10 fans. • Redundant hot-plug cooling, redundant Hot-Plug power supplies, redundant connections, redundant interconnect modules, and optional redund

Feature	Description
	ant BladeSystem onboard administrator manage ment module.
Benefits	• With local and remote hardware management in tegrated across the solution, one full enclosure can be managed as easily as one server. • Management and network interconnects extend scalability beyond a single enclosure, allowing resources to be pooled and shared across multipl e enclosures. • Accommodates multiple server and network desi gns in one enclosure. • Lower power consumption, in comparison to Rac k-Mounted servers. • Lower costs per server, in comparison to Rack-M ounted servers. • Lower airflow requirements, in comparison to Ra ck-Mounted servers. • Reduced and simplified cabling in comparison to Rack-Mounted servers. • Investment protection supporting G1 through Gen9 server blades.
Blade system onboard administrator managemen t	• Robust, multiple enclosure setup and control. • Reports asset and inventory information for the devices in the enclosure. • Reports thermal and power information, includi ng real-time actual power usage per server and perenclosure. • Front-mounted Insight Display for easy manage ment within the datacenter. • Integrated access to all server blade Integrated L ights-Out (iLO) from a single cable.

Feature	Description
	• Provides integrated access to interconnect bay device management ports from the single Blade System onboard administrator cable. • Single Sign-On capability for all devices in the en closure. • Role-Based security locally and/or with LDAP di rectory services. • Provides a wizard-based initial setup process for easy configuration.
HPE blade systemc-Class c3000 Enclosure	For users that need a smaller blade system, the HPE BladeSystem c-Class c3000 Enclosure is the perfect solution. Supporting up to 8 blades and 4 inter conn ects, the c3000 enclosure provides an ideal solution for small and medium businesses and remote sites.
HPE ProLiant and integrity server blades	• Delivering Best-in-Class performance, choice an d reliability on Intel Xeon and Intel Itanium proc essors for Windows, Linux, Solaris, OpenVMS or HP-UX based servers; the HPE portfolio of serve r blades supports avariety of application require ments for scale-out architectures. • Hewlett Packard Enterprise offers one-, two-, fo ur- , or eight processor server blades, with the wi dest range of performance, and form factors.
HPE D2200sb storage blade	• The D2220sb Storage Blade delivers direct attac hed storage for c-Class Gen8 server blades with support for up to twelve hot plug Small Form Fa ctor (SFF) SAS or SATA Midline hard disk drives or SAS/SATA SSDs. • The enclosure backplane provides a PCI express connection to an adjacent c-Class server blade a nd enables high performance storage access wit hout any additional cables. • The D2220sb Storage Blade features an onboa rd Smart Array P420i controller with 2GB Flash -Backed Write Cache (FBWC) for increased perfo

Feature	Description
	rmance and data protection. Up to eight D2220s b storage devices can be supported in a single B ladeSystem c7000 Enclosure for up to 115.2TB of capacity.
HPE ultrium tape Blades1	• Tape blades are ideal for HP BladeSystem c-Clas s users who need a data protection solution but are not connected into a Storage Area Network (SAN). • They provide direct attach data protection for th e adjacent server and network backup protectio n for all other data within the enclosure. The HP tape blades are the industry's first bladed tape d rives and are developed exclusively for the Blade System c-Class enclosures.
Dynamic power capping	• HPE Dynamic power capping is the industry's fir st power capping solution that lets user reclaim t rapped power and cooling capacity without putt ing electrical infrastructure or server performanc e at risk. • The enclosure Dynamic power cap will be share d amongst all of the installed devices and indivi dual server caps will be changed to match the s erver load. This will optimize the performance o f the servers while ensuring that the enclosure stays below the cap value.
Rack airflow requirements	**Rack 10000 G2 series cabinets**The increasing powe r of new High-Performance processor technology re quires increased cooling efficiency for rack-mounted servers. The G2 10000 Series racks provide enhance d airflow for maximum cooling, allowing these racks to be fully loaded with servers using the latest proc essors.
Factory express portfolio for servers and storage	HPE Factory express offers configuration, customizat ion, integration and deployment services for HP ser vers and storage products. Users can choose how th

Feature	Description
	eir factory solutions are built, tested, integrated, shipped and deployed.
HPE simple configurator	• SCE is a guided Self-Service tool to help sales and non-technical people provide users with initial configurations in 3 to 5 minutes. Send the configuration on for configuration help, or use in the existing ordering processes. • If user require **custom** rack configuration or configuration for products notavailable in SCE, please contact HPE's user Business center or an authorized partner for assistance.
HPE power advisor	• The HPE power advisor is a tool provided by Hewlett-Packard Enterprise to assist in the estimation of power consumption and proper selection of components including power supplies at a system, rack, and multi-rack level. • A variety of additional features are also provided including a condensed bill of materials, a cost of ownership calculator, and a power report. The HPE Power advisor allows for the mixing of rack, tower, blade, and other products in a single environment.

Specifications

Subtopics

Physical specifications
Environmental specifications
Power specifications

Physical specifications

Specifications	Description	
Dimensions (H x W x D):	442 x 447.04 x 813 mm (17.4 x 17.5 x 32.0 in)	
Enclosure weight	• **Unboxed**: 67 kg (148 lb) • **Shipping**: 87 kg (191 lb)	
Power input module weight	1.4 kg (3 lb)	
Power supply weight	2.7 kg (6 lb)	
HPE Active cool 200 fan weight	1.8 kg (4 lb)	
Onboard administrator weight	1.4 kg (3 lb)	
Maximum enclosure weight	• **Unboxed**: 219 kg (482 lb) • **Shipping**: 238 kg (525 lb)	
Option kits	Power supply option shipping dimensions	223 x 219 x 892 mm (8.75 x 8.63 x 35.13 in)
	Weight	3.85 kg (8.5 lb)
	Fan option shipping dimensions	223 x 248 x 403 mm (8.75 x 9.75 x 15.88 in)
	Weight	1.8 kg (4.0 lb)
	BladeSystem onboard administrator option shipping dimensions	63.5 x 251 x 343 mm (2.50 x 9.88 x 13.50 in)
	Weight	1.8 kg (4.0 lb)

Environmental specifications

Specifications	Description
Operating temperature [1]	10° to 35° C (50° to 95° F)
Non-operating temperature	-30°C to 60°C (-22°F to 140°F)
Operating relative humidity [1]	10% to 90% non-condensing
Operating Non-operating humidity	5% to 95% non-condensing
Acoustic noise [2]	Listed are the declared A-Weighted sound power l evels (LWAd) and declared average by stander positi on A-Weighted sound pressure levels (LpAm) when t he product is oPerating in a 23°C ambient environm ent. Noise emissions were measured in accordance w ith ISO 7779 (ECMA 74) and declared in accordance with ISO 9296(ECMA 109)

Idle

LWAd	7.1 Bels
LpAm	54 dBA
Operating	
LWAd	7.2 Bels
LpAm	54 dBA

NOTE:

1. Operating temperature has an altitude derating of 1°C (1.8°F) per 304.8 m (1,000 ft). N o direct sunlight. Upper operating limit is 3,048 m (10,000 ft) or 70Kpa/10.1 psia. Upper n on-operating limit is 9,144 m (30,000 ft) or 30.3 Kpa/4.4 psia. Storage maximum humidity of 95% is based on a maximum temperature of 45°C (113°F). Altitude maximum for storage is 70 Kpa.

2. Listed are the declared A-Weighted sound power levels (LWAd) and declared average bystander position A-Weighted sound pressure levels (LpAm) when the product is operatin

Specifications	Description
	g in a 23°C (73.4°F) ambient environment. Noise emissions were measured in accordance w ith ISO 7779 (ECMA 74) and declared in accordance with ISO 9296 (ECMA 109).

Power specifications

Specifications	Description	
Single phase AC power input module		
Single phase AC intelligent power input module	Power connection [1]	6x IEC-320 C20 blue power connectors
	Rated input voltage	200 to 220 V ac
	Rated input frequency	50 to 60 Hz
	Number of power supplies supported	• Minimum: One (1) • Maximum: Six (6)
2250 W power supply	Maximum output (Per power supply): 2250 W	
	Maximum output (Total for six power supplies): 13,050 W	
	Maximum input current (Per power supply) • 13.1 A at 200 V ac • 12.6 A at 208 V ac • 11.9 A at 220 V ac Maximum input power (Per power supply): 2621 VA	
2400 W gold power supply	Maximum output (Per power supply): 2450 W	
	Maximum output (Total for six power supplies): 14,210 W	
	Maximum input current (Per power supply) • 13.9 A at 200 V ac • 13.3 A at 208 V ac	

Specifications	Description	
	• 12.6 A at 220 V ac	
	Maximum input power (Per power supply): 2780 VA	
2400 W platinum power supply	Maximum output (Per power supply): 2450 W	
	Maximum output (Total for six power supplies): 14,210 W	
	Maximum input current (Per power supply) • 13.2 A at 200 V ac • 12.7 A at 208 V ac • 12.2 A at 220 V ac	
	Maximum input power (Per power supply): 2640 VA	
2650 W platinum power supply	Maximum output (Per power supply): 2650 W	
	Maximum output (Total for six power supplies): 15,370 W	
	Maximum input current (Per power supply) • 14.4 A at 200 V ac • 13.8 A at 208 V ac • 13.1 A at 220 V ac • Maximum input power (Per power supply): 2880 VA	
Three phase AC NA/JPN power input module	Power connection	Two 3.05 m (10 ft) power cables with NEMA L15-30p connectors
	Rated input voltage	• 200 to 208 V ac line to line • 3-phase delta
	Rated input frequency	50 to 60 Hz
	Number of power supplies supported	• Minimum: Three (3) • Maximum: Six (6)
2250 W power supply	Maximum output (Per power supply): 2250 W	

Specifications	Description	
	Maximum output (Total for six power supplies): 13,050 W	
	Maximum input current Per line cord • 22.8 A at 200 V ac • 21.8 A at 208 V ac Maximum input power Per line cord: 7863 VA	
2400 W gold power supply	Maximum output (Per power supply): 2450 W	
	Maximum output (Total for six power supplies): 14,210W	
	Maximum input current Per line cord • 24.2 A at 200 V ac • 23. 2 A at 208 V ac	
	Maximum input power per line cord: 8352 VA	
2400 W platinum power supply	Maximum output (Per power supply): 2450 W	
	Maximum output (Total for six power supplies): 14,210 W	
	Maximum input current per line cord • 22.9 A at 200 V ac • 22 A at 208 V ac	
	Maximum input power per line cord: 7920 VA	
2650 W platinum power supply	Maximum output (Per power supply): 2650 W	
	Maximum output (Total for six power supplies): 15,370 W	
	Maximum input current per line cord • 25 A at 200 V ac • 24 A at 208 V ac Maximum input power per line cord: 8640 VA	
Three phase AC international power input module	**Power connection**	Two 3.05 m (10 ft) power cables with IEC-309 220/380 V - 240/415 V, 5-Pin, 6h, 16 A connectors

Specifications	Description	
	Rated input voltage	• 380 to 415 V ac line to line • 220 to 240 V ac line to neutral [2] • 3-Phase WYE
	Rated input frequency	50 to 60 Hz
	Number of power supplies s upported	• Minimum: Three (3) • Maximum: Six (6)
2250 W power supply	Maximum output (Per power supply): 2250 W	
	Maximum output (Total for six power supplies): 13,050 W	
	Maximum input current per line cord: • 11.9 A at 220/380 V ac • 10.9 A at 240/415 V ac Maximum input power per line cord: 7854 VA	
2400 W gold power su pply	Maximum output (Per power supply): 2450 W	
	Maximum output (Total for six power supplies): 14,210 W	
	Maximum input current per line cord: • 12.6 A at 220/380 V ac • 11.5 A at 240/415 V ac Maximum input power per line cord: 8316 VA	
2400 W platinum power supply	Maximum output (Per power supply): 2450 W	
	Maximum output (Total for six power supplies): 14,700 W	
	Maximum input current per line cord: • 12.2 A at 220/380 V ac • 11.2 A at 240/415 V ac Maximum input power per line cord: 8064 VA	

Specifications	Description	
2650 W platinum power supply	Maximum output (Per power supply): 2650 W	
	Maximum output (Total for six power supplies): 15,370 W	
	Maximum input current Per line cord: • 13.1 A at 220/380 V ac • 12 A at 240/415 V ac Maximum input power Per line cord: 8646 VA	
-48 V dc power input module	Power connection	• Terminal lug: 45DG 4AWG 1/4 2H • Two-hole lug • 45 degree bend • 6.4 mm (0.25 in) stud hole size • 16 mm (0.63 in) hole spacing
	Rated input voltage	40 to 60 V dc
	Number of power supplies supported	• Minimum: One (1) • Maximum: Six (6)
2250 W -48 V dc power supply	Maximum output (Per power supply): 2250 W	
	Maximum output (Total for six power supplies): 13,050 W	
	Maximum input current (Per power supply): 75 A	
2650 W -48 V dc power supply	Maximum input power Per supply: 2700 W	
	Maximum output (Per power supply): 2650 W	
	Maximum output (Total for six power supplies): 15,370 W	
	Maximum input current (Per power supply): 73A	
	Maximum input power per supply:2892 W	
High voltage power input module	**Power connection**	6x APP Saf-D-Grid receptacle connectors [3]
	Rated input voltage	277 V ac, 380 V dc

Specifications	Description	
	Rated input frequency	50 to 60 Hz (AC), N/A (DC)
	Number of power supplies supported	• Minimum: One (1) • Maximum: Six (6)
2650 W universal power supply	Maximum output (Per power supply): 2650 W	
	Maximum output (Total for six power supplies) 15,370 W	
	Maximum input current (Per power supply): • 10.5 A at 277 V ac • 7.6 A at 380 V dc	

NOTE:

1. The blue power connectors indicate HPE Power Discovery Services capability. HPE Power discovery services are enabled when used with an Intelligent Power Distribution Unit (iPDU), iPDU cables, and a platinum power supply kit. One WW 250 W C19-C20 2.0 m power cable is included per power supply. iPDU power cables are ordered separately.

2. Rated 220 to 240 V ac line-to-neutral. The enclosure will not operate from higher line-to-line voltage with the WYE wall plug configuration. This power input module is configured to provide 220 to 240 V ac to the power supplies.

3. Power cables with APP Saf-D-Grid connectors are ordered separately.

Spare Parts

Subtopics

New model specific parts lists
Mechanical components
System components
Rear system components

New model specific parts lists

IMPORTANT: To obtain current part number information for a specific product model, use the Standard Models page for this product family.

- The product Standard Models page now links the model SKU numbers to the spare parts list for each model found on the HPE PartSurfer web site. (To report missing or incorrect parts information in PartSurfer, please use the **Contact us** and **Missing or incorrect data** links within the PartSurfer web site utility).
- To look up RoHS-compliant information in PartSurfer, use the component's option part number or the sales order number for a system in which the component is used (Available in the QuickSpecs or Standard Models page).

Mechanical components

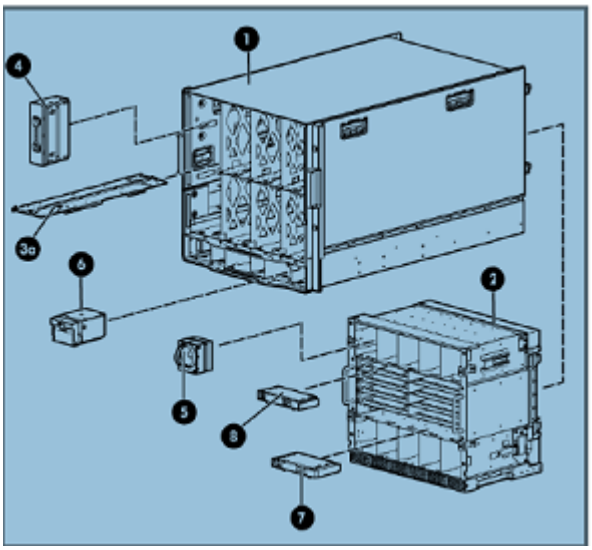

Item	Part Description	Spare Part Number	Customer Self Repair
1	**HPE BladeSystem c7000 Enclosure**	-	-
2	**Rear cage**	-	-
3c	**Hardware kit** Device bay shelf	432463-001	Mandatory [2]

Item	Part Description	Spare Part Number	Customer Self Repair
	Vertical cable cover [1]		
	Left LCD cap [1]		
4	**Device bay blank**	414051-001	Mandatory [2]
5	**Fan blank**	414052-001	Mandatory [2]
6	**Power supply blank**	416043-001	Mandatory [2]
7	**Onboard Administrator (OA) blank**	414054-001	Mandatory [2]
8	**Interconnect blank** (Included with th e HPE BladeSystem hardware kit)	414053-001	Mandatory [2]
9	**Plastics kit** [1]	414063-001	Mandatory [2]
	Left handle cover		
	Right handle cover		
	Screws for endcaps and handles, rear cage (10)		
	Rear cage endcap, top		
	Enclosure bezel ear, right		
	Enclosure bezel ear, left		
10	Enclosure right front bezel plastics [1, 3]	709864-001	Mandatory [2]
11	Enclosure left front bezel plastics [1,3]	709863-001	Mandatory [2]
12	Rackmounting kit [1]	432461-001	Mandatory [2]

NOTE:

1: Part is not shown in the above figure.

2: Mandatory - Parts for which user self repair is mandatory. If user request HPE to replace t hese parts, user will be charged for the travel and labor costs of this service.

3: Platinum models only.

System components

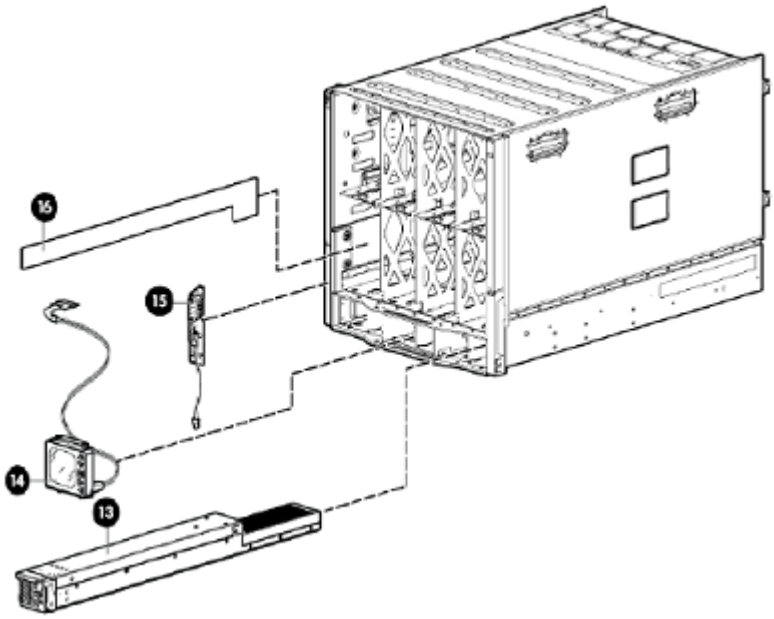

Item	Part Description	Spare Part Number	Customer Self Repair
13	**Power supply**		
	Hot-plug power supply - 2250 W - With IEC-C20 240 V connection (FIO)	411099-001	Mandatory [2]
	2400 W high efficiency hot-plug power supply - 12 V (Option 499243-B21)	500242-001	Mandatory [2]
	Power supply - 2450 W, 12 V-OUT, hot pluggable, high effyciency	588733-001	Mandatory [2]
	HPE c7000 Enclosure, 2250 W Hot-Plug -48 V dc power supply (Single PSU) (Option #: AH332A)	544660-001	Mandatory [2]
14	**HPE BladeSystem insight display**		
	HPE BladeSystem 3 in Insight display	441203-001	No [2]
	Module - LCD widescreen kit	519349-001	No [2]
	HPE BladeSystem 2 in Insight display [1]	415839-001	No [2]
15	Location discovery services board	709865-001	Mandatory [2]

Item	Part Description	Spare Part Number	Customer Self Repair
16	**Insight display Pass-Through board**		
	Insight display Pass-Through board	432462-001	No [2]
	Insight display LCD Pass-Through board (RoHS) [1]	519348-001	No [2]
	Insight display Pass-Through board	709866-001	No [2]

Rear system components

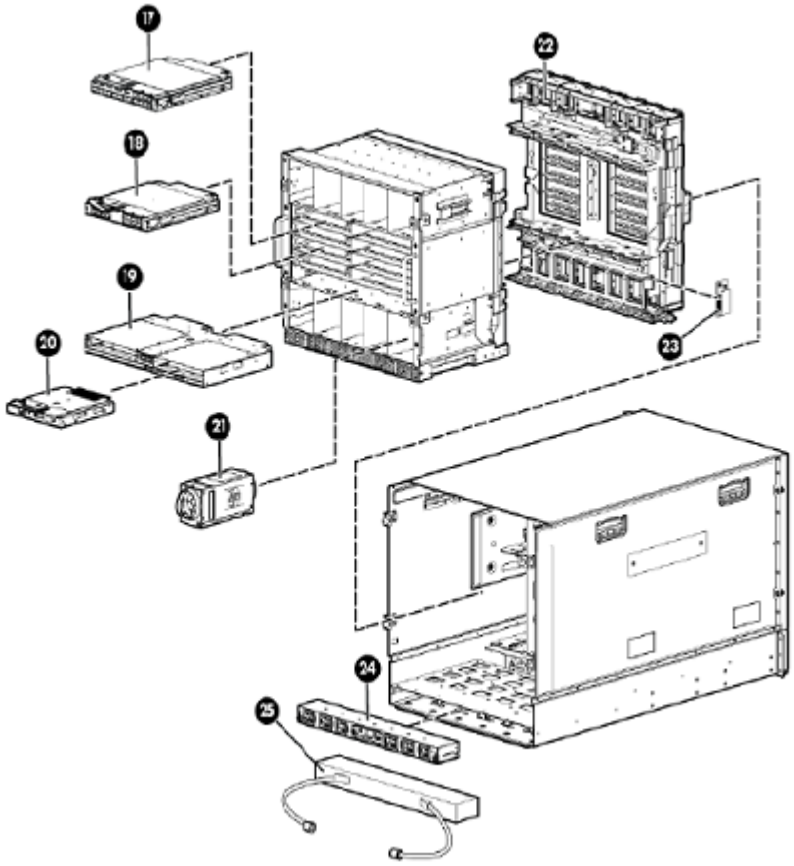

Item	Part Description	Spare Part Number	Customer Self Repair
17	**Interconnect module**		

Item	Part Description	Spare Part Number	Customer Self Repair
	HPE GbE2c Ethernet Blade switch for HPE BladeSystem c-Class	414037-001	Mandatory [2]
	HPE GbE2c Layer 2/3 Ethernet Blade switch for BladeSystem c-Class [1]	438475-001	Mandatory [2]
	HPE 10Gb Ethernet BladeSystem c-Class Switch [1]	447116-001	Mandatory [2]
	HPE 1:10Gb Ethernet BladeSystem c-Class switch [1]	438476-001	Mandatory [2]
	Brocade 4Gb 12-port SAN switch for HPE BladeSystem c-Class [1]	411120-001	Mandatory [2]
	Brocade 4Gb 12-port SAN switch for HPE BladeSystem c-Class [1]	411121-001	Mandatory [2]
	Brocade 4Gb 24-port SAN switch for HPE BladeSystem c-Class with power pack software [1]	411122-001	Mandatory [2]
	Cisco catalyst Blade switch 3020 for HPE BladeSystem c-Class [1]	432904-001	Mandatory [2]
	HPE 1/10Gb virtual connect Ethernet module for BladeSystem c-Class [1]	399725-001	Mandatory [2]
	HPE 4Gb virtual connect fibre channel module for BladeSystem c-Class [1]	410152-001	Mandatory [2]
	HPE 4X DDR IB switch module for HPE BladeSystem c-Class [1]	410408-001	Mandatory [2]
	HPE BladeSystem c-Class 1/10GB-F VC Ethernet module [1]	447103-001	Mandatory [2]
	Cisco MDS 9124e 12-port fabric switch [1]	444572-001	Mandatory [2]
	Cisco MDS9124e 24-port fabric switch [1]	444573-001	Mandatory [2]
	Brocade 8GB 12-port SAN switch [1]	489864-001	Mandatory [2]
	Brocade 8GB 24-port SAN switch [1]	489865-001	Mandatory [2]

Item	Part Description	Spare Part Number	Customer Self Repair
	Brocade 8GB 16-port SAN switch with power pack and licensed features [1]	489866-001	Mandatory [2]
	HPE BladeSystem c-Class Cisco 1/10 GbE 3120X switch [1]	451357-001	Mandatory [2]
	HPE BladeSystem c-Class Cisco 1 GbE 3120G switch [1]	451356-001	Mandatory [2]
	ProCurve 6120G/BX, Blade switch [1]	508090-001	Mandatory [2]
	HPE ProCurve 6120XG Blade switch [1]	517994-001	Mandatory [2]
	BladeSystem c-Class VC8Gb 20-port fibre channel module [1]	572216-001	Mandatory [2]
	HPE BLc VC Flex-10/10D module	639852-001	Mandatory [2]
	HPE Virtual connect FlexFabric10Gb/24-port module for c-ClassBlade system	572213-001	Mandatory [2]
	HPE 6125G Ethernet Blade switch	663656-001	Mandatory [2]
	HPE 6125G/XG Ethernet Blade switch	663658-001	Mandatory [2]
18	**Interconnect module (Pass-Through)**		
	1Gb Ethernet Pass-Through module forBladeSystem c-Class	419329-001	Mandatory [2]
	4Gb Fibre channel Pass-ThroughModule for BladeSystem c-Class [1]	416378-001	Mandatory [2]
	HPE 10 GbE Pass-Through Module [1]	504624-001	Mandatory [2]
19	**OA tray**		
	OA Tray	416000-001	Mandatory [2]
	OA Tray (RoHS) [1]	519346-001	Mandatory [2]
20	**OA**		
	HPE BladeSystem OA	414055-001	Mandatory [2]
	MODULE OA DDR2	503826-001	Mandatory [1]
	HPE c7000 OA with KVM	708046-001	Mandatory [2]

Item	Part Description	Spare Part Number	Customer Self Repair
21	**Active Cool 200 Fan**	413996-001	Mandatory [2]
22	**Midplane assembly** [4]		
	Midplane assembly	414050-001	No [3]
	Midplane assembly (RoHS) [1]	519345-001	No [3]
	AMP midplane assembly (Fan power board) - Includes rear cage, for enclosu re SKUs that start with 6xxxxx-xxx or 7 xxxxx-xxx [1]	689229-001	No [3]
23	**Insight display connector board**		
	Insight display connector board	416001-001	No [3]
	Insight display LCD connector board (RoHS) [1]	519347-001	No [3]
24	**AC module**		
	Single-phase AC input power module (FIO) - 200 - 240 V ac, 50-60 Hz - Has a C19-C20 cord, and six IEC C20 inlets [1]	413494-001	Mandatory [2]
	AC module, single-phase, intelligent	666226-001	Mandatory [2]
	AC input module, single phase, HVDC	754219-001	Mandatory [2]
25	**Three-phase AC Input Module** (North America and Japan)	413495-001	Mandatory [2]
26	**Three-phase AC input module, intern ational** [1]	413496-001	Mandatory [2]
27	**DC Input Module** [1]	544661-001	Mandatory [2]
28	**HPE c-Class Blade SUV Cable** [1]	416003-001	Mandatory [2]
29	**USB cable for the single-phase intelli gentpower input module**	711595-001	Mandatory [2]

NOTE:

1: Part is not shown in the above figure.

Item	Part Description	Spare Part Number	Customer Self Repair

2. Mandatory - Parts for which user self repair is mandatory. If user request HPE to replace t hese parts, user will be charged for the travel and labor costs of this service.

3. No - Some HPE parts are not designed for user self repair. In order to satisfy the user war ranty, HPE requires that an authorized service provider replace the part. These parts are ide ntified as **No** in the illustrated parts catalog.

4: HPE Proliant BladeSystem C7000 enclosure uses a new midplane assembly that has a dif ferent spare part number.

.

Option Parts

Subtopics

New model specific parts lists
HPE enclosure options
HPE power supplies
HPE cooling options
HPE blade system c-Class network interconnects
HPE bladesystem c-Class SAN interconnects
HPE SAS switch
HPE bladesystem infiniBand interconnects
HPE OneView software
HPE insight software
HPE iLO advanced for bladesystem license
HPE virtual connect enterprise manager
HPE c-Class storage blades
HPE expansion blades
HPE ultrium tape blades
HPE power cords
HPE Uninterruptible Power Systems (UPSs)
HPE Power Distribution Units (PDUs)
HPE data center racks
HPE tape backup
HPE Rack options
HPE care pack services

New model specific parts lists

IMPORTANT: To obtain current part number information for a specific product model, use the Standard Models page for this product family.

- The product Standard Models page now links the model SKU numbers to the spare parts list for each model found on the HPE PartSurfer web site. (To report missing or incorrect parts information in PartSurfer, please use the "Contact us" and "Missing or incorrect data" links within the PartSurfer web site utility).
- To look up RoHS-compliant information in PartSurfer, use the component's option part number or the sales order number for a system in which the component is used (Available in the QuickSpecs or Standard Models page).

HPE enclosure options

Description	Option Part Number
HPE BLc7000 sngle phase FIO intelligent power m odule	677595-B21
HPE BLc7000 1 PH FIO power module option	413379-B21
HPE BLc7000 3 PH internal FIO power module optio n	413381-B21
HP BLc7000 3 PH NA/JP FIO power module option	413380-B21
HPE BLc7000 -48 V dc power input module	AH331A
HPE HVDC 1PH AC power module BLc FIO option	753623-B21
HPE BLc7000 onboard administrator with KVM opti on	456204-B21
HPE BLc7000 10000 series rack shipping bracket o ption	433718-B21
HPE c-Class Bladesystem miscellaneous blanks optio n kit	412148-B21
HPE c-Class Blade system bay blank with coupler o ption	412150-B21

HPE power supplies

Description	Option Part Number
HPE 2650 W performance platinum hot plug power supply kit	733459-B21
HPE 6X 2650 W platinum hot plug power supply kit	733460-B21
HP 2400 W platinum hot plug power supply kit	588603-B21
HPE BLC7000 special/promotional enclosure	517521-B22
HP 2400 W gold hot plug power supply kit	499243-B21
HPE BLC7000 special/promotional enclosure	517521-B21
HP 2250 W 48 V dc hot plug power supply kit	AH332A
HPE 2650 W performance universal hot plug power supply kit	753618-B21
HPE 6X 2650 W performance universal hot plug po wer supply kit	753619-B21
HPE 2650 W performance 48 V dc platinum hot plu g power supply kit	789934-B21
HP 6X 2650 W 48 V dc hot plug factory integrated power supply kit	789935-B21

HPE cooling options

Description	Option Part Number
HPE BLc7000 enclosure HPE aingle active cool fan Ooption kit	412140-B21

HPE blade system c-Class network interconnects

Description	Option Part Number
HPE virtual connect flexfabric-20/40 F8 module for c-Class blade system	691367-B21
HPE virtual connect flexfabric-20/40 F8 Module for c-Class blade system with TAA	691367-B22
HPE virtual vonnect flex-10/10D module enterprise edition for BLc7000 option	662048-B21
HPE virtual connect flex-10/10D module for c-Class bladesystem	638526-B21
HPE virtual connect flexfabric 10/24 enterprise editi on BLc7000 option	605865-B21
HPE virtual connect flexfabric 10Gb/24-port module for c-Class bladesystem	571956-B21
HPE 6125G Ethernet blade switch	658247-B21
HPE 6125G/XG Ethernet blade switch	658250-B21
HPE Virtual Connect 16Gb 24-port Fibre Channel M odule for c-Class BladeSystem	P08475-B21
HPE Virtual Connect 16Gb 24-port Fibre Channel TAA Module for c-Class BladeSystem	P08476-B21
HP 6120XG blade switch	516733-B21
HP 1 GbE Pass-Through module for c-Class blad esystem	406740-B21
HPE 10 GbE Ethernet Pass-Through TAA-compliant Module II for c-Class BladeSystem	854194-B22
HPE 10 GbE Ethernet Pass-Through module for c-Cl ass bladesystem	538113-B21
Mellanox SX1018HP Ethernet switch for c-Class Bla deSystem	689638-B21
HPE Cisco B22HP fabric extender for BladeSystem c -Class	641146-B21

Description	Option Part Number
HPE Cisco B22HP fabric extender with 16 FET for bladesystem c-Class	657787-B21
HPE 10GBase-T SFP+ transceiver	813874-B21

HPE bladesystem c-Class SAN interconnects

Description	Option Part Number
HPE virtual connect 16Gb 24-port fibre channel module for c-Class bladesystem	751465-B21
HPE virtual connect 16Gb 24-port fibre channel TAA Module for c-Class bladesystem	778720-B2
HPE virtual connect 8Gb 24-port fibre channel module for c-Class bladesystem	466482-B21
HP virtual connect 8Gb 20-port fibre channel module for c-Class bladesystem	572018-B21
HPE 4GB fibre channel Pass-Through module for c-Class bladesystem	403626-B21
Brocade 8/12c SAN switch for blade system c-Class	AJ820C
Brocade 8/24c SAN switch for blade system c-Class	AJ821C
Brocade 8/24c power pack+ SAN switch for bladesystem c-Class	AJ822C
Cisco MDS 8/12c fabric switch for HP bladesystem c-Class	AW563A
Cisco MDS 8/24c fabric switch for HP bladesystem c-Class	AW564A
Cisco MDS 9124e switch for bladesystem c-Class 12-port Upgrade LTU	T5169A
Brocade 16Gb/28 SAN switch for bladesystem c-Class	C8S46A

Description	Option Part Number
Brocade 16Gb/28 SAN Switch for BladeSystem c-Class	C8S46B
Brocade 16Gb/16 SAN switch for bladesystem c-Class	C8S45A
Brocade 16Gb/28 SAN switch power pack+ for bladesystem c-Class	C8S47A
Brocade 16Gb/28 SAN Switch power pack+ for BladeSystem c-Class	C8S47B
Brocade 8/16Gb embedded FC switch 12-port upgrade LTU	T5517A
HP MDS 8/12c fabric switch 12-port upgrade LTU	TA804A
HP StoreFabric data center network manager bladesystem LTU	TC367A

HPE SAS switch

Description	Option Part Number
HPE 6Gb SAS switch single pack for HPE bladesystem c-Class	BK763A
HPE 6Gb SAS switch dual pack for HPE bladesystem c-Class	BK764A

HPE bladesystem infiniBand interconnects

Description	Option Part Number
QLogic infiniBand 4X QDR management module for c-Class bladesystem	505959-B21

Description	Option Part Number
HP 4X FDR infiniBand managed switch module for c -Class bladesystem	648311-B21
HPE 4X FDR infiniBand switch module for c-Class bl adesystem	648312-B21

HPE OneView software

Description	Option Part Number
HPE OneView physical media kit LTU	E5Y37A
HPE OneView including 3 internal 24x7 support encl osure FIO bundle 16-server LTU	E5Y41A
HPE OneView including 3 internal 24x7 support encl osure bundle track 16-server LTU	E5Y42A

HPE insight software

Description	Option Part Number
HP insight control for bladesystem including 1 intern al 24x7 support enclosure 8 server FIO electronic lic ense	C6N32ABE
HP insight control for bladesystem including 1 intern al 24x7 support enclosure 16 server FIO electronic li cense	C6N33ABE
HP insight control server provisioning media kit	BD883A
HP insight management media kit	C6N31A

HPE iLO advanced for bladesystem license

Description	Option Part Number
HPE iLO advanced for BladeSystem 8-server license with 1internal support on iLO licensed features	512489-B21

HPE virtual connect enterprise manager

Description	Option Part Number
HPE Virtual connect enterprise manager including 1 internal 24x7 support single c7000 enclosure LTU	459864-B21
HPE BladeSystem c-Class 4x10G QSFP+ MPO SR4 1 00 m transceiver	805755-B21

HPE c-Class storage blades

Description	Option Part Number
HPE D2220sb build-to-order storage blade	QW917A
HPE D2220sb configure-to-order storage blade	QW918A
HP BL c-Class PCI express mezzanine pass through option kit	431643-B21
HPE D2500sb configure-to-order storage blade	868909-B21

HPE expansion blades

Description	Option Part Number
HPE BLc PCI expansion blade	448018-B21
HP BL c-Class PCI express mezzanine pass through option kit	431643-B21

HPE ultrium tape blades

Description	Option Part Number
HP StoreEver LTO-5 Ultrium SB3000c tape blade	BS580B
HP BL c-Class PCI express mezzanine pass through option kit	431643-B21

HPE power cords

Description	Option Part Number
HPE intelligent power distribution units power cords	
HP 1.37 m 250 V 16 A C19-C20 WW single IPD enabled jumper cord	TK744A
HPE 2.0 m 250 V 16 A C19-C20 WW single IPD enabled jumper cord	TK738A
HP 3.0 m 250 V 16 A C19-C20 WW single IPD enabled jumper cord	TK742A
HPE C19 - C20 Jumper Cords	

Description	Option Part Number
HPE C19 - C20 WW 250 V 16 A flint gray 1.20 m jumper cord	AF575A
HPE C19 - C20 WW 250 V 16 A flint gray 2.0 m jumper cord	AF574A
HPE C19 - C20 WW 250 V 16A 2.5 m jumper cord	295633-B22
HPE C19-C20 IN 250V 2.5 m Blk Jumper Cord	R1C66A
HPE C19 - C20 WW 250 V 16 A 4.5 m jumper cord	E7804A
HPE High Line Power Cords 200 - 240 V ac	
HP C19 -Nema L6-30P US/CA 250 V 16 A 4.5 m power cord	E7805A
HPE C19 - Nema L6-20P NA/JP 250 V 20 A high voltage 3.6 m power cord	AF593A
HP C19 - NBR-14136 BR 250 V 16 A 2.5 m power cord	AF592A
HP C19 - BS-1363/A UK/HK/SG 250 V 13 A 3.6 m power cord	359615-031
HPE C19 - CEE-VII EU 250 V 16 A 3.6 m power power	AF576A
HP C19 - AS3112-3 AU/NZ 250 V 15 A 3.6 m power cord	AF577A
HP C19 - SABS-164 ZA 250 V 16 A 3.6 m power cord	AF579A
HPE C19 - CEI-23-50 IT/CL 250 V 16 A 3.6 m power cord	AF580A
HP C19 - IEC-309 DK/SE/AR 250 V 16 A 3.6 m power cord	AF581A
HP C19 - IS-1293 IN/PK/BD 250 V 16 A 2.5 m power cord	AF582A
HP C19 - ISI-32 IL 250 V 16 A 2.5 m power cord	AF583A
HPE C19 - GB-1002 CN 250 V 16 A 2.5 m power cord	AF584A

Description	Option Part Number
HP C19 - CNS-690 TW 250 V 16 A 2.5 m power cord	AF585A
HPE 240 V ac 4.5 M unterminated End NA power cord	E7806A
HPE High Voltage Power Cords 277 V ac, 380 V dc	
HP SAFDGRID-SAFDGRID 277 V 15 A dc 0.76 m jumper cord	J6W98A
HP SAFDGRID-SAFDGRID 277 V 15 A dc 1.37 m jumper cord	J6W99A
HPE SAFDGRID-SAFDGRID 277 V 15 A dc 2.0 m jumper cord	J6X00A
HP SAFDGRID-LS-25 277 V 15 A ac 0.76 m jumper cord	J6X01A
HP SAFDGRID-LS-25 277 V 15 A ac1.37 m jumper cord	J6X02A
HPE SAFDGRID-LS-25 277 V 15 A ac 2. 0 m jumper cord	J6X03A

HPE Uninterruptible Power Systems (UPSs)

Description	Option Part Number
R5000 UPS	
HPE R5000 3U L630 high voltage NA/JP UPS	AF460A
HPE R5000 3U IEC309-32A high voltage internal UPS	AF461A
R7000 UPS	
HPE R7000 4U 50 A high voltage NA/JP UPS	AF462A
HPE R7000 4U IEC-32A high voltage internal UPS	AF463A

Description	Option Part Number
HPE R5KVA and R7KVA 3U extended runtime Module	AF464A
HPE R8000/3 UPS	
HPE R8000/3 8000 kVA three phase NA 6U Rackmount UPS	AF431A
HPE R8000/3 8000 kVA three phase internal 6U Rackmount UPS	AF432A
HPE R12000/3 UPS	
HPE R12000/3 12000 VA three phase NA 6U Rackmount UPS	AF429A
HPE R12000/3 12000 VA three phase internal 6U Rackmount UPS	AF430A
HPE Parallel 3 Phase (UPS RP36000/3)	
HP RP36000/3 36000 VA three phase NA UPS	AF438A
HP RP36000/3 36000 VA three phase internal UPS	AF439A
Expansion modules for RP36000/3 UPS	
HP RP12000/3 12000 VA three phase NA 6U Rackmount UPS	AF436A
HP RP12000/3 12000 VA three phase internal 6U Rackmount UPS	AF437A

HPE Power Distribution Units (PDUs)

Description	Option Part Number
HPE Basic Power Distribution Units (bPDUs)	
HPE Basic 4.9 kVA/L6-30P 24 A/208 V outlets (24) C13 (6) C19/Vertical NA/JP PDU	H5M59A

Description	Option Part Number
HPE Basic 7.3 kVA/60309 3-wire 32 A/230 V outl ets (24) C13 (6) C19/vertical internal PDU	H5M70A
HPE Basic 3Ph 8.6 kVA/L15-30P 24 A/208 V outl ets (24) C13 (6) C19/vertical NA/JP PDU	H5M62A
HPE Basic 3Ph 8.6 kVA/L21-30P 24 A/120-208 V o utlets (24) C13 (3) C19 (3) 5-20R/vertical NA/JP PD U	H5M64A
HPE Basic 3Ph 11 kVA/60309 5-wire 16 A/230 V o utlets (24) C13 (6) C19/vertical internal PDU	H5M72A
HPE G2 Basic 4.9kVA/L6-30P 24A/208V Outlets (3 6) C13 (6) C19/Vertical NA/JP PDU	P9Q42A
HPE G2 Basic 7.3kVA/60309 3-wire 32A/230V Outl ets (36) C13 (6) C19/Vertical INTL PDU	P9Q46A
HPE G2 Basic Modular 8.3kVA/CS8265C 40A/208V Outlets (6) C19/1U Horizontal NA/JPPDU	P9Q47A
HPE G2 Basic 3Ph 8.6kVA/L15-30P 24A/208V Outl ets (30) C13 (6) C19/Vertical NA/JPPDU	P9Q53A
HPE G2 Basic 3Ph 8.6kVA/L21-30P 24A/208V Outl ets (24) C13 (3) C19 (3) 5-20R/Vertical NA/JP PDU	P9Q55A
HPE G2 Basic 3Ph 11kVA/60309 5-wire 16A/230V Outlets (36) C13 (6) C19/Vertical INTLPDU	P9Q58A
HPE G2 Basic Modular 3Ph 8.6kVA/L15-30P 24A/2 08V Outlets (6) C19/1U Horizontal NA/JP PDU	P9Q52A
HPE G2 Basic Modular 3Ph 14.4kVA/CS8365C 40A/ 208V Outlets (6) C19/1U Horizontal NA/JP PDU	P9Q59A
HPE G2 Basic Modular 3Ph 17.3kVA/60309 60A 4 -wire 48A/208V Outlets (6) C19/1U Horizontal NA/J P PDU	P9Q60A
HPE G2 Basic Modular 3Ph 11kVA/60309 5-wire 16 A/230V Outlets (6) C19/1U Horizontal INTL PDU	P9Q57A
HPE G2 Basic Modular 3Ph 22kVA/60309 5-wire 32 A/230V Outlets (6) C19/1U Horizontal INTL PDU	P9Q63A
HPE Modular Power Distribution Units (PDU Cores)	
HPE Basic modular 4.9 kVA/L6-30P 24 A/208 V out lets (4) C19/Horizontal NA/JP core only PDU	252663-D74

Description	Option Part Number
HPE Basic modular 8.3 kVA/CS8265C 40 A/208 V outlets (4) C19/Horizontal NA/JP PDU	252663-D75
HPE Basic modular 3Ph 8.6 kVA/L15-30P 24 A/208 V outlets (6) C19/Horizontal NA/JP PDU	AF512A
HPE Basic modular 3Ph 14.4 kVA/CS8365C 40 A/208 V outlets (6) C19/Horizontal NA/JP PDU	AF519A
HPE Basic modular 3Ph 17.3 kVA/60309 60 A 4-wire 48 A/208 V outlets (6) C19/Horizontal NA/JP PDU	AF511A
HPE Basic modular 9.2 kVA/60309 63A 3-wire 40 A/230 V outlets (4) C19/Horizontal internal PDU	252663-B34
HPE Basic modular 7.3 kVA/60309 3-wire 32 A/230 V outlets (4) C19/Horizontal internal core only PDU	252663-B33
HPE Basic modular 3Ph 11 kVA/60309 5-wire 16 A/230 V outlets (6) C19/Horizontal internal PDU	AF513A
HPE Basic modular 3Ph 22 kVA/60309 5-wire 32 A/230 V outlets (6) C19/Horizontal internal PDU	AF518A
HPE Remote Monitoring Power Distribution Units (mPDUs)	
HPE Metered 4.9 kVA/L6-30P 24 A/208 V outlets (20) C13 (4) C19/vertical NA/JP PDU	D9N47A
HPE Metered 7.3 kVA/60309 32 A 3-wire/230 V outlets (20) C13 (4) C19/vertical internal PDU	D9N48A
HPE Metered 7.3 kVA/60309 32 A 3-wire/230 V outlets (32) C13 (4) C19/vertical internal PDU	D9N50A
HPE Metered 3Ph 8.6 kVA/L15-30P 24 A/208 V outlets (18) C13 (3) C19/vertical NA/JP PDU	D9N51A
HPE Metered 3Ph 8.6 kVA/L21-30P 24A/120-208 V outlets (18) C13 (3) C19 (3) 5- 20R/vertical NA/JP PDU	D9N53A
HPE Metered 3Ph 11 kVA/60309 5-wire 16A/230 V outlets (30) C13 (3) C19/vertical internal PDU	D9N57A

Description	Option Part Number
HPE Metered 3Ph 17.3 kVA/60309 60A 4-wire 48A /208 V outlets (24) C13 (3) C19/vertical NA/JP PDU	D9N54A
HP Environmental sensor for remote monitored and managed PDUs	E2D53A
HPE Intelligent Power Distribution Units (iPDUs)	
HPE Intelligent modular 4.9 kVA/L6-30P 24A/208 V outlets (6) C19/Horizontal NA/JP PDU	AF520A
HPE Intelligent modular 3Ph 17.3kVA/IEC 60309 60A 4-wire 48A/208 V (12) C19/Horizontal NA/JP PDU	AF535A
HPE Intelligent modular 7.3 kVA/60309 3-wire 32A /230 V outlets (6) C19/Horizontal internal PDU	AF525A
HPE Intelligent modular 3Ph 8.6 kVA/L15-30P 24 A /208 V outlets (6) C19/Horizontal NA/JP PDU	AF522A
HPE Intelligent modular 3Ph 11 kVA/60309 5-wire 16 A/230 V outlets (6) C19/Horizontal internal PDU	AF526A
HPE Intelligent modular 3Ph 17.3 kVA/60309 60A 4-wire 48 A/208 V (6) C19/Horizontal NA/JP PDU	AF523A
HPE Intelligent modular 3Ph 22 kVA/60309 5-wire 32 A/230 V outlets (6) C19/Horizontal internal PDU	AF527A
HPE Intelligent modular 3Ph 22kVA/60309 5-wire 32A/230 V outlets (12) C19/Horizontal internal PDU	AF538A

HPE data center racks

Description	Option Part Number
HPE 11000 G2 Series Racks	
HP 42U 600 mm x 1075 mm advanced pallet rack	H6J65A
HP 42U 600 mm x 1200 mm advanced pallet rack	H6J67A

Description	Option Part Number
HP 42U 800 mm x 1200 mm advanced pallet rack	H6J69A
HP 48U 600 mm x 1075 mm advanced pallet rack	H6J87A
HP 36U 600 mm x 1075 mm advanced pallet rack	H6J77A
HP 22U 600 mm x 1075 mm advanced pallet rack	H6J83A
HPE Intelligent Series Rack	
HP 36U 600 mm x 1075 mm enterprise pallet rack	BW895A
HP 42U 600 mm x 1075 mm enterprise pallet rack	BW903A
HP 47U 600 mm x 1075 mm enterprise pallet rack	BW911A
HPE Location Discovery Services	
HP 47U location discovery kit	BW947A
HP 42U location discovery kit	BW946A
HP 36U location discovery kit	BW945A

HPE tape backup

Description	Option Part Number
HP StoreEver LTO-6 Ultrium 6250 tape drive in 1U R ack-mount kit	C0L99A
HP StoreEver LTO-6 Ultrium 6650 SAS internal tape drive	EH963A
HP StoreEver LTO-6 Ultrium 6650 SAS external tape drive	EH964A
HPE StoreEver LTO-6 Ultrium 6250 internal tape dri ve	EH969A

Description	Option Part Number
HPE StoreEver LTO-6 Ultrium 6250 external tape drive	EH970A

HPE Rack options

Description	Option Part Number
HPE TFT7600 G2 KVM Console and Monitor	
HPE Server Console Switch G2 with Virtual Media and CAC	
HPE 0x2x16 KVM server console switch G2 with virtual media CAC software	AF618A
HPE 0x2x32 KVM server console switch G2 with virtual media CAC software	AF619A
HPE IP Console Switch G2 with Virtual Media and CAC	
HPE 1x1Ex8 KVM IP console switch G2 with virtual media CAC software	AF620A
HPE 2x1Ex16 KVM IP console switch G2 with virtual media CAC software	AF621A
HPE 4x1Ex32 KVM IP console switch G2 with virtual media CAC software	AF622A
HPE KVM Interface Adapters	
HPE KVM console USB interface adapter	AF628A
HPE KVM console USB 2.0 virtual media CAC interface adapter	AF629A
HPE KVM console serial/power G2 interface adapter	AF625A

HPE care pack services

Description	Option Part Number
Proactive Care Services	
HPE 3 yr Proactive care 24x7 c7000 enclosure service	U3C33E
HPE 3 yr Proactive care Call to Repair c7000 enclosure service	U3C36E
HPE 3 yr Proactive care 24x7 c7000 enclosure with Insight control service	U3P10E
HPE 3 yr Proactive care call to repair c7000 enclosure with insight control service	U3P13E
Installation and Start-up Services	
HPE BladeSystem c7000 infrastructure startup service	UE602E
HPE BladSys c7000 end network startup service	UE603E
HPE Hardware Install c-Class enclosure and server blade service	UE494E
HPE Installation during non standard hours c7000 enclosure + blade service	UG870E
Mission Critical Services	
Integrity Blade svr enclosure HW support	HA111A3#6Q6
Integrity Blade svr enclosure HW support	HA112A3#6Q6
Installation & Start-up Services	
HPE Support - bl860c enclosure insight SVC	HA114A1#57A
HP Startup BladSys c-Class end network SVC	HA124A1#56H

OS Compatibility

Feature	Description
HPE Insight management software	• **Insight Management** Software media available for download includes: ◦ HPE Insight Control ◦ HPE Insight Control for Microsoft System Ce nter ◦ HPE Insight Control for VMware vCenter Ser ver ◦ HPE Virtual Connect Enterprise Manager (VCEM) ◦ HPE Insight Dynamics/Matrix Operating Env ironment (Matrix OE) • **Service Pack for ProLiant** (SPP) - Users should use the HP SPP to perform firmware, driver, and related software updates. • **HPE iLO** - iLO simplifies server setup, health mo nitoring, power and thermal control, and lights-o ut remote administration of ProLiant ML, DL, an d BL servers. • **HPE Insight Control** - HPE Insight control, a p roduct option, delivers essential infrastructure m anagement that can help save time and money by making it easy to deploy, monitor, remote con trol, and optimize users IT infrastructure through a single, simple management console. • **HPE Matrix** - The HPE Matrix OE for ProLiant a nd Integrity servers is an integrated command c enter that helps user instantly adjust to dynamic business demands.
HPE OneView software	• The HPE OneView architecture combines server, storage, and networking with control of data cen

Feature	Description
	ter environmentals into a single, integrated mana gement platform. • Architected to deliver lifecycle management fo r the complete converged infrastructure, it facili tates collaboration, removes friction, collapses c ycle times, eliminates Error-Prone work, and acc elerates time to value. • HPE OneView combines management of servers and virtual connect with open integration to au tomate and customize existing tools and process es. With OneView, user will work smarter-with g reater visibility and control-and fully capitalize o n the benefits of a converged infrastructure.

Useful Links

Descriptions	Direct Links
Alerts	**Click here to view "Alerts, Security Bulletin, Adv isory, Notice and other documents of HPE Blade System c7000 Enclosures".**
Drivers and Softwares	**Click here to view "Drivers and Softwares, Firmwa re, Driver, BIOS, Application, Utility, Operating System, Software document of HPE BladeSystem c7000 Enclosures".**
Knowledge Articles	**Click here to view "Knowledge Articles, Troublesh ooting, FAQ, How To, Informational document of H PE BladeSystem c7000 Enclosures".**
Manuals	**Click here to view "Manuals, Guides, Release N otes, Troubleshooting articles and other related d ocument of HPE BladeSystem c7000 Enclosures".**
Videos	**Click here to access "Videos of Remove/Replace, Setup/Installation, Troubleshooting, Managemen**

Descriptions	Direct Links
	t/Operations of HPE BladeSystem c7000 Enclosures".