HPE Synergy 480 Gen10 Plus Compute Module User Guide

Part Number: P26989-003
Published: February 2025
Edition: 3

HPE Synergy 480 Gen10 Plus Compute Module User Guide

Abstract

This document is for the person who installs, administers, and troubleshoots the HPE Synergy system. Hewlett Packard Enterprise assumes you are qualified in the servicing of computer equipment and trained in recognizing hazards in products with hazardous energy levels.

Part Number: P26989-003
Published: February 2025
Edition: 3

© Copyright 2025 Hewlett Packard Enterprise Development LP

Notices

The information contained herein is subject to change without notice. The only warranties for Hewlett Packard Enterprise products and services are set forth in the express warranty statements accompanying such products and services. Nothing herein should be construed as constituting an additional warranty. Hewlett Packard Enterprise shall not be liable for technical or editorial errors or omissions contained herein.

Confidential computer software. Valid license from Hewlett Packard Enterprise required for possession, use, or copying. Consistent with FAR 12.211 and 12.212, Commercial Computer Software, Computer Software Documentation, and Technical Data for Commercial Items are licensed to the U.S. Government under vendor's standard commercial license.

Links to third-party websites take you outside the Hewlett Packard Enterprise website. Hewlett Packard Enterprise has no control over and is not responsible for information outside the Hewlett Packard Enterprise website.

Acknowledgments

Adobe, the Adobe logo, Acrobat, and the Adobe PDF logo are either registered trademarks or trademarks of Adobe in the United States and/or other countries.

AMD, the AMD Arrow symbol, ATI, and the ATI logo are trademarks of Advanced Micro Devices, Inc.

Ampere®, Altra®, and the A®, and Ampere® logos are registered trademarks or trademarks of Ampere Computing.

Arm® is a registered trademark of Arm Limited (or its subsidiaries) in the U.S. and/or elsewhere.

Bluetooth is a trademark owned by its proprietor and used by Hewlett Packard Enterprise under license.

DLTtape logo and SDLTtape logo are trademarks of Quantum Corporation in the U.S. and other countries.

Docker and the Docker logo are trademarks or registered trademarks of Docker, Inc. in the United States and/or other countries.

ENERGY STAR® and the ENERGY STAR® mark are registered U.S. marks.

Google™ and the Google Logo are registered trademarks of Google LLC.

Graphcore®, the Graphcore wordmark and Poplar® are registered trademarks of Graphcore Ltd.

Intel Inside®, the Intel Inside logo, Intel®, the Intel logo, Itanium®, Itanium® 2-based, and Xeon® are trademarks of Intel Corporation in the U.S. and other countries.

Linux® is the registered trademark of Linus Torvalds in the U.S. and other countries.

McAfee® and the M-shield logo are trademarks or registered trademarks of McAfee, LLC or its subsidiaries in the United States and other countries.

Microsoft® and Windows® are either registered trademarks or trademarks of Microsoft Corporation in the United States and/or other countries.

MLCommons™, MLPerf™, and MLCube™ are trademarks and service marks of MLCommons Association in the United States and other countries.

NVIDIA® and NVIDIA logos are trademarks and/or registered trademarks of NVIDIA Corporation in the U.S. and other countries.

Oracle®, Java, and MySQL are registered trademarks of Oracle and/or its affiliates.

Qualcomm® and the Qualcomm logo are trademarks of Qualcomm Incorporated, registered in the United States and other countries, used with permission.

Red Hat® is a registered trademark of Red Hat, Inc. in the United States and other countries.

SAP®, SAP HANA®, and SAP S/4HANA® are the trademarks or registered trademarks of SAP SE or its affiliates in Germany and in other countries.

SAS®, the SAS® logo, EVAAS®, JMP®, the JMP® logo, IDeaS™, SAS/ACCESS®, SAS/ASSIST®, SAS/ETS®, SAS/FSP®, SAS/GRAPH®, SAS/IML®, SAS/OR®, SAS/QC®, SAS/SHARE®, THE POWER TO KNOW®, and VIYA® are registered trademarks or trademarks of SAS Institute, Inc.

sFlow® is a registered trademark of InMon Corp.

TOGAF® is a registered trademark of The Open Group. IT4IT™ is a trademark of The Open Group.

UNIX® is a registered trademark of The Open Group.

VMware®, VMware NSX®, VMware VCenter®, and VMware vSphere® are registered trademarks or trademarks of VMware, Inc. and its subsidiaries in the United States and other jurisdictions.

X/Open® is a registered trademark, and the X device is a trademark of X/Open Company Ltd. in the UK and other countries.

All third-party marks are property of their respective owners.

Table of contents

Component identification 8
- Front panel LEDs and buttons 8
- Front drive cage options 10
  - Standard two-drive kit 10
  - Premium four-drive kit 11
  - Front PCIe accelerator enablement kit 12
  - Driveless front panel 12
- Serial label pull tab information 13
- Drive numbering 13
- Smart Carrier (SC) drive LED definitions 15
- SFF flash adapter components and LED definitions 16
- System board components 18
  - System maintenance switch 19
  - Processor, heatsink, and socket components 20
  - Mezzanine connector definitions 21
  - DIMM slot locations 22
  - DIMM label identification 22
  - Intel Optane persistent memory 200 series for HPE label identification 24
  - Enterprise Midline USB 26
  - LEDs 27
- Component and LED identification for HPE Synergy hardware 27

Operations 27
- Powering up the compute module 28
- Powering down the compute module 28
- Removing the drive blank 29
- Removing the compute module 30
- Removing the compute module end cap 32
- Removing the access panel 32
- Removing the DIMM baffle 33
- Removing the front drive cage 38
- Installing the compute module end cap 39
- Installing the access panel 40
- Installing the DIMM baffle 41

Setup 46

Installation overview ... 46
Installing the compute module ... 47
Completing the configuration ... 48
Hardware options installation ... 49
Introduction ... 49
Installing SAS, SATA, or solid state drives ... 50
Installing the SFF flash adapter option ... 51
Installing the M.2 SSD flash drive and adapter board ... 53
Installation options for front drive cages ... 55
Installing the driveless cage kit ... 56
Installing the standard two-drive kit ... 57
Installing the front PCIe accelerator enablement kit ... 59
Installing the premium four-drive kit for two SAS/SATA and two NVMe drives ... 60
Installing the premium four-drive kit for four NVMe drives ... 62
Installing the storage controller option ... 64
Installing mezzanine card options ... 65
Installing the P416ie-m controller mezzanine option ... 67
HPE Smart Storage Battery ... 69
HPE Smart Storage Hybrid Capacitor ... 70
Installing the energy pack option ... 70
Memory options ... 73
Memory population information ... 74
DIMM-processor compatibility ... 74
HPE SmartMemory speed information ... 74
Installing a DIMM ... 74
Intel Optane persistent memory 200 series for HPE ... 76
Persistent memory module-processor compatibility ... 76
Persistent memory module population information ... 77
System requirements for persistent memory module support ... 77
Installing persistent memory modules ... 78
Configuring the compute module for Intel Optane persistent memory 200 series for HPE ... 81
Persistent memory module relocation guidelines ... 81
Migrating a persistent memory module ... 83
HPE Trusted Platform Module 2.0 guidelines ... 83
Retaining the BitLocker recovery key/password ... 84
Cabling ... 84
Cabling resources ... 85

Energy pack option cabling ... 85
Cabling for the drive kits ... 86
Cabling for two SAS/SATA and two NVMe drives ... 86
Cabling for four NVMe drives ... 87
Cabling for the front PCIe accelerator enablement kit ... 87
P416ie-m Smart Array Controller cabling ... 88
Removing and replacing the system battery ... 89
Electrostatic discharge ... 90
Preventing electrostatic discharge ... 91
Grounding methods to prevent electrostatic discharge ... 91
Specifications ... 92
Compute module environmental specifications ... 92
Compute module physical specifications ... 93
HPE Synergy documentation resources ... 93
HPE Synergy firmware update resources ... 93
HPE Synergy documentation map ... 94
Websites ... 95
Support and other resources ... 95
Accessing Hewlett Packard Enterprise Support ... 96
HPE product registration ... 96
Accessing updates ... 97
Remote support ... 97
Warranty information ... 98
Regulatory information ... 98
Documentation feedback ... 99

Component identification

Subtopics

Front panel LEDs and buttons
Front drive cage options
Serial label pull tab information
Drive numbering
Smart Carrier (SC) drive LED definitions
SFF flash adapter components and LED definitions
System board components
Component and LED identification for HPE Synergy hardware

Front panel LEDs and buttons

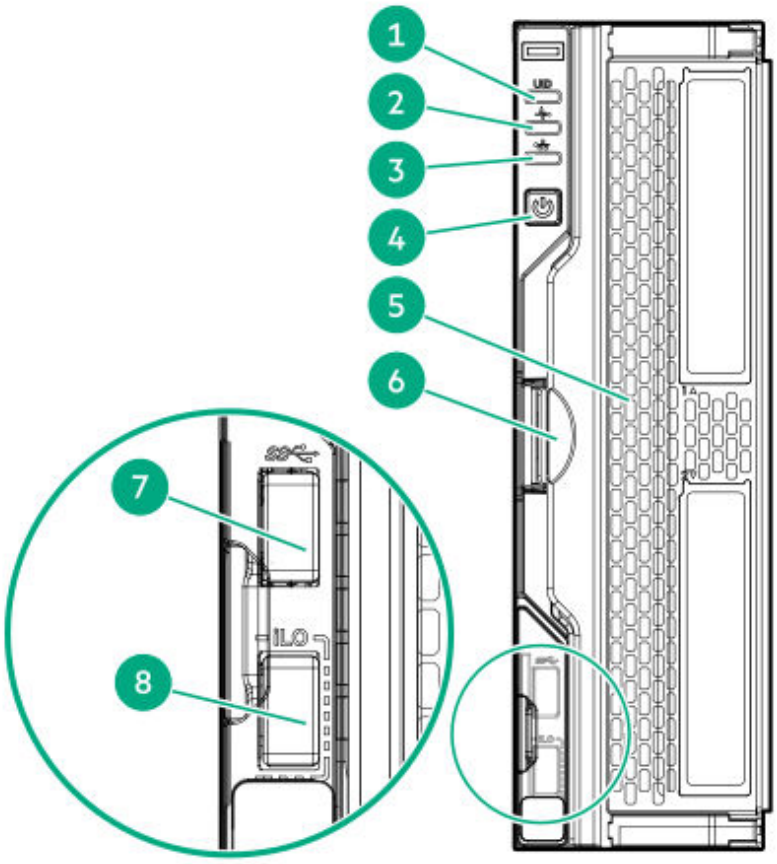

The drive configuration will vary depending on the drive kit.

Item	Description	Status
1	UID LED	Solid blue = Activated Flashing blue (1 Hz/cycle per sec) = Remote managemen t or firmware upgrade in progress Off = Deactivated
2	Health status LED	Solid green = Normal Flashing green (1 Hz/cycle per sec) = iLO is rebooting. Flashing amber = System degraded Flashing red (1 Hz/cycle per sec) = System critical
3	Mezzanine NIC status LED	Solid green= Link on any Mezzanine NIC Flashing green= Activity on any Mezzanine NIC Off = No link or activity on any Mezzanine NIC
4	Power On/Standby button and system power LED	Solid green = System on Flashing green (1 Hz/cycle per sec) = Performing power o n sequence Solid amber = System in standby Off = No power present **NOTE:** If all other LEDs are off, no compute mod ule power is present (facility power is not present, power cord is not attached, powe r supplies are not installed or a power su pply failure has occurred). If the health LE D is flashing green while the system powe r LED is off, the **Power On/Standby** butto n service is initializing or an iLO reboot is i n progress.
5	Drive cage	This release provides removable drive kit options for two, four drive bays or for a single GPU.
6	Handle release latch	The handle release latch for the compute module.
7	USB 3.0 connection	The external USB 3.0 connector located behind the serial pull tab.
8	iLO USB connection	The external USB iLO Service Port (169.254.1.2) located behind the serial label pull tab.

Front drive cage options

The HPE Synergy 480 Gen10 Plus Compute Module provides for following options for the front drive cage:

- HPE Synergy 480 Gen10 Plus standard two-drive kit
- HPE Synergy 480 Gen10 Plus premium four-drive kit
- HPE Synergy 480 Gen10 Plus front PCIe accelerator enablement kit
- HPE Synergy 480 Gen10 Plus driveless front panel

NOTE: Your front drive cage may look different from the front drive cages shown in this guide.

Subtopics

Standard two-drive kit
Premium four-drive kit
Front PCIe accelerator enablement kit
Driveless front panel

Standard two-drive kit

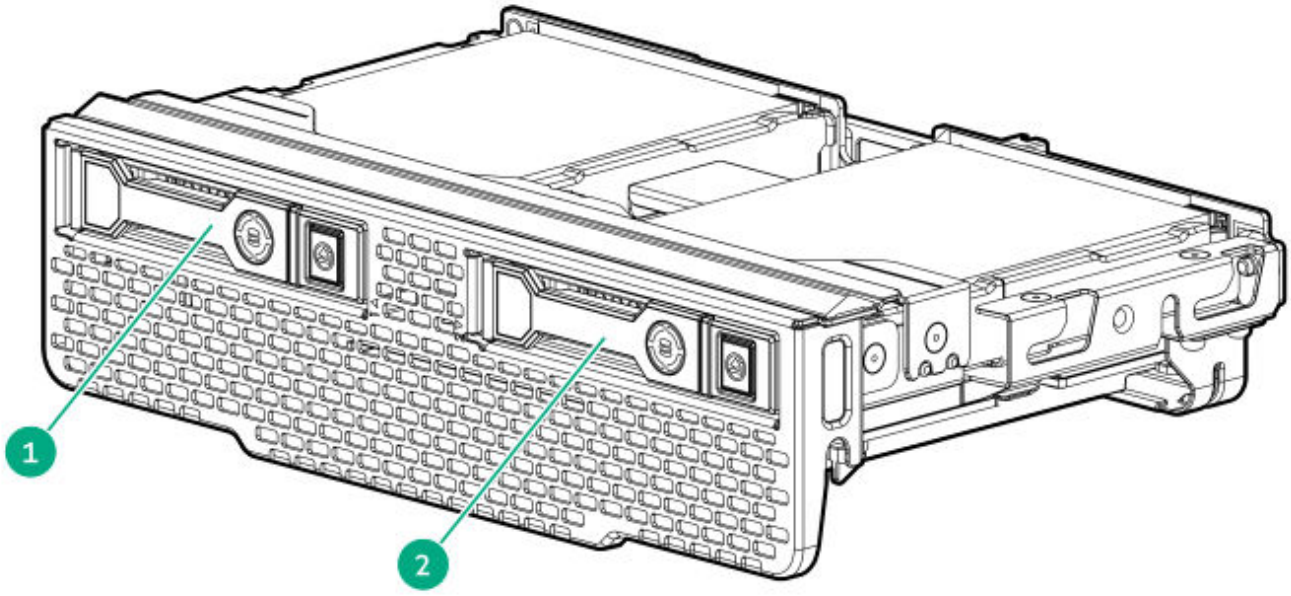

Item	
1	Drive bay 1 [1]
2	Drive bay 2 [1]

[1] If uFF drives (the SFF Flash Storage Adapter) are installed in the drive bays, the drive bay numbering is different. For more information, see Drive numbering.

Premium four-drive kit

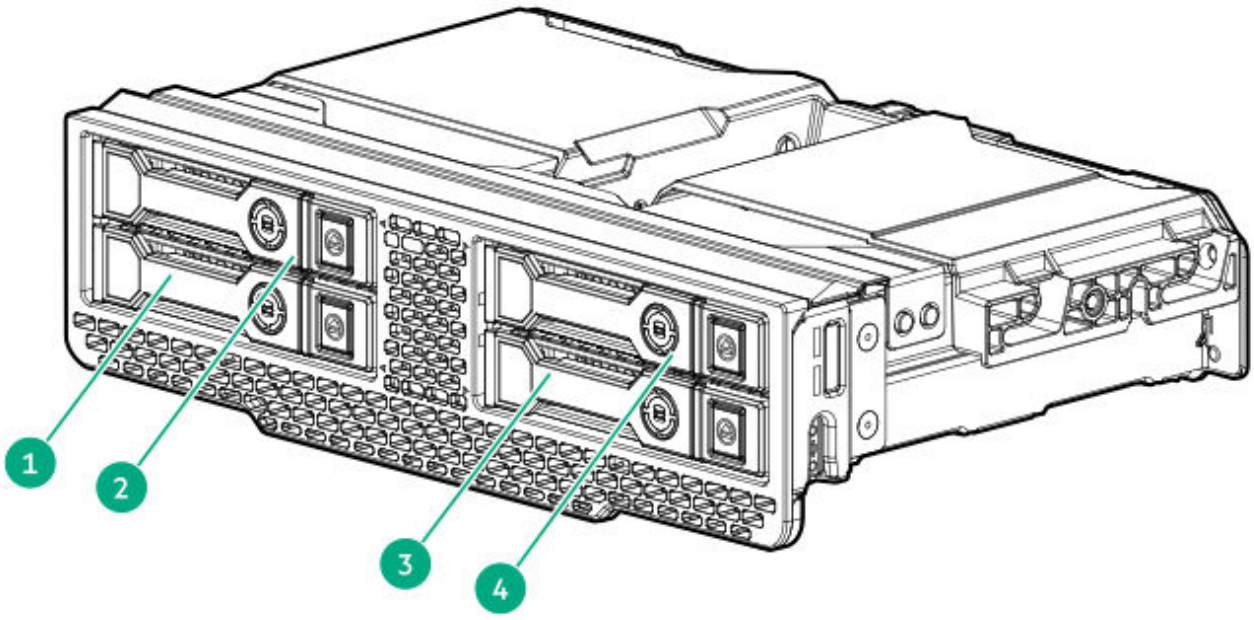

Item	Description
1	Drive bay 1e.
2	Drive bay 3.
3	Drive bay 2e.
4	Drive bay 4.

Front PCIe accelerator enablement kit

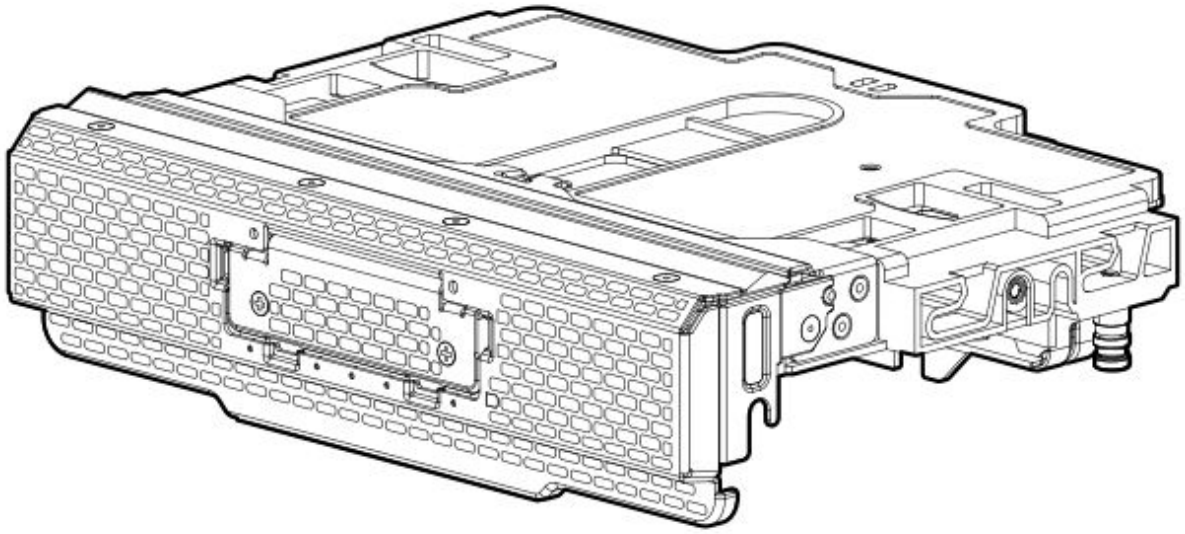

Driveless front panel

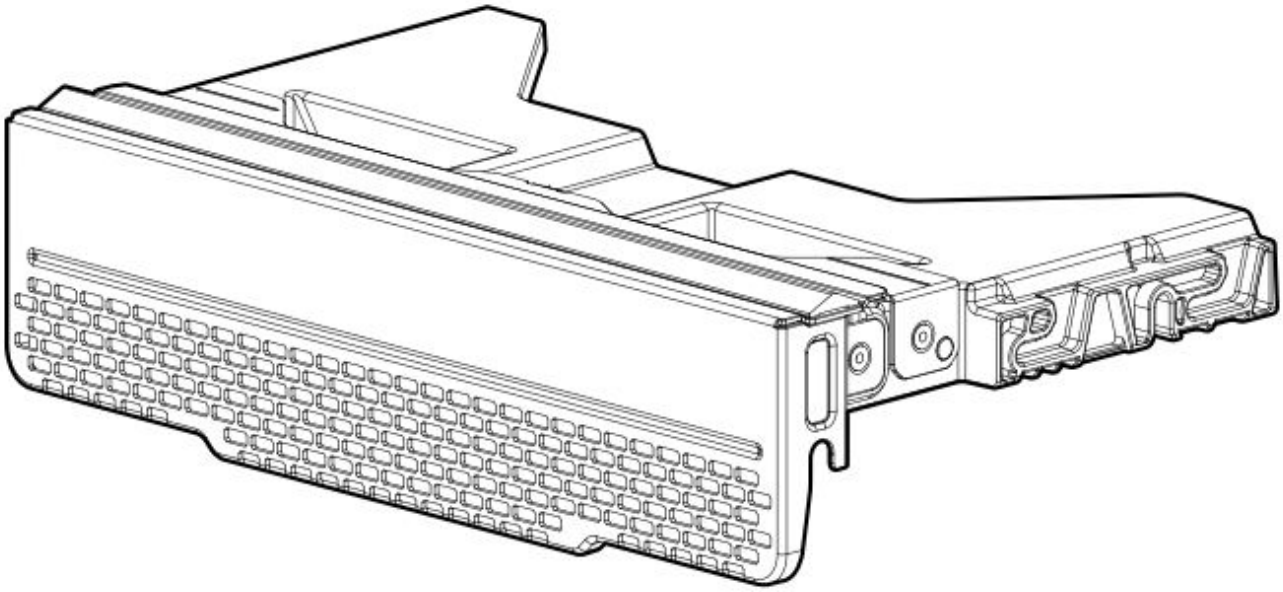

Serial label pull tab information

The serial label pull tab is on the front panel of the compute module. To locate the serial label pull tab, see Front panel LEDs and buttons. The serial label pull tab provides the following information:

- Product serial number
- HPE iLO information

Drive numbering

Depending on the configuration, this compute module can support hard drives, SSDs, NVMe drives, and uFF drives (supported in dual SFF flash adapters) in the drive bays. Depending on the device installed, the bay number might be different.

Standard two-drive kit

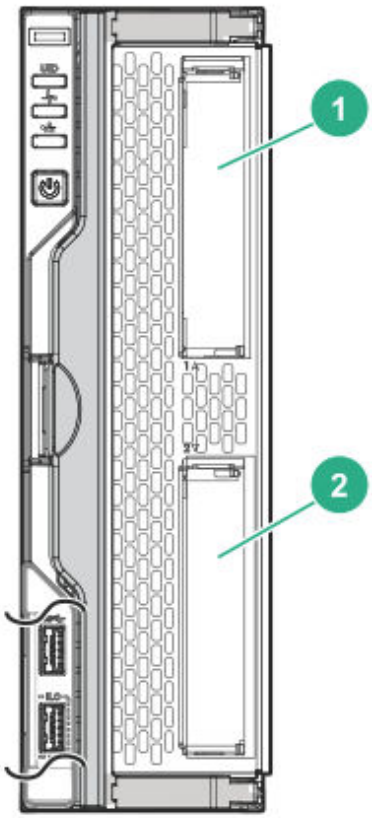

Item	Hard drive/SSD bay numbering	uFF drive bay numbering	NVMe drive bay numbering
1	1	1 and 101	1
2	2	2 and 102	2

Premium four-drive kit

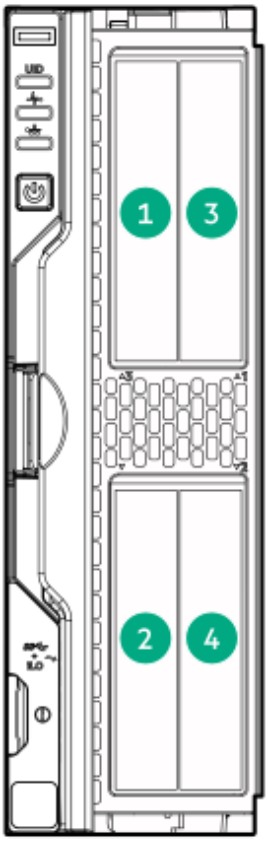

Hard drive/SSD bay numbering	Direct Connect Cabling	SLIM/SAS cabling
1	NVMe drive	NVMe drive
2	NVMe drive	NVMe drive
3	NVMe drive	SAS/SATA drive
4	NVMe drive	SAS/SATA drive

Smart Carrier (SC) drive LED definitions

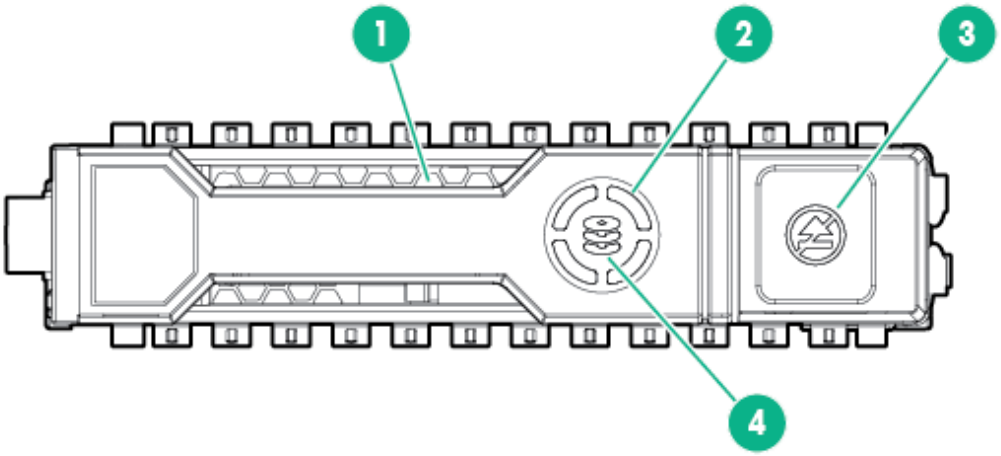

Item	LED	Status	Definition
1	Locate	Solid blue	The drive is being identified by a host application.
		Flashing blue	The drive carrier firmware is being updated or requires an update.
2	Activity ring	Rotating green	Drive activity
		Off	No drive activity
3	Do not remove	Solid white	Do not remove the drive. Removing the drive causes one or more of the logical drives to fail.
		Off	Removing the drive does not cause a logical drive to fail.
4	Drive status	Solid green	The drive is a member of one or more logical drives.
		Flashing green	The drive is doing one of the following: • Rebuilding • Performing a RAID migration • Performing a strip size migration • Performing a capacity expansion • Performing a logical drive extension • Erasing • Spare part activation
		Flashing amber/green	The drive is a member of one or more logical drives and p redicts the drive will fail.

Item	LED	Status	Definition
		Flashing amber	The drive is not configured and predicts the drive will fail.
		Solid amber	The drive has failed.
		Off	The drive is not configured by a RAID controller or a spare drive.

SFF flash adapter components and LED definitions

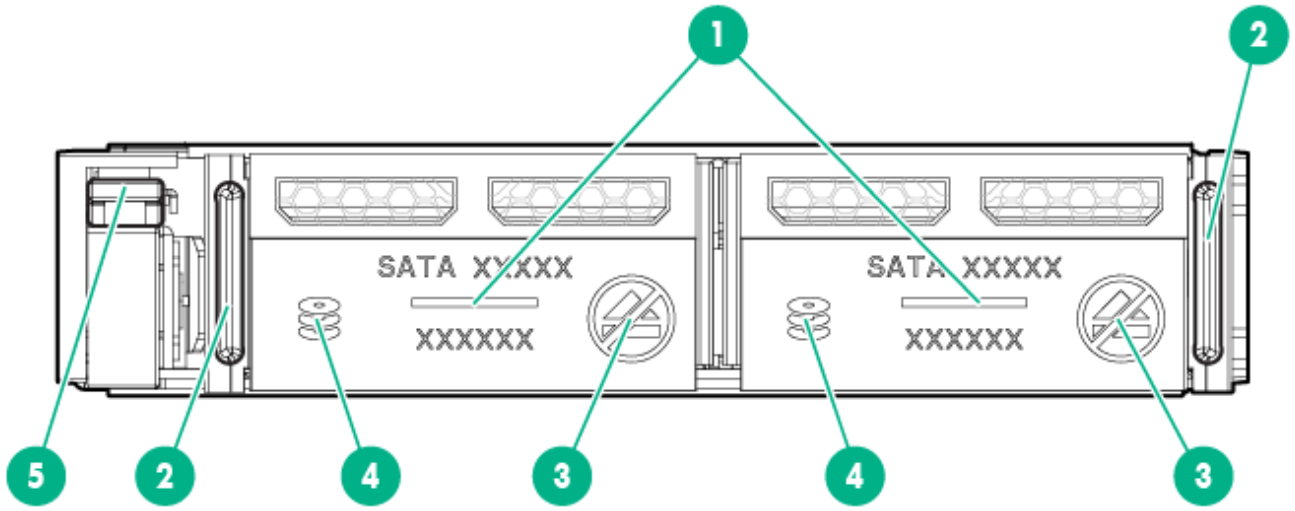

Item	Component	Description
1	Locate	• Off—Normal • Solid blue—The drive is being identified by a host application. • Flashing blue—The drive firmware is being updated or requires an update.
2	uFF drive ejection latch	Removes the uFF drive when released.
3	Do not remove LED	• Off—OK to remove the drive. Removing the drive does not cause a logical drive to fail. • Solid white—Do not remove the drive. Removing the drive causes one or more of the logical drives to fail.

Item	Component	Description
4	Drive status LED	• Off—The drive is not configured by a RAID controller or a spare drive. • Solid green—The drive is a member of one or more logical drives. • Flashing green (4 Hz)—The drive is operating normally and has activity. • Flashing green (1 Hz)—The drive is rebuilding, erasing, or performing a RAID migration, stripe size migration, capacity expansion, logical drive extension, or spare activation. • Flashing amber/green (1 Hz)—The drive is a member of one or more logical drives that predicts the drive will fail. • Solid amber—The drive has failed. • Flashing amber (1 Hz)—The drive is not configured and predicts the drive will fail.
5	Adapter ejection release latch and handle	Removes the SFF flash adapter when released.

System board components

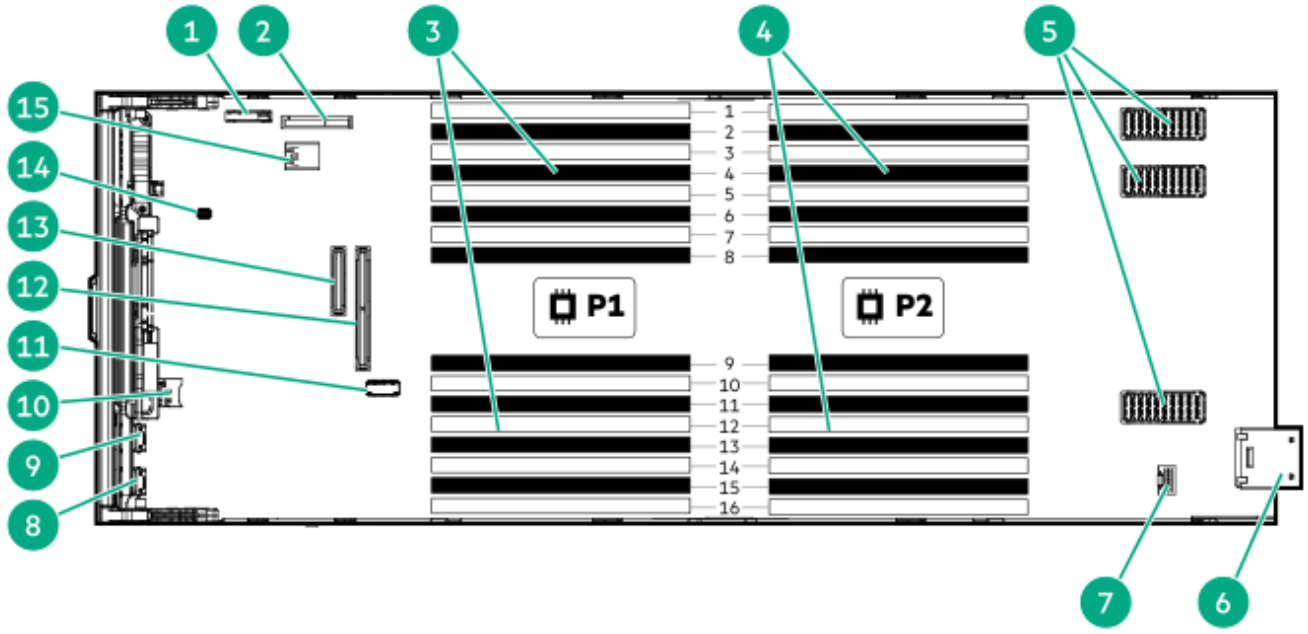

IMPORTANT: The HPE Synergy 480 Gen10 Plus Compute Module supports only the Pensando DSP DSC-25 2p SFP28 card. The iLO Sideband ALOM Module is not supported.

Item	Description
1	System battery
2	NVMe direct connect
3	Processor 1 DIMM slots (16)
4	Processor 2 DIMM slots (16)
5	Mezzanine connectors (M1, M2, and M3)
6	Management/power
7	Energy pack connector
8	External USB iLO Service Port (169.254.1.2) located behind the pull tab
9	External USB 3.0 connector located behind the pull tab
10	MicroSD connector
11	System maintenance switch
12	Drive assembly connector
13	SATA Interconnect/M.2 adapter connector
14	TPM connector

Item	Description
15	Internal USB 3.0 connector

Subtopics

System maintenance switch
Processor, heatsink, and socket components
Mezzanine connector definitions
DIMM slot locations
DIMM label identification
Intel Optane persistent memory 200 series for HPE label identification
Enterprise Midline USB
LEDs

System maintenance switch

Position	Default	Function
S1 1	Off	Off = HPE iLO password is enabled. On = HPE iLO password is disabled.
S2	Off	Reserved
S3	Off	Reserved
S4	Off	Reserved
S5*	Off	Off = Power-on password is enabled. On = Power-on password is disabled.
S6*	Off	Off = No function On = Reset configuration
S7	Off	Reserved
S8	Off	Reserved
S9	Off	Reserved
S10	Off	Reserved
S11	Off	Reserved
S12	Off	Reserved

[1] To access redundant ROM, set S1, S5 and S6 to On.

Processor, heatsink, and socket components

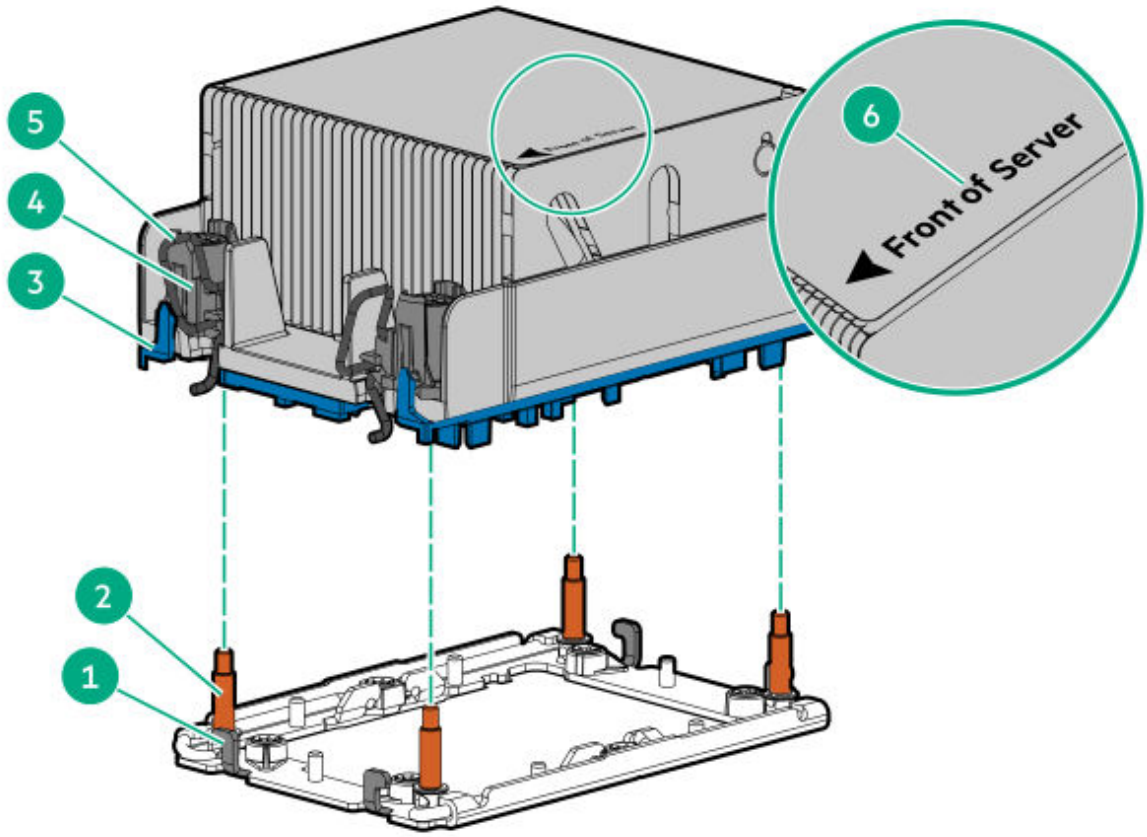

Item	Description
1	Heatsink tilt limiting hooks
2	Alignment post
3	Processor carrier
4	Heatsink nuts
5	Heatsink tilt limiting wires
6	Heatsink processor assembly label

Mezzanine connector definitions

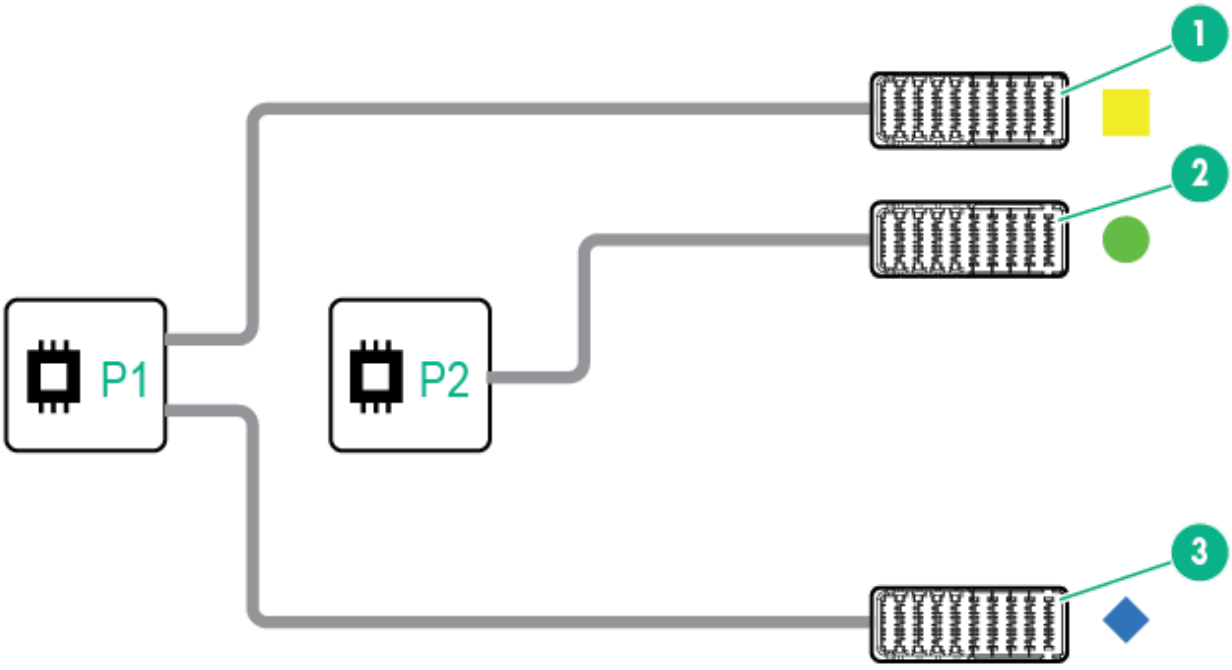

Item	Connector identification	Supported card types	Fabric	Supported ICM bays
1	Mezzanine connector 1 (M1)	Type C and Type D	1	ICM 1 and 4
2	Mezzanine connector 2 (M2)*	Type C and Type D	2	ICM 2 and 5
3	Mezzanine connector 3 (M3)	Type C only	3	ICM 3 and 6

NOTE:

Hewlett Packard Enterprise recommends that you install P416ie-m on mezzanine 1.

* When installing a mezzanine option on mezzanine connector 2, processor 2 must be installed.

DIMM slot locations

DIMM slots are numbered sequentially (1 through 16) for each processor. For more information on DIMM population rules, see **https://www.hpe.com/docs/server-memory**.

The slots indicate the slot order within each channel:

- White—First slot of a channel
- Black—Second slot of a channel

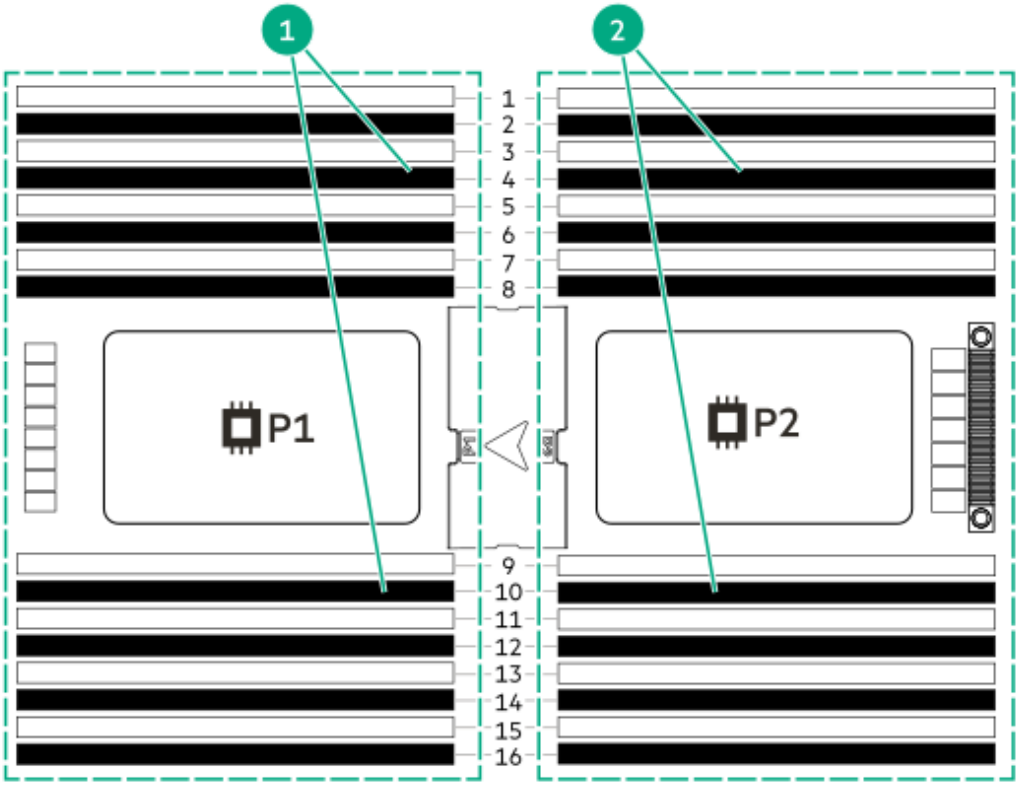

1	First socket channel
2	Second socket channel

DIMM label identification

To determine DIMM characteristics, see the label attached to the DIMM. The information in this section helps you to use the label to locate specific information about the DIMM.

For more information about product features, specifications, options, configurations, and compatibility, see the HPE DDR4 SmartMemory QuickSpecs:

https://www.hpe.com/support/DDR4SmartMemoryQS

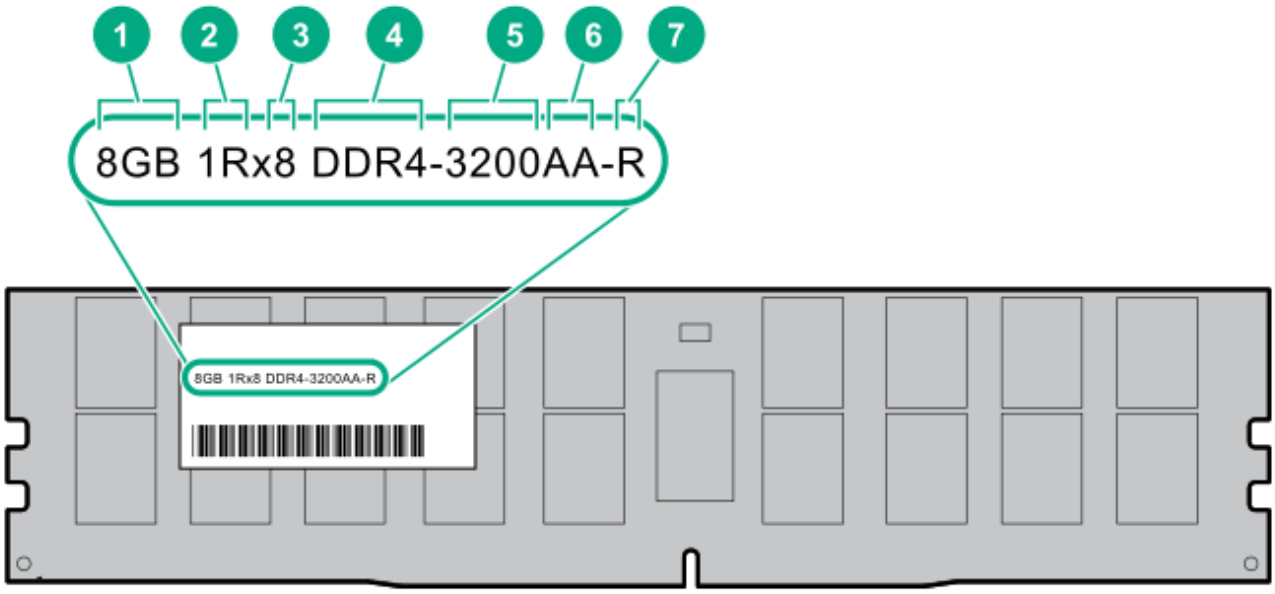

Item	Description	Example
1	Capacity [1]	8 GB 16 GB 32 GB 64 GB 128 GB 256 GB
2	Rank	1R = Single rank 2R = Dual rank 4R = Quad rank 8R = Octal rank
3	Data width on DRAM	x4 = 4-bit x8 = 8-bit
4	Memory generation	PC4 = DDR4
5	Maximum memory speed [1]	3200 MT/s
6	CAS latency	AA = CAS 22-22-22

Item	Description	Example
		AA = CAS 26-22-22 (for 3DS LRDIMM)
7	DIMM type	E = Unbuffered ECC (UDIMM) R = RDIMM (registered) L = LRDIMM (load reduced)

1 The maximum memory speed and capacity is a function of the memory type, memory configuration, and processor model.

Intel Optane persistent memory 200 series for HPE label identification

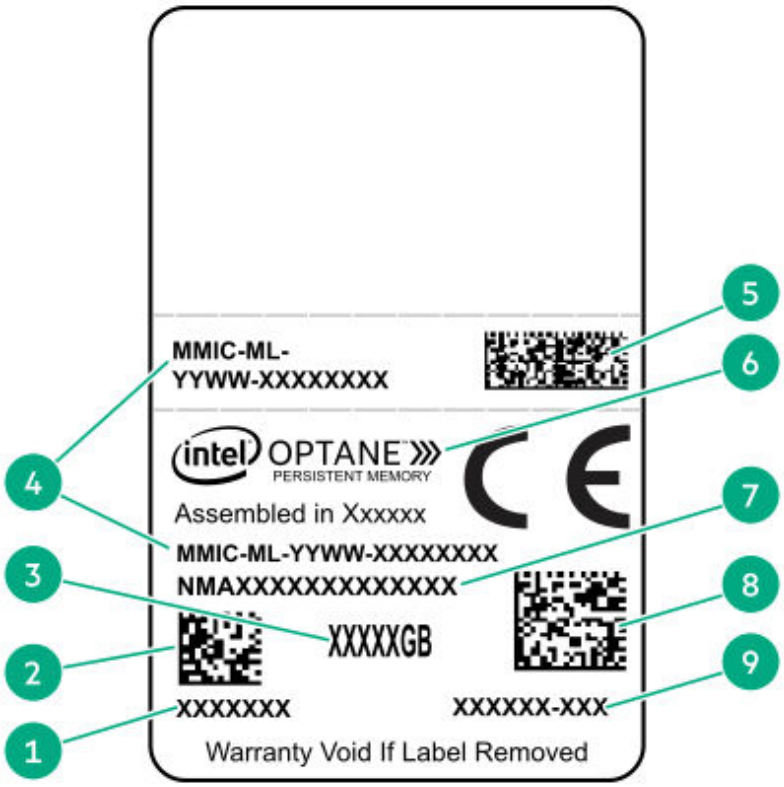

Item	Description	Example
1	Work Order Number	XXXXXXX
2	Work Order Number Barcode	XXXXXXX

Item	Description	Example
3	Capacity	128 GB 256 GB 512 GB
4	Unique ID number	8089-A2-1802-1234567A
5	Serial Number and Part Number Barcode	S8089A218040000168APNMAXXXXXXXXXX
6	Product Name	Intel® Optane™ persistent memory
7	Part Number	1234567A
8	Serial Number Barcode	8089-A2-1802-1234567A
9	PBA Number	XXXXXX-XXX

For more information about product features, specifications, options, configurations, and compatibility, see the product QuickSpecs on the Hewlett Packard Enterprise website (**https://www.hpe.com/support/persistentmemoryQS**).

Enterprise Midline USB

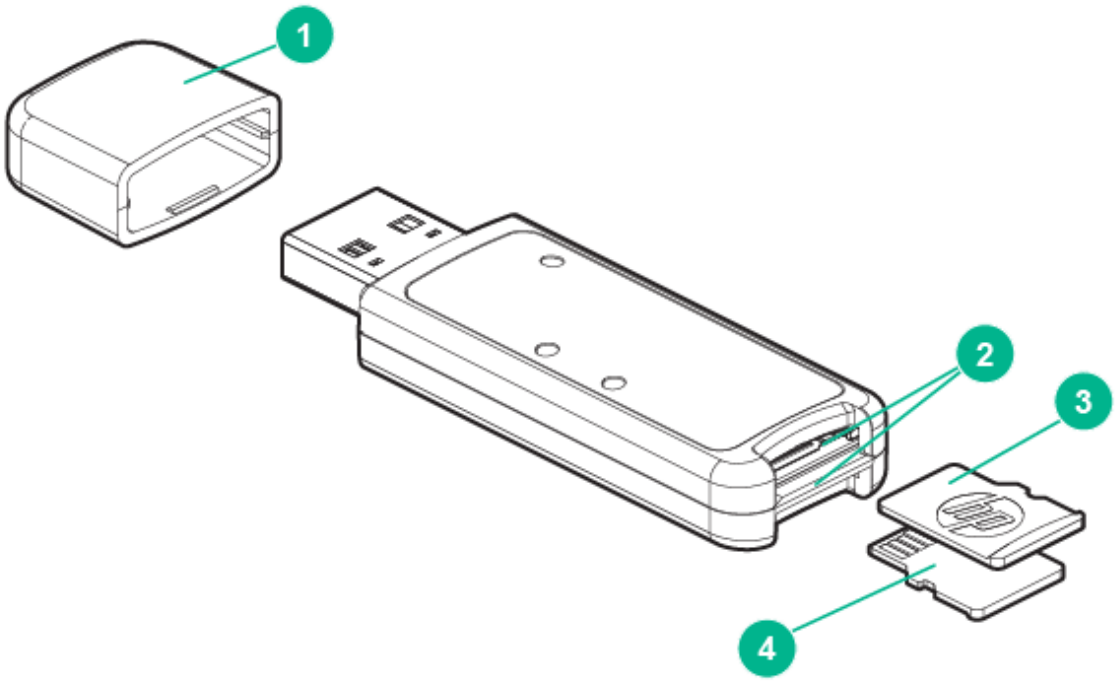

Item	Description
1	Cap
2	microSD card slot
3	microSD1 card
4	microSD2 card

LEDs

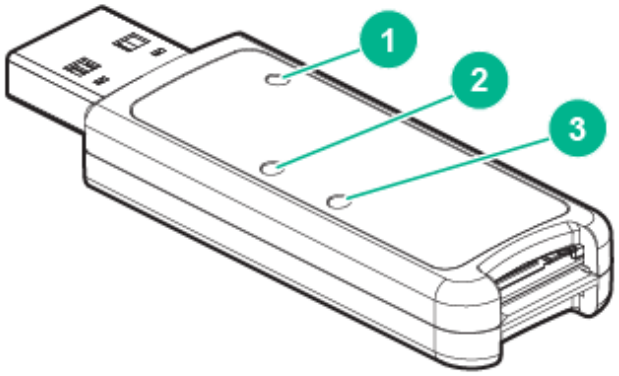

Item	Description	Status
1	Power LED	Green: Device is on and at least one microSD card is functioning. Red: Both microSD cards have failed.
2	SD2 LED	On: microSD card has failed. Off: microSD card is healthy.
3	SD1 LED	On: microSD card has failed. Off: microSD card is healthy.

Component and LED identification for HPE Synergy hardware

For more information about component and LED identification for HPE Synergy components, see the product-specific maintenance and service guide or the **HPE Synergy 12000 Frame Setup and Installation Guide** in the Hewlett Packard Enterprise Support Center.

Operations

Subtopics

Powering up the compute module
Powering down the compute module

Removing the drive blank
Removing the compute module
Removing the compute module end cap
Removing the access panel
Removing the DIMM baffle
Removing the front drive cage
Installing the compute module end cap
Installing the access panel
Installing the DIMM baffle

Powering up the compute module

About this task

To power up the compute module, use one of the following methods:

- Press the Power On/Standby button after the power LED has turned amber.
- Use the virtual power button through HPE iLO.

Powering down the compute module

About this task

Before powering down the compute module for any upgrade or maintenance procedures, perform a backup of the system and all data. Then, shut down, as appropriate, applications and operating systems. A successful shutdown is indicated by the system power LED displaying amber.

IMPORTANT:
Always attempt a controlled shutdown before forcing a shutdown. Application data can be lost when forcing a shutdown of applications and the OS.

Before proceeding, verify the following:

- The compute module is in standby mode by observing that the system power LED is amber.

- The UID LED is not flashing blue.

> **NOTE:**
>
> - When the compute module is in standby mode, auxiliary power is still being provided to the system.
> - If the UID LED is flashing blue, a remote session, or a firmware update is in progress.

To power down the compute module, use one of the following methods:

- To perform a controlled shutdown of applications and the OS before the compute module enters standby mode, do one of the following:
  - Press and release the **Power On/Standby** button.
  - Select the **Momentary press** power off selection in HPE OneView.
  - Select the **Momentary press** virtual power button selection in HPE iLO.
- To force the compute module to enter standby mode, do one of the following:
  - Press and hold the **Power On/Standby** button for more than four seconds.
  - Select the **Press and hold** power off selection in HPE OneView.
  - Select the **Press and hold** virtual power button selection in HPE iLO.

  These methods force the compute module to enter standby mode without properly exiting applications and the OS. If an application stops responding, use this method to force a shutdown.

Removing the drive blank

About this task

Remove the component as indicated.

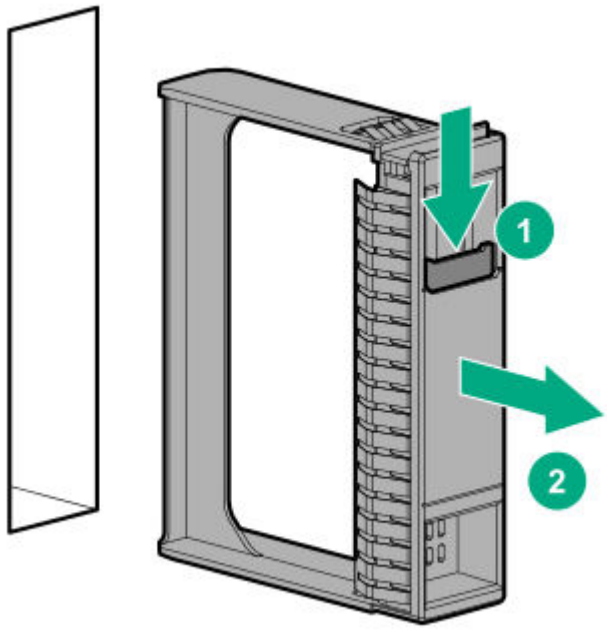

CAUTION: To prevent improper cooling and thermal damage, do not operate the compute module unless all bays are populated with either a component or a blank.

Removing the compute module

Prerequisites

CAUTION:

Before removing the compute module, verify that the compute module is in standby mode. In standby mode, the system power LED is off or solid amber. Also, verify that the UID LED is off or solid blue.

Procedure

1. Identify the proper compute module.
2. Power down the compute module.

3. Remove the compute module from the frame.

> **WARNING:**
>
> To reduce the risk of personal injury from hot surfaces, allow the drives and the internal system components to cool before touching them.

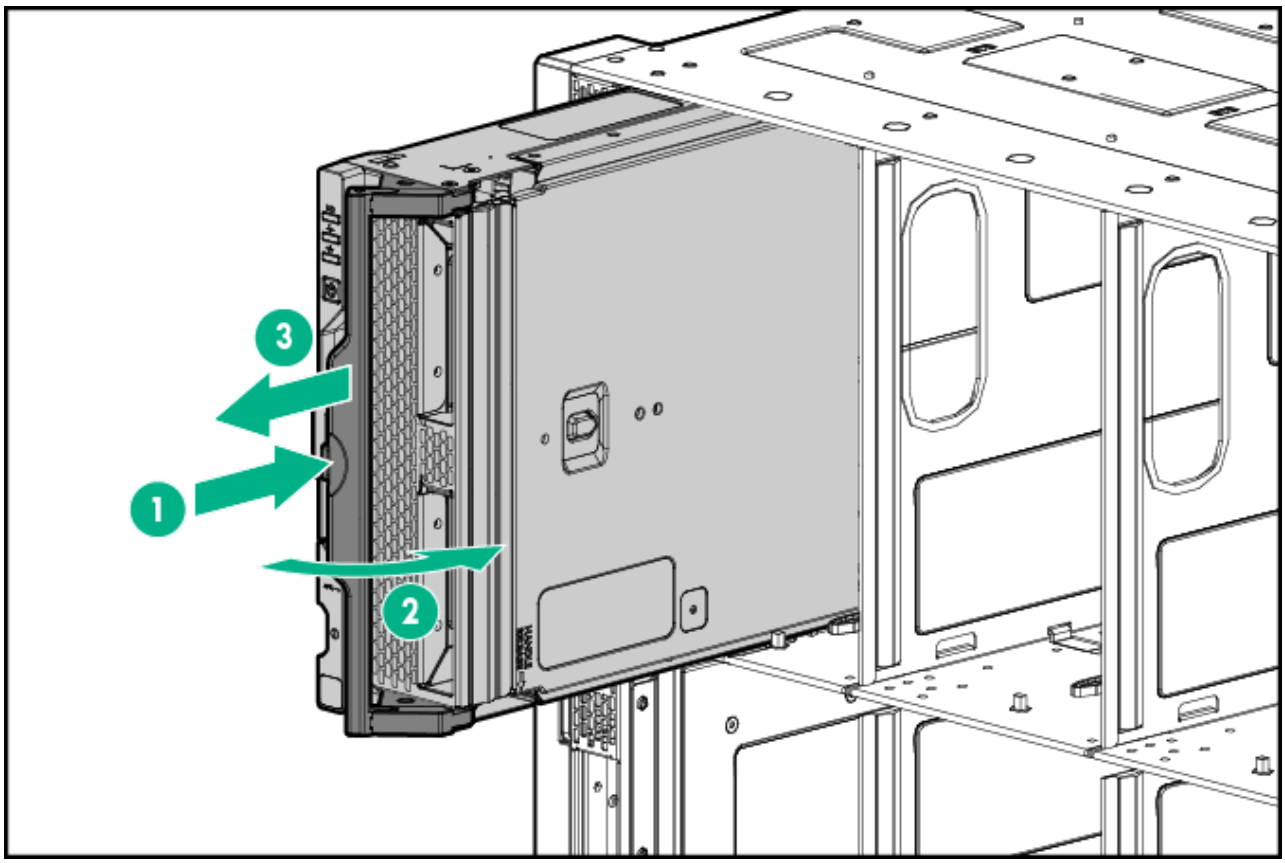

4. Place the compute module on a flat, level work surface.

> **CAUTION:**
>
> To prevent damage to electrical components, properly ground the compute module before beginning any installation procedure. Improper grounding can cause ESD.

5. Install the compute module end cap.

Results

To replace the component, reverse the removal procedure.

Removing the compute module end cap

About this task

Procedure

1. Place the compute module on a flat, level work surface.
2. Remove the compute module end cap.

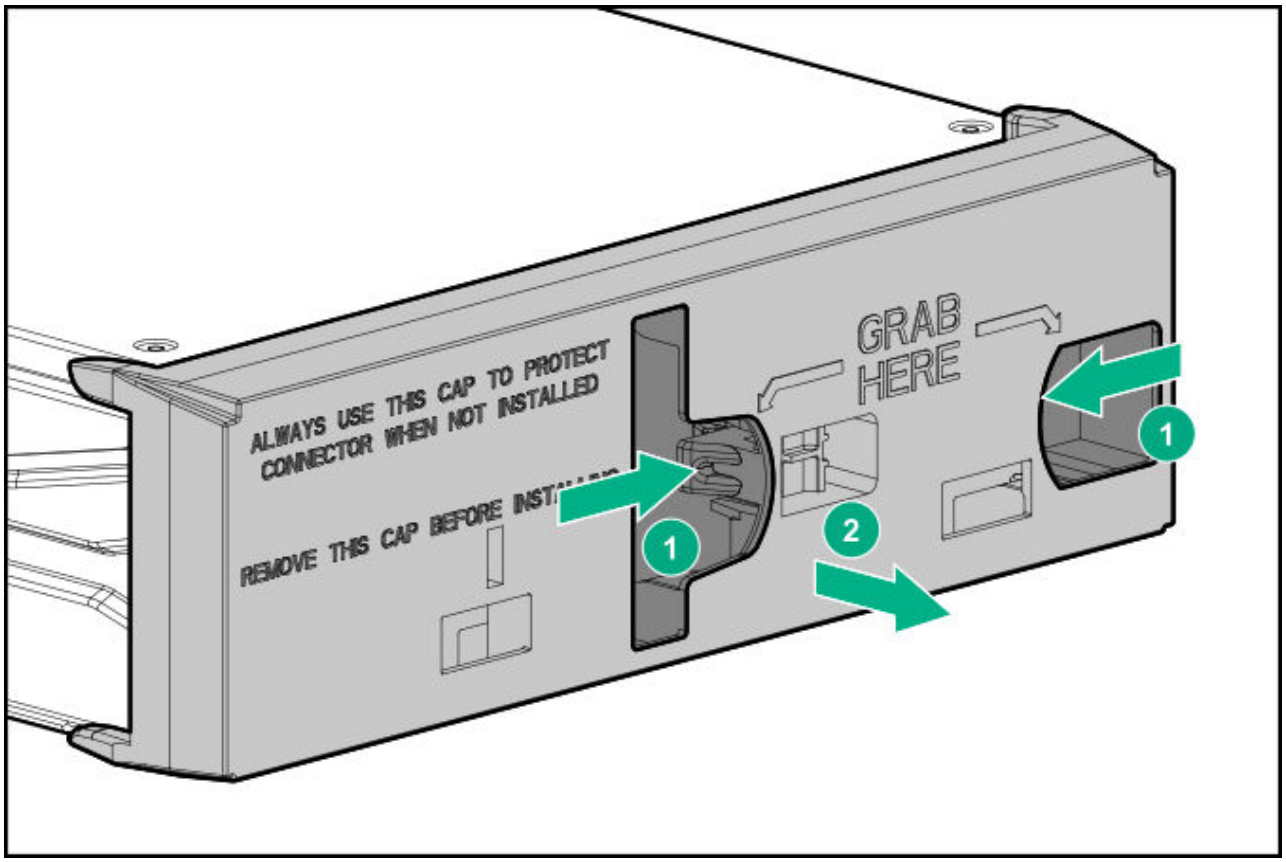

Removing the access panel

About this task

Procedure

1. Power down the compute module.

2. Remove the compute module.
3. Place the compute module on a flat, level work surface.
4. Press the access panel release button.

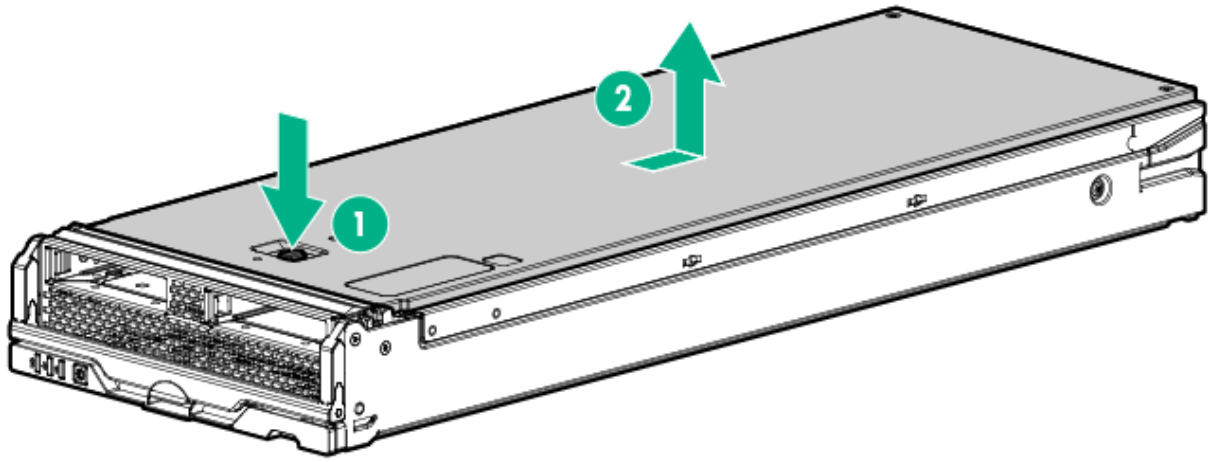

5. Slide the access panel towards the rear of the compute module, and then lift up to remove the panel.

Removing the DIMM baffle

About this task

This procedure outlines moving the DIMM baffle to access components (flipping the DIMM baffle over) and removing the DIMM baffle.

Procedure

1. Power down the compute module.
2. Remove the compute module.

3. Place the compute module on a flat, level work surface.
4. Remove the access panel.
5. If a SLIM/SAS cable is present, disconnect the SLIM/SAS cable connector from the drive assembly.

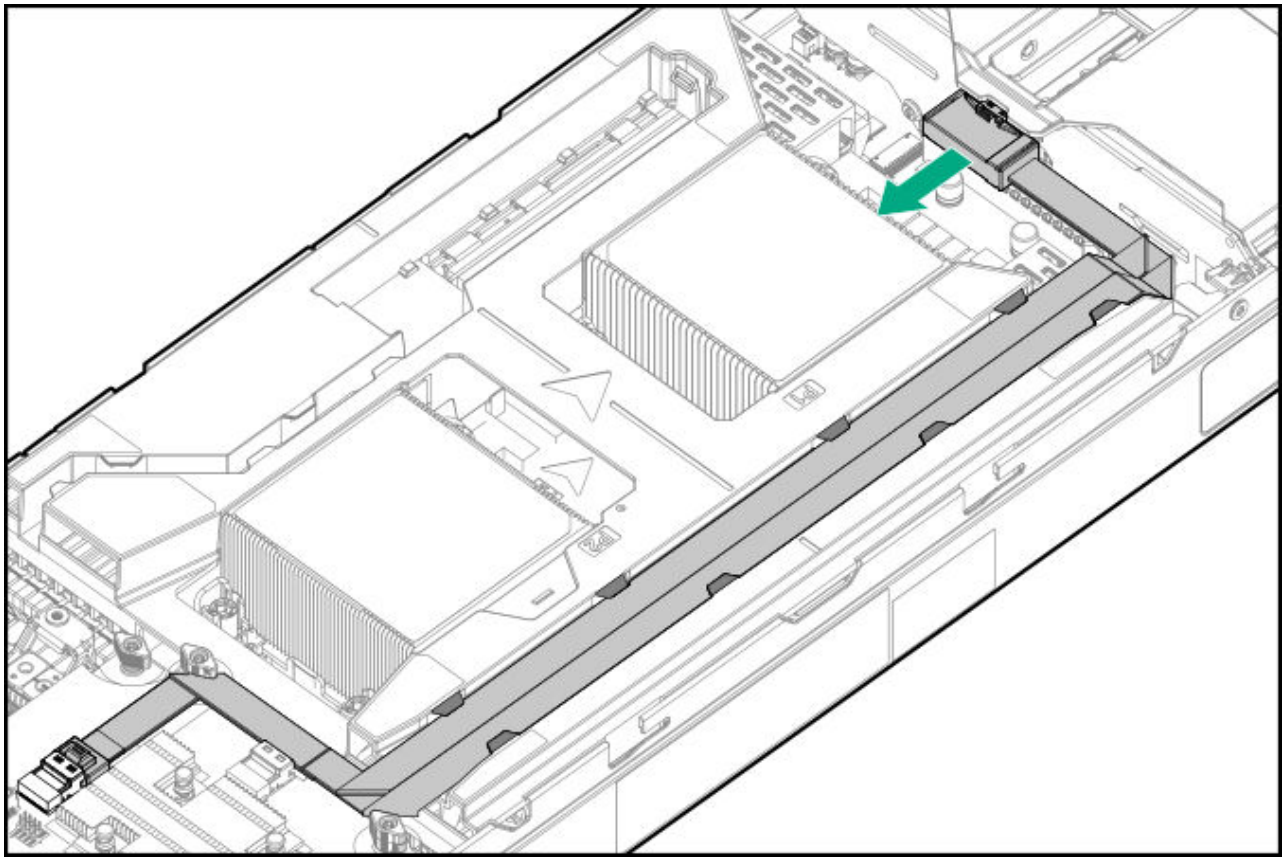

6. For most procedures, flip the DIMM baffle instead of removing the DIMM baffle from the system board.

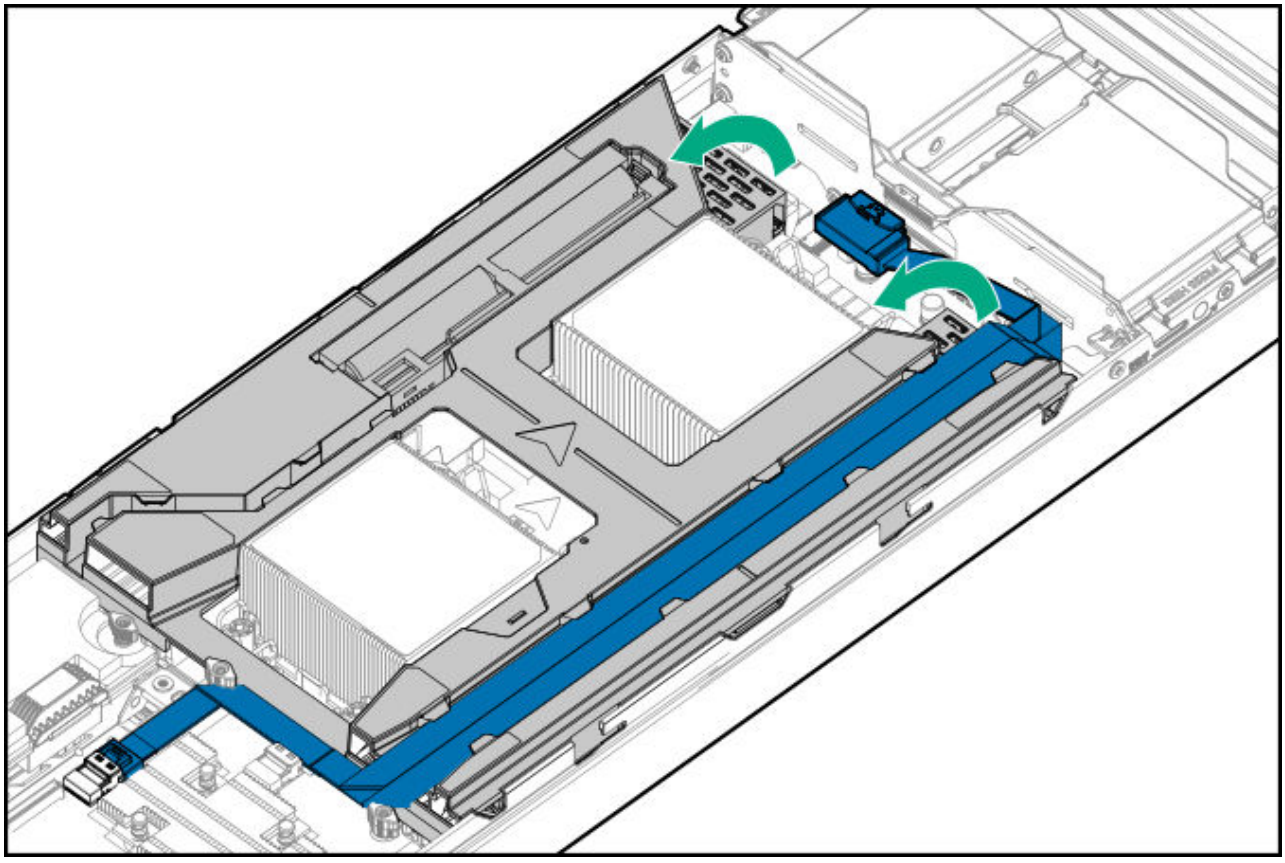

7. To remove the DIMM baffle from the system board:

   a. If a SLIM/SAS cable is present, remove the SLIM/SAS cable from the DIMM baffle.

> **NOTE:** Keep the SLIM/SAS cable attached to the Port 3i connector and move the rest of the cable off to the side.

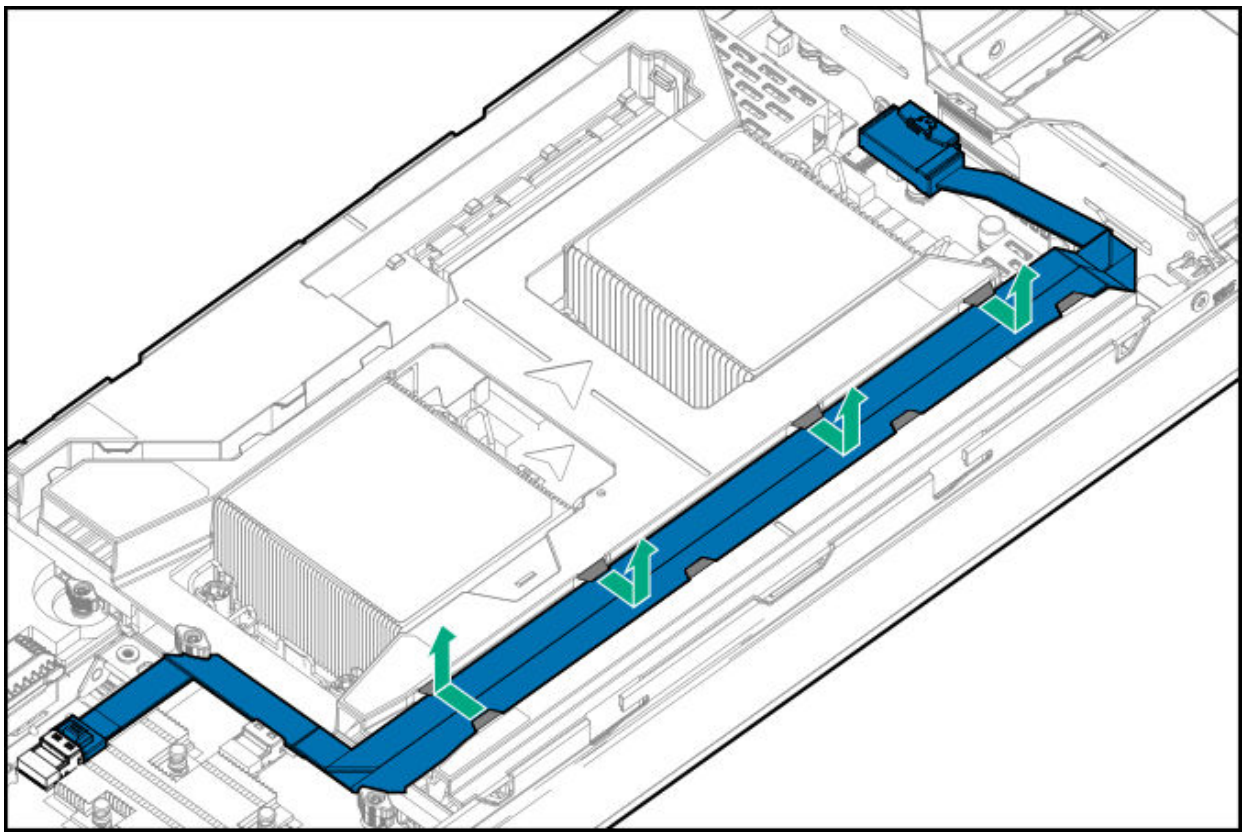

b. Remove the mezzanine option card.

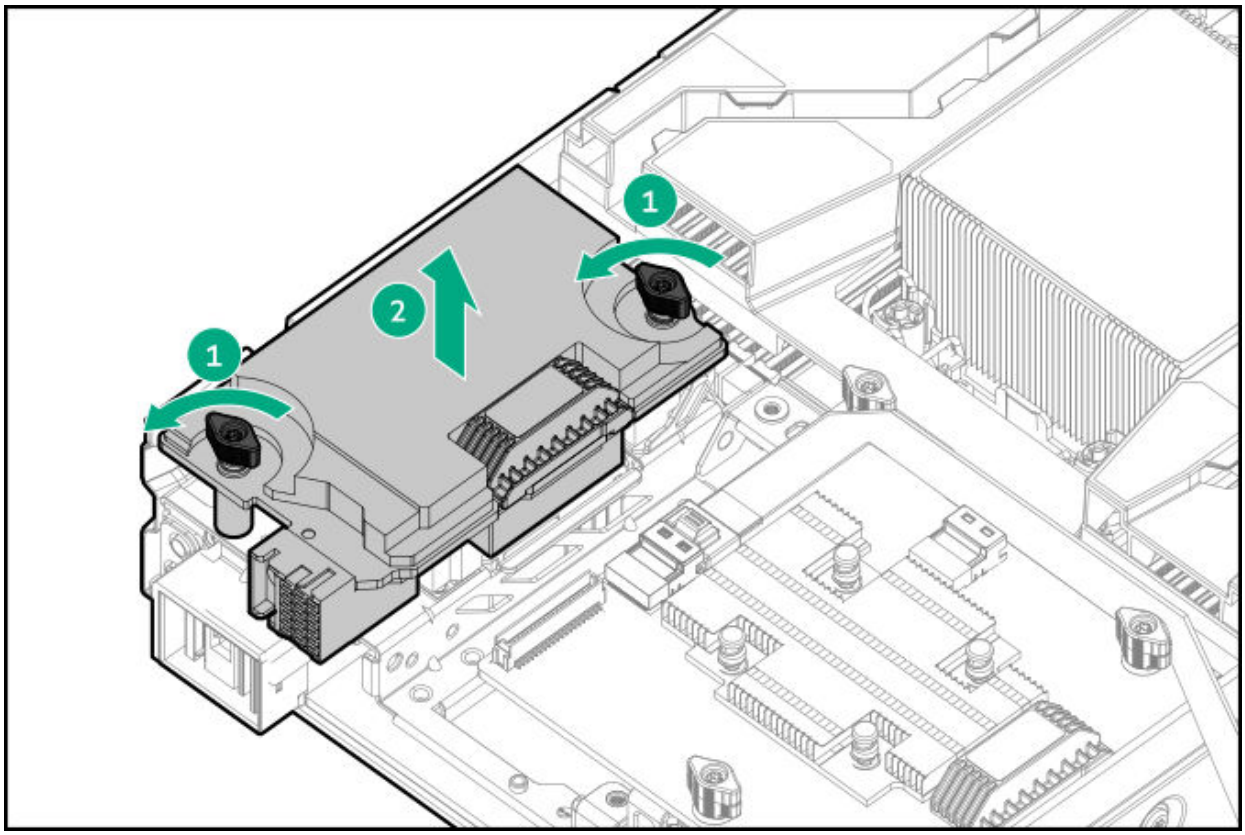

c. Unplug the cable for the energy pack.

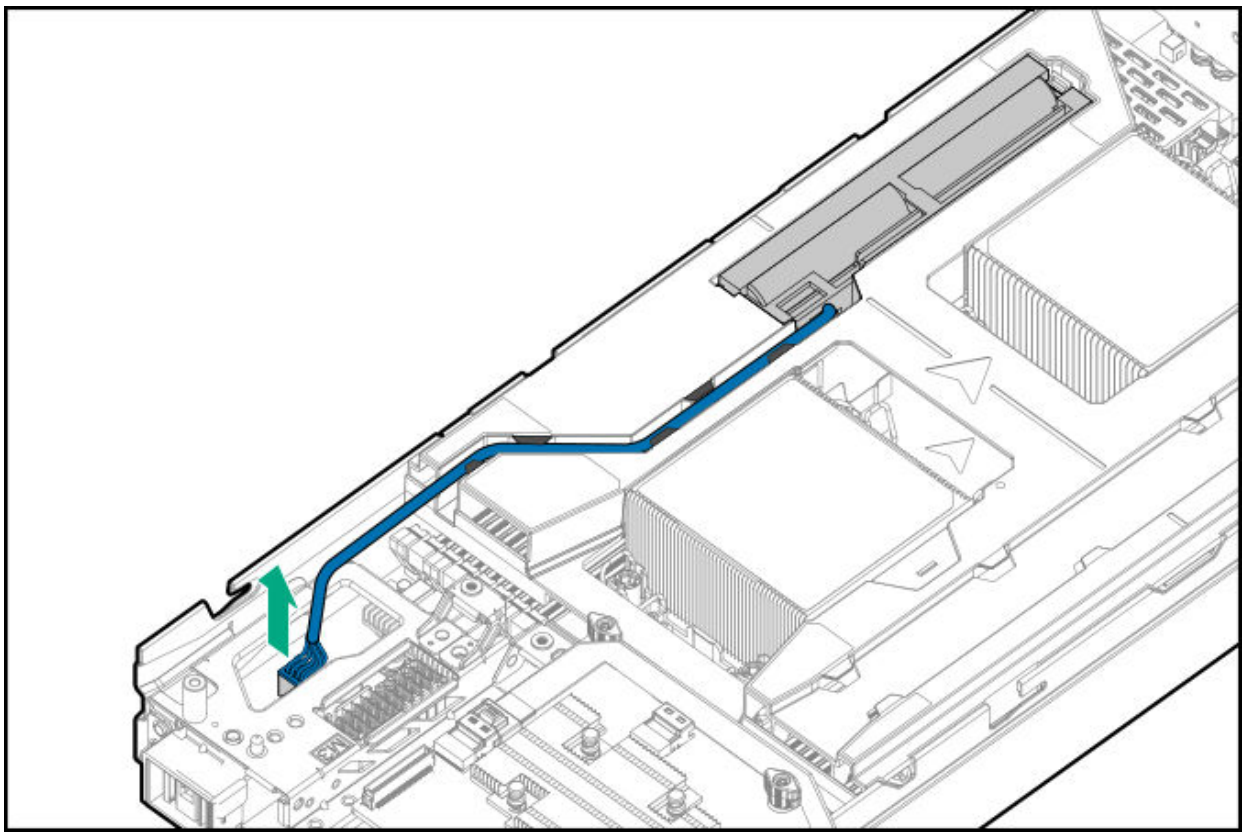

NOTE: Disconnect the energy pack cable from the port located under the mezzanine 3 option card.

8. Lift the DIMM baffle from the system board.

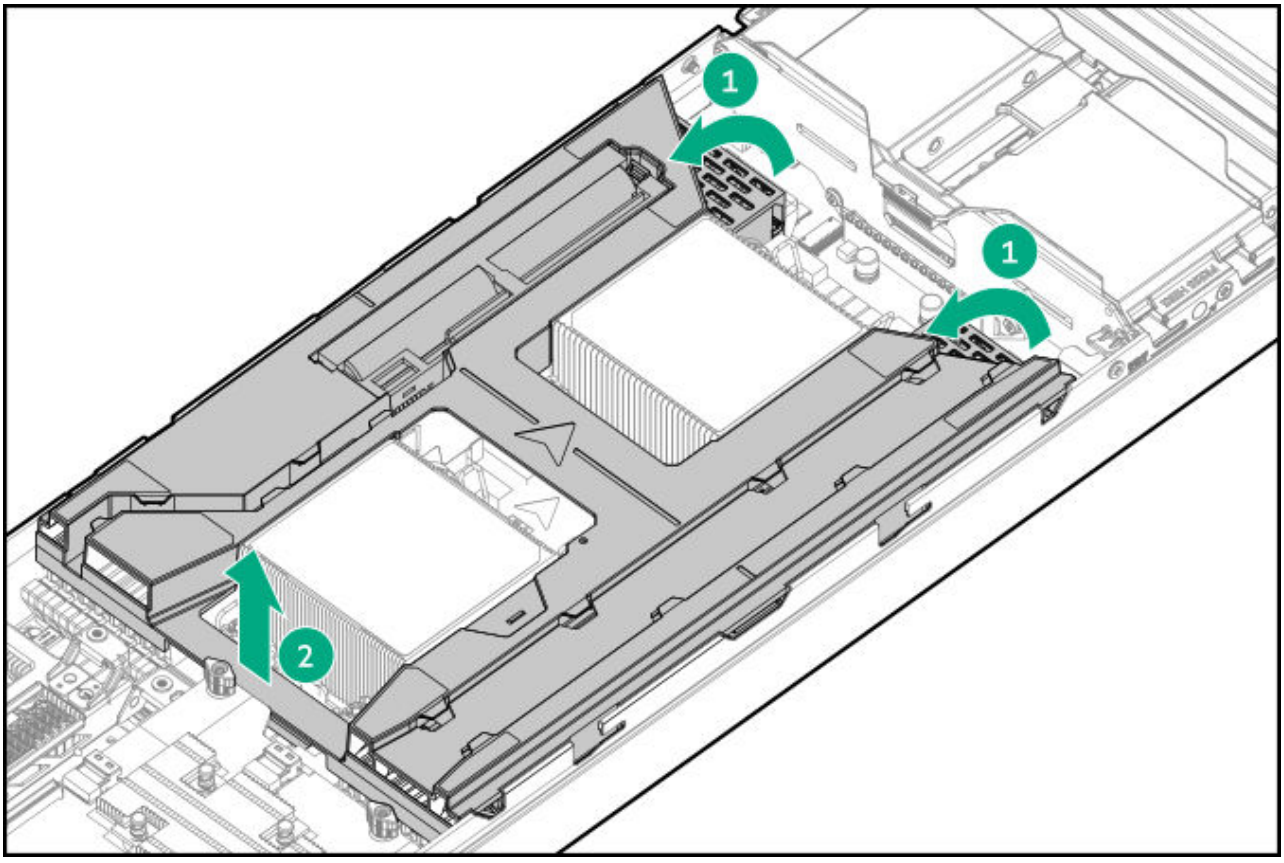

Removing the front drive cage

Procedure

1. Power down the compute module.
2. Remove the compute module.
3. Place the compute module on a flat, level work surface.
4. Remove the access panel.
5. Remove all drives, except for the driveless front cage kit.
6. Remove the cabling from the drive cage, except for the driveless cage and the two-drive cage, which have no cabling.
7. Remove the drive cage.

NOTE: The drive cage shown in the following image may be different than what you have.

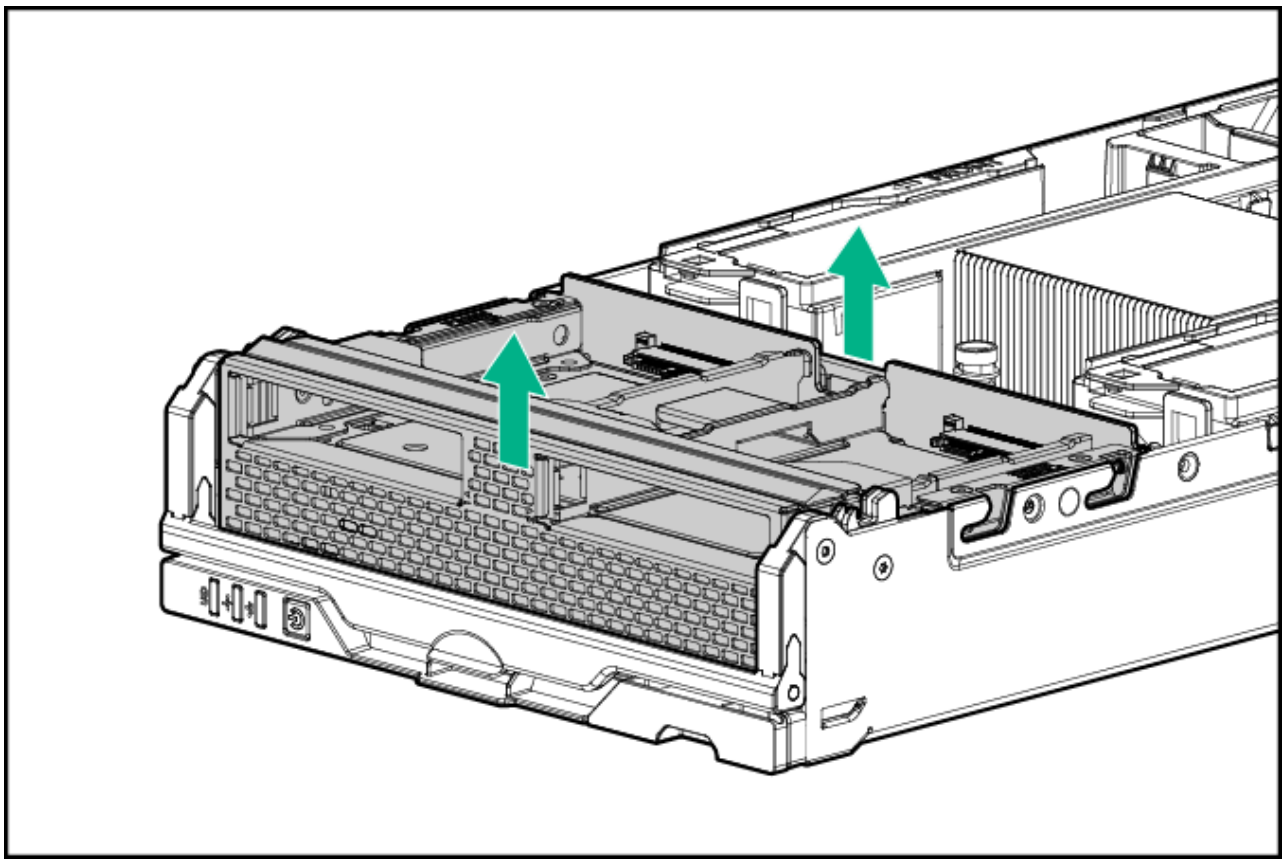

Installing the compute module end cap

Procedure

1. Place the compute module on a flat, level work surface.
2. Install the compute module end cap.

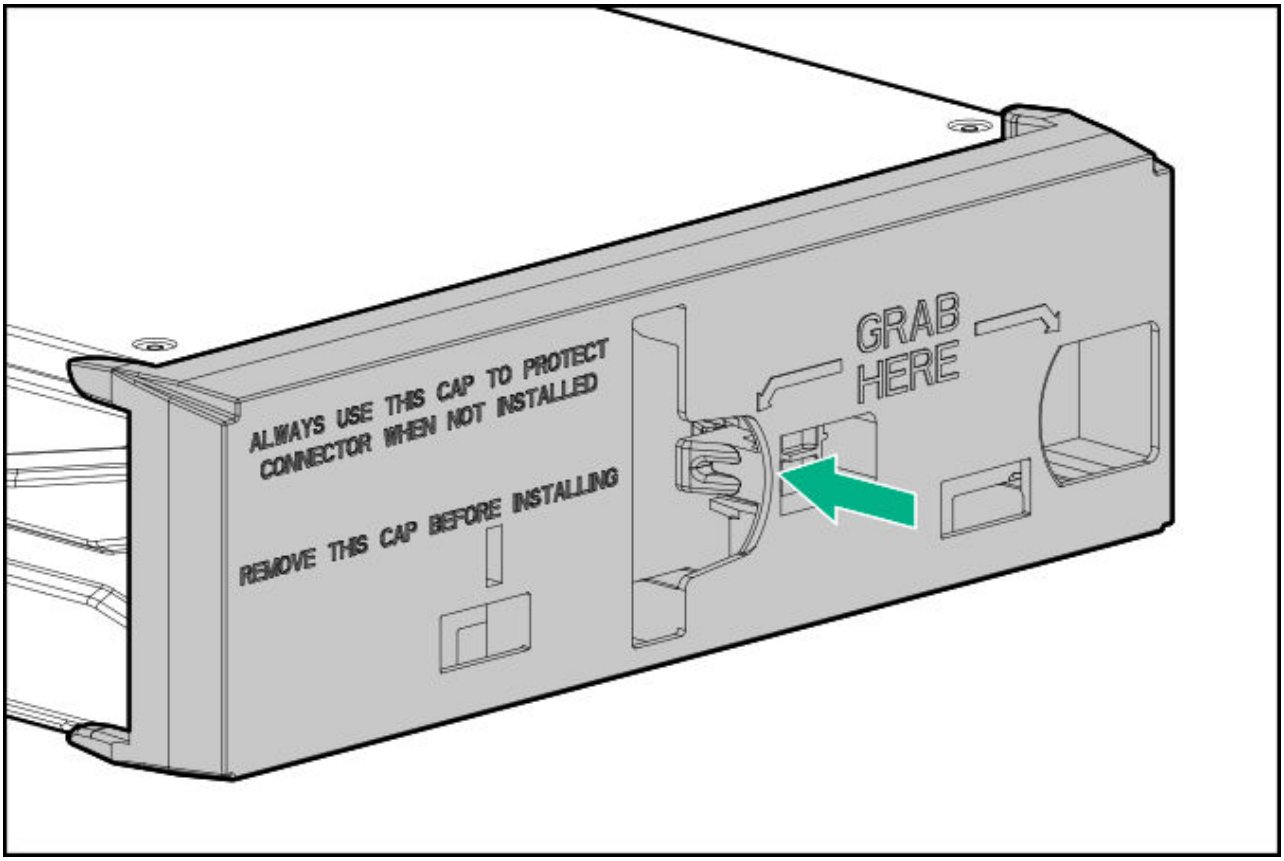

Installing the access panel

Procedure

1. Place the access panel on top of the compute module.
2. Slide the access panel forward until it clicks into place.

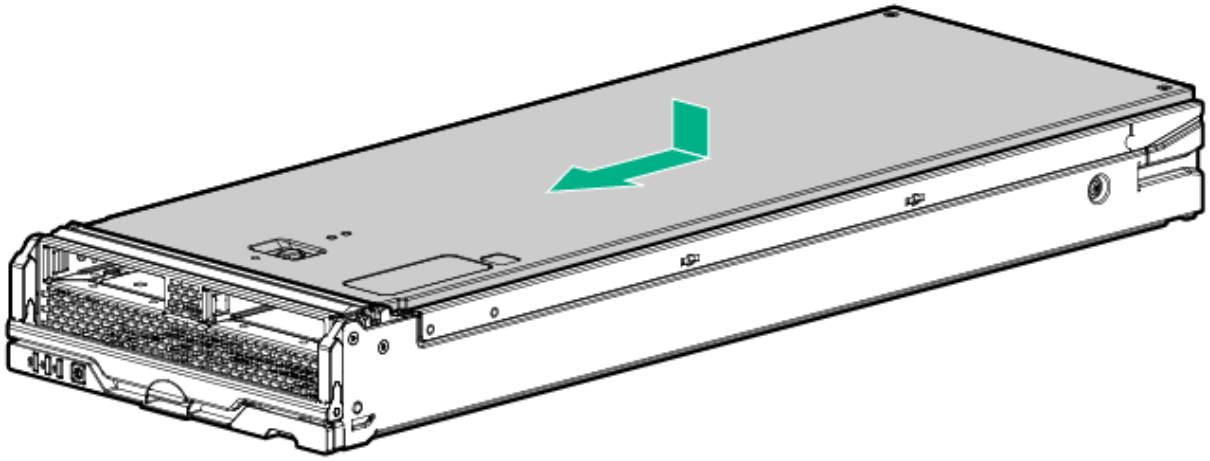

Installing the DIMM baffle

Procedure

1. Install the DIMM baffle.

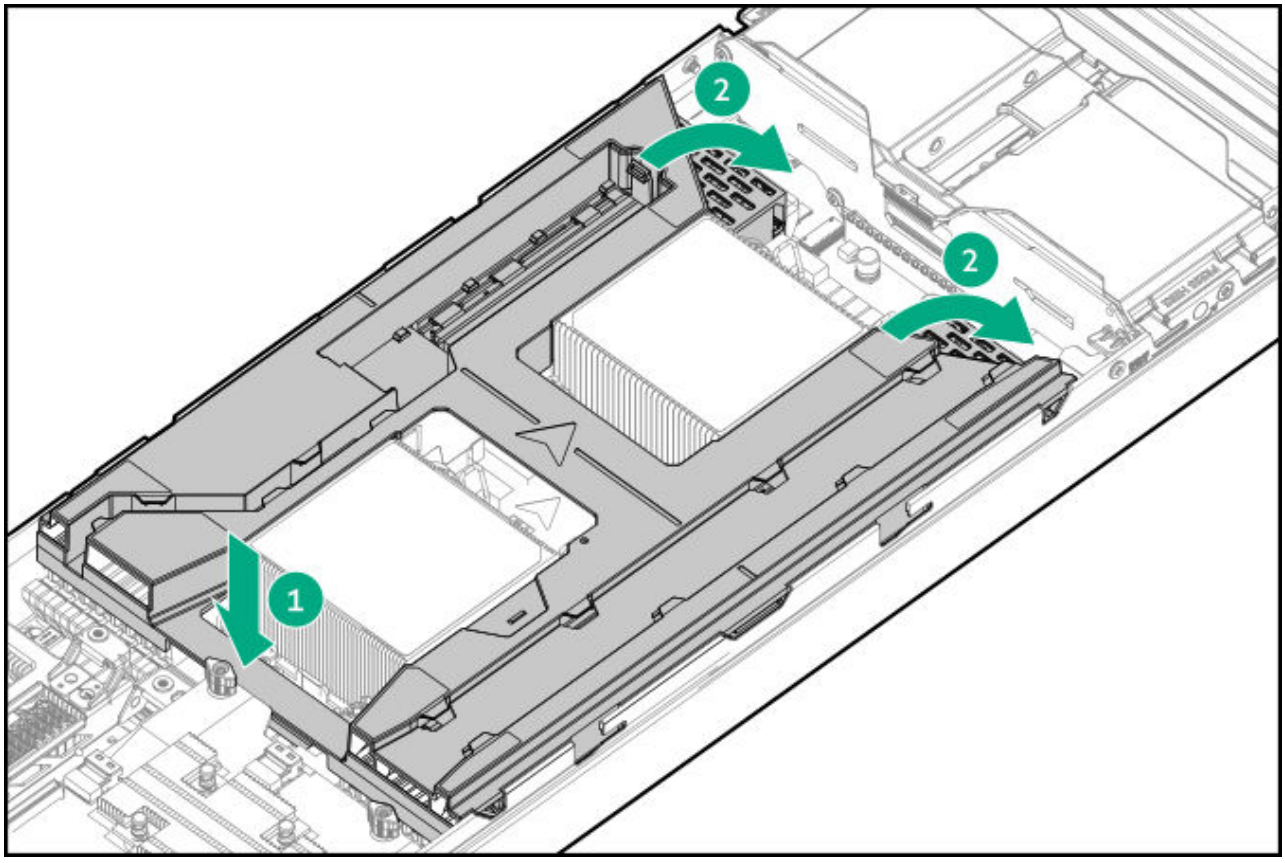

2. If a SLIM/SAS cable is present, attach the SLIM/SAS cable to the DIMM baffle. Attach the SLIM/SAS cable to the Port 3i connector if it is not already attached.

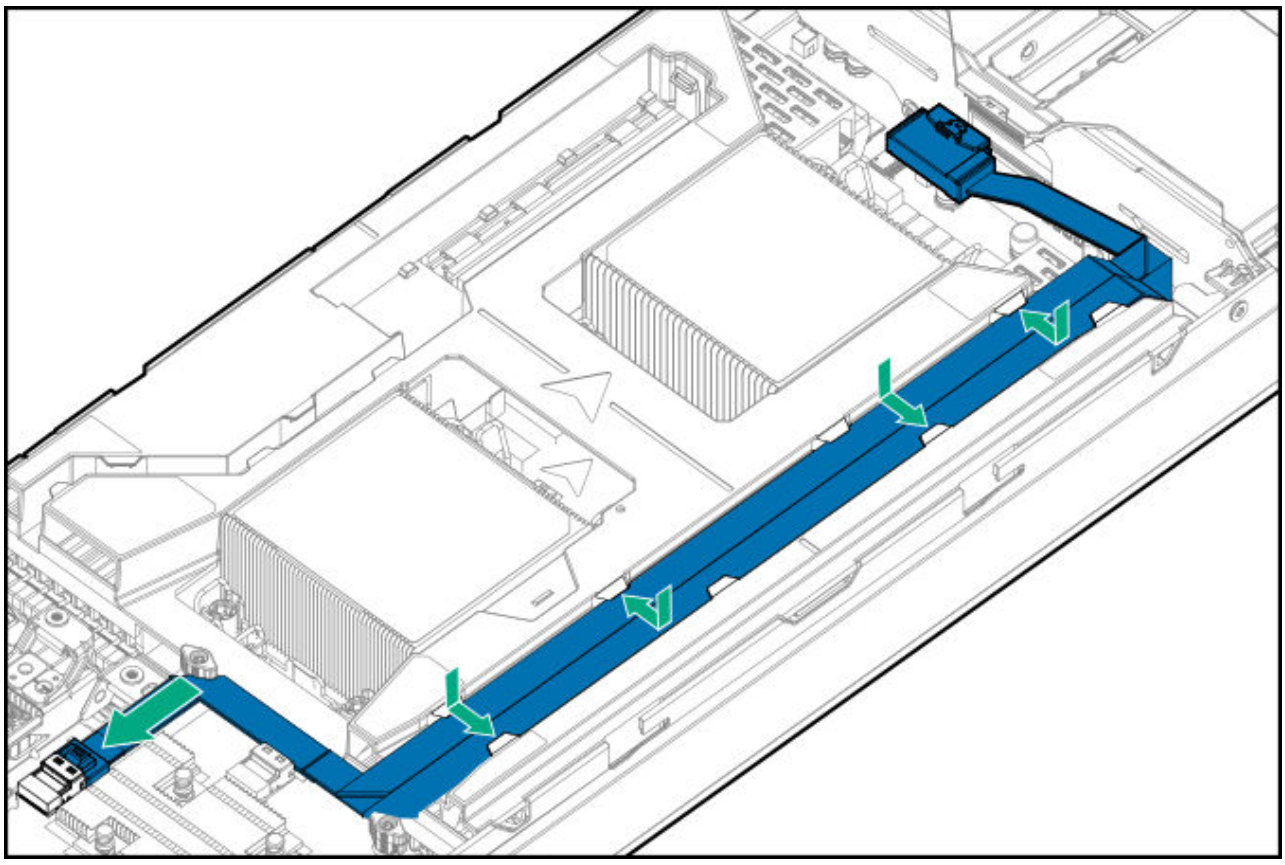

3. If a SLIM/SAS cable is present, attach the SLIM/SAS cable to the drive assembly.

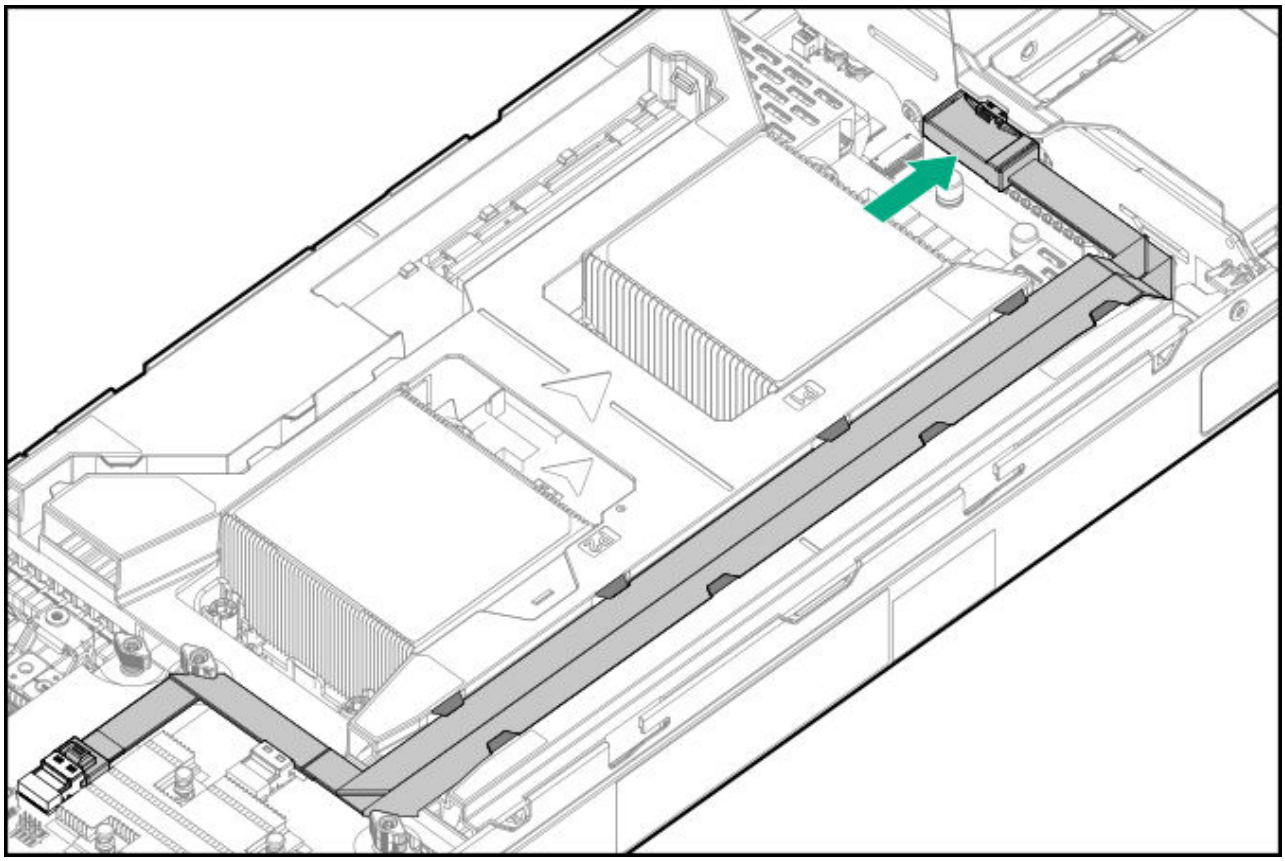

4. If the energy pack was removed, install the energy battery pack into the DIMM baffle.

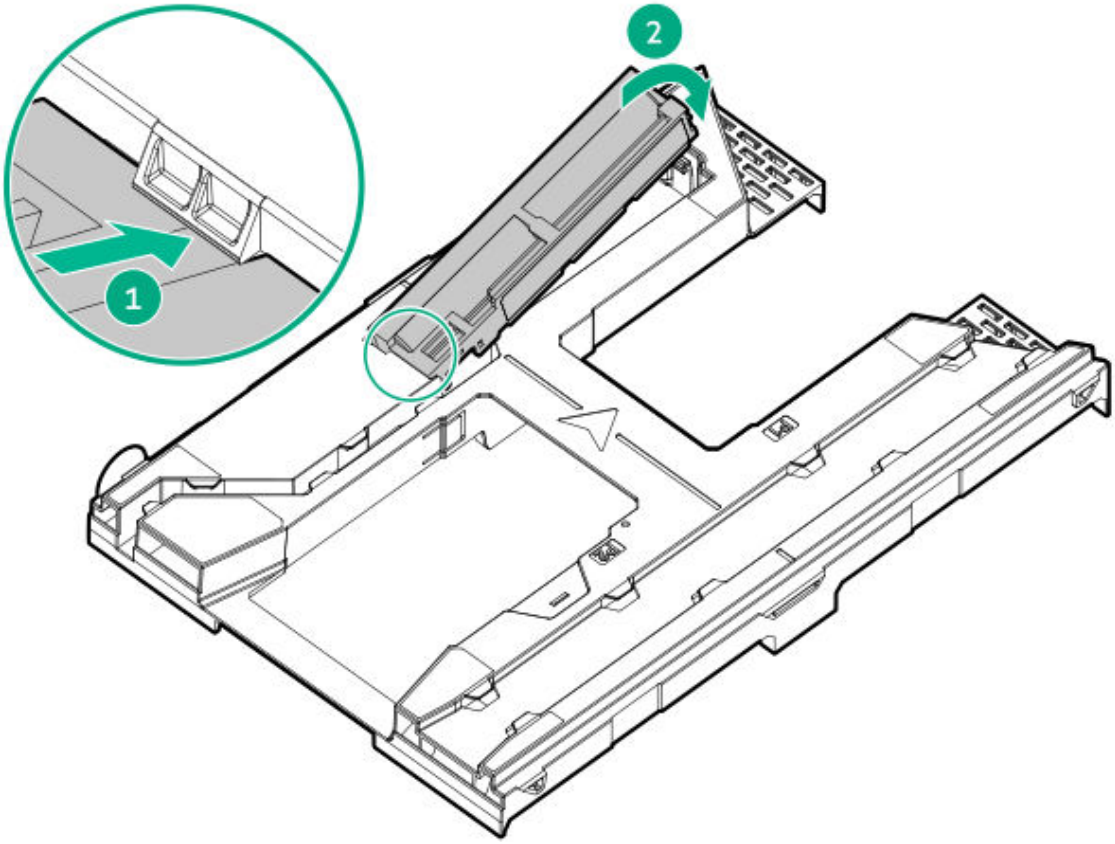

5. If the plug for the energy pack was removed, plug in the cable for the energy pack.

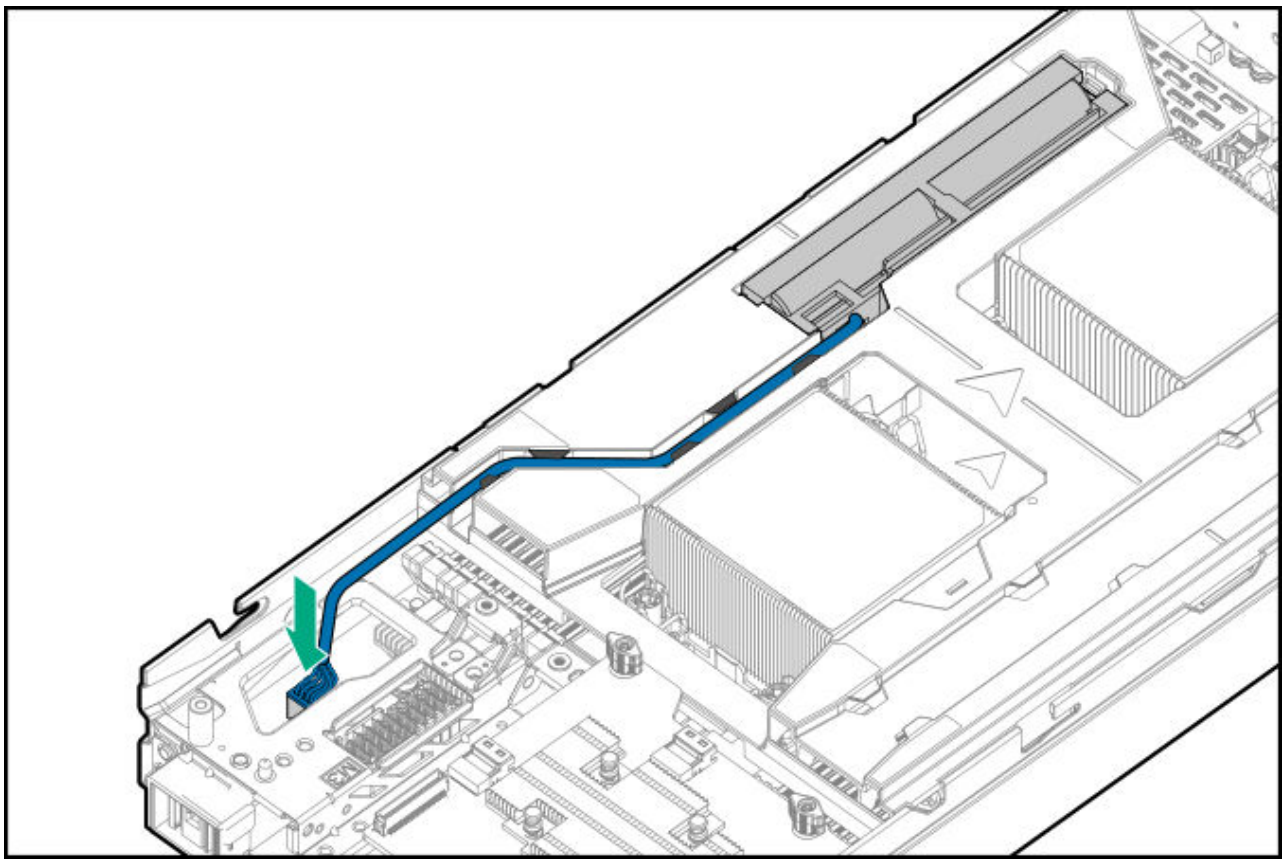

NOTE: Connect the energy pack cable into the port located under the mezzanine 3 option card.

6. If the mezzanine option card was previously removed, install the mezzanine option card.

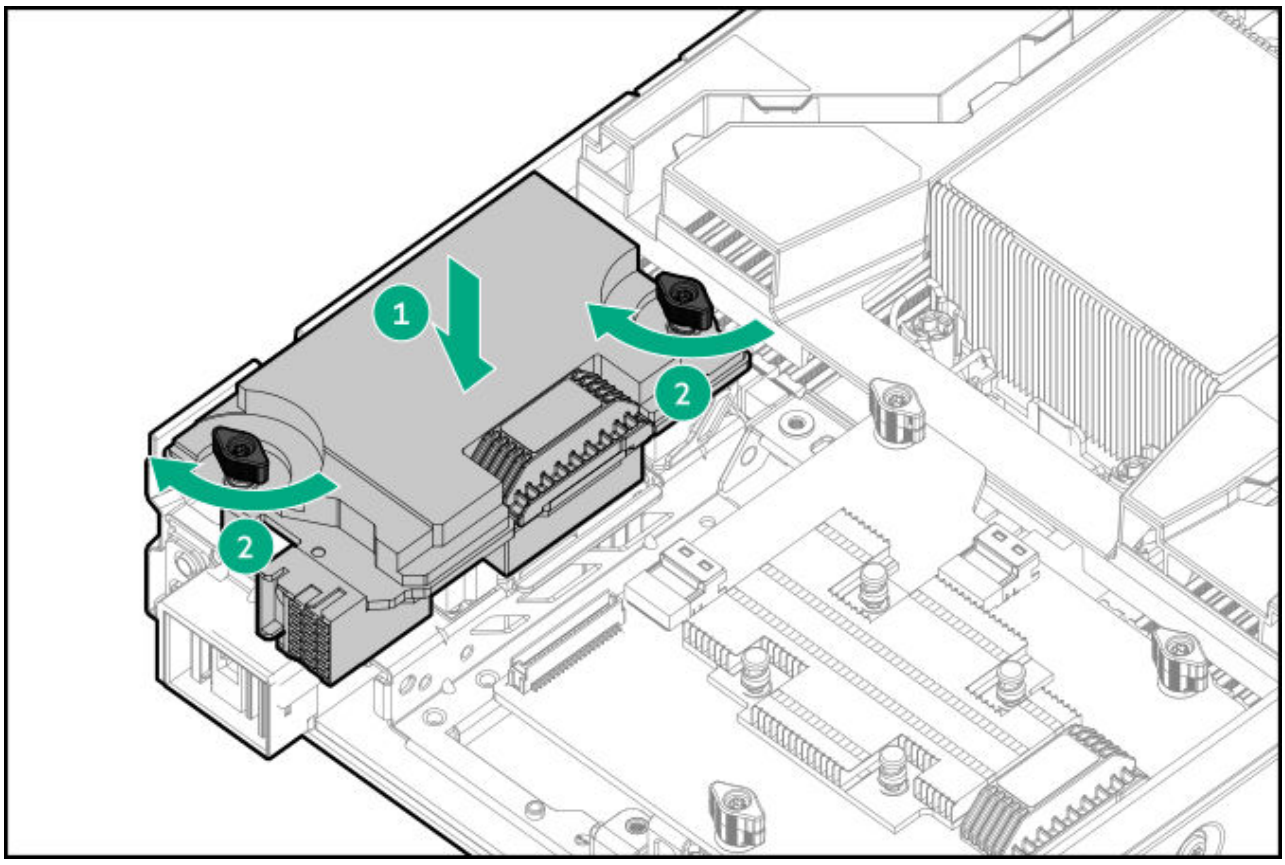

7. Install the access panel.
8. Install the compute module.

Setup

Subtopics

Installation overview
Installing the compute module
Completing the configuration

Installation overview

About this task

Use this section and the following procedure to install the HPE Synergy 480 Gen10 Plus Compute Module in a frame for the first time.

Procedure

1. Install supported options for the compute module.
2. Install the compute module.
3. Complete the compute module configuration.

Installing the compute module

Procedure

1. Verify that the device bay is configured for a half-height compute module. For more information, see the setup and installation guide for the frame on the **Hewlett Packard Enterprise website**.
2. Remove the compute module end cap.

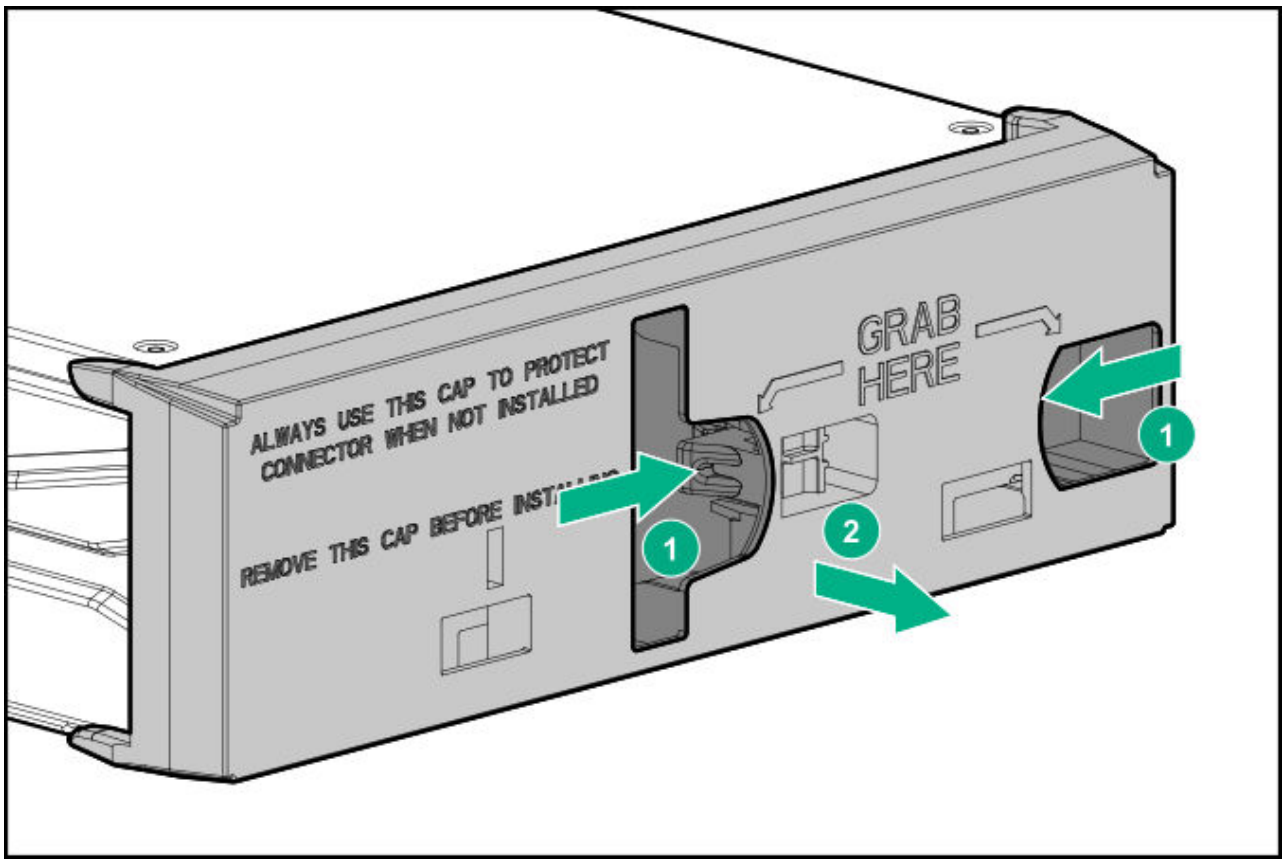

3. Open the compute module handle.
4. Slide the compute module into the enclosure slot until it is fully inserted. Rotate the handle until it latches.

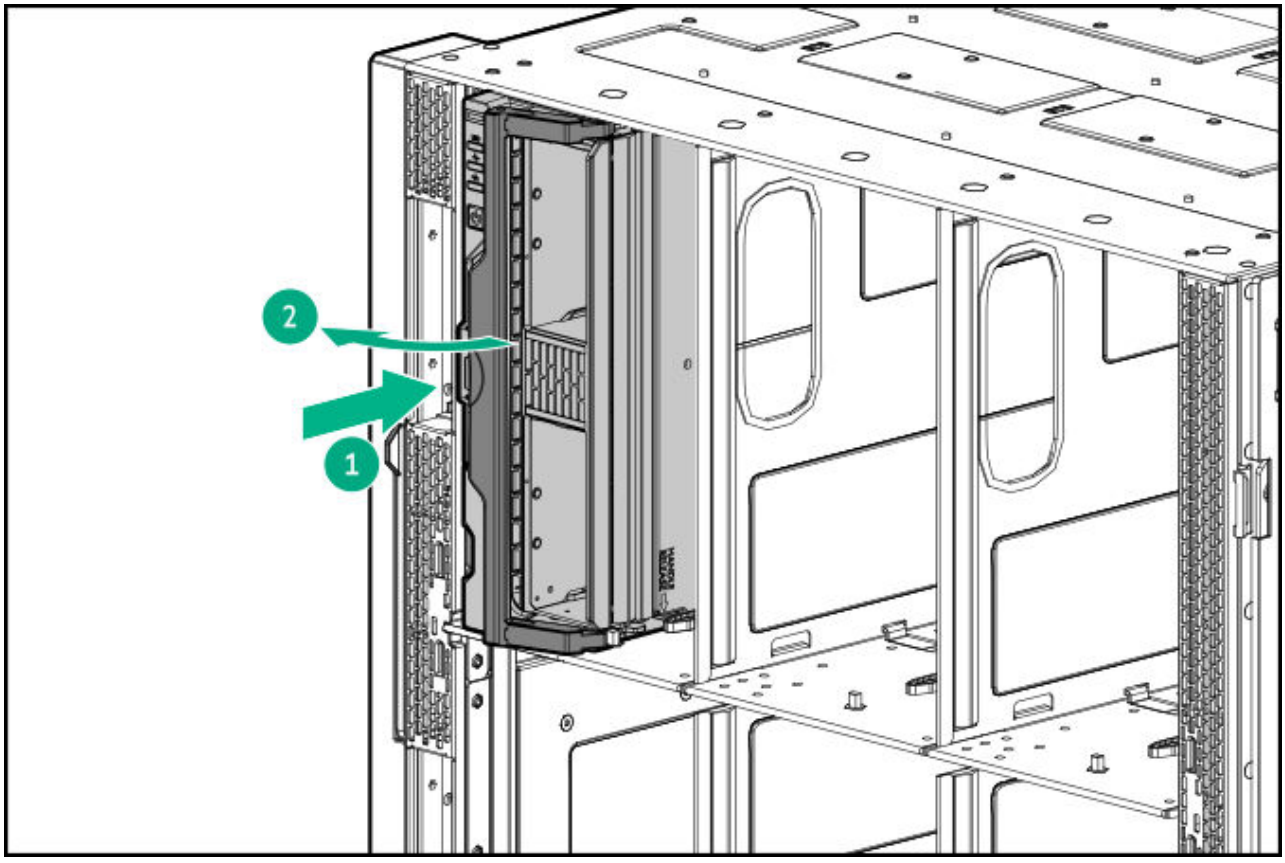

5. Review the compute module front panel LEDs to determine the compute module status. For more information on the compute module LEDs, see "Component identification."

Results

To remove the component, reverse the installation procedure.

CAUTION:

Before removing the compute module, be sure to verify that the compute module is in standby mode by observing that the system power LED is amber. Also, verify that the UID LED is not flashing blue.

Completing the configuration

About this task

When a compute module is added to an existing configuration, HPE OneView automatically detects the new hardware. HPE OneView is hosted on the HPE Synergy Composer appliance installed in the HPE Synergy 12000 Frame. You can use HPE OneView to comprehensively manage an HPE Synergy system throughout the hardware life cycle.

To configure the compute module for the first time, log in to HPE OneView from the frame using your assigned user name and password. For more information, see the HPE Synergy 12000 Frame Setup and Installation Guide (**https://www.hpe.com/info/synergy-12000-frame-docs**). For more information about HPE OneView, see the HPE OneView User Guide for HPE Synergy (**https://www.hpe.com/info/synergy-docs**).

Hardware options installation

To view the warranty for your HPE Synergy 480 Gen10 Plus Compute Module and supported options, see .

Subtopics

Introduction
Installing SAS, SATA, or solid state drives
Installing the SFF flash adapter option
Installing the M.2 SSD flash drive and adapter board
Installation options for front drive cages
Installing the storage controller option
Installing mezzanine card options
Installing the P416ie-m controller mezzanine option
HPE Smart Storage Battery
HPE Smart Storage Hybrid Capacitor
Memory options
HPE Trusted Platform Module 2.0 guidelines
Retaining the BitLocker recovery key/password

Introduction

If more than one option is being installed, read the installation instructions for all the hardware options and identify similar steps to streamline the installation process.

WARNING: To reduce the risk of personal injury from hot surfaces, allow the drives and the internal system components to cool before touching them.

CAUTION: To prevent damage to electrical components, properly ground the compute module before beginning any installation procedure. Improper grounding can cause electrostatic discharge.

Installing SAS, SATA, or solid state drives

Procedure

1. Remove the drive blank.
2. Prepare the drive.

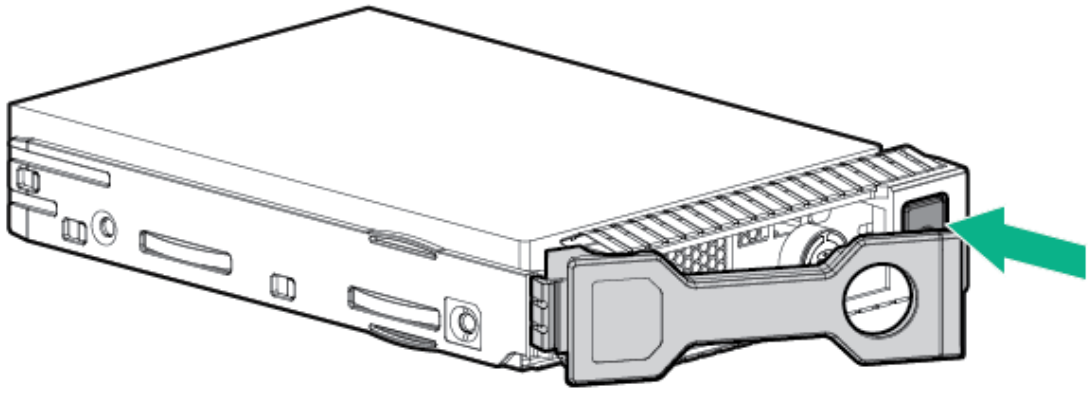

3. Install the drive.

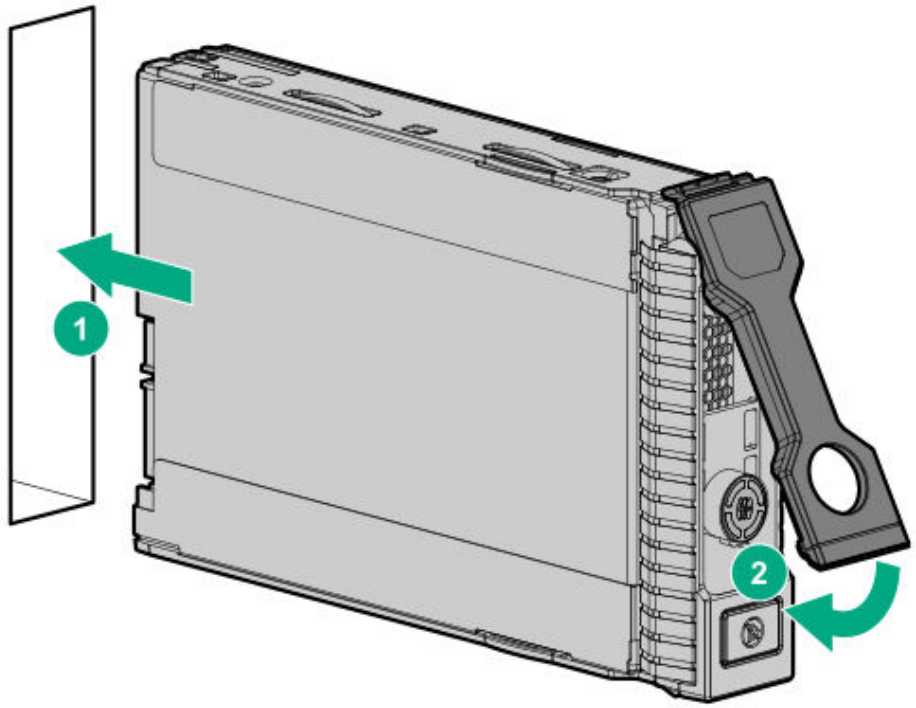

4. Determine the status of the drive from the drive LED definitions.

Installing the SFF flash adapter option

About this task

CAUTION: To prevent improper cooling and thermal damage, do not operate the compute module or the enclosure unless all drive and device bays are populated with either a component or a blank.

Prerequisites

The SFF flash adapter option is supported when any of the following components are installed:

- HPE Smart Array E208i-c/P204i-c with the standard backplane
- Gen10 SATA Board Kit with the standard backplane
- Microchip SmartRAID P416ie-m with the premium backplane and HPE SY480 Gen10+ SlimSAS Cable Option Kit
- HPE SY480 Gen10+ 4SFF Direct Cable Option Kit with the premium backplane

Procedure

1. Remove the drive blank.
2. Install the uFF drives in the SFF flash adapter.

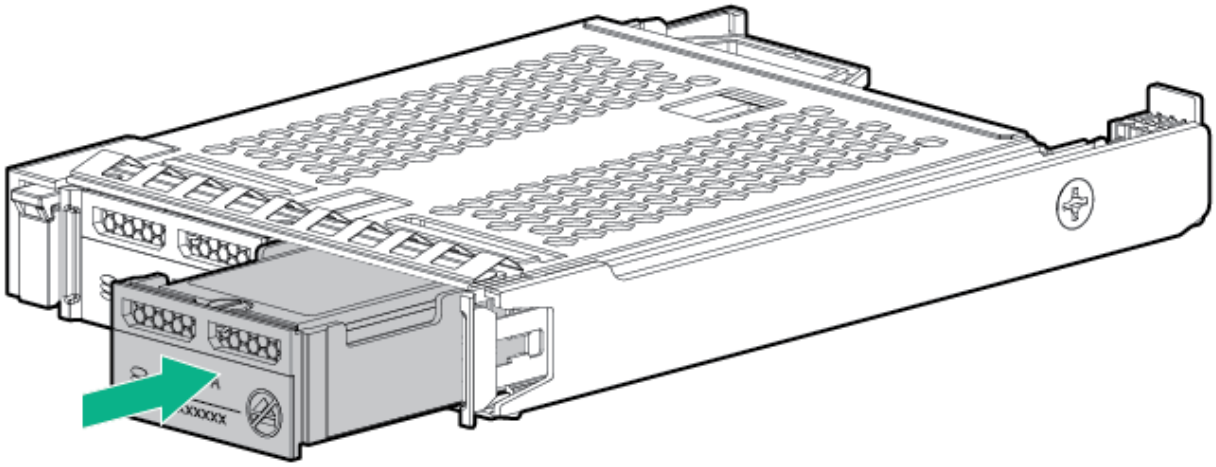

3. Install the SFF flash adapter by pushing firmly near the left-side adapter ejection handle until the latching spring engages in the drive bay.

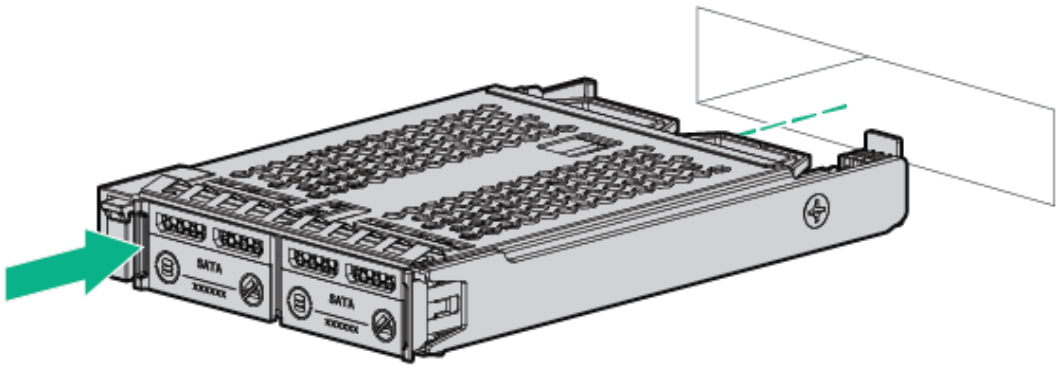

Installing the M.2 SSD flash drive and adapter board

Procedure

1. Power down the compute module.
2. Remove the compute module.
3. Lay the compute module on a flat and level surface.
4. Remove the access panel.
5. Remove the drive cage.
6. Locate the SSD adapter board, and install SSD flash drive onto the adapter card.

> **IMPORTANT:**
>
> Install the SSD flash drive into the connector at an angle first, and then lower it down onto the adapter card mounting standoffs to ensure proper installation.

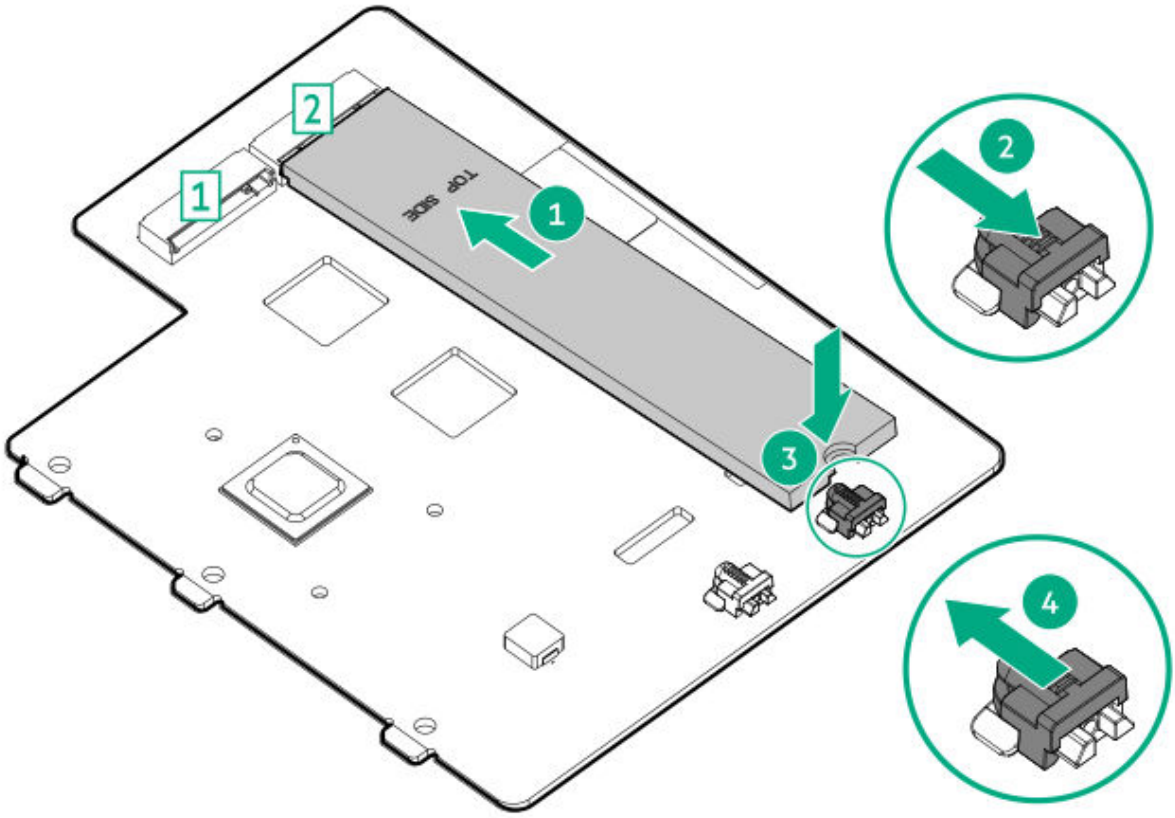

7. Install the SSD flash drive to the SSD adapter board at an angle. Then, press down the SSD flash drive where indicated. Secure the SSD flash drive to the adapter board by latching the SSD flash drive into the adapter board standoff.
8. Repeat the SSD flash drive installation on the second SSD flash drive, as applicable.
9. Install the SSD adapter board onto the compute module system board.
    a. Install the SSD adapter board to the system board adapter housing at an angle. Make sure that you align the adapter card edges to the edge slots and the alignment pins near the front of the compute module.

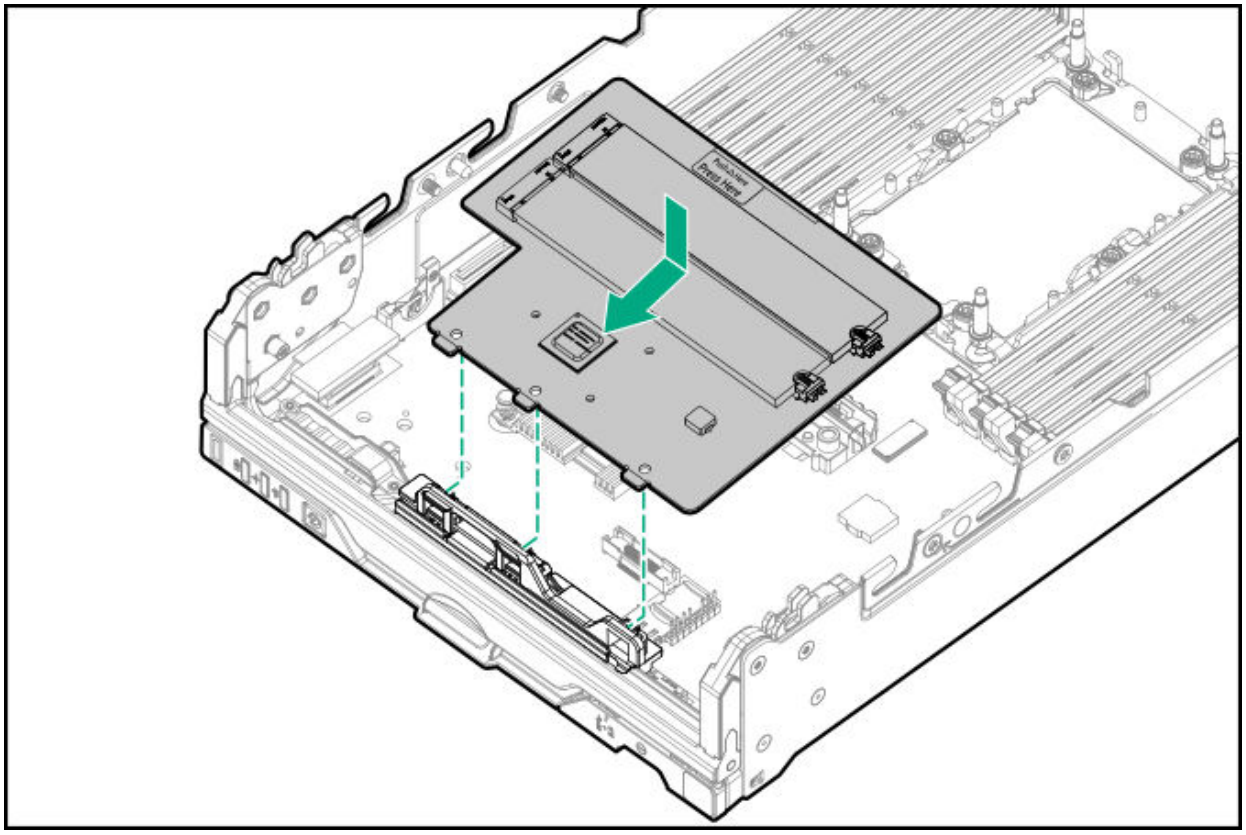

    b. Press down where indicated on the adapter board to lower it down onto the system board connector until it is fully engaged. The adapter board clicks into place when fully engaged.

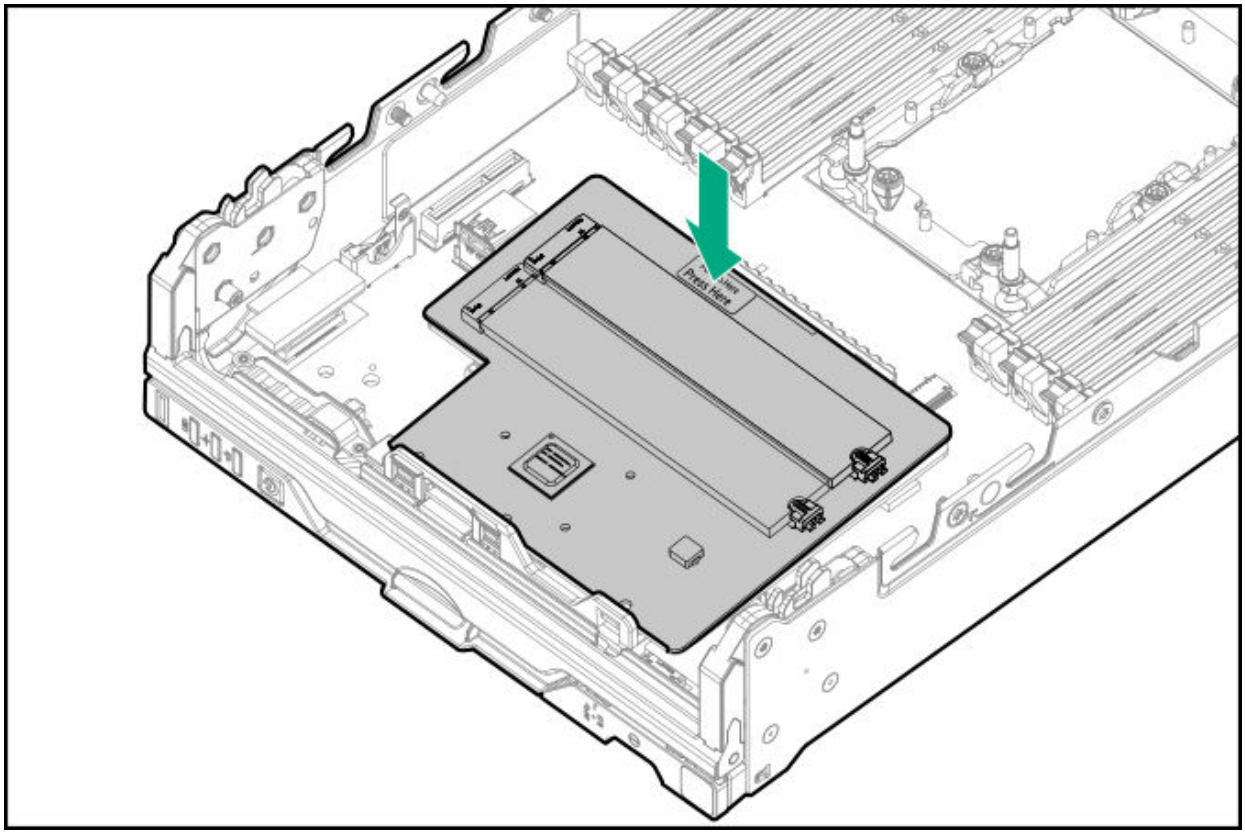

Installation options for front drive cages

- Driveless kit
- Standard two drive kit
- Front PCIe accelerator kit
- Premium four-drive kits:
  - Two SAS/SATA drives and two NVMe drives
  - Four NVMe drives

NOTE: The drives shown in the procedures may appear slightly different from what you have.

Subtopics

Installing the driveless cage kit
Installing the standard two-drive kit

Installing the front PCIe accelerator enablement kit
Installing the premium four-drive kit for two SAS/SATA and two NVMe drives
Installing the premium four-drive kit for four NVMe drives

Installing the driveless cage kit

Procedure

1. Power down the compute module.
2. Remove the compute module from the frame.
3. Place the compute module on a flat, level work surface.
4. Remove the access panel.
5. Install the driveless cage.



NOTE:

- If a drive cage is present, disconnect and remove the drive cage.
- The driveless cage does not require cabling.

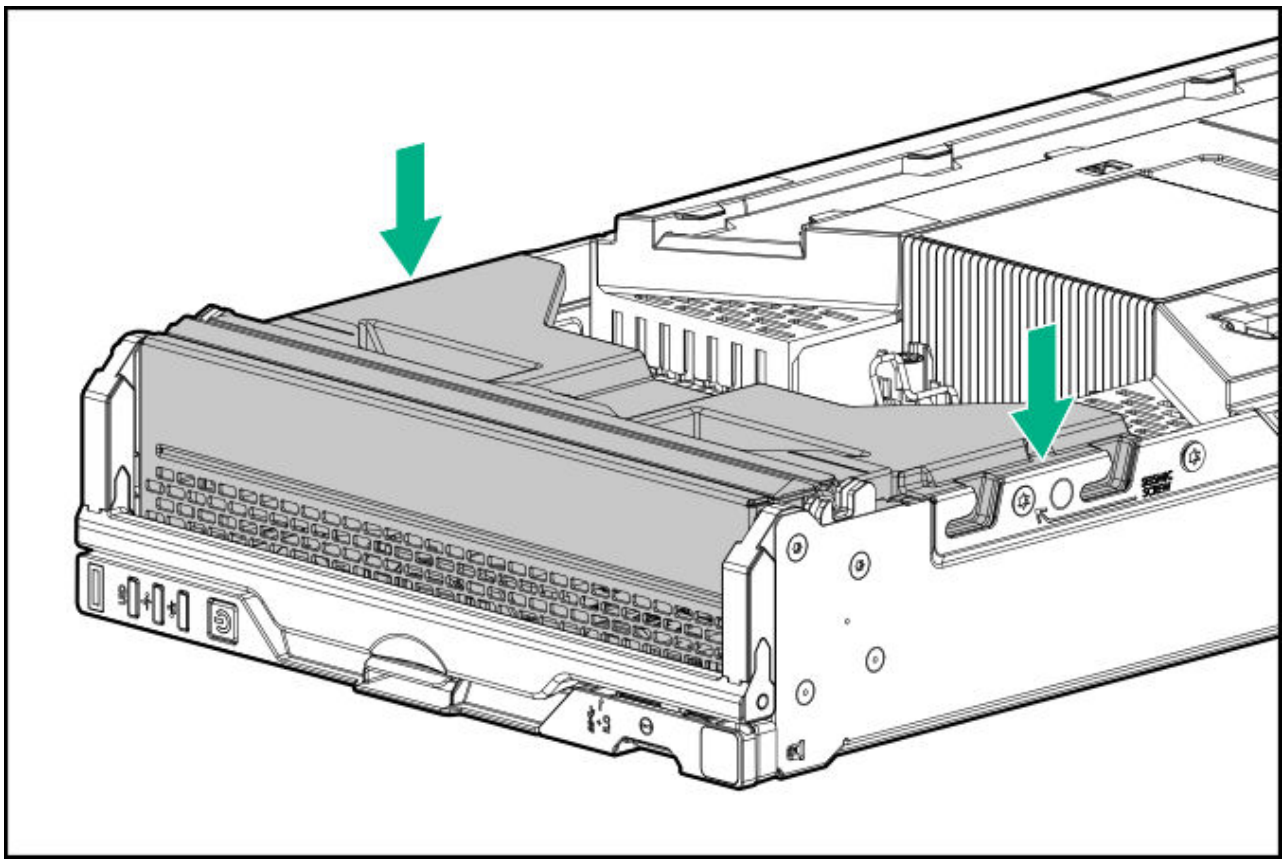

6. Install the access panel.
7. Install the compute module.
8. Power on the compute module.

Installing the standard two-drive kit

Procedure

1. Power down the compute module.
2. Remove the compute module from the frame.
3. Place the compute module on a flat, level work surface.
4. Remove the access panel.

5. Install the front drive cage.

> **NOTE:**
>
> - If a drive cage is present, disconnect and remove the drive cage.
> - No cabling is required for the two-drive kit.

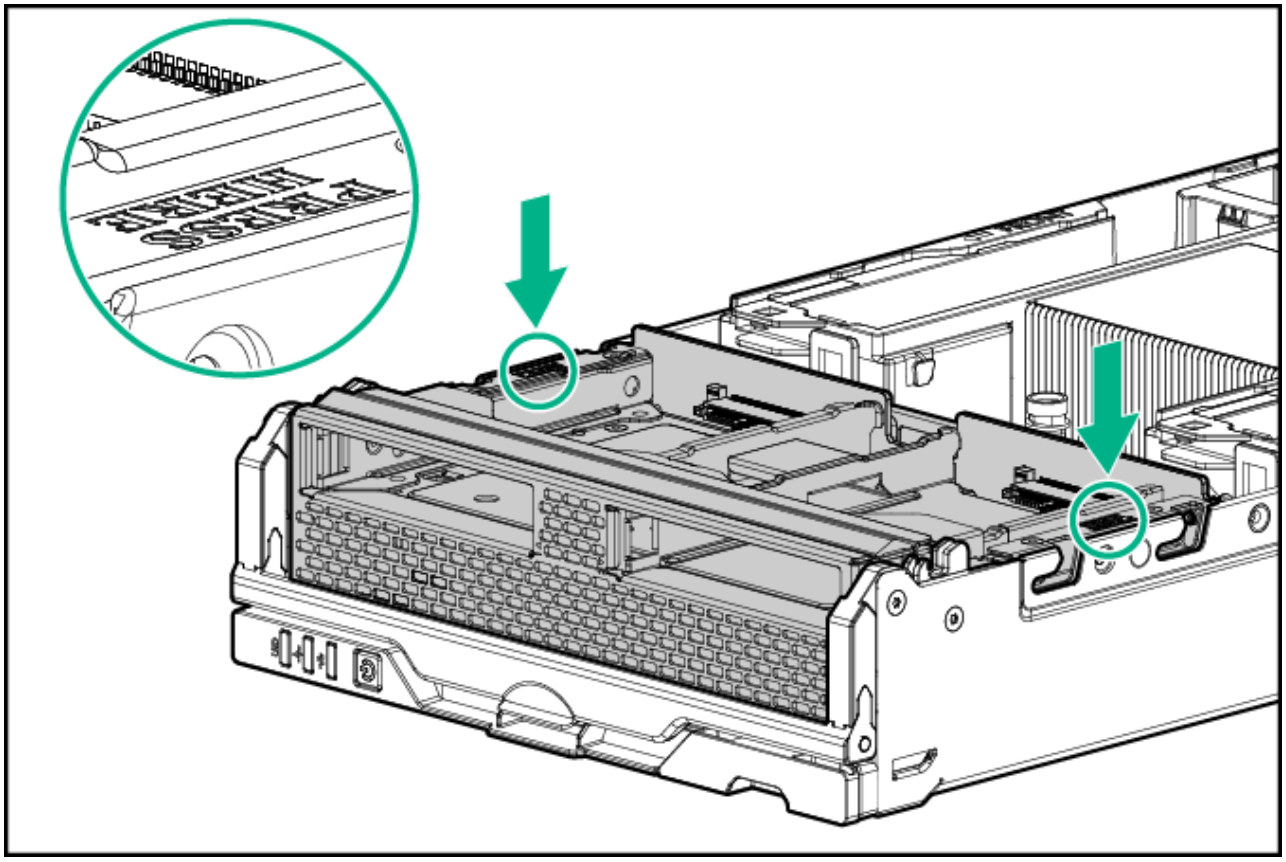

6. Install the drives.
7. Install the access panel.
8. Install the compute module.
9. Power on the compute module.

Installing the front PCIe accelerator enablement kit

Procedure

1. Power down the compute module.
2. Remove the compute module from the frame.
3. Place the compute module on a flat, level work surface.
4. Remove the access panel.
5. Insert the peg of the direct connect cable into the slot on the side of the front PCIe accelerator enablement kit. Then, rotate the cable upward until it clicks into the post. Finally, connect the cable to the drive assembly.

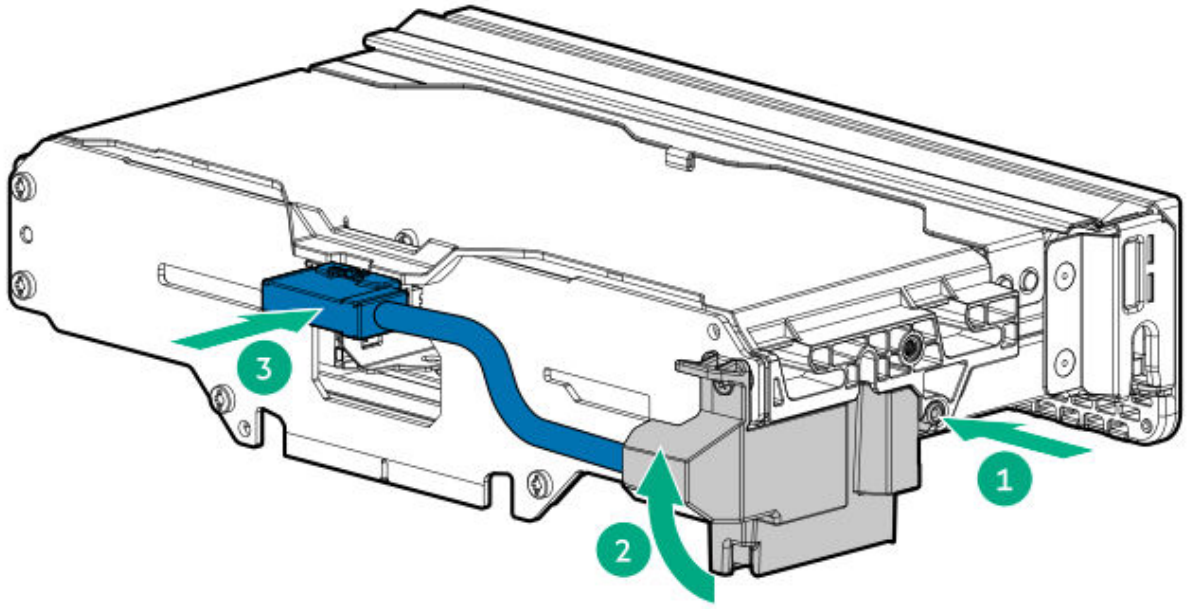

6. Install the front drive cage.

> **NOTE:**
>
> If a drive cage is present, disconnect and remove the drive cage.

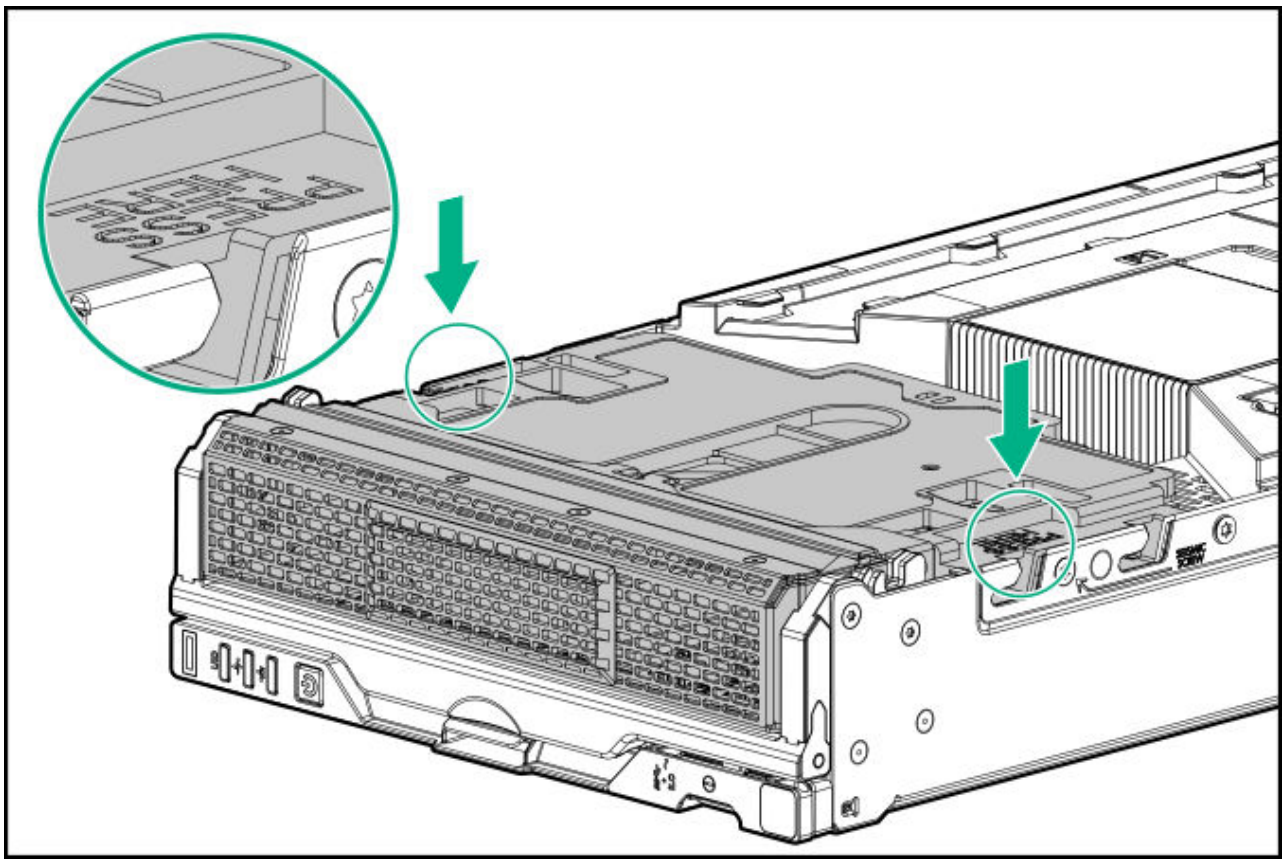

7. Install the access panel.
8. Install the compute module.
9. Power on the compute module.

Installing the premium four-drive kit for two SAS/SATA and two NVMe drives

Procedure

1. Power down the compute module.
2. Remove the compute module from the frame.
3. Place the compute module on a flat, level work surface.
4. Remove the access panel.

5. Install the front drive cage.

> **NOTE:**
>
> If a drive cage is present, disconnect and remove the drive cage.

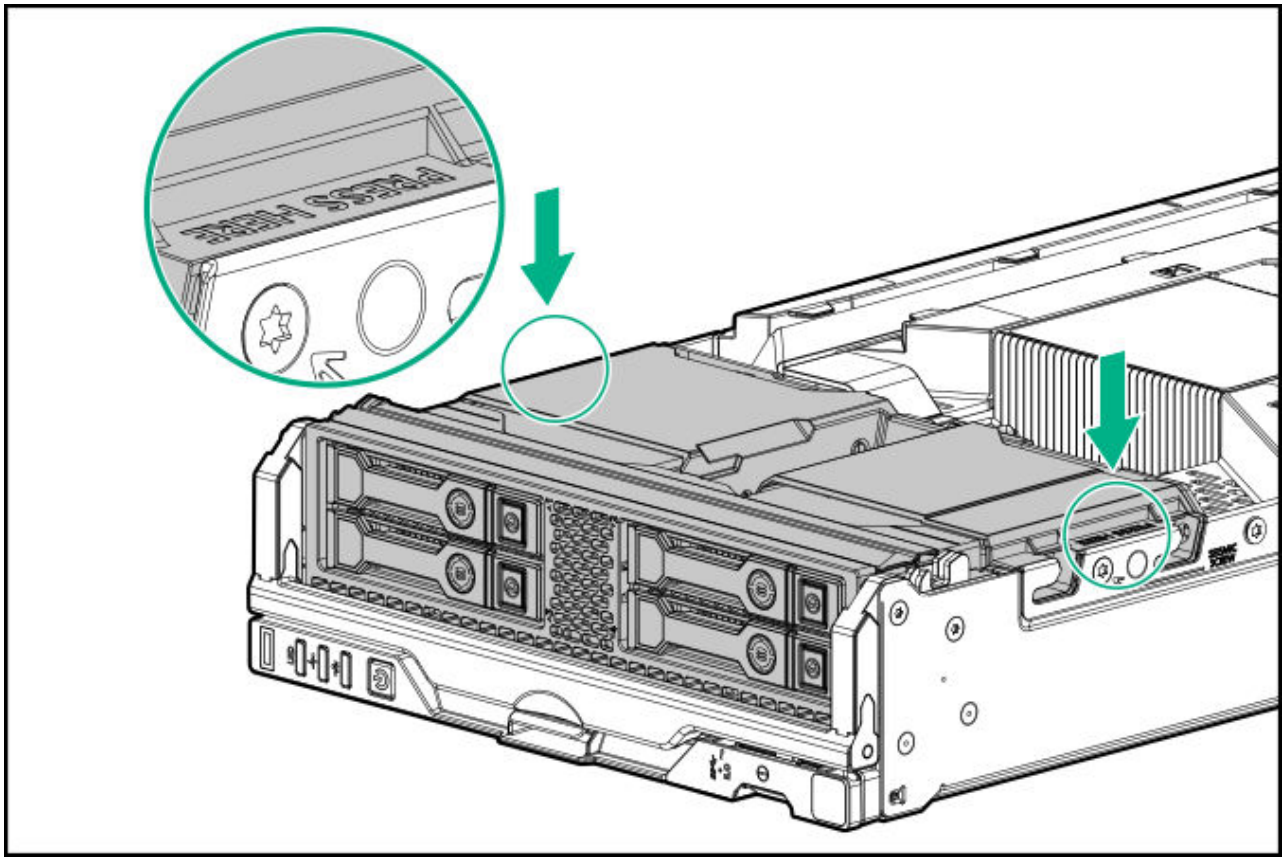

6. Install the drives.
7. Connect the SLIM/SAS cable to the Port 3i connector and to the drive assembly.

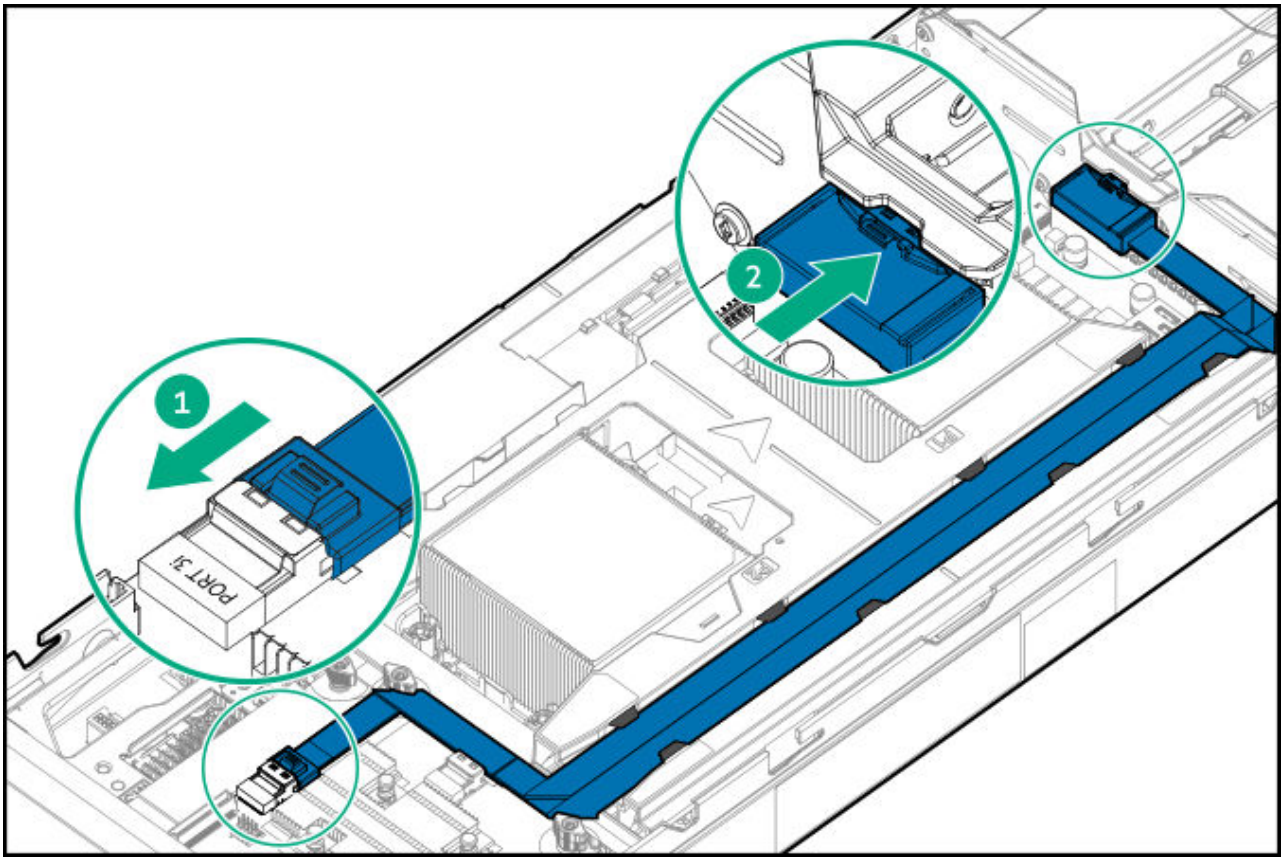

8. Install the access panel.
9. Install the compute module.
10. Power on the compute module.

Installing the premium four-drive kit for four NVMe drives

Procedure

1. Power down the compute module.
2. Remove the compute module from the frame.
3. Place the compute module on a flat, level work surface.
4. Remove the access panel.
5. Insert the peg of the direct connect cable into the slot on the side of the four-drive cage. Then, rotate the cable upward until it clicks into the post. Finally, connect the cable to the drive assembly.

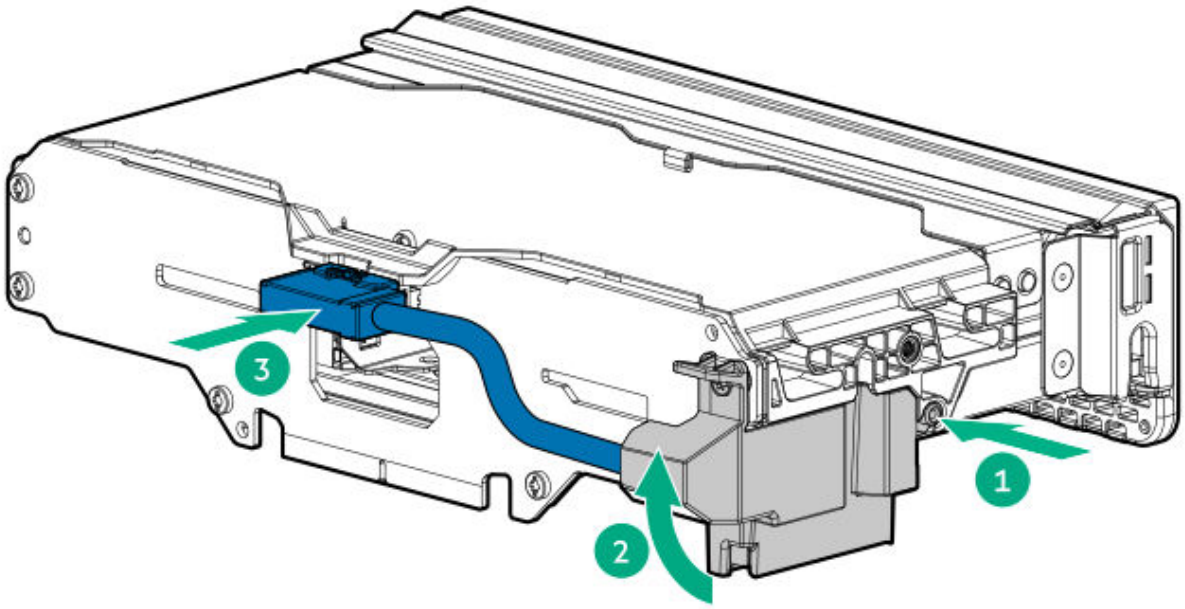

6. Install the front drive cage.

NOTE:

If a drive cage is present, disconnect and remove the drive cage.

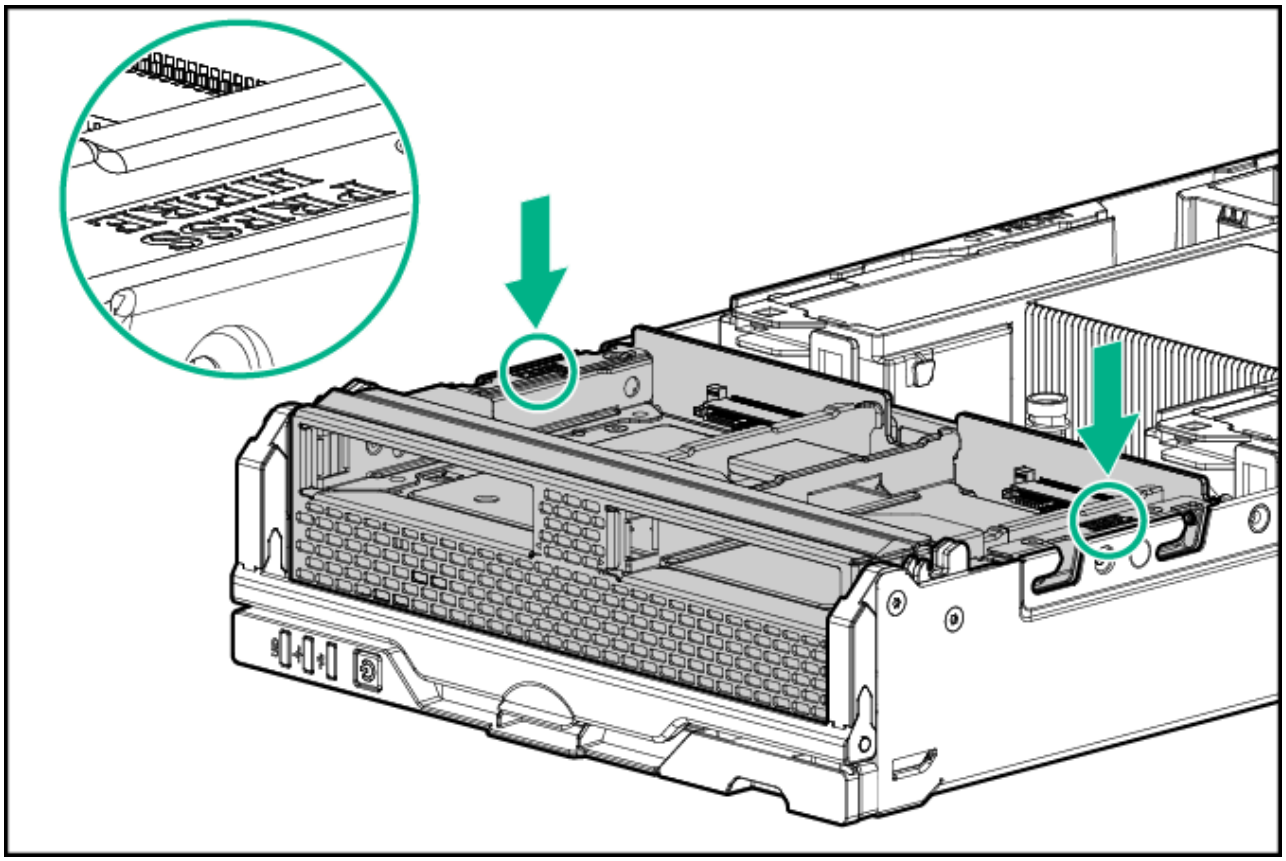

7. Install the drives.
8. Install the access panel.
9. Install the compute module.
10. Power on the compute module.

Installing the storage controller option

About this task

This procedure applies only to the two-drive kit. For more information about supported options, see the product QuickSpecs on the **Hewlett Packard Enterprise website**.

> **CAUTION:** Hewlett Packard Enterprise recommends performing a complete backup of all compute module data before installing or removing a controller or adapter.

> **CAUTION:** In systems that use external data storage, be sure that the compute module is the first unit to be powered down and the last to be powered back up. Taking this precaution ensures that the system does not erroneously mark the drives as failed when the compute module is powered up.

Procedure

1. Power down the compute module.
2. Remove the compute module.
3. Remove the access panel.
4. Remove the drive cage.
5. Install the storage controller.

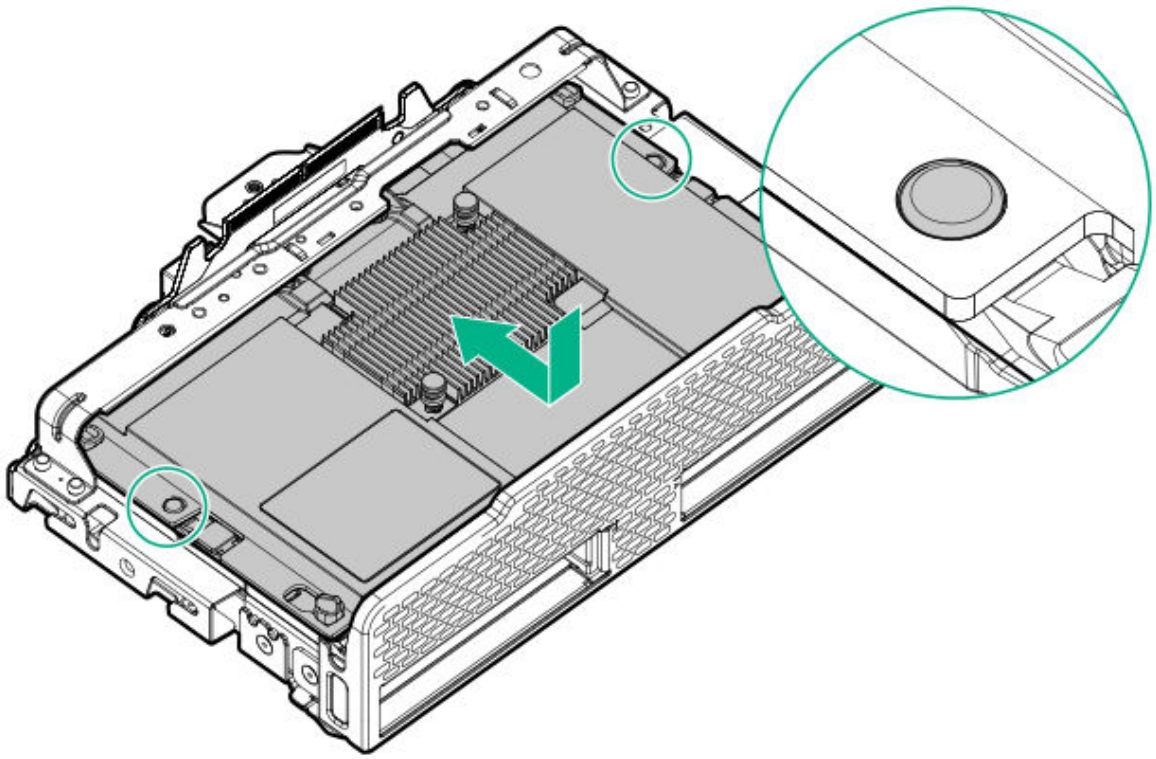

6. Install the drive cage.
7. Install the access panel.
8. Install the compute module.
9. Power up the compute module.

Installing mezzanine card options

About this task

Mezzanine options are classified as Type C and Type D mezzanine cards. The type of mezzanine card determines where the card can be installed in the compute module. Some mezzanine cards require an interconnect module to be installed in the associated ICM bay in the rear of the frame. The location of the mezzanine card determines the location of the interconnect modules.

Be sure to review the mezzanine card-mapping information in the HPE Synergy Configuration and Compatibility Guide at **https://www.hpe.com/info/synergy-configuration-compatibility-en**.

For more information about the association between the mezzanine bay and the interconnect bays, see the HPE Synergy 12000 Frame Setup and Installation Guide on the Hewlett Packard Enterprise website (**https://www.hpe.com/info/synergy-12000-frame-docs**).

Procedure

1. Power down the compute module.
2. Remove the compute module.
3. Place the compute module on a flat, level work surface.
4. Remove the access panel.
5. Locate the appropriate mezzanine connector.

   To locate the connector, see System board components.
6. If installed, remove the mezzanine connector cover.
7. Install the mezzanine card.

   Press firmly on the **PRESS HERE** label above the mezzanine connector to seat the card.

   When a GPU mezzanine adapter is installed in the compute module, an additional mounting bracket is required.

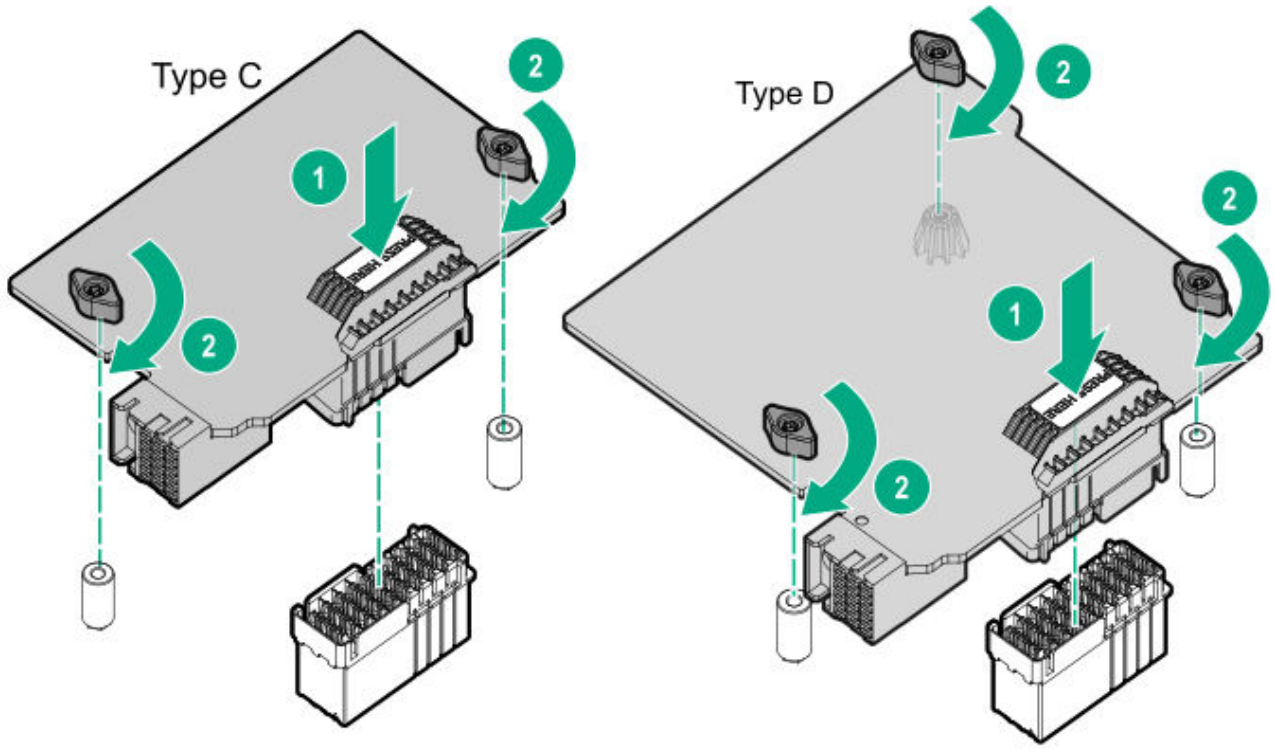

8. Install the access panel.
9. Install the compute module.
10. Power up the compute module.

Installing the P416ie-m controller mezzanine option

About this task

IMPORTANT:

For more information about the association between the mezzanine bay and the interconnect bays, see the HPE Synergy 12000 Frame Setup and Installation Guide in the Hewlett Packard Enterprise Information Library (**https://www.hpe.com/info/synergy-docs**). Where you install the mezzanine card determines where you must install the interconnect modules.

Procedure

1. Power down the compute module.
2. Remove the compute module.
3. Place the compute module on a flat, level work surface.
4. Remove the access panel.
5. Locate the appropriate mezzanine connector. To locate the connector, see System board components.
6. Remove the drive cage.
7. Install the mezzanine card. Press firmly on the **PRESS HERE** label above the mezzanine connector to seat the card.

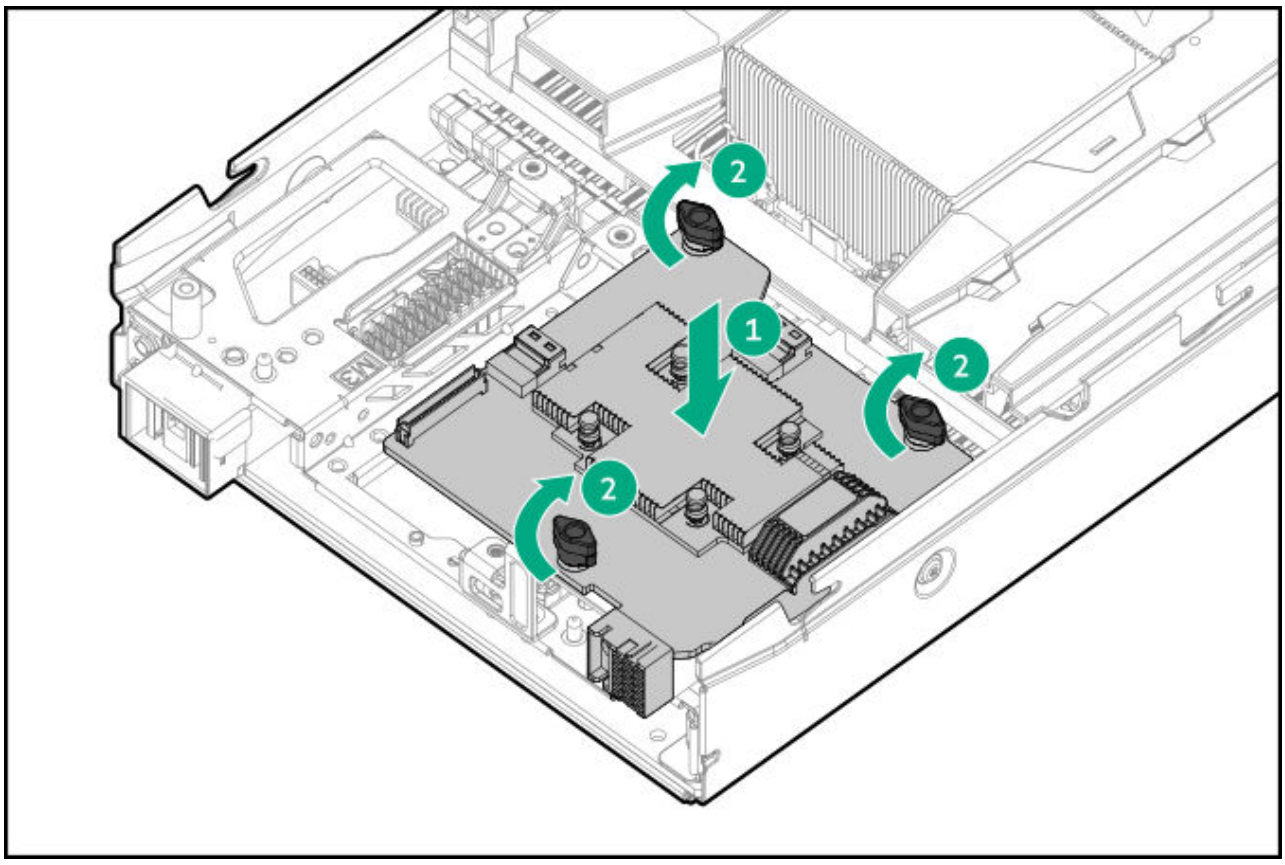

8. If a SLIM/SAS cable is present, install and route the SLIM/SAS cable for the P416ie-m SR Gen10 controller from the drive assembly to the HPE Smart Array P416ie-m Controller Port 3i of the mezzanine card in mezzanine 1.

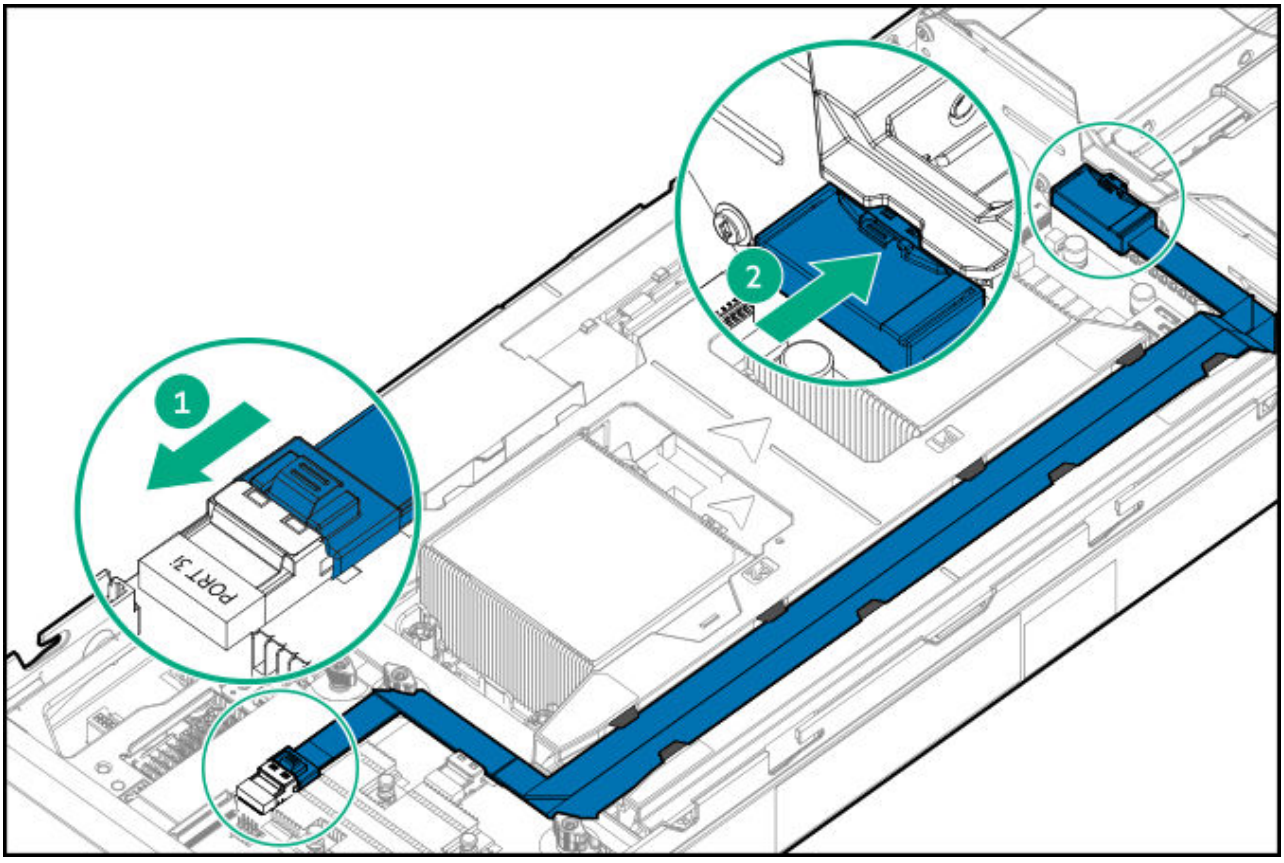

9. Install the access panel.
10. Install the compute module.
11. Power up the compute module.

More information

Mezzanine connector definitions

HPE Smart Storage Battery

The HPE Smart Storage Battery supports the following devices:

- HPE Smart Array SR controllers

A single 96 W battery can support up to 24 devices.

After the battery is installed, it might take up to two hours to charge. Controller features requiring backup power are not re-enabled until the battery is capable of supporting the backup power.

This server supports the 96 W HPE Smart Storage Battery with the 260 mm cable.

HPE Smart Storage Hybrid Capacitor

The HPE Smart Storage Hybrid Capacitor supports the following devices:

- HPE SR controllers

The capacitor pack can support up to two devices.

This server supports the HPE Smart Storage Hybrid Capacitor with the 260 mm cable.

Before installing the HPE Smart Storage Hybrid Capacitor, verify that the system BIOS meets the minimum firmware requirements to support the capacitor pack.

> **IMPORTANT:**
> If the system BIOS or controller firmware is older than the minimum recommended firmware versions, the capacitor pack will only support one device.

The capacitor pack is fully charged after the system boots.

Subtopics

Installing the energy pack option

Installing the energy pack option

About this task

Hewlett Packard Enterprise now offers two options as a centralized backup power source for backing up write cache content on Smart Array controllers if there is an unplanned server power loss.

- HPE Smart Storage Battery
- HPE Smart Storage Hybrid Capacitor

> **IMPORTANT:**
> The HPE Smart Storage Hybrid Capacitor is only supported on HPE Gen10 and later servers.

Only one energy pack is required per server, as it can support multiple devices.

Procedure

1. Power down the compute module.
2. Remove the compute module.
3. Place the compute module on a flat, level work surface.
4. Remove the access panel.
5. Facing the front of the compute module, remove the DIMM baffle from the system board.

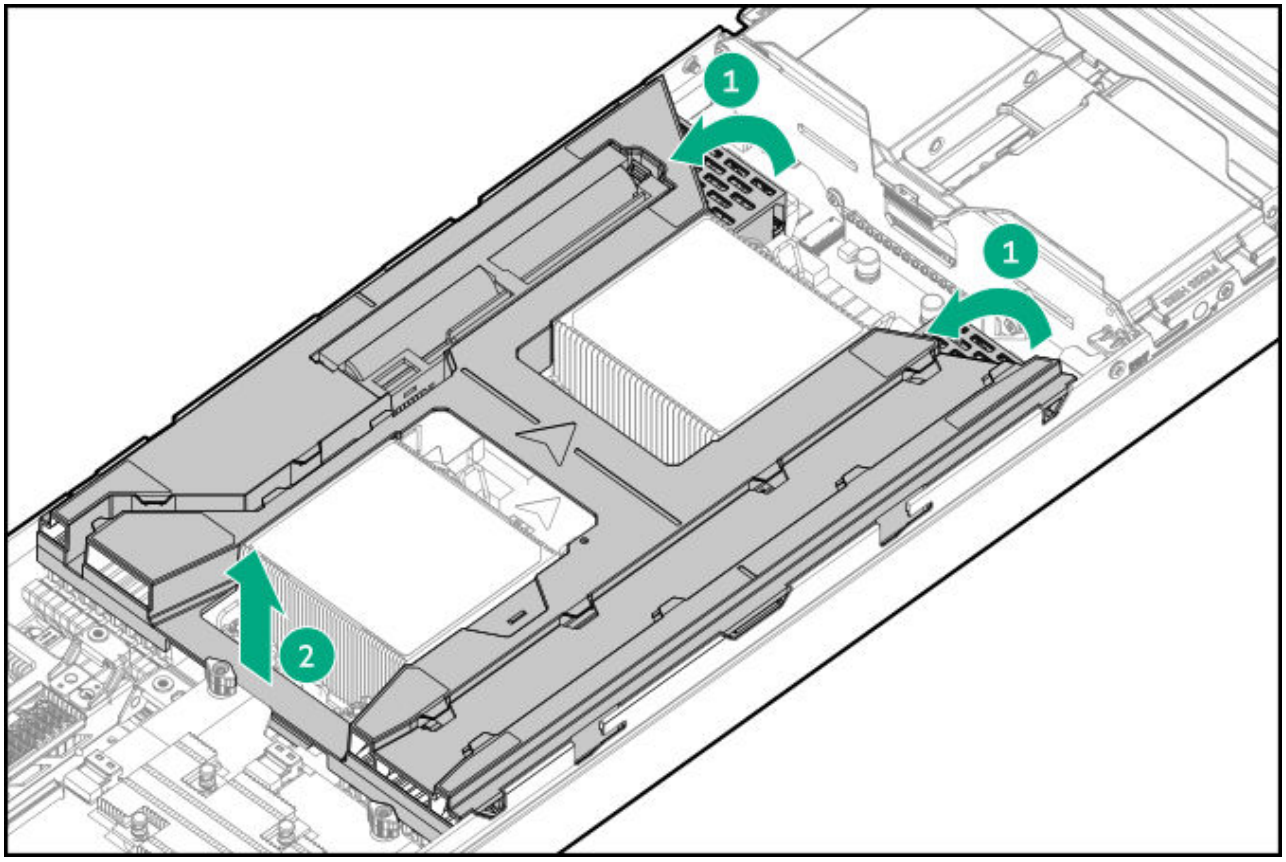

6. Install the energy pack.

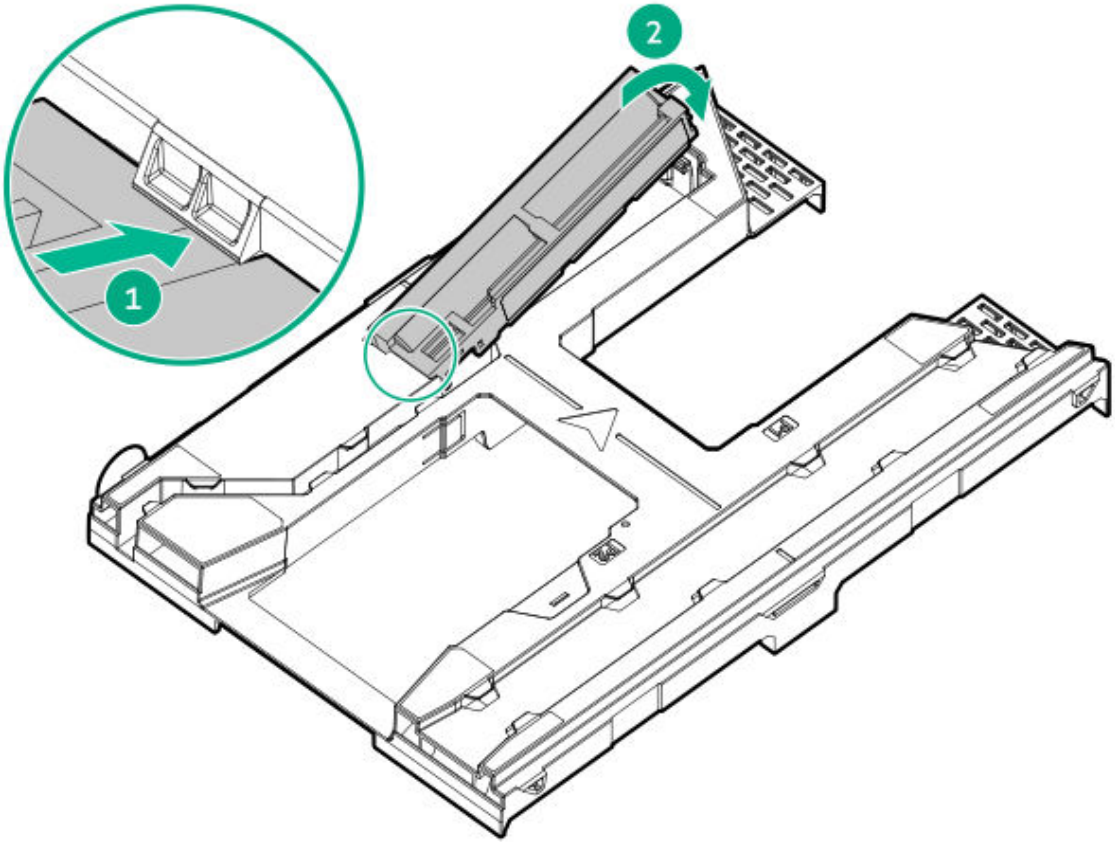

7. Install the DIMM baffle.
8. Connect the energy pack to the system board. To locate the energy pack option connector, see System board components.

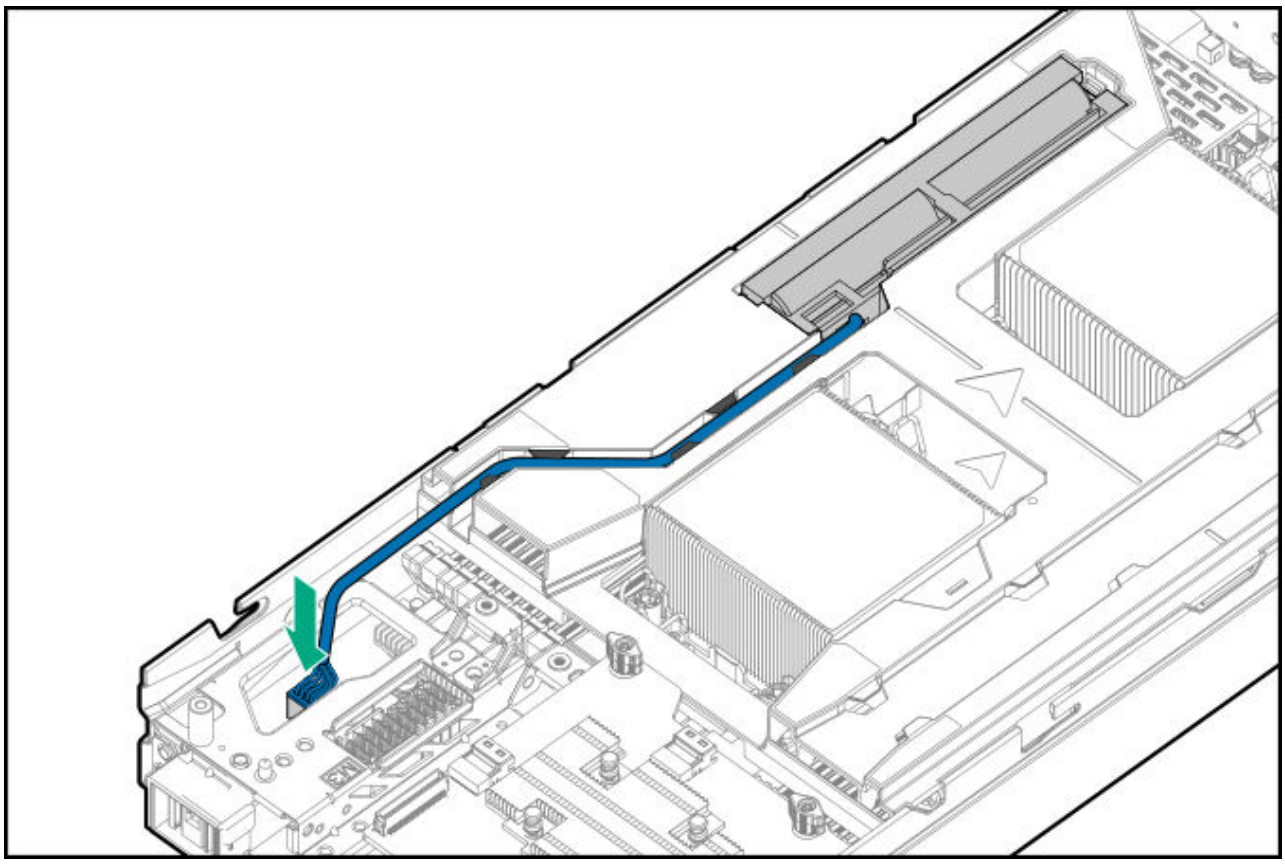

NOTE: Connect the energy pack cable into the port located under the mezzanine 3 option card.

9. Install the mezzanine option card.
10. Install the access panel.
11. Install the compute module.
12. Power up the compute module.

Memory options

IMPORTANT: This compute module does not support mixing LRDIMMs and RDIMMs. Attempting to mix any combination of these DIMMs can cause the server to halt during BIOS initialization. All memory installed in the compute module must be of the same type.

Subtopics

Memory population information
DIMM-processor compatibility
HPE SmartMemory speed information
Installing a DIMM
Intel Optane persistent memory 200 series for HPE

Memory population information

For specific memory population information, see the memory population guidelines on the Hewlett Packard Enterprise website at **https://www.hpe.com/docs/server-memory**.

DIMM-processor compatibility

The HPE Synergy 480 Gen10 Plus Compute Module uses the third-generation Intel Xeon Scalable processor. The third-generation Intel Xeon Scalable processor supports DDR4-3200 DIMMs. Mixing DIMM types is not supported. Install only the supported DDR4-3200 DIMM.

HPE SmartMemory speed information

For more information about memory speed information, see the Hewlett Packard Enterprise website (https://www.hpe.com/docs/memory-speed-table).

Installing a DIMM

Prerequisites

Before installing this option, be sure you have the following:

The components included with the hardware option kit.

For more information on specific options, see the compute module QuickSpecs on the **Hewlett Packard Enterprise website**.

About this task

The server supports up to 32 DIMMs.

Procedure

1. Power down the compute module.
2. Remove the compute module.
3. Place the compute module on a flat, level work surface.
4. Remove the access panel.
5. Flip over the DIMM baffle.
6. Open the DIMM slot latches.
7. Install the DIMM.

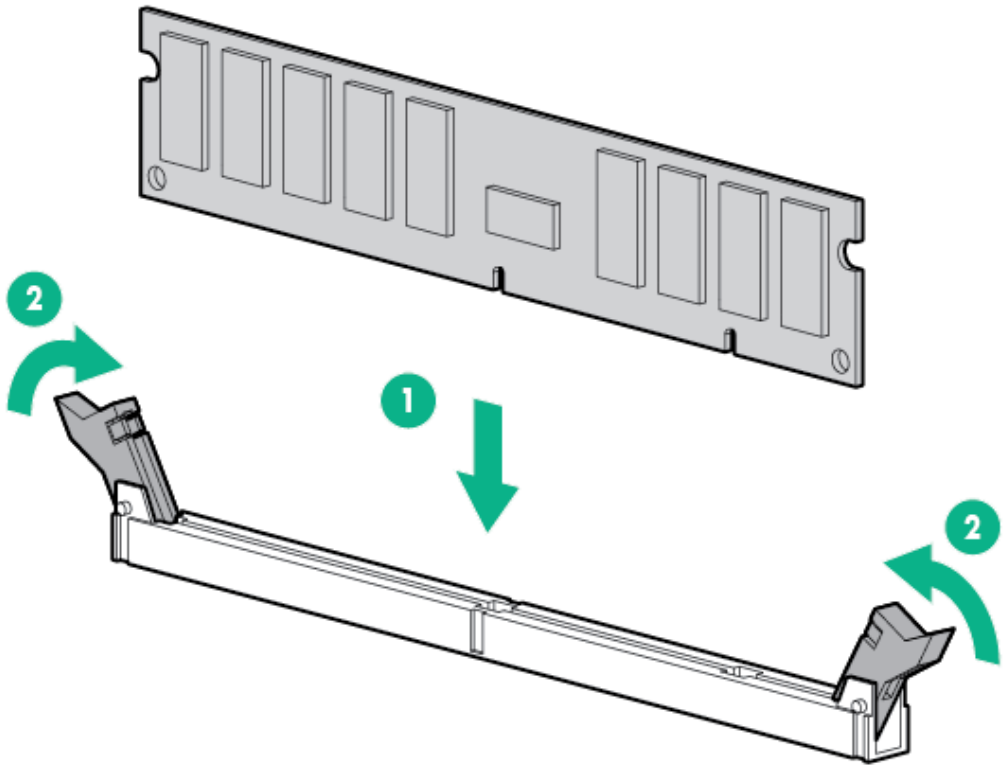

8. Install the DIMM baffle.
9. Install the access panel.
.0. Install the compute module.

.1. Power up the compute module.

Results

Use the BIOS/Platform Configuration (RBSU) in the UEFI System Utilities to configure the memory mode.

Intel Optane persistent memory 200 series for HPE

Intel Optane persistent memory 200 series for HPE offers the flexibility to deploy as dense memory (Memory mode) or fast storage (App Direct mode) and enables per-socket memory capacity of up to 3.0 TB. Persistent memory modules, together with traditional volatile DRAM DIMMs, provide fast, high-capacity, cost-effective memory and storage to transform big data workloads and analytics by enabling data to be stored, moved, and processed quickly.

Persistent memory modules use the standard DIMM form factor and are installed alongside DIMMs in a compute module memory slot. Intel Optane persistent memory 200 series for HPE is designed for use only with second-generation Intel Xeon Scalable processors, and is available in the following capacities:

- 128 GB
- 256 GB
- 512 GB

Subtopics

Persistent memory module-processor compatibility
Persistent memory module population information
System requirements for persistent memory module support
Installing persistent memory modules
Configuring the compute module for Intel Optane persistent memory 200 series for HPE
Persistent memory module relocation guidelines
Migrating a persistent memory module

Persistent memory module-processor compatibility

Intel Optane persistent memory 200 series for HPE is supported only in servers with second-generation Intel Xeon Scalable processors installed.

Persistent memory module population information

For specific population and configuration information, see the memory population guidelines on the Hewlett Packard Enterprise website (**https://www.hpe.com/docs/server-memory**).

System requirements for persistent memory module support

> **IMPORTANT:**
> Hewlett Packard Enterprise recommends that you implement best-practice configurations such as clustered configurations for high availability (HA).

Before installing persistent memory modules, make sure that the following components and software are available:

- A supported HPE ProLiant Gen10 Plus server or Synergy compute module using third-generation Intel Xeon Scalable processors.

  For more information, see the product QuickSpecs on the Hewlett Packard Enterprise website (**https://www.hpe.com/support/persistentmemoryQS**).

- HPE DDR4 Standard Memory RDIMMs or LRDIMMs (the number will vary based on your chosen configuration).

- Supported firmware and drivers:

  - System ROM version 1.40 or later
  - Server Platform Services (SPS) Firmware version 04.04.04.053
  - HPE iLO 5 Firmware version 2.44
  - HPE Innovation Engine Firmware version 1.0.0.20 or later

    Download the required firmware and drivers from the Hewlett Packard Enterprise website (**https://www.hpe.com/info/persistentmemory**).

- A supported operating system:

  - Windows Server 2016 with persistent memory drivers from Hewlett Packard Enterprise
  - Windows Server 2019
  - Red Hat Enterprise Linux 7.9 and later

- Red Hat Enterprise Linux 8.2 and later
- SUSE Linux Enterprise Server 12 SP5 and later
- SUSE Linux Enterprise Server 15 SP2 and later
- VMware vSphere 7.0 U2 and later
- VMware vSphere 6.7 U3 with P03

- Hardware and licensing requirements for optional encryption of the persistent memory modules:
  - HPE TPM 2.0 (local key encryption)
  - HPE iLO Advanced License (remote key encryption)
  - Key management server (remote key encryption)

For more information, see the Intel Optane persistent memory 200 series for HPE User Guide on the Hewlett Packard Enterprise website (**https://www.hpe.com/info/persistentmemory-docs**).

Installing persistent memory modules

Prerequisites

Before you perform this procedure, make sure that you have the following items available:

- The components included with the hardware option kit
- A T-10 Torx screwdriver might be needed to unlock the access panel.

Before beginning the installation, review the memory population guidelines on the Hewlett Packard Enterprise website (**https://www.hpe.com/docs/server-memory**).

About this task

> **IMPORTANT:**
> Hewlett Packard Enterprise recommends that you implement best-practice configurations such as clustered configurations for high availability (HA).

Use this procedure only for new persistent memory module installations. If you are migrating this persistent memory module from another compute module, see the Intel Optane persistent memory 200 series for HPE User Guide on the Hewlett Packard Enterprise website (**https://www.hpe.com/info/persistentmemory-docs**).

Procedure

1. Observe the following alerts:

> **CAUTION:**
>
> DIMMs are keyed for proper alignment. Align notches in the DIMM with the corresponding notches in the DIMM slot before inserting the DIMM. Do not force the DIMM into the slot. When installed properly, not all DIMMs will face in the same direction.

> **CAUTION:**
>
> Electrostatic discharge can damage electronic components. Be sure you are properly grounded before beginning this procedure.

> **CAUTION:**
>
> Failure to properly handle DIMMs can damage the DIMM components and the system board connector. For more information, see the DIMM handling guidelines in the troubleshooting guide for your product on the Hewlett Packard Enterprise website:
>
> - HPE ProLiant Gen10 Plus (**https://www.hpe.com/info/gen10plus-troubleshooting**)
> - HPE Synergy (**https://www.hpe.com/info/synergy-troubleshooting**)

2. Power down the compute module.
   a. Shut down the OS as directed by the OS documentation.
   b. To place the compute module in standby mode, press the Power On/Standby button. When the compute module enters standby power mode, the system power LED changes to amber.
   c. Disconnect the power cords (rack and tower servers).
3. Remove the compute module from the frame.
4. Place the compute module on a flat, level work surface.
5. Remove the access panel.
6. Flip over the DIMM baffle.
7. Install the persistent memory module.

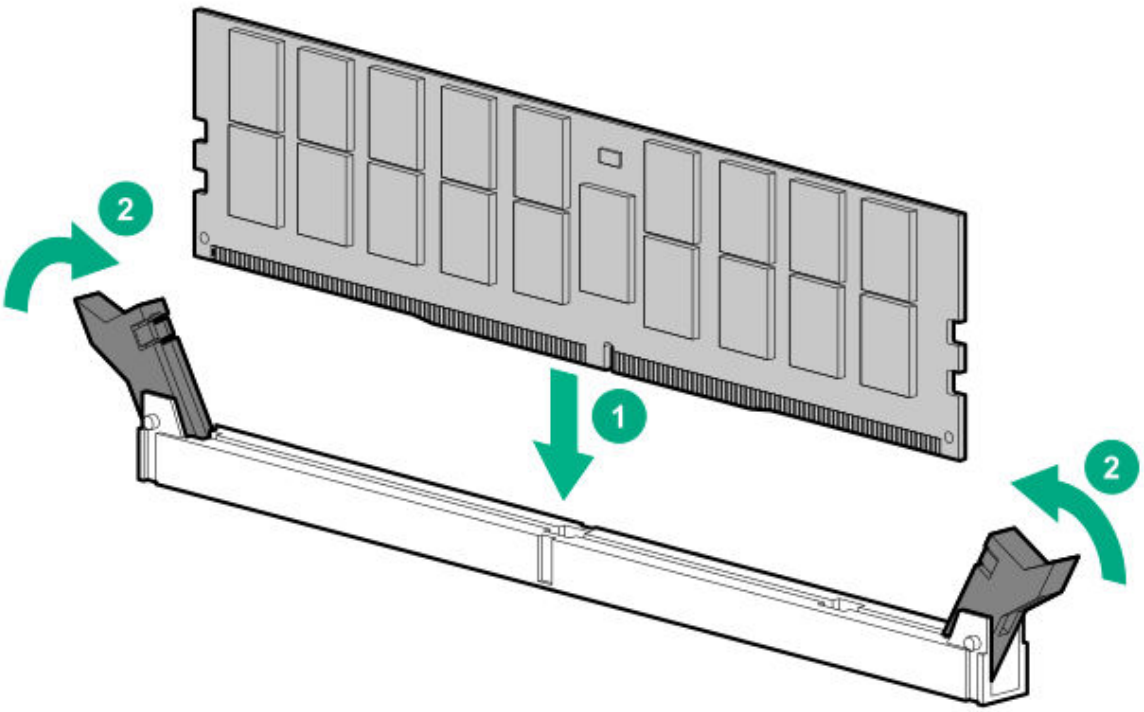

8. Install the DIMM baffle.
9. Install the access panel.
.0. Slide or install the compute module into the frame.
.1. If removed, reconnect all power cables.
.2. Power up the compute module.
.3. Configure the server for Intel Optane persistent memory for HPE.

More information

Persistent memory module population information
Configuring the compute module for Intel Optane persistent memory 200 series for HPE

Configuring the compute module for Intel Optane persistent memory 200 series for HPE

After installing persistent memory modules, configure the compute module for Intel Optane persistent memory for HPE.

> **IMPORTANT:**
> Always follow recommendations from your software application provider for high-availability best practices to ensure maximum uptime and data protection.

A number of configuration tools are available, including:

- UEFI System Utilities—Configure the server by using the UEFI System Utilities through the Remote Console. To access the UEFI System Utilities, press **F9** during POST.
- iLO RESTful API—Use the iLO RESTful API through tools such as the RESTful Interface Tool (ilorest) or other third-party tools.

For more information, see the Intel Optane persistent memory 200 series for HPE User Guide on the Hewlett Packard Enterprise website (**https://www.hpe.com/info/persistentmemory-docs**).

Persistent memory module relocation guidelines

Observe the relocation guidelines when doing the following:

- When relocating persistent memory modules to another DIMM slot on the compute module.
- When relocating persistent memory modules to another compute module.
- When reinstalling persistent memory modules after replacing the compute module system board.

> **IMPORTANT:**
> When data must be preserved, Hewlett Packard Enterprise strongly recommends that you perform a manual backup of all user data on the persistent memory modules before changing the goal configuration or performing relocation procedures.

Requirements for relocating persistent memory modules or a set of persistent memory modules when the data must be preserved

- The destination compute module hardware must match the original compute module hardware configuration.

- All System Utilities settings in the destination compute module must match the original System Utilities settings in the original compute module.
- If persistent memory modules are used with **Persistent Memory Interleaving** set to Enabled in the original compute module, do the following:
  - Install the persistent memory modules in the same DIMM slots in the destination compute module.
  - Install the entire interleaved set (all the DIMMs and persistent memory modules on the processor) on the destination compute module.

  If any of the requirements cannot be met during relocation, do the following:
  - Manually back up the persistent memory data before relocating persistent memory modules to another compute module.
  - Relocate the persistent memory modules to another compute module.
  - Sanitize all persistent memory modules on the new compute module before using them.

Requirements for relocating encrypted persistent memory modules or a set of persistent memory modules when the data must be preserved

- If persistent memory modules are encrypted with local key management, either manually retrieve the persistent memory module passwords from the compute module (user-generated passwords only) or export a password file to a USB key.

  Hewlett Packard Enterprise recommends exporting the password file to a USB key.
- Follow the requirements for relocating persistent memory modules or a set of persistent memory modules when the data must be preserved.
- Do one of the following:
  - If persistent memory modules are encrypted with local key management, either manually enter the persistent memory module passwords in the System Utilities or import the password file from the USB key.
  - If persistent memory modules are encrypted with remote key management, enroll the HPE iLO in the key management server to provide access to the data on the persistent memory modules.

  For more information, see the Intel Optane persistent memory 200 series for HPE User Guide on the Hewlett Packard Enterprise website (**https://www.hpe.com/info/persistentmemory-docs**).

Requirements for relocating persistent memory modules or a set of persistent memory modules when the data does not have to be preserved

- Move the persistent memory modules to the new location and sanitize all persistent memory modules after installing them to the new location.

- Observe the DIMM and persistent memory module population guidelines.
- Observe the process for removing a persistent memory module.
- Observe the process for installing a persistent memory module.
- Review and configure the system settings for Intel Optane persistent memory for HPE.

For more information, see the Intel Optane persistent memory 200 series for HPE User Guide on the Hewlett Packard Enterprise website (**https://www.hpe.com/info/persistentmemory-docs**).

Migrating a persistent memory module

IMPORTANT:

When data must be preserved, Hewlett Packard Enterprise strongly recommends that you perform a manual backup of all user data on the persistent memory modules before changing the goal configuration or performing relocation procedures.

HPE Trusted Platform Module 2.0 guidelines

CAUTION: Always observe the guidelines in this document. Failure to follow these guidelines can cause hardware damage or halt data access.

Hewlett Packard Enterprise SPECIAL REMINDER: Before enabling TPM functionality on this system, you must ensure that your intended use of TPM complies with relevant local laws, regulations and policies, and approvals or licenses must be obtained if applicable.

For any compliance issues arising from your operation/usage of TPM which violates the above mentioned requirement, you shall bear all the liabilities wholly and solely. Hewlett Packard Enterprise will not be responsible for any related liabilities.

慧与特别提醒：在您启用系统中的TPM功能前，请务必确认您对TPM的使用遵守当地相关法律、法规及政策，并已事先获得所需的一切批准及许可（如适用），因您未获得相应的操作/使用许可而导致的违规问题，皆由您自行承担全部责任，与慧与无涉。

When installing or replacing a TPM, observe the following guidelines:

- Do not remove an installed TPM. Once installed, the TPM becomes a permanent part of the system board.
- When installing or replacing hardware, Hewlett Packard Enterprise service providers cannot enable the TPM or the encryption technology. For security reasons, only the customer can enable these features.
- When returning a system board for service replacement, do not remove the TPM from the system board. When requested, Hewlett Packard Enterprise Service provides a TPM with the spare system board.
- Any attempt to remove the cover of an installed TPM from the system board can damage the TPM cover, the TPM, and the system board.
- If the TPM is removed from the original server and powered up on a different server, all data stored in the TPM including keys will be erased.
- When using BitLocker, always retain the recovery key/password. The recovery key/password is required to complete Recovery Mode after BitLocker detects a possible compromise of system integrity.
- Hewlett Packard Enterprise is not liable for blocked data access caused by improper TPM use. For operating instructions, see the TPM documentation or the encryption technology feature documentation provided by the operating system.

Retaining the BitLocker recovery key/password

The recovery key/password is generated during BitLocker setup, and can be saved and printed after BitLocker is enabled. When using BitLocker, always retain the recovery key/password. The recovery key/password is required to enter Recovery Mode after BitLocker detects a possible compromise of system integrity.

To help ensure maximum security, observe the following guidelines when retaining the recovery key/password:

- Always store the recovery key/password in multiple locations.
- Always store copies of the recovery key/password away from the compute module.
- Do not save the recovery key/password on the encrypted hard drive.

Cabling

Subtopics

Cabling resources

Energy pack option cabling
Cabling for the drive kits
P416ie-m Smart Array Controller cabling

Cabling resources

Cabling configurations and requirements vary depending on the product and installed options. For more information about product features, specifications, options, configurations, and compatibility, see the product QuickSpecs on the Hewlett Packard Enterprise website (**https://www.hpe.com/info/qs**).

Energy pack option cabling

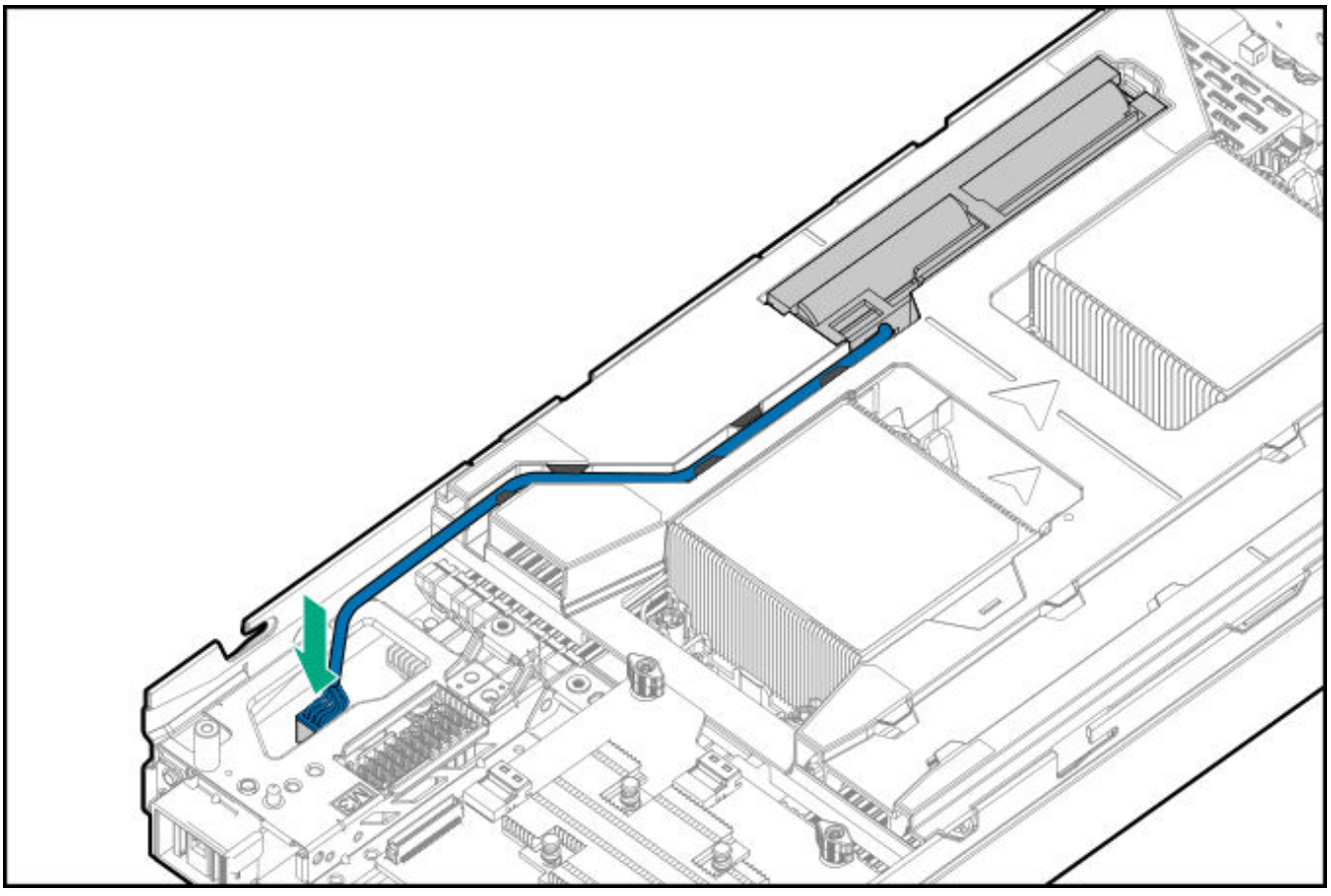

NOTE: Connect the energy pack cable into the port located under the mezzanine 3 option card.

Cabling for the drive kits

Subtopics

Cabling for two SAS/SATA and two NVMe drives
Cabling for four NVMe drives
Cabling for the front PCIe accelerator enablement kit

Cabling for two SAS/SATA and two NVMe drives

The premium four-drive kit can be configured with drives 1e and 2e as NVMe drives and drives 3 and 4 as SAS/SATA drives. The P416ie-m Smart Array Controller is required for this configuration. To enable this configuration, connect a SLIM/SAS cable to the Port 3i Connector. Then, connect the SLIM/SAS cable to the premium four-drive kit.

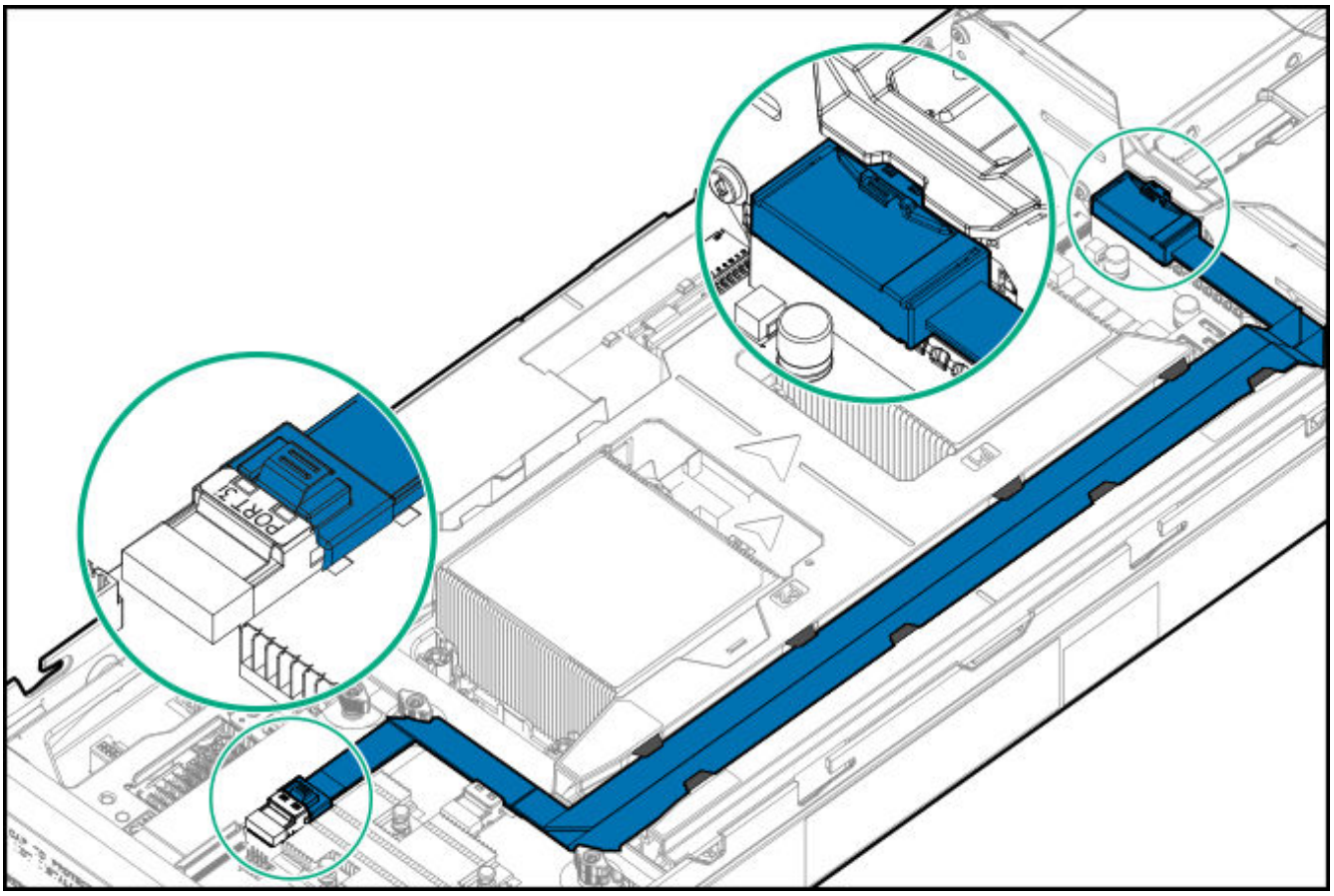

Cabling for four NVMe drives

The premium four-drive kit can be configured so that all drives are NVMe. Attach a direct connect cable to the premium four-drive kit instead of a SLIM/SAS cable.

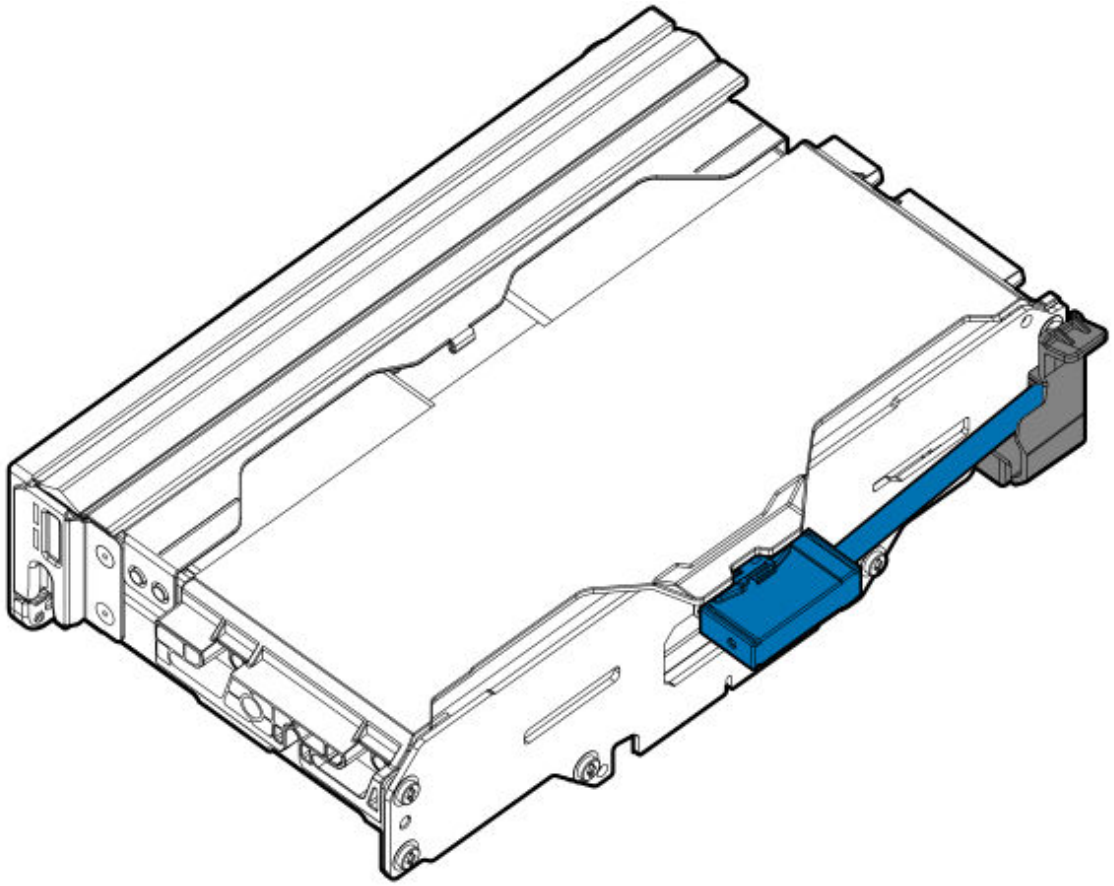

Cabling for the front PCIe accelerator enablement kit

Attach a direct connect cable to the front PCIe accelerator enablement kit.

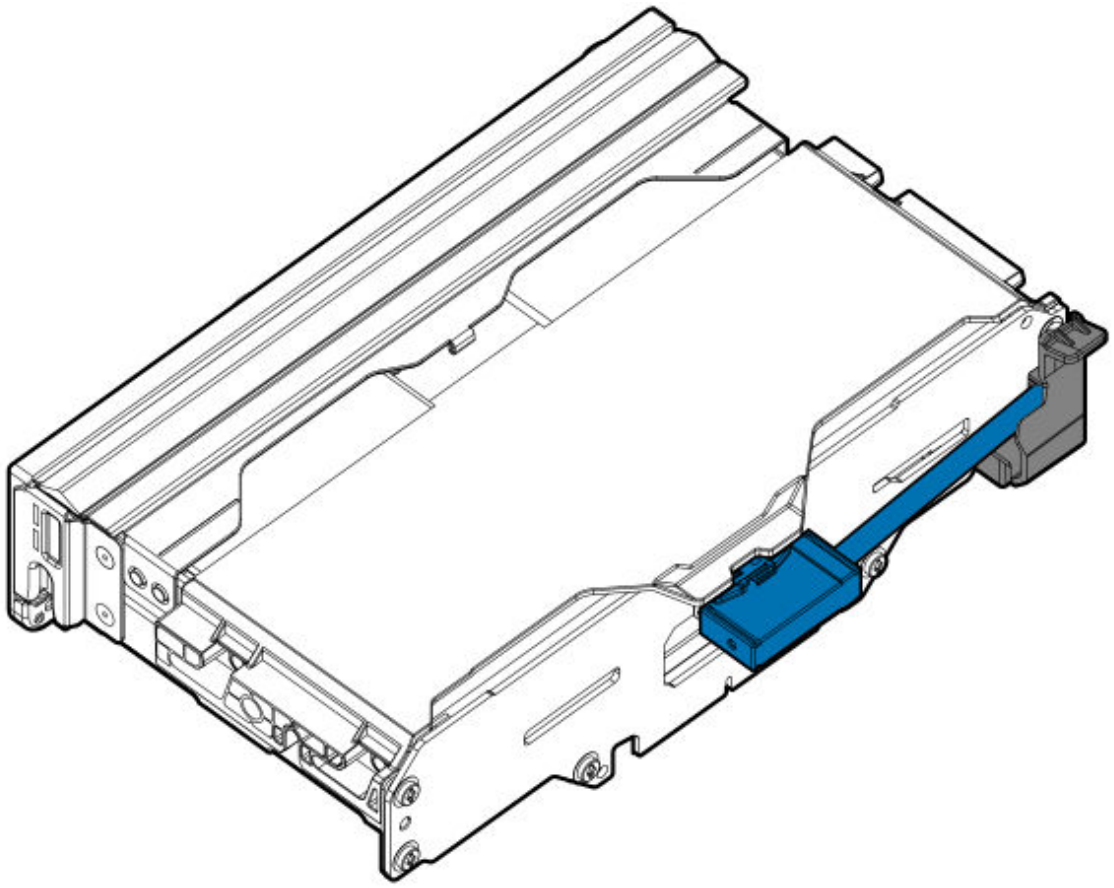

P416ie-m Smart Array Controller cabling

Connect a SLIM/SAS cable from the Port 3i connector to the SLIM/SAS cable connector.

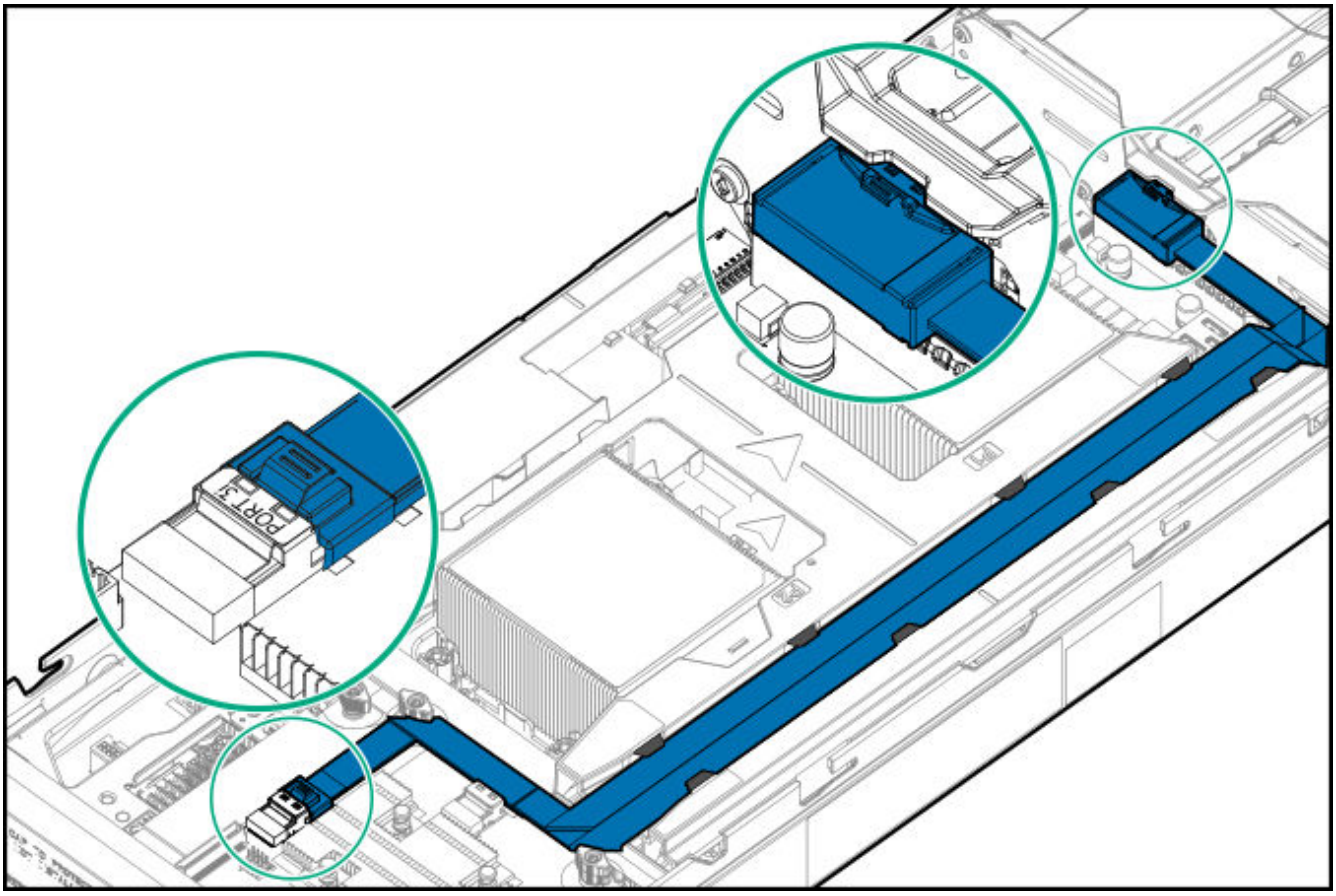

Removing and replacing the system battery

If the compute module no longer automatically displays the correct date and time, replace the system battery. The system battery provides power to the real-time clock. Under normal use, battery life is 5–10 years.

WARNING: The computer contains an internal lithium manganese dioxide, a vanadium pentoxide, or an alkaline battery pack. A risk of fire and burns exists if the battery pack is not properly handled. To reduce the risk of personal injury:

- Do not attempt to recharge the battery.
- Do not expose the battery to temperatures higher than 60°C (140°F).
- Do not disassemble, crush, puncture, short external contacts, or dispose of in fire or water.
- Replace only with the spare designated for this product.

1. Power down the compute module.
2. Remove the compute module.
3. Place the compute module on a flat, level work surface.
4. Remove the access panel.
5. Remove the front drive cage.
6. Locate the battery on the System board components.
7. Remove the battery.

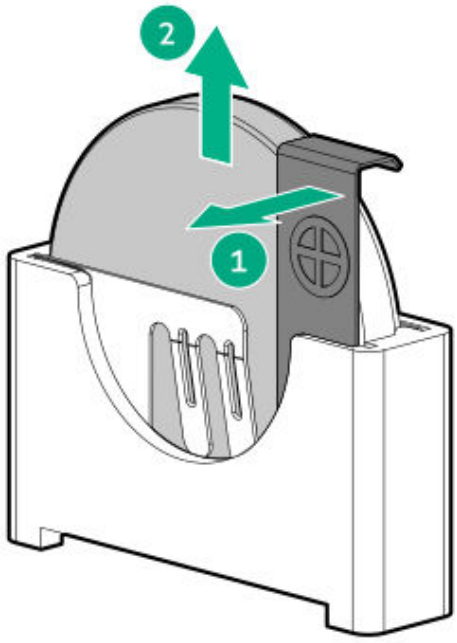

IMPORTANT: Replacing the system board battery resets the system ROM to its default configuration. After replacing the battery, use BIOS/Platform Configuration (RBSU) in the UEFI System Utilities to reconfigure the system.

To replace the component, reverse the removal procedure.

For more information about battery replacement or proper disposal, contact an authorized reseller or a support specialist.

Electrostatic discharge

Subtopics

Preventing electrostatic discharge
Grounding methods to prevent electrostatic discharge

Preventing electrostatic discharge

About this task

To prevent damaging the system, be aware of the precautions you must follow when setting up the system or handling parts. A discharge of static electricity from a finger or other conductor may damage system boards or other static-sensitive devices. This type of damage may reduce the life expectancy of the device.

Procedure

- Avoid hand contact by transporting and storing products in static-safe containers.
- Keep electrostatic-sensitive parts in their containers until they arrive at static-free workstations.
- Place parts on a grounded surface before removing them from their containers.
- Avoid touching pins, leads, or circuitry.
- Always be properly grounded when touching a static-sensitive component or assembly.

Grounding methods to prevent electrostatic discharge

Several methods are used for grounding. Use one or more of the following methods when handling or installing electrostatic-sensitive parts:

- Use a wrist strap connected by a ground cord to a grounded workstation or computer chassis. Wrist straps are flexible straps with a minimum of 1 megohm ±10 percent resistance in the ground cords. To provide proper ground, wear the strap snug against the skin.
- Use heel straps, toe straps, or boot straps at standing workstations. Wear the straps on both feet when standing on conductive floors or dissipating floor mats.
- Use conductive field service tools.
- Use a portable field service kit with a folding static-dissipating work mat.

If you do not have any of the suggested equipment for proper grounding, have an authorized reseller install the part.

For more information on static electricity or assistance with product installation, contact the Hewlett Packard Enterprise Support Center.

Specifications

For more information:

- **Extended ambient temperature guidelines: Extended Ambient Temperature Guidelines for Gen10 Plus HPE ProLiant and HPE Apollo servers and HPE Synergy**
- **Cable specifications: HPE Compute Transceiver and Cable Hardware Matrix**

Subtopics

Compute module environmental specifications
Compute module physical specifications

Compute module environmental specifications

Specification	Value
Temperature range*	**—**
Operating	10°C to 35°C (50°F to 95°F)
Non-operating	-30°C to 60°C (-22°F to 140°F)
Relative humidity (noncondensing)**	**—**
Operating	8% to 90% @ -12°C - 24°C (10.4°F - 75.2°F)
Non-operating	5% to 95% relative humidity (Rh) @ 38.7°C (101.7° F), maximum wet bulb temperature, non-condensing
Altitude†	—
Operating	3050 m (10,000 ft)
Non-operating	9144 m (30,000 ft)

* The following temperature conditions and limitations apply:

- All temperature ratings shown are for sea level.
- An altitude derating of 1°C per 305m (1.8°F per 1,000.7 ft) above sea level
- No direct sunlight is allowed.
- The maximum permissible rate of change is 10°C/hr (18°F/hr).

- The type and number of options installed might reduce the upper temperature and humidity limits.
- Operating with a fan fault or above 30°C (86°F) might reduce system performance.

** Storage maximum humidity of 95% is based on a maximum temperature of 45°C (113°F).

† Maximum storage altitude corresponds to a minimum pressure of 70 kPa (10.1 psia).

Compute module physical specifications

The following details physical specifications for the HPE Synergy 480 Gen10 Plus Compute Module.

Specification	Value
Height	63.60 mm (2.50 in)
Depth	606.50 mm (23.88 in)
Width	214.00 mm (8.43 in)
Weight (maximum)	9.01 kg (19.86 lb)
Weight (minimum)	6.57 kg (14.50 lb)

HPE Synergy documentation resources

The Hewlett Packard Enterprise Support Center provides a comprehensive, one stop location for all HPE Synergy documentation, including installation instructions, maintenance and service guides, best practices, and links to additional resources. It supports filtering to improve findability.

Subtopics

HPE Synergy firmware update resources

HPE Synergy firmware update resources

Several resources are available to assist you with updating firmware for the HPE Synergy solution. The HPE Synergy Software Release Information **site** provides interactive tools for firmware update information. In addition, you can use the HPE Synergy Software Releases - Overview page, available on the site, to access downloads for HPE Synergy software. Additional resources are also available within HPE OneView.

HPE Synergy documentation map

The Hewlett Packard Enterprise Support Center provides access to the HPE Synergy documentation. For quick links to different HPE Synergy document types, see **HPE Synergy Documentation Quick Links**.

In addition, the **HPE Synergy Software Release Information** site provides an interactive resource for software release information.

You can access drivers, manuals, and parts at **Hewlett Packard Enterprise Support Center**.

Software Release Information

HPE Synergy Software Release Information site, which include release information, such as:

- What's new with HPE Synergy releases
- Management combinations
- HPE Synergy Service Packs (SSPs)
- Operating systems
- Comparison tools
- Useful links

Managing

- **HPE OneView User Guide for HPE Synergy**
- **HPE OneView Best Practices Guide for Deployment and Management**
- **HPE Synergy Frame Link Module User Guide**

Planning

- **HPE Synergy Migration Guide**
- **HPE Synergy 12000 Frame Site Planning Guide**
- **HPE Synergy Configuration and Compatibility Guide**
- **HPE OneView Support Matrix for HPE Synergy**
- **HPE Synergy Power Management Overview**

Monitoring

- **HPE OneView User Guide for HPE Synergy**
- **HPE OneView Global Dashboard User Guide**

Installing hardware

- HPE Synergy Start Here Poster (included with frame)
- Rack Rails Installation Instructions for the HPE Synergy 12000 Frame (included with frame)
- HPE Synergy 12000 Frame Rack Template (included with frame)
- Hood labels

Maintaining

- Product maintenance and service guides
- **HPE OneView User Guide for HPE Synergy**
- **HPE Synergy Appliances Maintenance and Service Guide for HPE Synergy Composer and HPE Synergy Image Streamer**
- **HPE Synergy Appliances Maintenance and Service Guide for HPE Synergy Composer2**

- **HPE Synergy Cabling Guide**
- **HPE OneView User Guide for HPE Synergy**
  —Quick Start: Initial hardware setup

Configuring for managing and monitoring	Troubleshooting

• **HPE OneView User Guide for HPE Synergy**
• **HPE OneView API Reference Quick Links**
• **HPE Synergy Software Release Information** site, which includes release information, such as:
  ◦ What's new with HPE Synergy releases
  ◦ Management combinations
  ◦ HPE Synergy Service Packs (SSPs)
  ◦ Operating systems
  ◦ Comparison tools
  ◦ Useful links
	• **HPE Synergy Troubleshooting Guide for Gen11**
	• **HPE Synergy Troubleshooting Guide for Gen9, Gen10, and Gen10 Plus**
	• **Integrated Management Log Messages for HPE ProLiant Gen10, Gen10 Plus, and Gen11 servers and HPE Synergy**
	• **HPE OneView Alerts User Guide for HPE Synergy**

Websites

HPE Synergy 480 Gen10 Plus Compute Module Documentation

https://www.hpe.com/info/synergy480gen10plus-docs

HPE Synergy Documentation Quick Links

https://www.hpe.com/info/synergy-docs

HPE Synergy Software Release Information

https://www.hpe.com/info/synergy-sw-release-information

For additional websites, see Support and other resources.

Support and other resources

Subtopics

Accessing Hewlett Packard Enterprise Support
HPE product registration
Accessing updates

Remote support
Warranty information
Regulatory information
Documentation feedback

Accessing Hewlett Packard Enterprise Support

- For live assistance, go to the Contact Hewlett Packard Enterprise Worldwide website:

  https://www.hpe.com/info/assistance

- To access documentation and support services, go to the Hewlett Packard Enterprise Support Center website:

  https://www.hpe.com/support/hpesc

Information to collect

- Technical support registration number (if applicable)
- Product name, model or version, and serial number
- Operating system name and version
- Firmware version
- Error messages
- Product-specific reports and logs
- Add-on products or components
- Third-party products or components

HPE product registration

To gain the full benefits of the Hewlett Packard Enterprise Support Center and your purchased support services, add your contracts and products to your account on the HPESC.

- When you add your contracts and products, you receive enhanced personalization, workspace alerts, insights through the dashboards, and easier management of your environment.

- You will also receive recommendations and tailored product knowledge to self-solve any issues, as well as streamlined case creation for faster time to resolution when you must create a case.

To learn how to add your contracts and products, see **https://www.hpe.com/info/add-products-contracts**.

Accessing updates

- Some software products provide a mechanism for accessing software updates through the product interface. Review your product documentation to identify the recommended software update method.
- To download product updates:

  Hewlett Packard Enterprise Support Center

  https://www.hpe.com/support/hpesc

  My HPE Software Center

  https://www.hpe.com/software/hpesoftwarecenter
- To subscribe to eNewsletters and alerts:

  https://www.hpe.com/support/e-updates
- To view and update your entitlements, and to link your contracts and warranties with your profile, go to the Hewlett Packard Enterprise Support Center **More Information on Access to Support Materials** page:

  https://www.hpe.com/support/AccessToSupportMaterials

> **IMPORTANT:**
> Access to some updates might require product entitlement when accessed through the Hewlett Packard Enterprise Support Center. You must have an HPE Account set up with relevant entitlements.

Remote support

Remote support is available with supported devices as part of your warranty or contractual support agreement. It provides intelligent event diagnosis, and automatic, secure submission of hardware event notifications to Hewlett Packard Enterprise, which initiates a fast and accurate resolution based on the service level of your product. Hewlett Packard Enterprise strongly recommends that you register your device for remote support.

If your product includes additional remote support details, use search to locate that information.

HPE Get Connected

https://www.hpe.com/services/getconnected

HPE Tech Care Service

https://www.hpe.com/services/techcare

HPE Complete Care Service

https://www.hpe.com/services/completecare

Warranty information

To view the warranty information for your product, see the **warranty check tool**.

Regulatory information

To view the regulatory information for your product, view the Safety and Compliance Information for Server, Storage, Power, Networking, and Rack Products, available at the Hewlett Packard Enterprise Support Center:

https://www.hpe.com/support/Safety-Compliance-EnterpriseProducts

Additional regulatory information

Hewlett Packard Enterprise is committed to providing our customers with information about the chemical substances in our products as needed to comply with legal requirements such as REACH (Regulation EC No 1907/2006 of the European Parliament and the Council). A chemical information report for this product can be found at:

https://www.hpe.com/info/reach

For Hewlett Packard Enterprise product environmental and safety information and compliance data, including RoHS and REACH, see:

https://www.hpe.com/info/ecodata

For Hewlett Packard Enterprise environmental information, including company programs, product recycling, and energy efficiency, see:

https://www.hpe.com/info/environment

Documentation feedback

Hewlett Packard Enterprise is committed to providing documentation that meets your needs. To help us improve the documentation, use the **Feedback** button and icons (at the bottom of an opened document) on the Hewlett Packard Enterprise Support Center portal (**https://www.hpe.com/support/hpesc**) to send any errors, suggestions, or comments. This process captures all document information.