HP ProLiant WS460c G6 Workstation Blade with WS460c Graphics Expansion Blade User Guide

Abstract

This guide provides operation information for the HP ProLiant WS460c G6 Workstation Blade with WS460c Graphics Expansion Blade. This guide is for technicians that install, administer, and troubleshoot servers and storage systems.



Part Number: 592162-007
June 2012
Edition: 7

© Copyright 2009, 2012 Hewlett-Packard Development Company, L.P.

The information contained herein is subject to change without notice. The only warranties for HP products and services are set forth in the express warranty statements accompanying such products and services. Nothing herein should be construed as constituting an additional warranty. HP shall not be liable for technical or editorial errors or omissions contained herein.

Microsoft®, Windows®, Windows NT®, Windows® XP, and Windows Server® are U.S. registered trademarks of Microsoft Corporation. Bluetooth® is a trademark owned by its proprietor and used by Hewlett-Packard Company under license. AMD is a trademark of Advanced Micro Devices, Inc. Intel® and Pentium® are trademarks of Intel Corporation in the U.S. and other countries. Java is a registered trademark of Oracle and/or its affiliates.

Contents

Component identification 6
- Front panel components 6
- Front panel components for workstation blade with graphics expander blade 7
- Front panel LEDs 8
- Front panel LEDs for workstation blade with graphics expansion blade 9
- SAS and SATA hard drive LEDs 10
- SAS and SATA hard drive LED combinations 10
- System board components 11
  - Mezzanine connector definitions 12
  - DIMM slot locations 12
  - System maintenance switch 12
- HP c-Class Blade SUV Cable 13

Operations 14
- Power down the workstation blade 14
- Remove the workstation blade 15
- Remove the access panel 16
- Install the access panel 16
- Remove the DIMM baffle 16
- Remove the WS460c Graphics Expansion Blade access panel 17
- Remove the WS460c Graphics Expansion Blade 17
- Remove the WS460c Graphics Expansion Blade PCIe card cage 18
- Configure the WS460c Graphics Expansion Blade configuration with HBA 19

Setup 26
- Overview 26
- Installing an HP BladeSystem c-Class enclosure 26
- Installing workstation blade options 26
- Connecting to the network 26
- Installing a workstation blade 27

Hardware options installation 30
- Introduction 30
- Hard drive option 30
- Processor option 31
- Memory options 36
  - Memory subsystem architecture 36
  - Single-, dual-, and quad-rank DIMMs 36
  - DIMM identification 37
  - Memory configurations 37
  - General DIMM slot population guidelines 39
  - Installing a DIMM 41
- Cache module and battery pack option 42

Cabling 47
- BBWC battery pack cabling 47
- Using the HP c-Class Blade SUV Cable 47
- Connecting locally to a server blade with video and USB devices 47

Accessing a server blade with local KVM 47
Accessing local media devices 48
Software and configuration utilities 50
Server blade deployment tools 50
Software drivers and additional components 50
HP BladeSystem c-Class Advanced management 50
Network-based PXE deployment 51
Deployment methods 51
Configuration tools 56
HP ROM-Based Setup Utility 56
Array Configuration Utility 58
Option ROM Configuration for Arrays 59
Re-entering the server serial number and product ID 59
Management tools 60
Automatic Server Recovery 60
ROMPaq utility 60
Integrated Lights-Out 2 technology 60
Erase Utility 61
StorageWorks library and tape tools 61
HP Systems Insight Manager 61
Management Agents 61
Redundant ROM support 61
USB support and functionality 62
Ethernet and Fibre Channel module support 62
Diagnostic tools 63
HP Insight Diagnostics 63
HP Insight Diagnostics survey functionality 63
Integrated Management Log 63
Array Diagnostic Utility 64
Remote support and analysis tools 64
HP Insight Remote Support software 64
Keeping the system current 65
ProLiant Support Packs 65
Operating system version support 65
System Online ROM flash component utility 65
Change control and proactive notification 65
Care Pack 65
HP Smart Update Manager 66
Troubleshooting 67
Troubleshooting resources 67
Pre-diagnostic steps 67
Important safety information 67
Symptom information 69
Prepare the server for diagnosis 69
Service notifications 71
Loose connections 71
Server health LEDs 71
Troubleshooting flowcharts 72
Start diagnosis flowchart 72
General diagnosis flowchart 73
Server blade power-on problems flowchart 75
POST problems flowchart 77

OS boot problems flowchart 79
Server fault indications flowchart 81
POST error messages and beep codes 83
Introduction to POST error messages 83
Battery replacement 85
Regulatory compliance notices 87
Regulatory compliance identification numbers 87
Federal Communications Commission notice 87
FCC rating label 87
FCC Notice, Class A Equipment 87
FCC Notice, Class B Equipment 87
Declaration of conformity for products marked with the FCC logo, United States only 88
Modifications 88
Cables 88
Canadian notice (Avis Canadien) 88
European Union regulatory notice 89
Disposal of waste equipment by users in private households in the European Union 89
Japanese notice 90
BSMI notice 90
Korean notice 90
Chinese notice 91
Vietnam compliance marking notice 91
Laser compliance 91
Battery replacement notice 91
Taiwan battery recycling notice 92
Acoustics statement for Germany (Geräuschemission) 92
Electrostatic discharge 93
Preventing electrostatic discharge 93
Grounding methods to prevent electrostatic discharge 93
Specifications 94
Environmental specifications 94
Server blade specifications 94
Support and other resources 95
Before you contact HP 95
HP contact information 95
Customer Self Repair 95
Acronyms and abbreviations 103
Documentation feedback 105
Index 106

Component identification

Front panel components

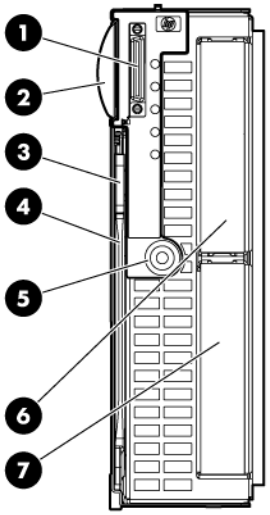

Item	Description
1	SUV connector*
2	Serial label pull tab
3	Release button
4	Server blade release lever
5	Power On/Standby button
6	Hard drive bay 1
7	Hard drive bay 2

*The SUV connector and the HP c-Class Blade SUV Cable are for some workstation blade configuration and diagnostic procedures.

Front panel components for workstation blade with graphics expander blade

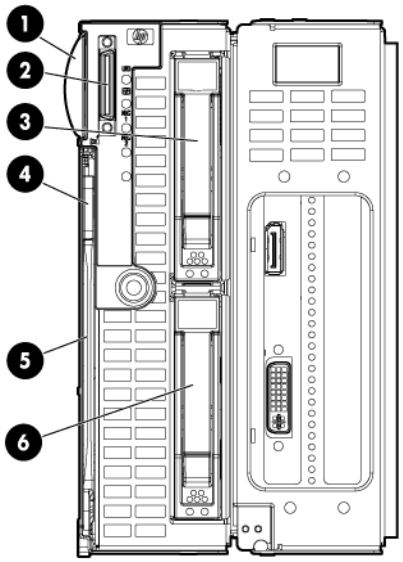

Item	Description
1	Serial label pull tab
2	SUV connector
3	Hard drive bay 1
4	Release button
5	Server blade release lever
6	Hard drive bay 2

Front panel LEDs

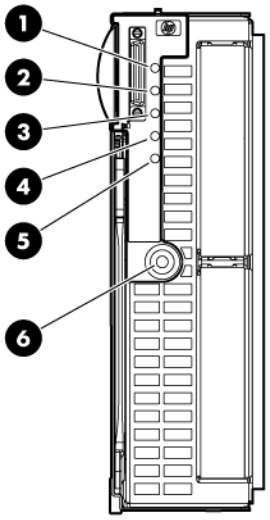

Item	Description	Status
1	UID LED	Blue = Identified Blue flashing = Active remote management Off = No active remote management
2	Health LED	Green = Normal Flashing = Booting Amber = Degraded condition Red = Critical condition
3	Flex-10 NIC 1 LED*	Green = Network linked Green flashing = Network activity Off = No link or activity
4	Flex-10 NIC 1 LED*	Green = Network linked Green flashing = Network activity Off = No link or activity
5	Reserved	—
6	System power LED	Green = On Amber = Standby (auxiliary power available) Off = Off

Front panel LEDs for workstation blade with graphics expansion blade

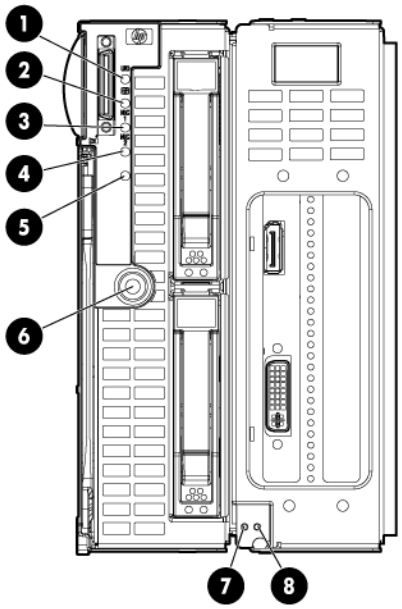

Item	Description	Status
1	UID LED	Blue = Identified Blue flashing = Active remote management Off = No active remote management
2	Health LED	Green = Normal Flashing = Booting Amber = Degraded condition Red = Critical condition
3	Flex-10 NIC 1 LED*	Green = Network linked Green flashing = Network activity Off = No link or activity
4	Flex-10 NIC 1 LED*	Green = Network linked Green flashing = Network activity Off = No link or activity
5	Reserved	—
6	System power LED	Green = On Amber = Standby (auxiliary power available)
7	UID LED	Blue = Identified BLue flashing = Active remote management Off - No active remote management
8	Health LED	Green = Normal Flashing = Booting Amber = Degraded condition Red = Critical condition

SAS and SATA hard drive LEDs

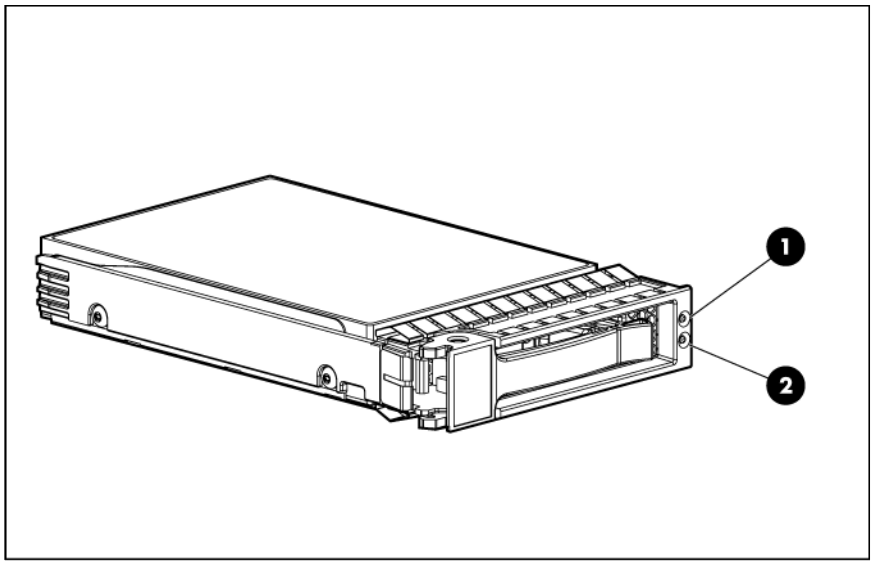

Item	Description
1	Fault/UID LED (amber/blue)
2	Online LED (green)

SAS and SATA hard drive LED combinations

Online/activity LED (green)	Fault/UID LED (amber/blue)	Interpretation
On, off, or flashing	Alternating amber and blue	The drive has failed, or a predictive failure alert has been received for this drive; it also has been selected by a management application.
On, off, or flashing	Steadily blue	The drive is operating normally, and it has been selected by a management application.
On	Amber, flashing regularly (1 Hz)	A predictive failure alert has been received for this drive. Replace the drive as soon as possible.
On	Off	The drive is online, but it is not active currently.
Flashing regularly (1 Hz)	Amber, flashing regularly (1 Hz)	**Do not remove the drive. Removing a drive may terminate the current operation and cause data loss.** The drive is part of an array that is undergoing capacity expansion or stripe migration, but a predictive failure alert has been received for this drive. To minimize the risk of data loss, do not replace the drive until the expansion or migration is complete.
Flashing regularly (1 Hz)	Off	**Do not remove the drive. Removing a drive may terminate the current operation and cause data loss.** The drive is rebuilding, erasing, or it is part of an array that is undergoing capacity expansion or stripe migration.
Flashing irregularly	Amber, flashing regularly (1 Hz)	The drive is active, but a predictive failure alert has been received for this drive. Replace the drive as soon as possible.
Flashing irregularly	Off	The drive is active, and it is operating normally.

Online/activity LED (green)	Fault/UID LED (amber/blue)	Interpretation
Off	Steadily amber	A critical fault condition has been identified for this drive, and the controller has placed it offline. Replace the drive as soon as possible.
Off	Amber, flashing regularly (1 Hz)	A predictive failure alert has been received for this drive. Replace the drive as soon as possible.
Off	Off	The drive is offline, a spare, or not configured as part of an array.

System board components

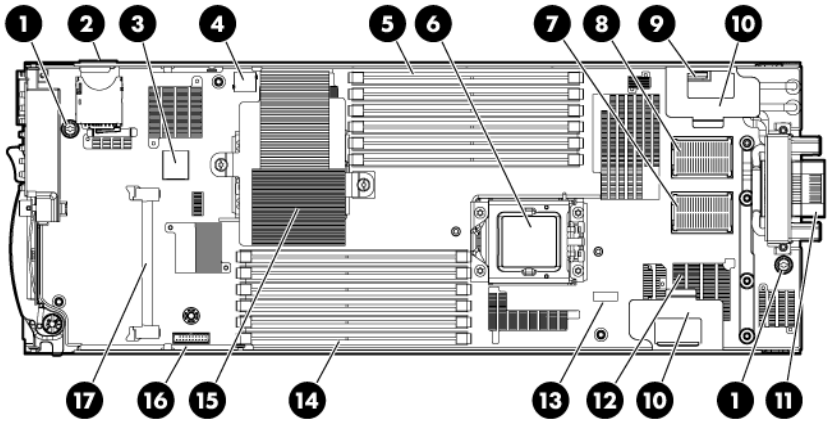

Item	Description
1	System board thumbscrews (2)
2	SD card slot
3	Internal USB connector
4	Hard drive backplane connector
5	Processor 2 DIMM slots (6)
6	Processor socket 2
7	Mezzanine connector 1 (Type I mezzanine only)
8	Mezzanine connector 2 (Type I or Type II mezzanine)
9	System battery
10	Battery tray
11	Enclosure connector
12	Embedded NICs (2)
13	System maintenance switch
14	Processor 1 DIMM slots (6)
15	Processor socket 1 (populated)
16	TPM connector
17	Cache module connector

The symbols correspond to the symbols located on the interconnect bays. For more information, see the *HP ProLiant WS460c G6 Workstation Blade with WS460c Graphics Expansion Blade Installation Instructions* that ship with the workstation blade.

Mezzanine connector definitions

A PCIe x8 mezzanine connector supports x16 cards at up to x8 speeds.

Item	PCIe
Mezzanine connector 1	x8, Type I mezzanine card only
Mezzanine connector 2	x8, Type 1 or II mezzanine card

DIMM slot locations

DIMM slots are numbered sequentially (1 through 6) for each processor. The supported AMP modes use the letter assignments for population guidelines.

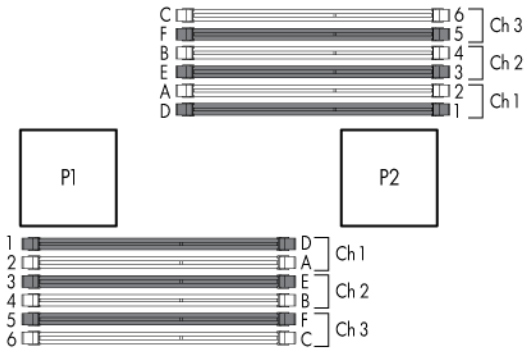

System maintenance switch

Position	Function	Default
1*	iLO 2 security override	Off
2	Configuration lock	Off
3	Reserved	Off
4	Reserved	Off
5*	Password disabled	Off
6*	Reset configuration	Off
7	Reserved	Off
8	Reserved	Off

*To access redundant ROM, set S1, S5, and S6 to ON.

HP c-Class Blade SUV Cable

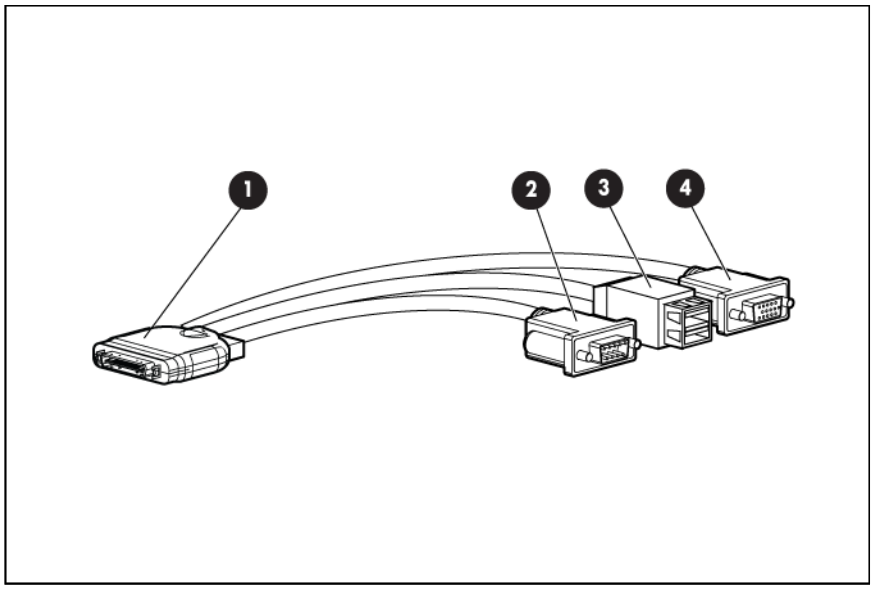

Item	Connector	Description
1	Server blade	For connecting to the SUV connector on the workstation blade front panel
2	Video	For connecting a video monitor
3	USB	For connecting up to two USB devices
4	Serial	For trained personnel to connect a null modem serial cable and perform advanced diagnostic procedures

Operations

Power down the workstation blade

Before powering down the workstation blade for any upgrade or maintenance procedures, perform a backup of critical server data and programs.



IMPORTANT: When the workstation blade is in standby mode, auxiliary power is still being provided to the system.

Depending on the Onboard Administrator configuration, use one of the following methods to power down the workstation blade:

- Press and release the Power On/Standby button.

  This method initiates a controlled shutdown of applications and the OS before the workstation blade enters standby mode.

- Press and hold the Power On/Standby button for more than 4 seconds to force the workstation blade to enter standby mode.

  This method forces the workstation blade to enter standby mode without properly exiting applications and the OS. If an application stops responding, you can use this method to force a shutdown.

- Use a virtual power button selection through iLO 2.

  This method initiates a controlled remote shutdown of applications and the OS before the workstation blade enters standby mode.

- Use the Onboard Administrator CLI to execute one of the following commands:
  - `poweroff server [bay number]`

    This command initiates a controlled shutdown of applications and the OS before the workstation blade enters standby mode.
  - `poweroff server [bay number] force`

    This form of the command forces the workstation blade to enter standby mode without properly exiting applications and the OS. If an application stops responding, this method forces a shutdown.

- Use the Onboard Administrator GUI to initiate a shutdown:
  a. Select the **Enclosure Information** tab.
  b. In the Device Bays item, select the **Overall** checkbox.
  c. From the Virtual Power menu, initiate a shutdown of applications and the OS:
     — For a controlled shutdown, select **Momentary Press**.
     — For an emergency shutdown, select **Press and Hold**.

Before proceeding, verify the workstation blade is in standby mode by observing that the system power LED is amber.

To power down all workstation blades, use one of the following methods:

- Execute one of the following commands using the Onboard Administrator CLI:

- `poweroff server all`

  This command initiates a controlled shutdown of applications and the OS before the workstation blade enters standby mode.

- `poweroff server all force`

  This command forces the workstation blade to enter standby mode without exiting applications and the OS. This command is an emergency method to force a shutdown in the event of a hung application.

- Use the Onboard Administrator GUI to initiate a shutdown:
  a. Select the **Enclosure Information** tab, and then in the Device Bays item, select the **Overall** checkbox.
  b. On the Virtual Power menu, to initiate a controlled shutdown of applications and the OS, select **Momentary Press**, or to initiate an emergency shutdown of applications and the OS, select **Press and Hold**.

Remove the workstation blade

CAUTION: Do not use the workstation blade release lever to lift or carry the workstation blade. Always support the weight of the workstation blade by handling the chassis directly. Improper use can damage the release lever and the workstation blade.

To remove the component:

1. Identify the proper workstation blade.
2. Power down the workstation blade (on page 14).
3. Remove the workstation blade.

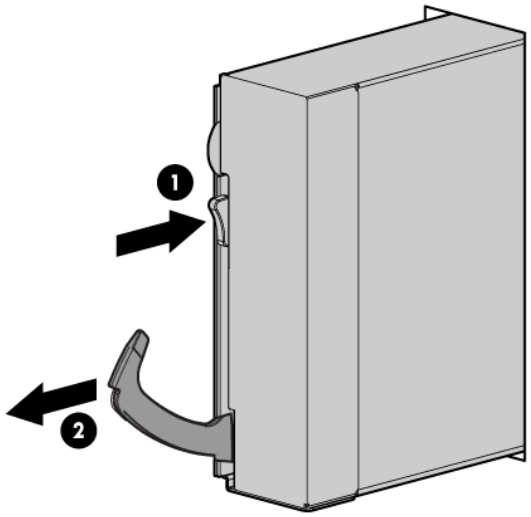

4. Place the workstation blade on a flat, level work surface.

WARNING: To reduce the risk of personal injury from hot surfaces, allow the drives and the internal system components to cool before touching them.

CAUTION: To prevent damage to electrical components, properly ground the workstation blade before beginning any installation procedure. Improper grounding can cause ESD.

Remove the access panel

To remove the component:

1. Power down the workstation blade (on page 14).
2. Remove the workstation blade (on page 15).
3. Lift the access panel latch and slide the access panel to the rear.
4. Remove the access panel.

WARNING: To reduce the risk of personal injury from hot surfaces, allow the drives and the internal system components to cool before touching them.

CAUTION: To prevent damage to electrical components, properly ground the workstation blade before beginning any installation procedure. Improper grounding can cause ESD.

Install the access panel

1. Place the access panel on top of the workstation blade with the hood latch open. Allow the panel to extend past the rear of the workstation blade approximately 0.8 cm (0.2 in).
2. Engage the anchoring pin with the corresponding hole in the latch.
3. Push down on the hood latch. The access panel slides to a closed position.

Remove the DIMM baffle

To remove the component:

1. Power down the workstation blade (on page 14).
2. Remove the workstation blade (on page 15).
3. Remove the access panel (on page 16).
4. Remove the DIMM baffle.

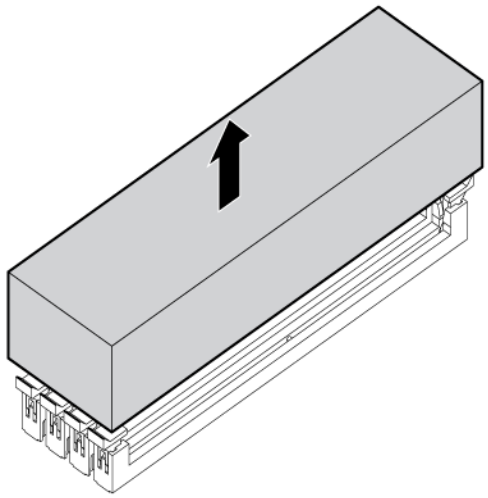

Remove the WS460c Graphics Expansion Blade access panel

To remove the access panel:

1. Lift the access panel latch (1). The access panel slides to the rear (2).
2. Remove the access panel.

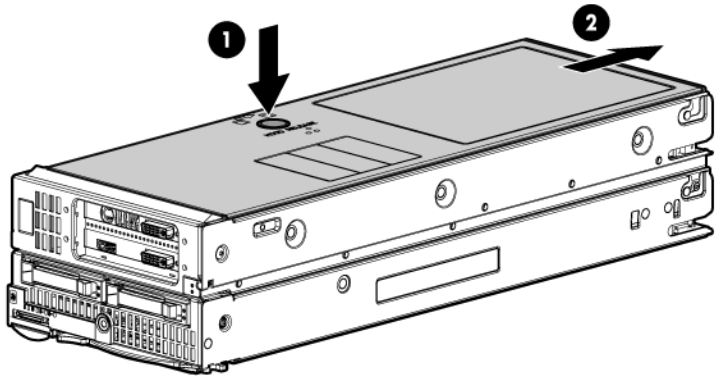

To reinstall the access panel, follow these steps in reverse order.

Remove the WS460c Graphics Expansion Blade

To remove the blade:

1. Remove the WS460c Graphics Expansion Blade access panel (on page 17).
2. Disconnect the four PCIe/SAS cables from the PCIe riser board, noting the location for reinstallation.

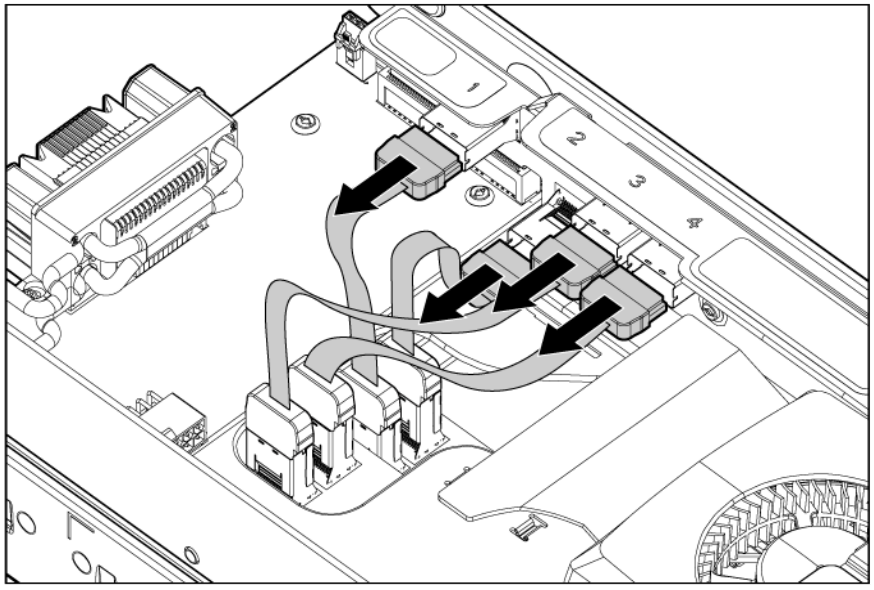

3. Remove the two Torx-15 screws that secure the graphics expansion blade to the workstation blade (1).

4. To remove the graphics expansion blade from the workstation blade, carefully pull up on the front and right sides of the PCIe card cage to disengage it from the anchoring pins on the expansion blade enclosure (1), and then lift the PCIe card cage out of the expansion blade enclosure (2).

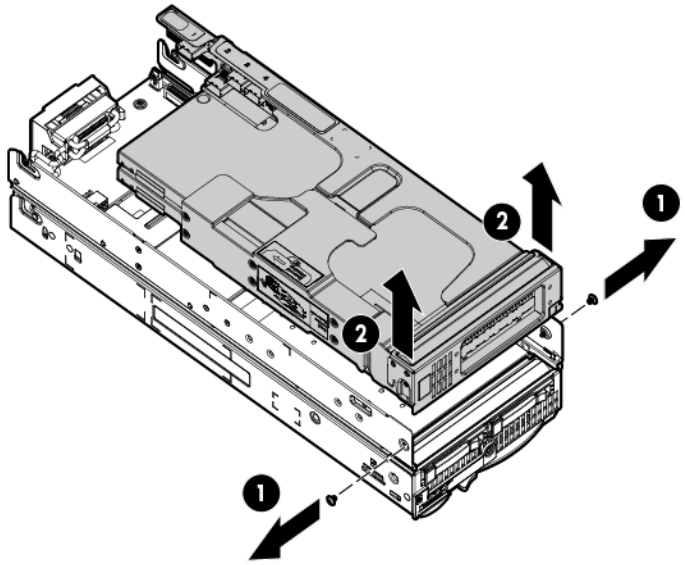

To reinstall the blade, follow these steps in reverse order.

Remove the WS460c Graphics Expansion Blade PCIe card cage

To install another graphics card, you must remove the PCIe card cage from the WS460c Graphics Expansion Blade. To remove the card cage:

1. Remove the WS460c Graphics Expansion Blade access panel (on page 17).
2. Disconnect the four PCIe/SAS cables from the PCIe riser board, noting the location for reinstallation.

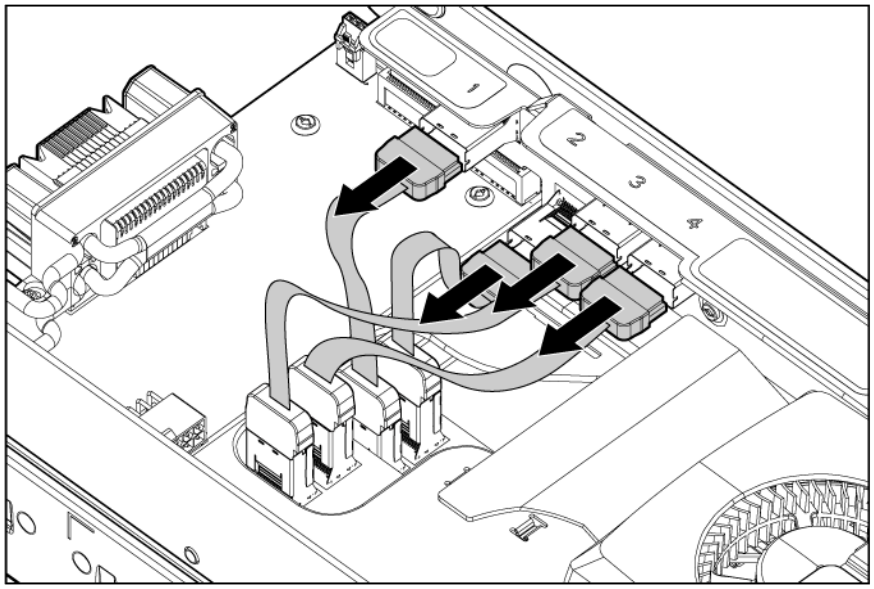

3. If you are removing the graphics card from the PCIe card cage, disconnect the power cables from the graphics board.

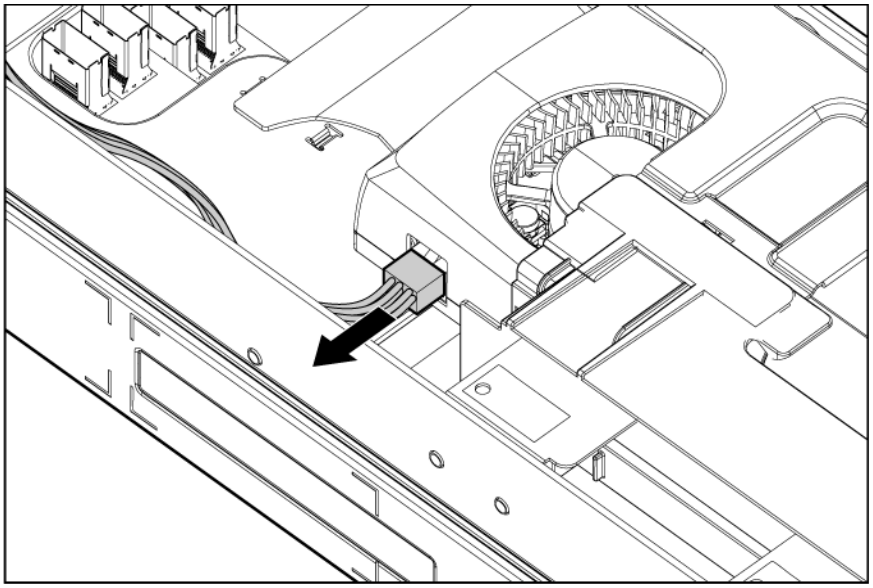

4. Remove the two Torx-15 screws that secure the front of the PCIe card cage (1).
5. Carefully pull up on the front and right sides of the PCIe card cage to disengage it from the anchoring pins on the expansion blade enclosure, and then lift the PCIe card cage out of the expansion blade enclosure (2).

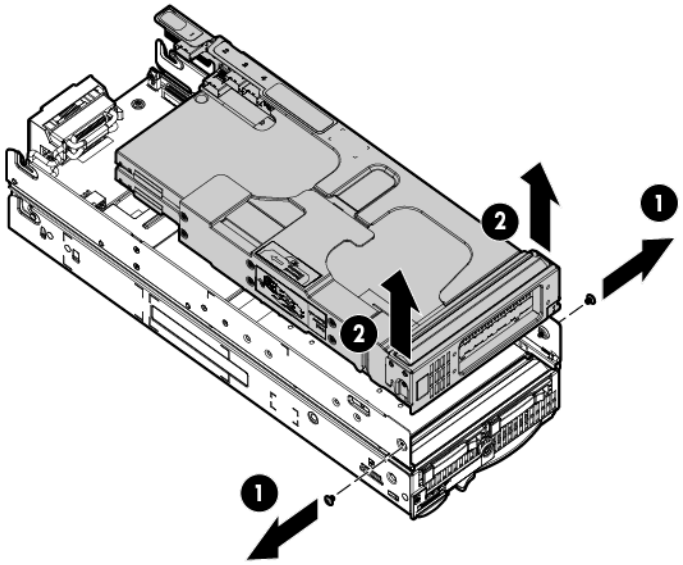

Configure the WS460c Graphics Expansion Blade configuration with HBA

NOTE: This unique configuration is for users who want to use a single mezzanine card with the graphics expansion blade. (For example, using a HBA to connect to storage.) This configuration permits the use of only one PCIe slot on the graphics expansion blade.

1. Place the host bus adapter (1) into mezzanine slot one, and then tighten the screws (2).

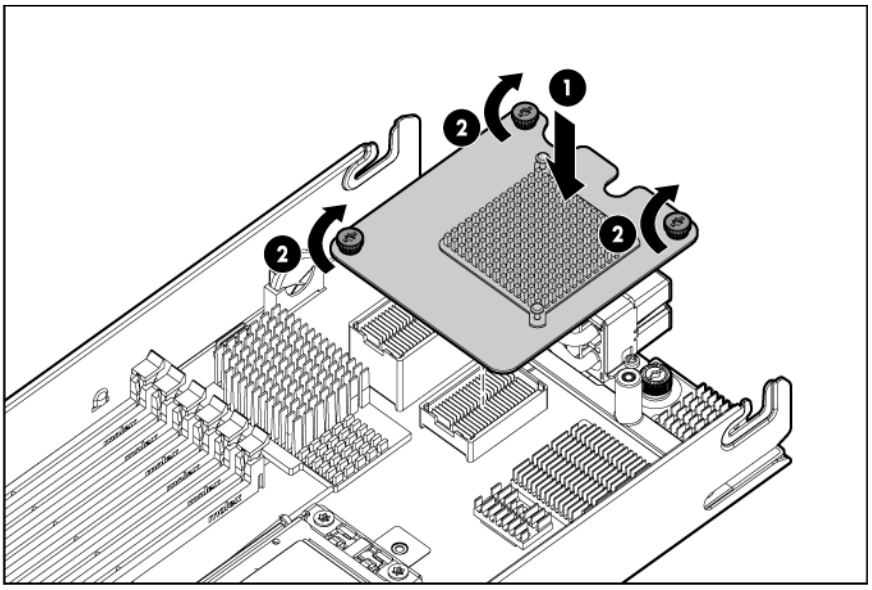

2. Place the expansion cable card (1) into mezzanine slot two, and then tighten the screw (2).

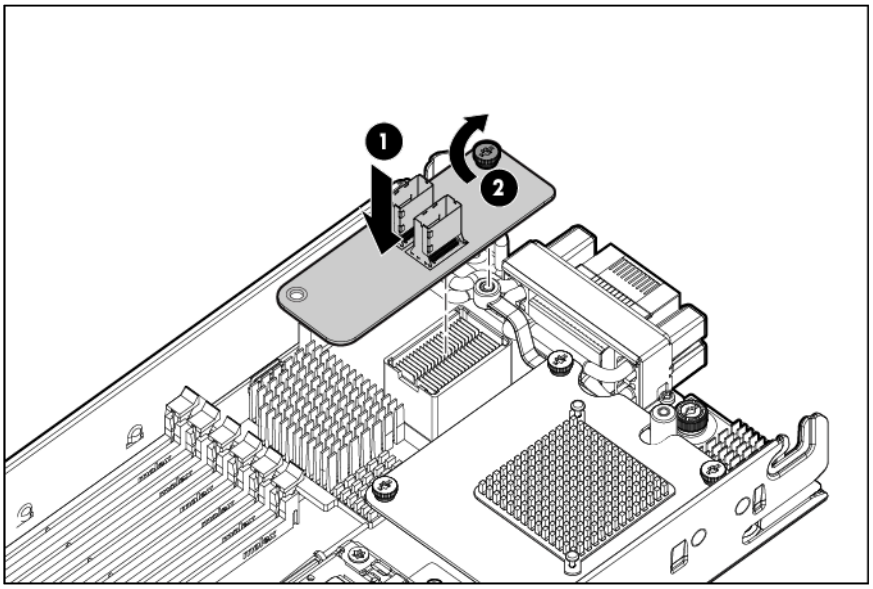

3. Slide the graphics expansion blade onto the workstation blade.

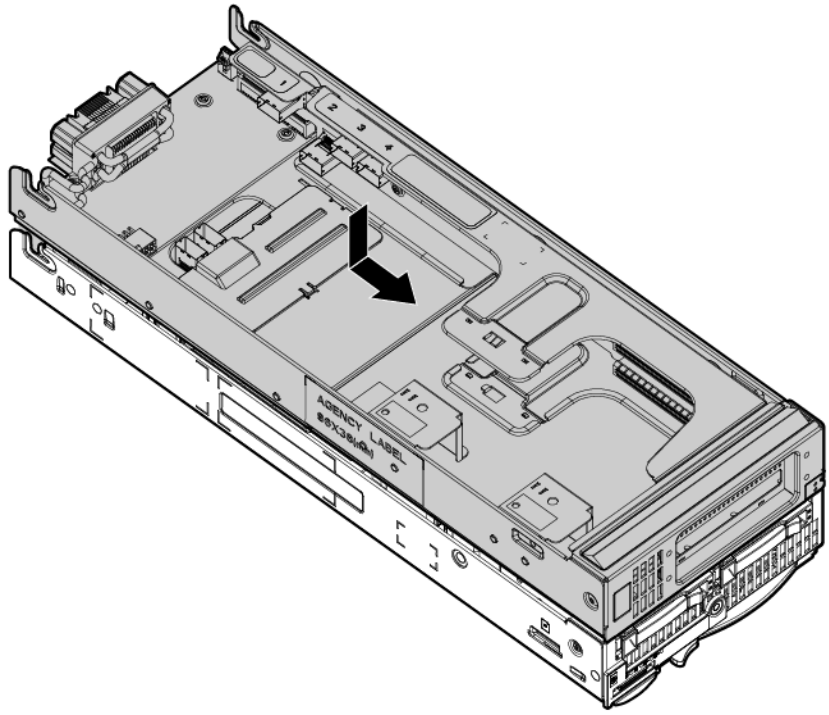

4. Remove the screws (1), and then remove the PCIe slot card (2) from the graphics expansion blade.

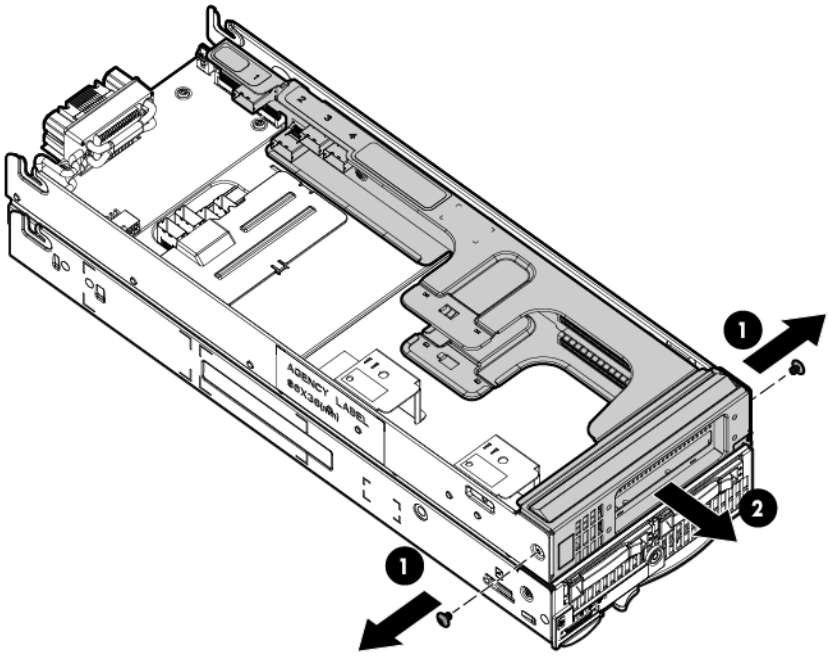

5. Insert the graphic card into PCIe slot one.

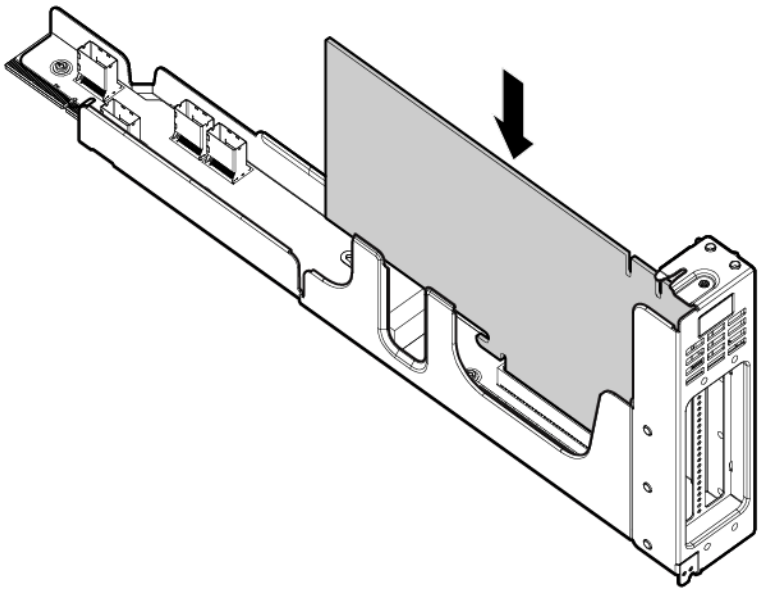

6. Replace the graphic card retainer.

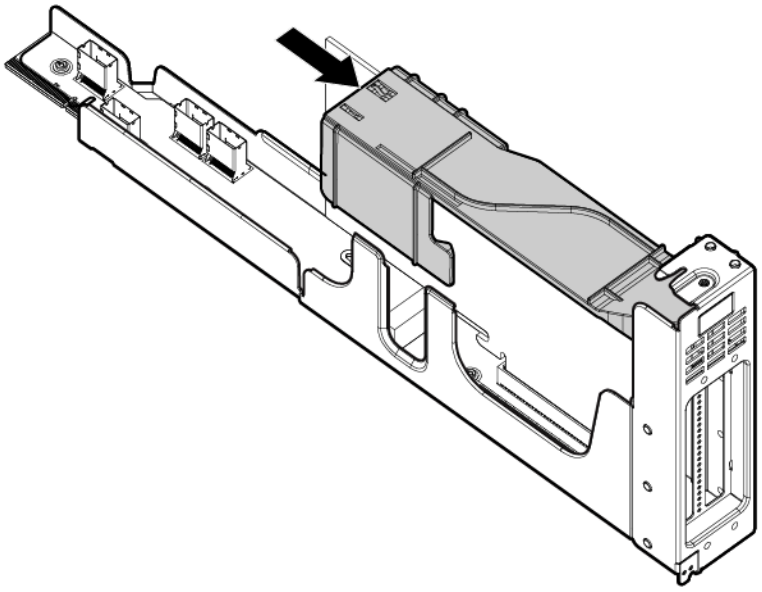

7. Locate the dipswitch on the left side of the PCIe slot card, and then flip switch 2 to ON.

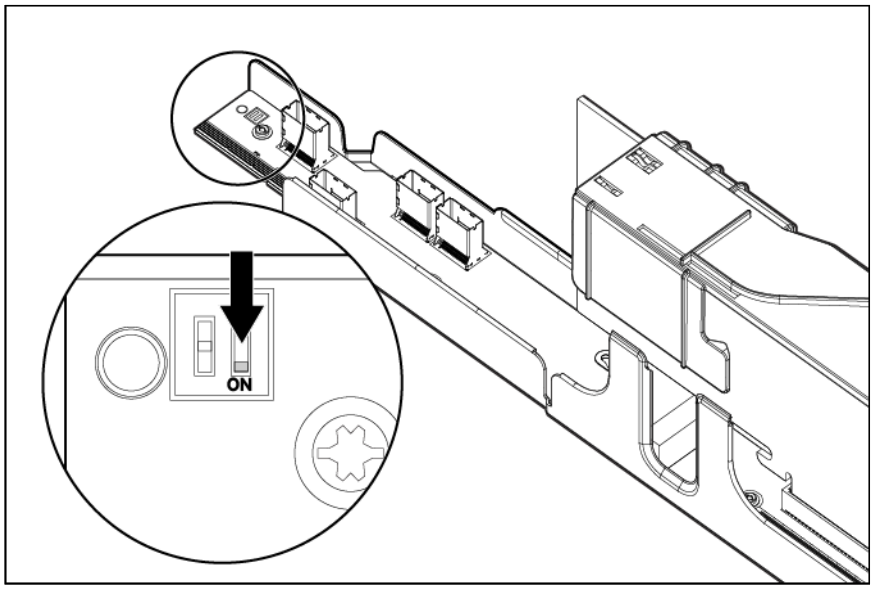

8. Replace the PCIe slot card on the graphics expansion blade (1), and then tighten the screws (2).

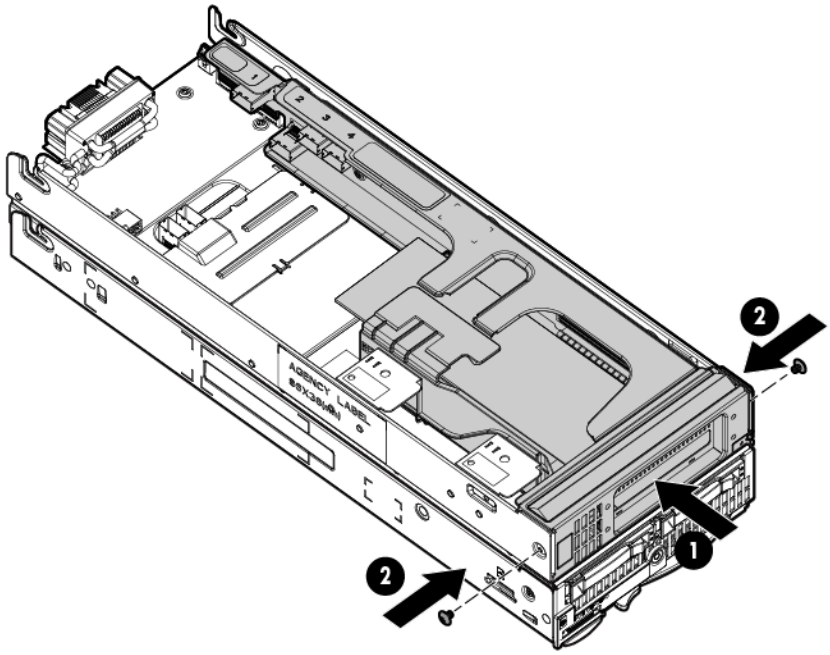

9. Insert the graphic card power cable.

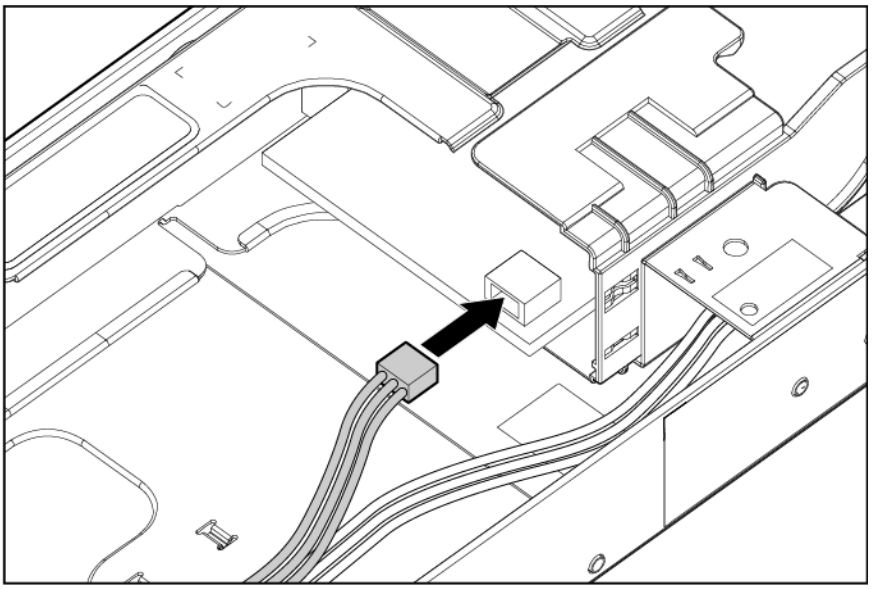

10. Insert cables into the graphic expansion cable mezzanine card.

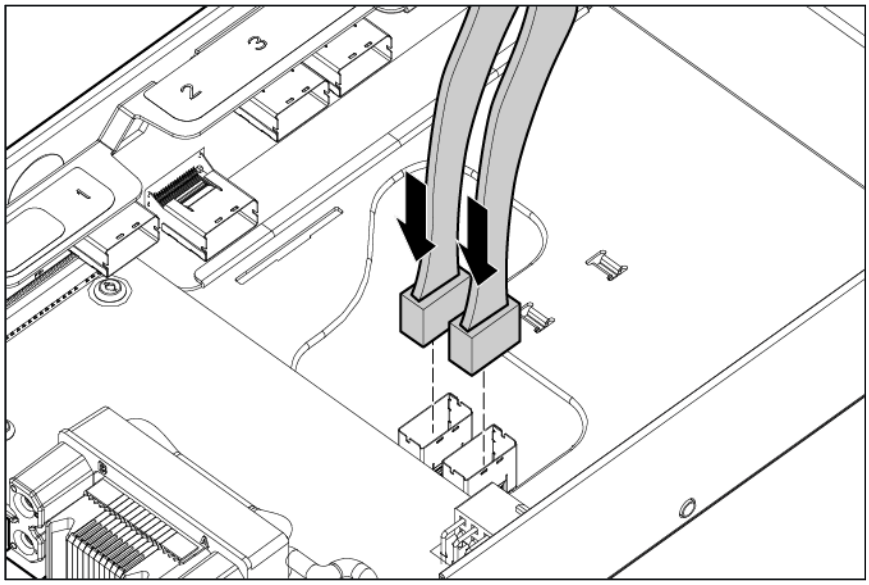

11. Insert cable 4 to slot 2 (1), and then insert cable 3 to slot 1 (2).

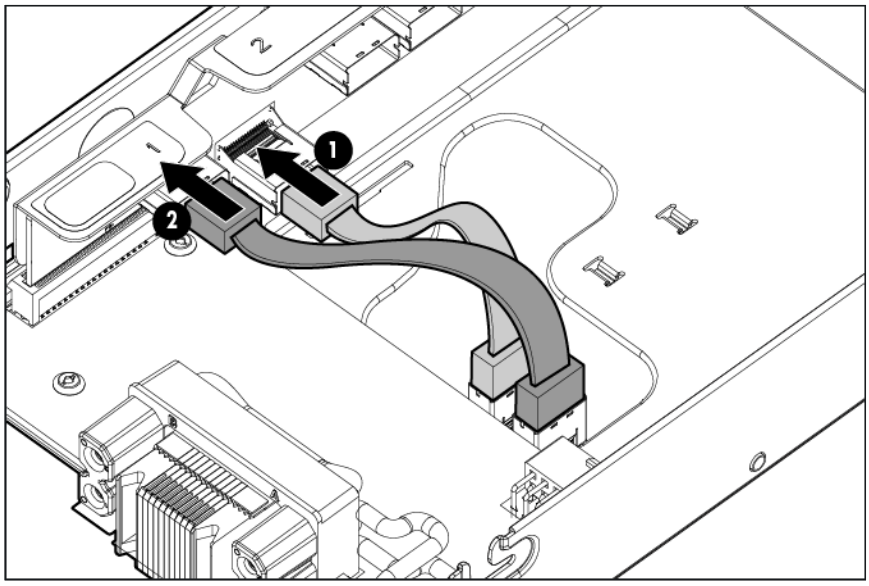

12. Slide the cover onto graphic expansion blade.

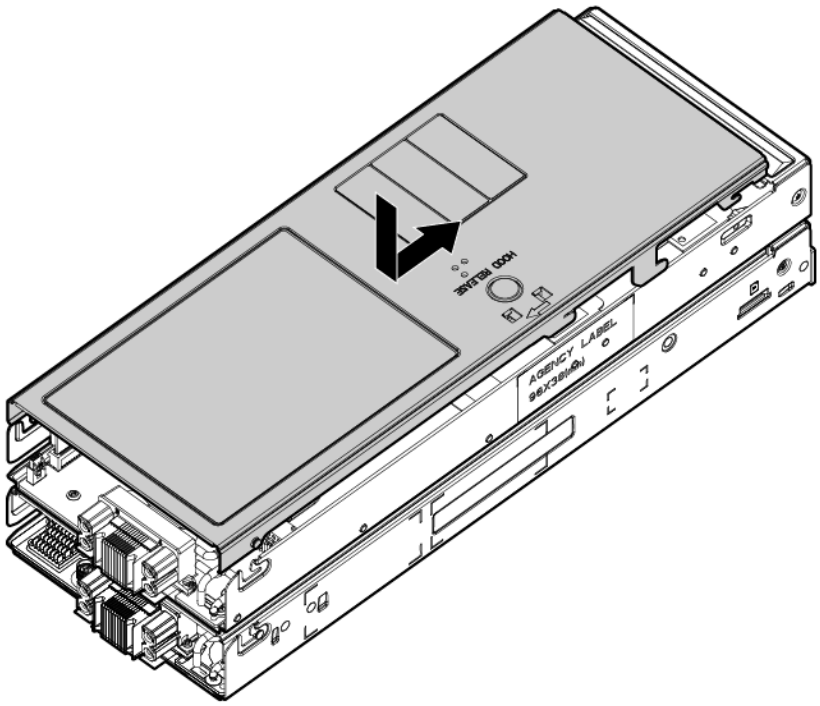

Setup

Overview

Installation of a workstation blade requires the following steps:

1. Install and configure an HP BladeSystem c-Class enclosure.
2. Install any workstation blade options.
3. Install interconnect modules in the enclosure.
4. Connect the interconnect modules to the network.
5. Install a workstation blade.
6. Complete the workstation blade configuration.
7. Install any software as outlined in the workstation blade Windows or Linux Administrator's Guide.

For definitions of the acronyms used in this document, refer to "Acronyms and abbreviations" in the workstation blade user guide.

Installing an HP BladeSystem c-Class enclosure

Before performing any workstation blade-specific procedures, install an HP BladeSystem c-Class enclosure.

The most current documentation for workstation blades and other HP BladeSystem components is available at the HP website (http://www.hp.com/go/bladesystem/documentation).

Documentation is also available in the following locations:

- Documentation CD that ships with the enclosure
- HP website (http://www.hp.com/go/bizsupport)

Installing workstation blade options

Before installing and initializing the workstation blade, install any workstation blade options such as an additional processor, hard drive, or mezzanine card.

The optional Graphics Expansion Blade enables you to take the PCI Express ports that are routed to the mezzanine slots and combine them into an x16 PCI Express bus that is used to connect to a PCI expander port for graphics cards. Through this connection, your system provides the effective rendering of graphics.

The Graphics Expansion Blade comes connected to a WS460c Workstation Blade and can be installed only in an odd-numbered bay.

Connecting to the network

To connect the HP BladeSystem to a network, each enclosure must be configured with network interconnect devices to manage signals between the workstation blades and the external network.

Two types of interconnect modules are available for HP BladeSystem c-Class enclosures: Pass-Thru modules and switch modules. For more information about interconnect module options, see the HP website (http://www.hp.com/go/bladesystem/interconnects).

IMPORTANT: To connect to a network with a Pass-Thru module, always connect the Pass-Thru module to a network device that supports Gigabit speed.

Installing a workstation blade

CAUTION: To prevent improper cooling and thermal damage, do not operate the workstation blade or the enclosure unless all drive and device bays are populated with either a component or a blank.

1. If you are installing a workstation blade, remove a device bay blank as shown in the following figure. If you are installing a workstation blade with the graphics expansion blade, remove two successive device bay blanks.

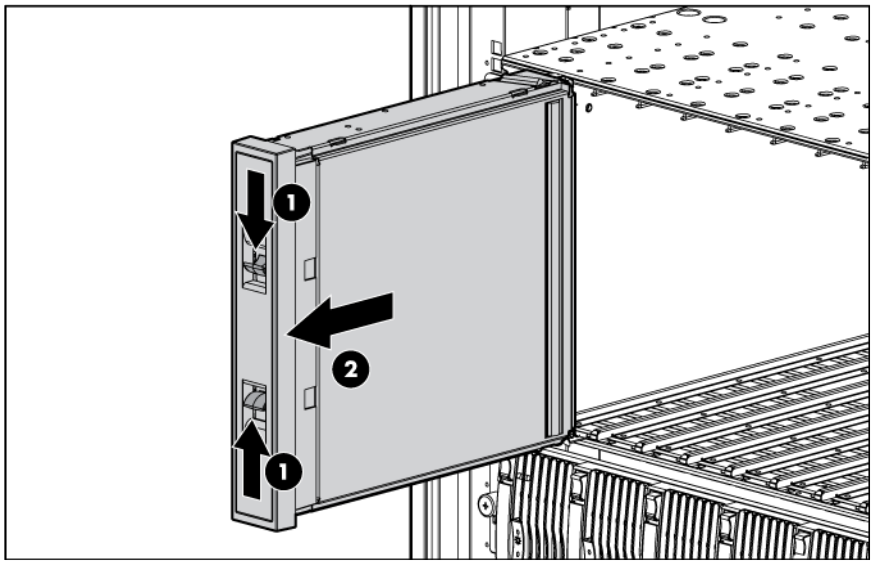

2. If you are installing a workstation blade, remove the enclosure cover as shown in the following figure. If you are installing a workstation blade with the graphics expansion blade, remove the enclosure covers.

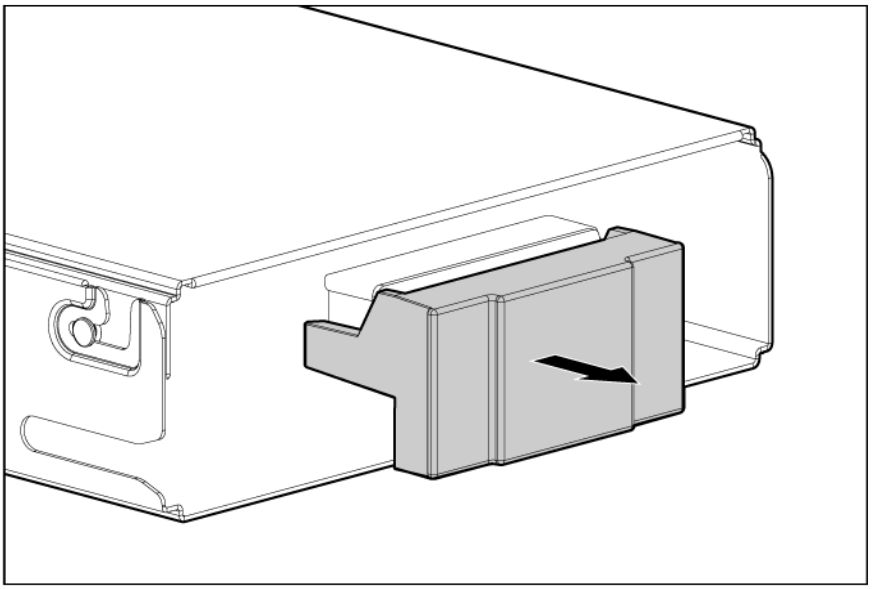

3. If you are installing the workstation blade, prepare it for installation.

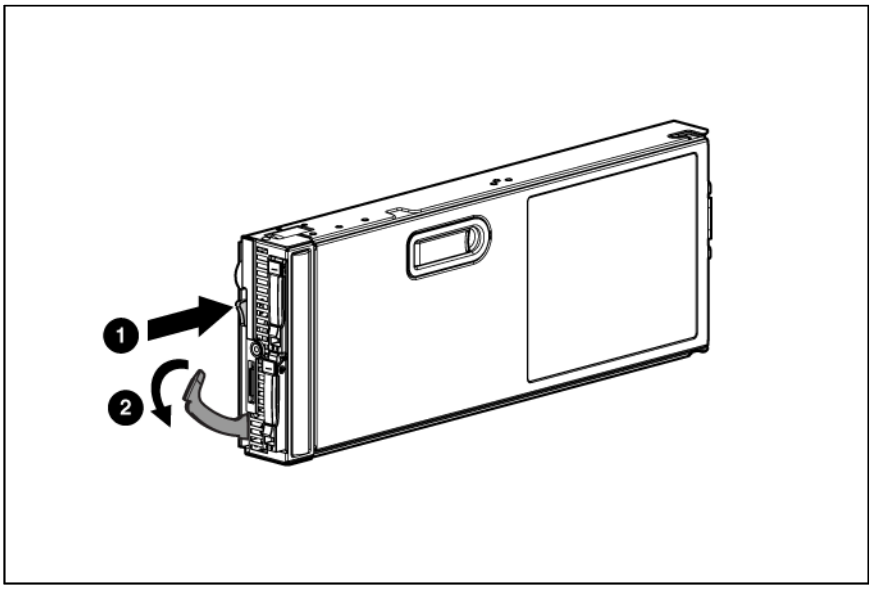

4. If you are installing the workstation blade with the graphics expansion blade, prepare it for installation.

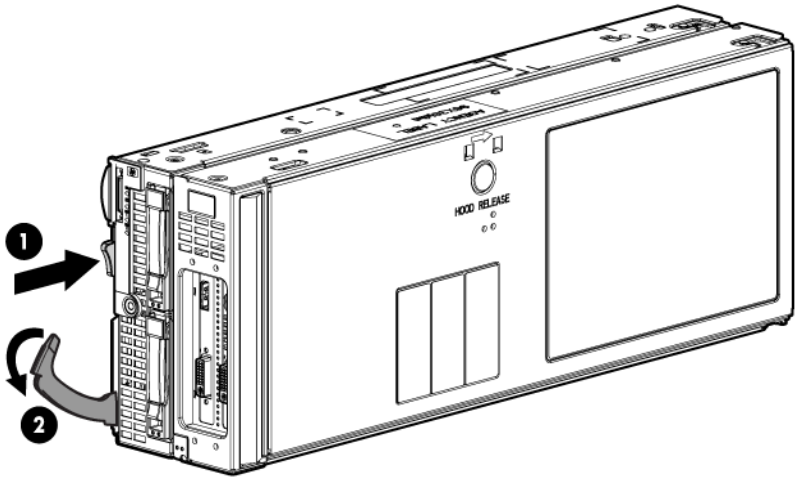

5. Install the workstation blade, as shown in the following figure, or the workstation blade with the graphics expansion blade.

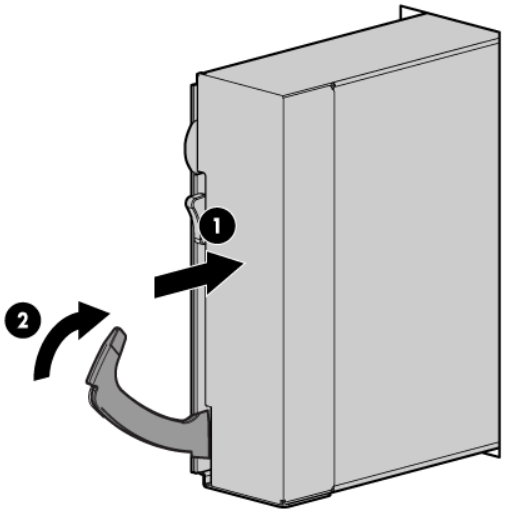

Hardware options installation

Introduction

If more than one option is being installed, read the installation instructions for all the hardware options and identify similar steps to streamline the installation process.

⚠ **WARNING:** To reduce the risk of personal injury from hot surfaces, allow the drives and the internal system components to cool before touching them.

△ **CAUTION:** To prevent damage to electrical components, properly ground the server before beginning any installation procedure. Improper grounding can cause electrostatic discharge.

Hard drive option

The workstation blade supports up to two SAS or SATA drives.

△ **CAUTION:** To prevent improper cooling and thermal damage, do not operate the workstation blade or the enclosure unless all drive and device bays are populated with either a component or a blank.

1. Remove the SAS hard drive blank.

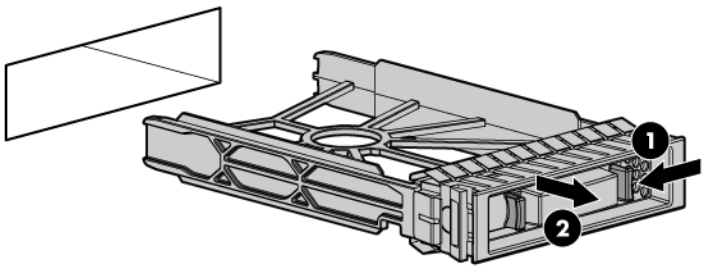

2. Prepare the hard drive.

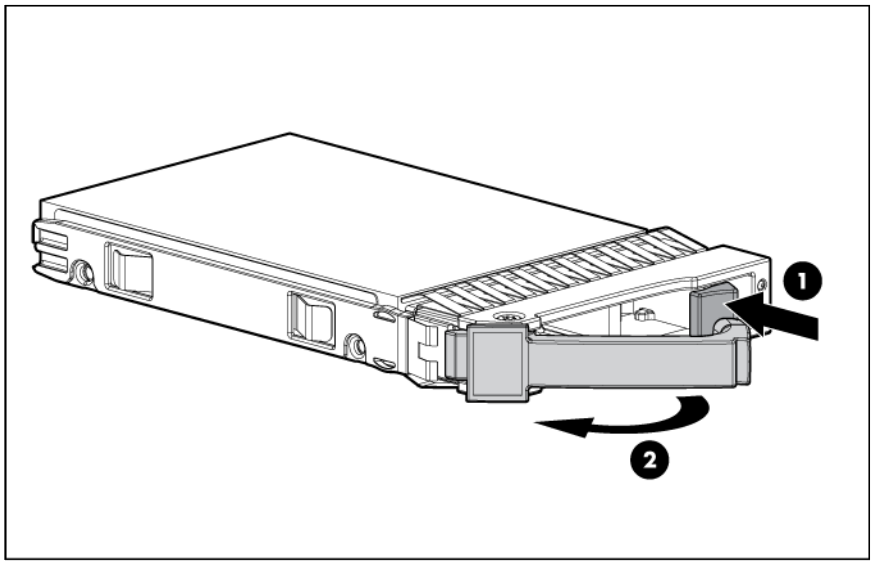

3. Install the hard drive.

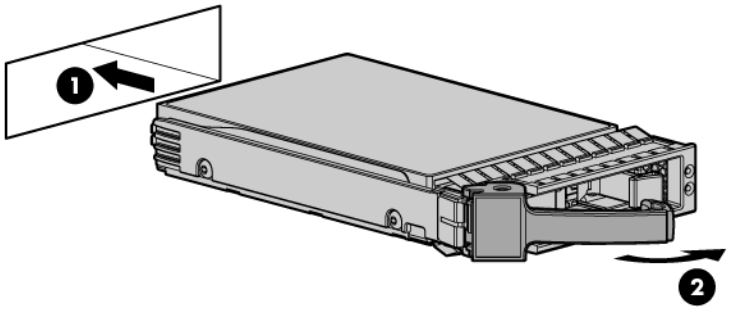

4. Determine the status of the drive from the hot-plug SAS hard drive LED combinations ("SAS and SATA hard drive LED combinations" on page 10).

Processor option

WARNING: To reduce the risk of personal injury from hot surfaces, allow the drives and the internal system components to cool before touching them.

CAUTION: To prevent possible workstation blade malfunction and damage to the equipment, multiprocessor configurations must contain processors with the same part number.

CAUTION: To prevent possible workstation blade overheating, always populate processor socket 2 with a processor and a heatsink or a processor socket cover and a heatsink blank.

CAUTION: The heatsink thermal interface media is not reusable and must be replaced if the heatsink is removed from the processor after it has been installed.

IMPORTANT: When installing the heatsink, align the guide pins on the processor retention bracket with the alignment holes in the heatsink.

IMPORTANT: Processor socket 1 must always be populated. If processor socket 1 is empty, the workstation blade does not power up.

Before installing a processor, you must remove any previously installed WS460c Graphics Expansion Blade access panel and blade.

To install the component:

1. Update the system ROM using any standard ROM flash mechanism.
2. Power down the workstation blade (on page 14).
3. Remove the workstation blade (on page 15).
4. Remove the access panel (on page 16).
5. Remove all DIMM baffles ("Remove the DIMM baffle" on page 16).
6. Remove the heatsink blank. Retain the heatsink blank for future use.

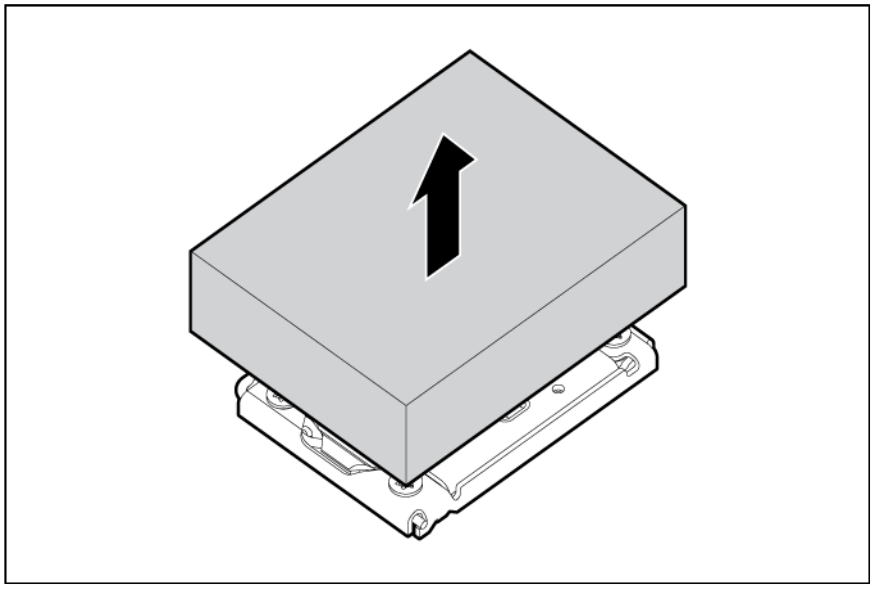

CAUTION: Failure to completely open the processor locking lever prevents the processor from seating during installation, leading to hardware damage.

7. Open the processor locking lever and the processor socket retaining bracket. **Do not remove the processor socket cover**.

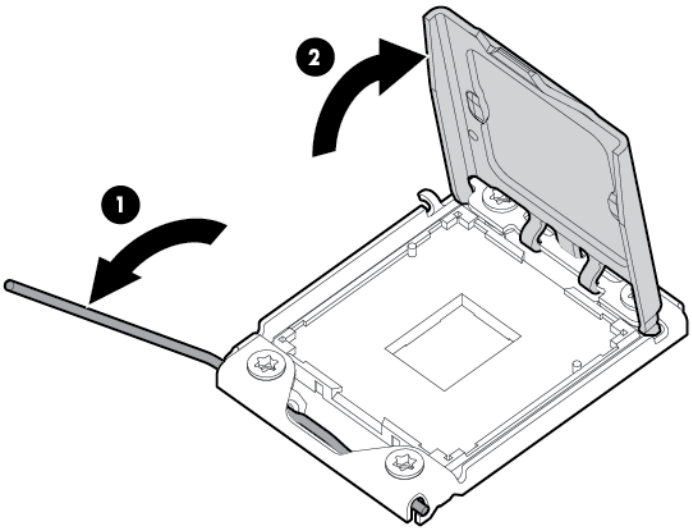

IMPORTANT: Be sure the processor remains inside the processor installation tool.

8. If the processor has separated from the installation tool, carefully re-insert the processor in the tool. Handle the processor by the edges only, and do not touch the bottom of the processor, especially the contact area.

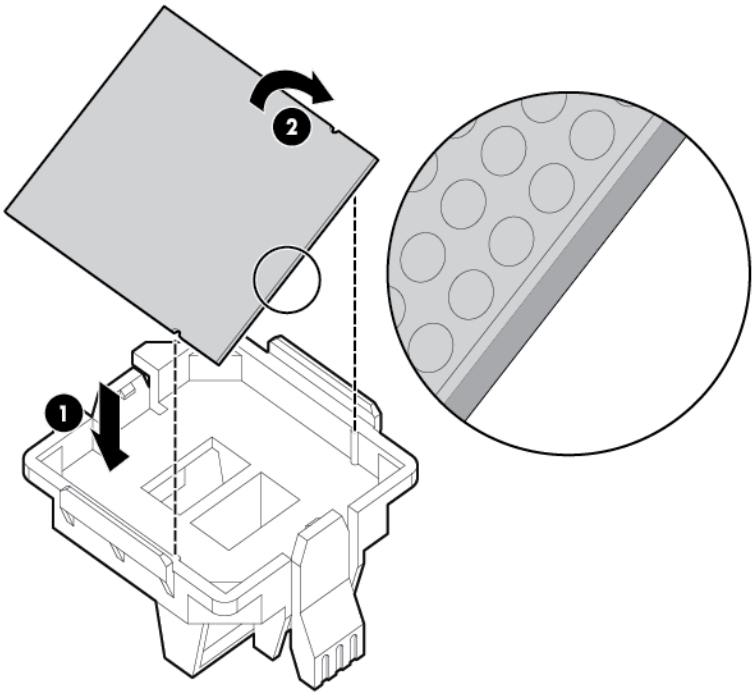

9. Align the processor installation tool with the socket, and then install the processor. **THE PINS ON THE SYSTEM BOARD ARE VERY FRAGILE AND EASILY DAMAGED**.

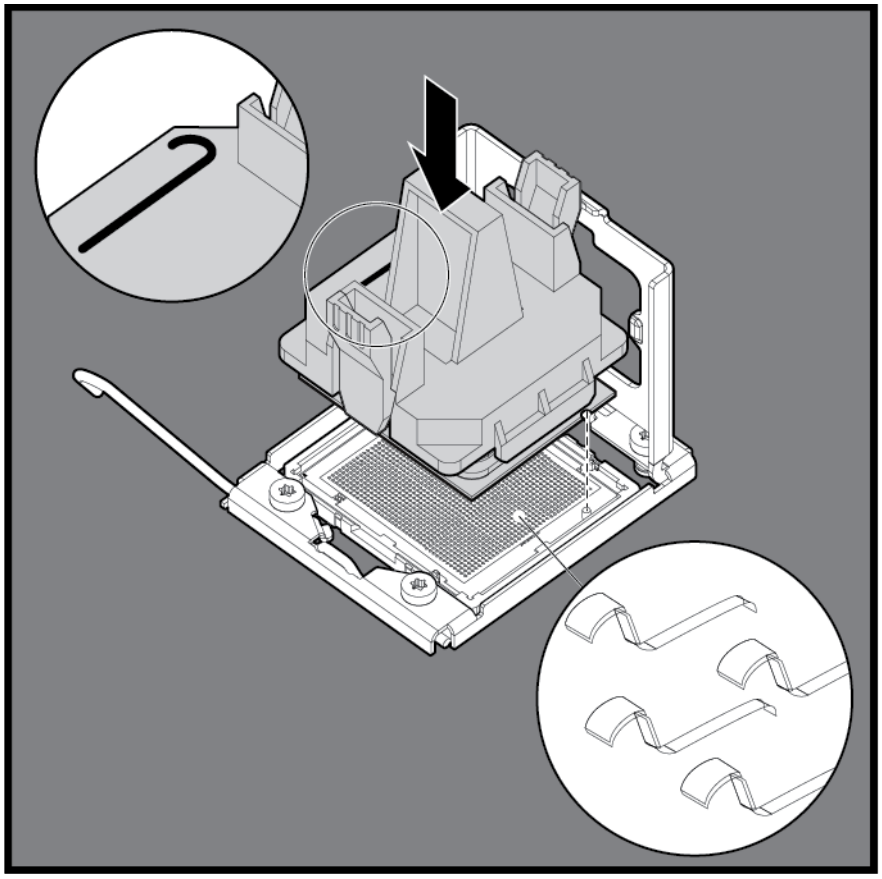

△ **CAUTION: THE PINS ON THE SYSTEM BOARD ARE VERY FRAGILE AND EASILY DAMAGED.** To avoid damage to the system board:

- Never install or remove a processor without using the processor installation tool.
- Do not touch the processor socket contacts.
- Do not tilt or slide the processor when lowering the processor into the socket.

10. Press the tabs on the processor installation tool to separate it from the processor, and then remove the tool.

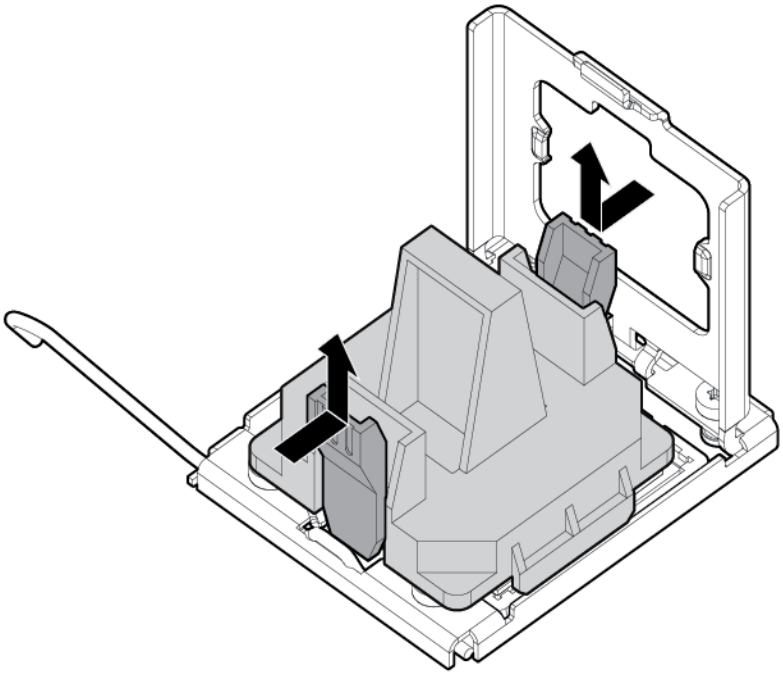

11. Close the processor socket retaining bracket and the processor locking lever. **The processor socket cover is automatically ejected**. Remove the cover.

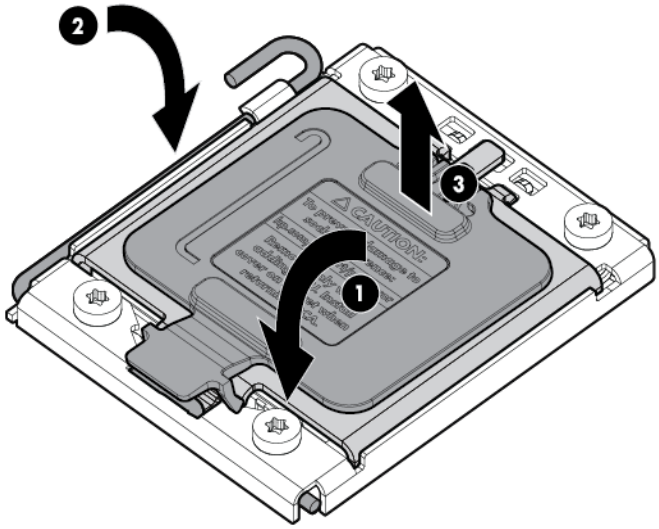

△ **CAUTION:** Be sure to close the processor socket retaining bracket before closing the processor locking lever. The lever should close without resistance. Forcing the lever closed can damage the processor and socket, requiring system board replacement.

12. (Optional) Reinstall the WS460c Graphics Expansion Blade ("Remove the WS460c Graphics Expansion Blade" on page 17), and then the access panel ("Remove the WS460c Graphics Expansion Blade access panel" on page 17).

Memory options

IMPORTANT: This workstation blade does not support mixing RDIMMs and UDIMMs. Attempting to mix these two types causes the server to halt during BIOS initialization.

The memory subsystem in this workstation blade can support RDIMMs or UDIMMs. Both types are referred to as DIMMs when the information applies to both types. When specified as RDIMM or UDIMM, the information applies to that type only. All memory installed in the workstation blade must be the same type.

The workstation blade supports the following DIMM speeds:

- Single- and dual-rank PC3-10600 (DDR-1333) DIMMs operating at 1333 and 1066 MHz
- Quad-rank PC3-8500 (DDR-1067) DIMMs operating at 1066 MHz

Depending on the processor model, the number of DIMMs installed, and whether UDIMMs or RDIMMs are installed, the memory clock speed may be reduced to 1066 or 800 MHz. For more information on the effect of DIMM slot population, see "General DIMM slot population guidelines (on page 39)."

Memory subsystem architecture

The memory subsystem in this workstation blade is divided into channels. Each processor supports three channels, and each channel supports two DIMM slots, as shown in the following table.

Channel	Slot	Slot number
1	D A	1 2
2	E B	3 4
3	F C	5 6

This multi-channel architecture provides enhanced performance in Advanced ECC mode. This architecture also enables the Mirrored Memory and Lockstep memory modes. This workstation blade supports both Registered PC3 DIMMs (RDIMMs) and Unbuffered DIMMs (UDIMMs).

DIMM slots in this server are identified by number and by letter. Letters identify the slots to populate for specific AMP modes. Slot numbers are reported by ROM messages during boot and for error reporting.

Single-, dual-, and quad-rank DIMMs

To understand and configure memory protection modes properly, an understanding of single-, dual-, and quad-rank DIMMs is helpful. Some DIMM configuration requirements are based on these classifications.

A single-rank DIMM has one set of memory chips that is accessed while writing to or reading from the memory. A dual-rank DIMM is similar to having two single-rank DIMMs on the same module, with only one rank accessible at a time. A quad-rank DIMM is, effectively, two dual-rank DIMMs on the same module. Only one rank is accessible at a time. The workstation blade memory control subsystem selects the proper rank within the DIMM when writing to or reading from the DIMM.

Dual- and quad-rank DIMMs provide the greatest capacity with the existing memory technology. For example, if current DRAM technology supports 2-GB single-rank DIMMs, a dual-rank DIMM would be 4-GB, and a quad-rank DIMM would be 8-GB.

DIMM identification

To determine DIMM characteristics, use the label attached to the DIMM and the following illustration and table.

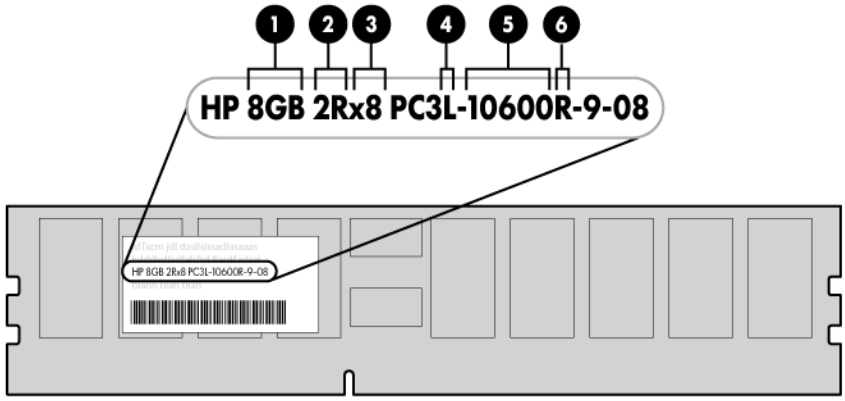

Item	Description	Definition
1	Size	—
2	Rank	1R = Single-rank 2R = Dual-rank 4R = Quad-rank
3	Data width	x4 = 4-bit x8 = 8-bit
4	Voltage rating	L = Low voltage (1.35v) Blank or omitted = Standard
5	Memory speed	10600 = 1333-MHz 8500 = 1066-MHz
6	DIMM type	R = RDIMM (registered) E = UDIMM (unbuffered with ECC)

For the latest supported memory information, see the QuickSpecs on the HP website (http://www.hp.com).

Memory configurations

To optimize workstation blade availability, the workstation blade supports the following AMP modes:

- Advanced ECC—provides the greatest memory capacity for a given DIMM size, while providing up to 4-bit error correction. This mode is the default option for this workstation blade.
- Mirrored Memory—provides maximum protection against failed DIMMs. Uncorrectable errors in one channel are corrected by the mirror channel.
- Lockstep—provides enhanced protection while making all installed memory available to the operating system. The workstation blade can continue to function if a single- or multi-bit memory failure within a single DRAM device occurs.

Advanced Memory Protection options are configured in RBSU. If the requested AMP mode is not supported by the installed DIMM configuration, the workstation blade boots in Advanced ECC mode. For more information, see "HP ROM-Based Setup Utility (on page 56)."

For the latest memory configuration information, see the QuickSpecs on the HP website (http://www.hp.com).

RDIMM maximum memory configurations

The following table lists the maximum memory configuration possible with 8-GB RDIMMs.

Rank	Single-processor	Dual-processor
Single-rank	48 GB	96 GB
Dual-rank	48 GB	96 GB
Quad-rank	32 GB	64 GB

UDIMM maximum memory configurations

The workstation blade supports a maximum of 12 GB with one processor and 24 GB with two processors using 2-GB single- or dual-rank UDIMMs.

Advanced ECC memory configuration

Advanced ECC memory is the default memory protection mode for this workstation blade. Standard ECC can correct single-bit memory errors and detect multi-bit memory errors. When multi-bit errors are detected using Standard ECC, the error is signaled to the workstation blade and causes the workstation blade to halt.

Advanced ECC protects the workstation blade against some multi-bit memory errors. Advanced ECC can correct both single-bit memory errors and 4-bit memory errors if all failed bits are on the same DRAM device on the DIMM.

Advanced ECC provides additional protection over Standard ECC because it is possible to correct certain memory errors that would otherwise be uncorrected and result in a workstation blade failure. The workstation blade provides notification that correctable error events have exceeded a pre-defined threshold rate.

Mirrored memory configuration

Mirroring provides protection against uncorrected memory errors that would otherwise result in workstation blade downtime. Mirroring is performed at the channel level. Channels 1 and 2 are used; channel 3 is not populated.

Data is written to both memory channels. Data is read from one of the two memory channels. If an uncorrectable error is detected in the active memory channel, data is retrieved from the mirror channel. This channel becomes the new active channel, and the system disables the channel with the failed DIMM.

Lockstep memory configuration

Lockstep mode provides protection against multi-bit memory errors that occur on the same DRAM device. Lockstep mode can correct any single DRAM device failure on x4 and x8 DIMM types. The DIMMs in each channel must have identical HP part numbers.

Lockstep mode uses channel 1 and channel 2. Channel 3 is not populated. Because channel 3 cannot be populated when using Lockstep mode, the maximum memory capacity is lower than Advanced ECC mode. Memory performance with Advanced ECC is also slightly higher.

General DIMM slot population guidelines

Observe the following guidelines for all AMP modes:

- Populate DIMM slots for a processor only if the processor is installed.
- To maximize performance in multi-processor configurations, distribute the total memory capacity between all processors as evenly as possible.
- Do not mix Unbuffered and Registered PC3 DIMMs.
- Each channel supports up to two Unbuffered DIMMs.
- If quad-rank DIMMs are installed for a processor, a maximum of two DIMMs can be installed on each channel for that processor.

If a channel contains quad-rank DIMMs, the quad-rank DIMM must be installed first on that channel.

DIMM speeds are supported as indicated in the following table.

Populated slots (per channel)	Rank	Speeds supported (MHz)
1	Single- or dual-rank	1333, 1066
1	Quad-rank	1066
2	Single- or dual-rank	1066

Advanced ECC population guidelines

For Advanced ECC mode configurations, observe the following guidelines:

- Observe the general DIMM slot population guidelines (on page 39).
- DIMMs may be installed individually.

Single-processor Advanced ECC population order

For Advanced ECC mode configurations with a single processor, populate the DIMM slots in the following order:

- RDIMM: Sequentially in alphabetical order (A through F)
- UDIMM: Sequentially in alphabetical order (A through F).

Multi-processor Advanced ECC population order

For Advanced ECC mode configurations with multiple processors, populate the DIMM slots for each processor in the following order:

- RDIMM: Sequentially in alphabetical order (A through F)
- UDIMM: Sequentially in alphabetical order (A through F).

Mirrored Memory population guidelines

For Mirrored Memory mode configurations, observe the following guidelines:

- Observe the general DIMM slot population guidelines (on page 39).

- Always install DIMMs in channels 1 and 2 for each installed processor.
- Do not install DIMMs in channel 3 for any processor.
- DIMMs installed on channel 1 and channel 2 of an installed processor must be identical.
- In multi-processor configurations, each processor must have a valid Mirrored Memory configuration.
- In multi-processor configurations, each processor may have a different valid Mirrored Memory configuration.

Single-processor Mirrored Memory population order

For Mirrored Memory mode configurations with a single processor, populate the DIMM slots in the following order:

- RDIMM
  - First: A and B
  - Next: D and E
  - Do not populate slots C or F.
- UDIMM
  - First: A and B
  - Last: D and E
  - Do not populate slots C or F.

After installing the DIMMs, use RBSU to configure the system for Mirrored Memory support ("Configuring mirrored memory" on page 58).

Multi-processor Mirrored Memory population order

For Mirrored Memory mode configurations with multiple processors, populate the DIMM slots for each processor in the following order:

- RDIMM
  - First: A and B
  - Next: D and E
  - Do not populate slots C or F.
- UDIMM
  - First: A and B
  - Last: D and E
  - Do not populate slots C or F.

After installing the DIMMs, use RBSU to configure the system for mirrored memory support ("Configuring mirrored memory" on page 58).

Lockstep Memory population guidelines

For Lockstep memory mode configurations, observe the following guidelines:

- Observe the general DIMM slot population guidelines (on page 39).
- Always install DIMMs in channels 1 and 2 for each installed processor.

- Do not install DIMMs in channel 3 for any processor.
- DIMM configuration on channel 1 and channel 2 of a processor must be identical.
- In multiprocessor configurations, each processor must have a valid Lockstep Memory configuration.
- In multiprocessor configurations, each processor may have a different valid Lockstep Memory configuration.

Single-processor Lockstep population order

For Lockstep memory mode configurations with a single processor, populate the DIMM slots in the following order:

- RDIMM
  - First: A and B
  - Next: D and E
  - Do not populate slots C or F.
- UDIMM
  - First: A and B
  - Last: D and E
  - Do not populate slots C or F.

After installing the DIMMs, use RBSU to configure the system for Lockstep memory support ("Configuring lockstep memory" on page 58).

Multi-processor Lockstep population order

For Lockstep memory mode configurations with multiple processors, populate the DIMM slots for each processor in the following order:

- RDIMM
  - First: A and B
  - Next: D and E
  - Do not populate slots C or F.
- UDIMM
  - First: A and B
  - Last: D and E
  - Do not populate slots C or F.

After installing the DIMMs, use RBSU to configure the system for Lockstep memory support ("Configuring lockstep memory" on page 58).

Installing a DIMM

CAUTION: To avoid damage to the hard drives, memory, and other system components, the air baffle, drive blanks, and access panel must be installed when the server is powered up.

Before installing a DIMM, you must remove any previously installed WS460c Graphics Expansion Blade access panel and blade ("Remove the WS460c Graphics Expansion Blade" on page 17).

To install a DIMM:

1. Power down the server ("Power down the workstation blade" on page 14).
2. Remove the workstation blade (on page 15).
3. Remove the access panel (on page 16).
4. Remove all DIMM baffles ("Remove the DIMM baffle" on page 16).
5. Open the DIMM slot latches.
6. Install the DIMM.

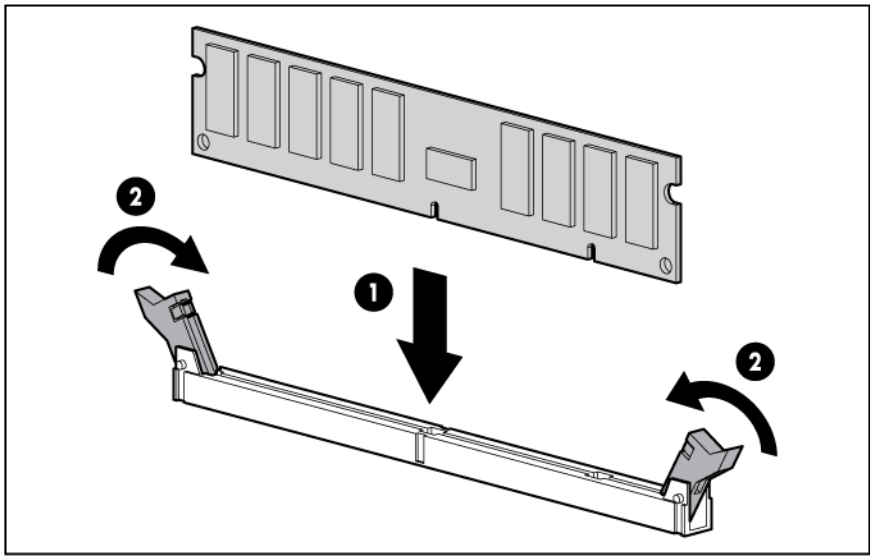

7. Install all DIMM baffles.
8. Install the access panel (on page 16).

If you are installing DIMMs in a mirrored or lock-step configuration, configure this mode in RBSU ("HP ROM-Based Setup Utility" on page 56).

If necessary, reinstall the WS460c Graphics Expansion Blade and the access panel.

Cache module and battery pack option

The BBWC enabler option enables the system to save and store data in the event of an unexpected system shutdown.

Before installing the BBWC enabler, you must remove any previously installed WS460c Graphics Expansion Blade access panel ("Remove the WS460c Graphics Expansion Blade access panel" on page 17) and blade ("Remove the WS460c Graphics Expansion Blade" on page 17).

To install cache module and battery option:

1. Back up all data on the hard drive.
2. Power down the workstation blade (on page 14).
3. Remove the workstation blade ("Remove the WS460c Graphics Expansion Blade" on page 17).
4. Remove the access panel ("Remove the WS460c Graphics Expansion Blade access panel" on page 17).

5. Remove hard drives.
6. Remove the hard drive backplane.

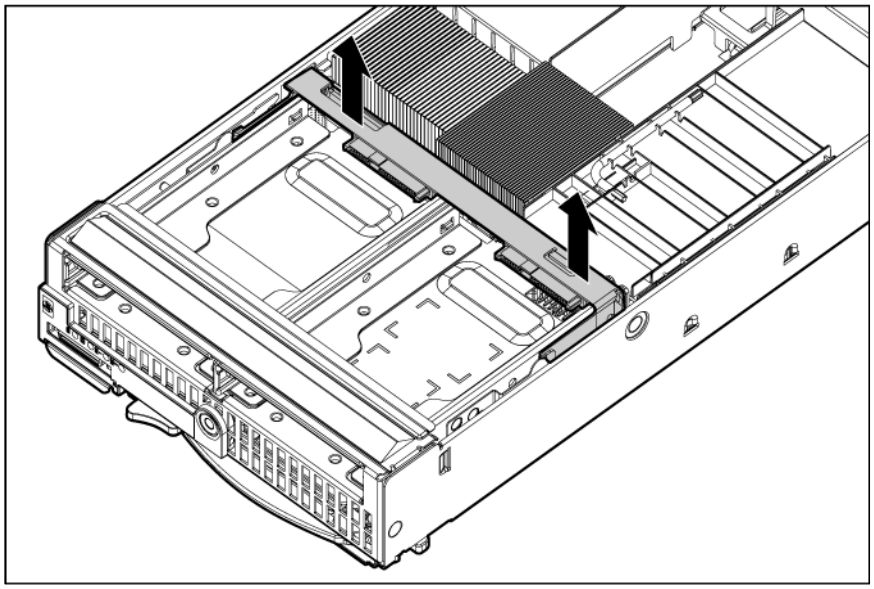

7. Remove the two T-15 screws from the front panel and hard drive cage assembly.
8. Remove the front panel and hard drive cage assembly.

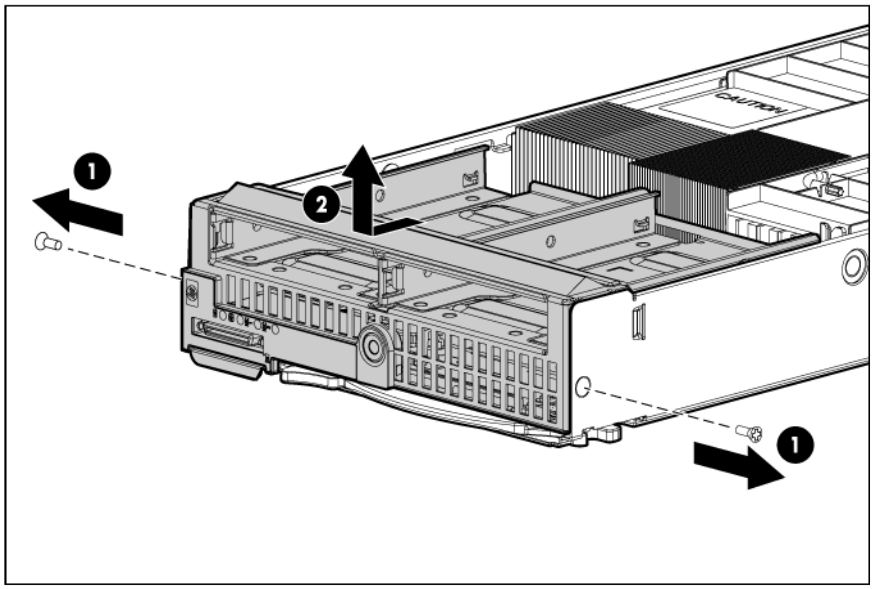

9. Connect the BBWC battery pack cable to the cache module.

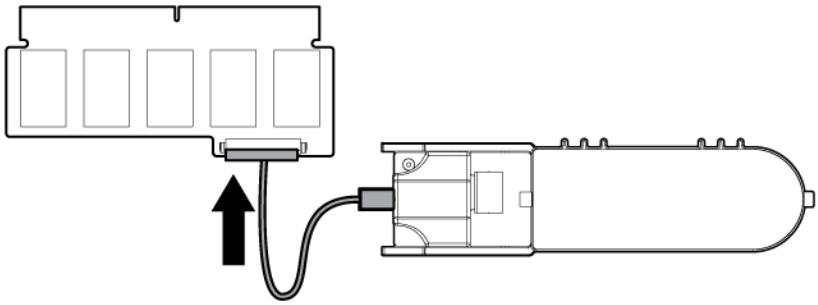

10. Install the cache module.

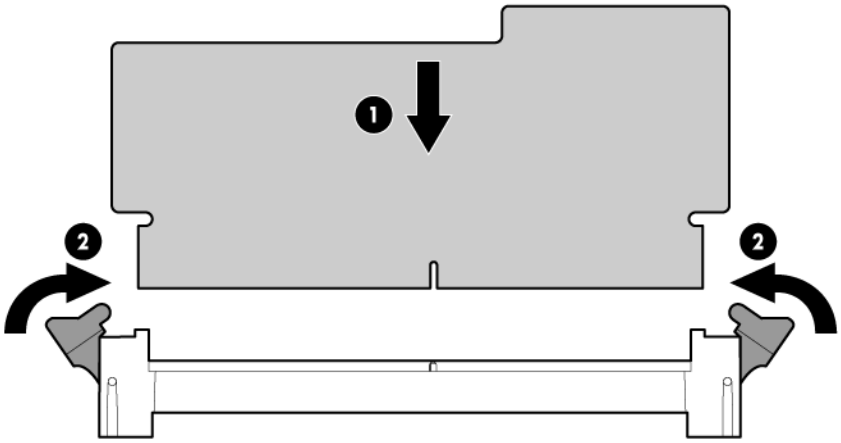

11. Route the BBWC battery pack cable.

12. Install the battery pack.

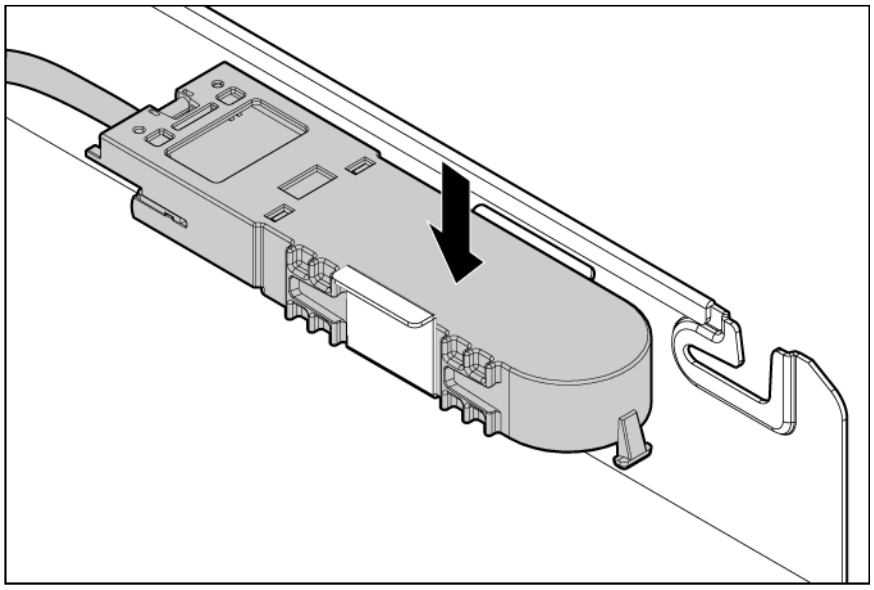

13. Install the front panel and hard drive cage assembly.
14. Install the two T-15 screws to secure the front panel and hard drive cage assembly to the chassis.

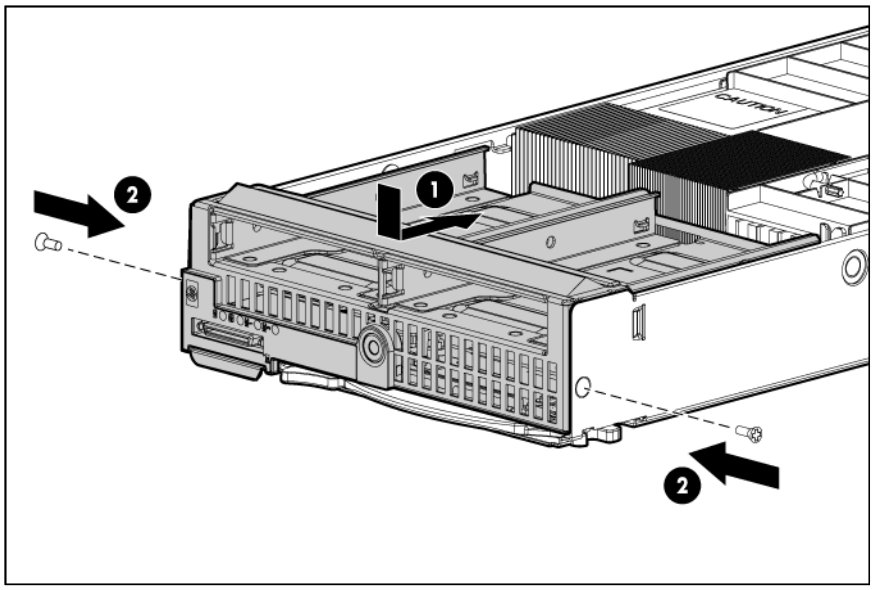

15. Install the hard drive backplane. Press down on the hard drive backplane retainer to seat the board.

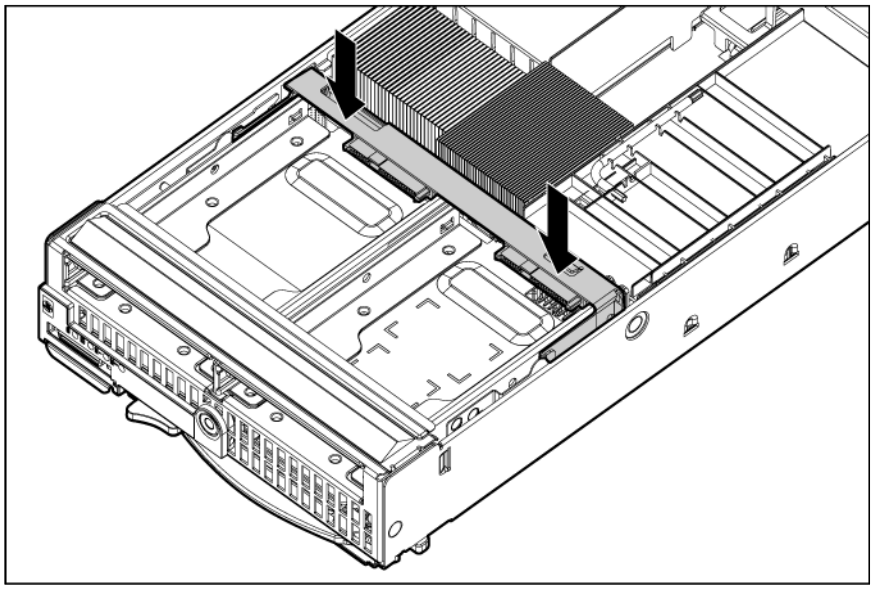

16. Install the hard drives.
17. Install the access panel.
18. If necessary, reinstall the WS460c Graphics Expansion Blade ("Remove the WS460c Graphics Expansion Blade" on page 17) and the access panel ("Remove the WS460c Graphics Expansion Blade access panel" on page 17).

Cabling

BBWC battery pack cabling

- Cache module cabling: Use the 24-inch BBWC battery pack cable.



Using the HP c-Class Blade SUV Cable

The HP c-Class Blade SUV Cable enables the user to perform workstation blade administration, configuration, and diagnostic procedures by connecting video and USB devices directly to the workstation blade. For SUV cable connectors, see "HP c-Class Blade SUV Cable (on page 13)."

Connecting locally to a server blade with video and USB devices

Use the SUV cable to connect a monitor and any of the following USB devices:

- USB hub
- USB keyboard
- USB mouse
- USB CD/DVD-ROM drive
- USB diskette drive

Numerous configurations are possible. This section offers two possible configurations. For more information, see "USB support and functionality (on page 62)."

Accessing a server blade with local KVM

For this configuration, a USB hub is not necessary. To connect additional devices, use a USB hub.

CAUTION: Before disconnecting the SUV cable from the connector, always squeeze the release buttons on the sides of the connector. Failure to do so can result in damage to the equipment.

1. Connect the SUV cable to the workstation blade.
2. Connect the video connector to a monitor.
3. Connect a USB mouse to one USB connector.
4. Connect a USB keyboard to the second USB connector.

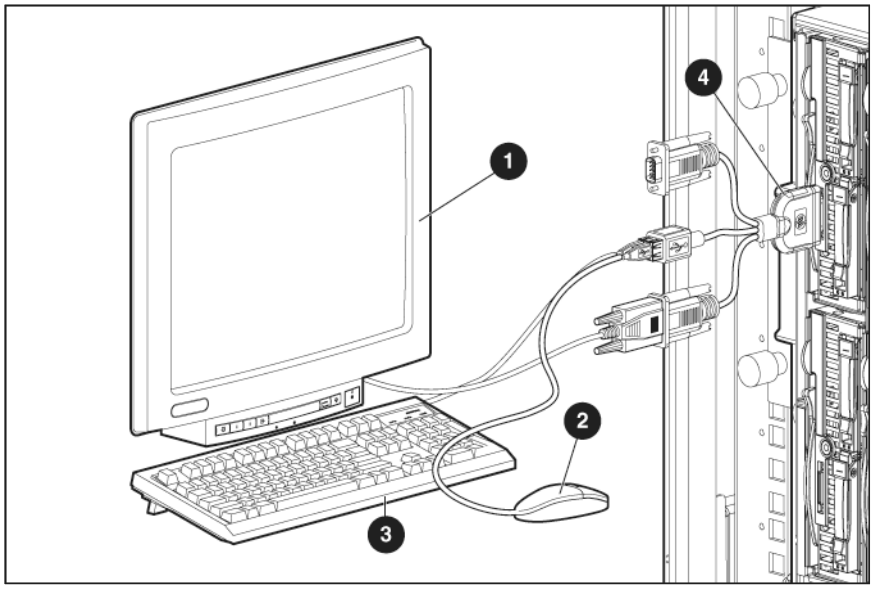

Item	Description
1	Monitor
2	USB mouse
3	USB keyboard
4	HP c-Class Blade SUV Cable

Accessing local media devices

Use the following configuration with a workstation blade or loading software updates and patches from a USB CD/DVD-ROM or a USB diskette.

Use a USB hub when connecting a USB diskette drive and/or USB CD-ROM drive to the workstation blade. The USB hub provides additional connections. To access the devices:

1. Connect the HP c-Class Blade SUV cable to the workstation blade.
2. Connect the video connector to a monitor.
3. Connect a USB hub to one USB connector.
4. Connect the following to the USB hub:
   - USB CD/DVD-ROM drive
   - USB keyboard
   - USB mouse

- USB diskette drive

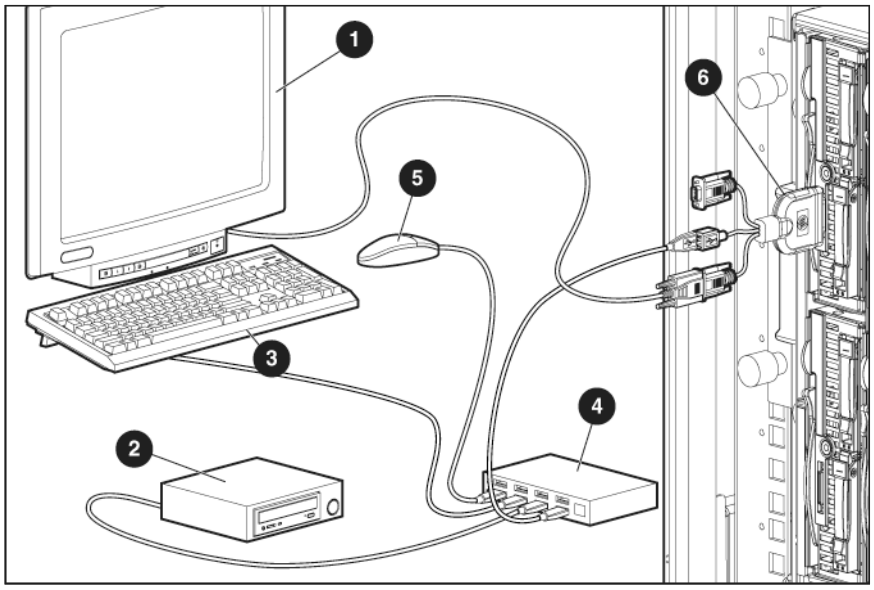

Item	Description
1	Monitor
2	USB CD/DVD-ROM drive or diskette drive
3	USB keyboard
4	USB hub
5	USB mouse
6	HP c-Class Blade SUV Cable

Software and configuration utilities

Server blade deployment tools

Software drivers and additional components

HP offers the following additional software components for workstation blades:

- Health and Wellness driver and IML viewer
- iLO 2 Management interface driver
- Rack infrastructure interface service

For Microsoft® Windows® OS users, these items are included in the HP ProLiant iLO 2 Standard Blade Edition, available from the HP website (http://www.hp.com/servers/lights-out).

Linux OS users can download these components from the HP website (http://www.hp.com/products/servers/linux).

For information on how to use these components with a Linux OS, see the HP website (http://h18000.www1.hp.com/products/servers/linux/documentation.html).

HP BladeSystem c-Class Advanced management

iLO 2 is a standard component of ProLiant c-Class workstation blades that provides server health and remote workstation blade manageability. Its features are accessed from a network client device using a supported web browser. In addition to other features, iLO 2 provides keyboard, mouse, and video (text and graphics) capability for a workstation blade, regardless of the state of the host OS or host workstation blade.

iLO 2 includes an intelligent microprocessor, secure memory, and a dedicated network interface. This design makes iLO 2 independent of the host workstation blade and its OS. iLO 2 provides remote access to any authorized network client, sends alerts, and provides other workstation blade management functions.

Using a supported web browser, you can:

- Remotely access the console of the host workstation blade, including all text mode and graphics mode screens with full keyboard and mouse controls.
- Remotely power up, power down, or reboot the host workstation blade.
- Remotely boot a host workstation blade to a virtual media image to perform a ROM upgrade or install an OS.
- Send alerts from iLO 2 regardless of the state of the host workstation blade.
- Access advanced troubleshooting features provided by iLO 2.
- Launch a web browser, use SNMP alerting, and diagnose the workstation blade with HP SIM.
- Configure static IP bay settings for the dedicated iLO 2 management NICs on each workstation blade in an enclosure for faster deployment.

To connect to the workstation blade using iLO 2, install the workstation blade in an enclosure. Onboard Administrator assigns an IP address to enable iLO 2 connectivity to the workstation blade.

The c-Class tab enables you to control specific settings for the HP BladeSystem. iLO 2 also provides web-based status for the HP BladeSystem configuration.

For detailed information about iLO 2, refer to the *HP Integrated Lights-Out User Guide* on the HP website (http://www.hp.com/servers/lights-out).

Network-based PXE deployment

PXE is a component of the Intel® WfM specification. The PXE model enables workstation blades to load and execute an NBP from a PXE server and to execute a pre-configured image. The image can be an OS image created by software utilities or a boot diskette image. This feature enables a user to configure a workstation blade and install an OS over a network.

Deployment overview

When a PXE-enabled target workstation blade boots, it obtains an IP address from a DHCP server. The target workstation blade obtains the name of the NBP from the appropriate boot server. Then, the target workstation blade uses TFTP to download the NBP from the boot server and executes the image.

IMPORTANT: To connect to a network with a Pass-Thru module, always connect the Pass-Thru module to a network device that supports Gigabit speed.

For each workstation blade being deployed, the PXE server must be connected to the NIC designated for PXE. The workstation blade defaults PXE functions to NIC 1, but any of the NC series NICs in the workstation blade can be designated for PXE in RBSU. For NIC connector locations, refer to the documentation included with the workstation blade.

NOTE: Actual NIC numeration depends on several factors, including the OS installed on the workstation blade.

To deploy an OS to multiple workstation blades, install a PXE deployment server on a network.

Deployment methods

IMPORTANT: To deploy a workstation blade without HP Insight Control server deployment, create a bootable diskette or image of a bootable diskette.

- PXE deployment
- CD-ROM deployment (on page 54)
- Diskette image deployment (on page 54)
- SAN configuration (on page 55)

PXE deployment

PXE enables workstation blades to load an image over the network from a PXE server, and then execute it in memory. The first NIC on the workstation blade is the default PXE boot NIC, but any of the other NC series NICs can be configured to boot PXE. For more information, see "Network-based PXE deployment (on page 51)."

NOTE: Actual NIC numeration depends on several factors, including the OS installed on the workstation blade.

HP recommends using one of the following methods for PXE deployment:

- HP Insight Control server deployment
- SmartStart Scripting Toolkit (on page 52)

HP Insight Control server deployment

NOTE: To deploy workstation blades in an existing server blade enclosure, always use the most recent version of HP Insight Control server deployment available at the HP website (http://www.hp.com).

HP recommends HP Insight Control server deployment for rapid, high-volume server deployments. Insight Control server deployment integrates two powerful products: Altiris Deployment Solution and the HP ProLiant Integration Module.

The intuitive GUI of the Altiris Deployment Solution console provides simplified point-and-click and drag-and-drop operations that enable you to deploy target servers, including server blades remotely. The GUI enables you to perform imaging or scripting functions and maintain software images.

For more information, see the HP Insight Control server deployment CD or the HP website (http://www.hp.com).

SmartStart Scripting Toolkit

The SmartStart Scripting Toolkit is a server deployment product that allows you to build an unattended automated installation for high-volume server deployments. The SmartStart Scripting Toolkit is designed to support ProLiant BL, ML, DL, and SL servers. The toolkit includes a modular set of utilities and important documentation that describes how to apply these tools to build an automated server deployment process.

The Scripting Toolkit provides a flexible way to create standard server configuration scripts. These scripts are used to automate many of the manual steps in the server configuration process. This automated server configuration process cuts time from each deployment, making it possible to scale rapid, high-volume server deployments.

For more information, and to download the SmartStart Scripting Toolkit, see the HP website (http://www.hp.com/servers/sstoolkit).

Deployment infrastructure

IMPORTANT: To connect to a network with a Pass-Thru module, always connect the Pass-Thru module to a network device that supports Gigabit speed.

To establish a network-based PXE deployment infrastructure, provide the following software and minimum hardware:

- Client PC (administrative workstation)
  - AMD Athlon™ XP processor (700 MHz or greater recommended), AMD Athlon™ 64 processor, or Intel® Pentium® III or higher processor (700 MHz or greater recommended)
  - 128 MB of RAM
  - Microsoft® Windows® 2000 Professional or Microsoft® Windows® XP OS

- Microsoft® Internet Explorer 5.5 or above with 128-bit encryption
- Ethernet NIC with 10/100 RJ-45 connector
- TCP/IP networking and an IP address compatible with one of the following: the iLO 2 Diagnostic Port IP address or an assigned DHCP or static IP address
- CD-ROM drive, CD/DVD-ROM drive, and/or diskette drive
- Any of the following Java™ Runtime Environment versions:

  1.3.1_02

  1.3.1_07

  1.3.1_08

  1.4.1 for Windows® users only

  1.4.2 for Linux users only

  Access the Java™ Runtime Environment versions at the HP website (http://java.sun.com/products/archive/index.html).

- DHCP server (IP address assignment)
  - AMD Athlon™ XP processor (700 MHz or greater recommended), AMD Athlon™ 64 processor, or Intel® Pentium® or Pentium® II 200-MHz or faster processor
  - 64 MB of RAM
  - 64 MB of free hard drive space
  - 10-Mb/s network adapter
- PXE deployment server (storing boot images)
  - AMD Athlon™ XP processor (700 MHz or greater recommended), AMD Athlon™ 64 processor, or Intel® Pentium® III or higher processor (500 MHz recommended)
  - 256 MB of RAM
  - 10-Mb/s network adapter
  - CD-ROM drive
- Windows® repository server (Windows® or Linux deployment)
  - Windows® 2000 or Windows Server® 2003 OS installed
  - Network connection
  - CD-ROM drive
  - 1.5 GB of available disk space
  - TCP/IP networking and an IP address compatible with one of the following: the iLO 2 Diagnostic Port IP address or an assigned DHCP or static IP address
  - CD-ROM drive and/or diskette drive
  - Any of the following Java™ Runtime Environment versions:

    1.3.1_02

    1.3.1_07

    1.3.1_08

    1.4.1 for Windows® users only

    1.4.2 for Linux users only

Access the Java™ Runtime Environment versions at the HP website (http://java.sun.com/products/archive/index.html).

- Network server with an OS installed

CD-ROM deployment

CD-ROM deployment involves using a bootable CD that executes scripts to configure the hardware and install the OS. After the OS is configured, the workstation blade can access the network to locate the scripts and files necessary for deployment. Before beginning the deployment process, connect the workstation blade to the network.

NOTE: For more information about hardware and cabling configurations, see the documents that ship with the enclosure.

Two methods are available for CD-ROM deployment:

- iLO virtual CD-ROM (on page 54)
- USB CD-ROM

iLO virtual CD-ROM

To deploy with a boot CD:

1. Do one of the following:
   - Insert the boot CD into the client PC using the iLO 2 Remote Console.
   - Use iLO 2 to create an image file of the boot CD.
   - Copy the image of the boot CD to a location on the network or the client PC hard drive.
2. Remotely access the workstation blade through iLO 2. See "HP BladeSystem c-Class advanced management (on page 50)."
3. Click the **Virtual Media** tab.
4. Select the **Virtual Media** applet.
5. Use the Virtual Media applet to select the local CD or image file and connect the Virtual CD to the workstation blade.
6. Use the iLO 2 Virtual Power Button feature to reboot the workstation blade.
7. After the workstation blade boots, follow the normal network installation procedure for the OS.

Diskette image deployment

To deploy with a diskette image, you must create a DOS-based network-enabled boot diskette. That script executes a script that configures the hardware and installs the OS. The diskette enables the workstation blade to access the required deployment scripts and files on the network.

This deployment method implies a deployment infrastructure that can include an administrator workstation, PXE server, Microsoft® Windows® file share, or a Linux file share. For more information, see "Deployment infrastructure (on page 52)."

Before beginning the deployment process, connect the workstation blade to the network.

NOTE: For more information about hardware and cabling configurations, see the documents that ship with the enclosure.

Two methods are available for diskette image deployment:

- iLO virtual floppy (on page 55)
- PXE

Some USB floppy disk drives do not work when you press F6 to install mass storage drivers during the Windows XP installation process. For more information, see http://support.microsoft.com/kb/916196/en-us (http://support.microsoft.com/kb/916196/en-us).

Creating a boot diskette

The SmartStart Scripting Toolkit provides the tools and information for creating a boot diskette. For details, refer to the *SmartStart Scripting Toolkit User Guide* and download the latest version of the software from the HP website (http://www.hp.com/servers/sstoolkit).

As an alternative method, configure the hardware manually with RBSU and the iLO 2 remote console. With this method, the disk is more generic and integrates with an existing network OS installation process. For more information, refer to "HP BladeSystem c-Class advanced management (on page 50)."

To operate properly, the workstation blade must have a supported OS. For the latest information on a supported OS, refer to the HP website (http://www.hp.com/go/supportos).

iLO virtual floppy

To deploy with a boot diskette:

1. Do one of the following:
   - Insert the boot diskette into the client PC using the iLO 2 Remote Console.
   - Use iLO 2 to create an image file of the boot diskette.
   - Copy the image of the boot diskette to a location on the network or the client PC hard drive.
2. Remotely access the workstation blade through iLO 2. See "HP BladeSystem c-Class advanced management (on page 50)."
3. Click the **Virtual Media** tab.
4. Select the **Virtual Media** applet.
5. Use the Virtual Media applet to select the local diskette or image file and connect the Virtual CD to the workstation blade.
6. Use the iLO 2 Virtual Power Button feature to reboot the workstation blade.
7. After the workstation blade boots, follow the normal network installation procedure for the OS.

SAN configuration

The workstation blade provides Fibre Channel support for SAN implementations. This solution uses an optional FCA that offers redundant SAN connectivity and optimization for HP StorageWorks products. The workstation blade is also compatible with certain third-party SAN products. For more information, see the documentation that ships with the FCA option.

For optimal SAN connectivity, observe the following guidelines:

- The FCA option is installed correctly in the workstation blade. See the documentation that ships with the FCA option.
- An Fibre Channel-compatible interconnect is installed in the enclosure. See the documentation that ships with the interconnect option.

- The server blade enclosure management module firmware is up-to-date. See the HP Business Support Center website (http://www.hp.com/support).
- The workstation blade is cabled properly to a supported SAN.
- SAN storage drivers are loaded. See supporting white papers and the HP website (http://www.hp.com).

For SAN configuration information for the workstation blade, see the *HP StorageWorks SAN Design Reference Guide* on the HP website (http://h18000.www1.hp.com/products/storageworks/san/documentation.html).

Configuration tools

HP ROM-Based Setup Utility

RBSU is a configuration utility embedded in ProLiant servers that performs a wide range of configuration activities that can include the following:

- Configuring system devices and installed options
- Enabling and disabling system features
- Displaying system information
- Selecting the primary boot controller
- Configuring memory options
- Language selection

For more information on RBSU, see the *HP ROM-Based Setup Utility User Guide* on the Documentation CD or the HP website (http://www.hp.com/support/smartstart/documentation).

Using RBSU

To use RBSU, use the following keys:

- To access RBSU, press the **F9** key during power-up when prompted.
- To navigate the menu system, use the arrow keys.
- To make selections, press the **Enter** key.
- To access Help for a highlighted configuration option, press the **F1** key.

IMPORTANT: RBSU automatically saves settings when you press the **Enter** key. The utility does not prompt you for confirmation of settings before you exit the utility. To change a selected setting, you must select a different setting and press the **Enter** key.

Default configuration settings are applied to the server at one of the following times:

- Upon the first system power-up
- After defaults have been restored

Default configuration settings are sufficient for proper typical server operation, but configuration settings can be modified using RBSU. The system will prompt you for access to RBSU with each power-up.

Auto-configuration process

The auto-configuration process automatically runs when you boot the server for the first time. During the power-up sequence, the system ROM automatically configures the entire system without needing any intervention. During this process, the ORCA utility, in most cases, automatically configures the array to a default setting based on the number of drives connected to the server.

NOTE: The server may not support all the following examples.

NOTE: If the boot drive is not empty or has been written to in the past, ORCA does not automatically configure the array. You must run ORCA to configure the array settings.

Drives installed	Drives used	RAID level
1	1	RAID 0
2	2	RAID 1
3, 4, 5, or 6	3, 4, 5, or 6	RAID 5
More than 6	0	None

To change any ORCA default settings and override the auto-configuration process, press the **F8** key when prompted.

By default, the auto-configuration process configures the system for the English language. To change any default settings in the auto-configuration process (such as the settings for language, operating system, and primary boot controller), execute RBSU by pressing the **F9** key when prompted. After the settings are selected, exit RBSU and allow the server to reboot automatically.

For more information on RBSU, see the *HP ROM-Based Setup Utility User Guide* on the Documentation CD or the HP website (http://www.hp.com/support/smartstart/documentation).

Boot options

Near the end of the boot process, the boot options screen is displayed. This screen is visible for several seconds before the system attempts to boot from a supported boot device. During this time, you can do the following:

- Access RBSU by pressing the **F9** key.
- Access the System Maintenance Menu (which enables you to launch ROM-based Diagnostics or Inspect) by pressing the **F10** key.
- Force a PXE Network boot by pressing the **F12** key.

BIOS Serial Console

BIOS Serial Console allows you to configure the serial port to view POST error messages and run RBSU remotely through a serial connection to the server COM port. The server that you are remotely configuring does not require a keyboard and mouse.

For more information about BIOS Serial Console, see the *BIOS Serial Console User Guide* on the Documentation CD or the HP website (http://www.hp.com/support/smartstart/documentation).

Configuring mirrored memory

To configure mirrored memory:

1. Install the required DIMMs.
2. Access RBSU by pressing the **F9** key during power-up when the prompt is displayed.
3. Select **System Options**.
4. Select **Advanced Memory Protection**.
5. Select **Mirrored Memory with Advanced ECC Support**.
6. Press the **Enter** key.
7. Press the **Esc** key to exit the current menu or press the **F10** key to exit RBSU.

For more information on mirrored memory, see the white paper on the HP website (http://h18000.www1.hp.com/products/servers/technology/memoryprotection.html).

Configuring lockstep memory

To configure Lockstep memory:

1. Install the required DIMMs.
2. Access RBSU by pressing the **F9** key during power-up when the prompt is displayed.
3. Select **System Options**.
4. Select **Advanced Memory Protection**.
5. Select **Lockstep with Advanced ECC Support**.
6. Press the **Enter** key.
7. Press the **Esc** key to exit the current menu, or press the **F10** key to exit RBSU.

For more information on Lockstep memory, see the white paper on the HP website (http://h18000.www1.hp.com/products/servers/technology/memoryprotection.html).

Array Configuration Utility

ACU is a browser-based utility with the following features:

- Runs as a local application or remote service
- Supports online array capacity expansion, logical drive extension, assignment of online spares, and RAID or stripe size migration
- Suggests the optimum configuration for an unconfigured system
- Provides different operating modes, enabling faster configuration or greater control over the configuration options
- Remains available any time that the server is on
- Displays on-screen tips for individual steps of a configuration procedure
- Beginning with ACU version 8.28.13.0, provides diagnostic functionality on the Diagnostics tab (formerly known as Array Diagnostics Utility).

For optimum performance, the minimum display settings are 1024 × 768 resolution and 16-bit color. Servers running Microsoft® operating systems require one of the following supported browsers:

- Internet Explorer 6.0 or later

- Mozilla Firefox 2.0 or later

For Linux servers, see the README.TXT file for additional browser and support information.

For more information about the controller and its features, see the *HP Smart Array Controllers for HP ProLiant Servers User Guide* on the HP website (http://www.hp.com/support/SAC_UG_ProLiantServers_en). To configure arrays, see the *Configuring Arrays on HP Smart Array Controllers Reference Guide* on the HP website (http://www.hp.com/support/CASAC_RG_en).

Option ROM Configuration for Arrays

Before installing an operating system, you can use the ORCA utility to create the first logical drive, assign RAID levels, and establish online spare configurations.

The utility also provides support for the following functions:

- Reconfiguring one or more logical drives
- Viewing the current logical drive configuration
- Deleting a logical drive configuration
- Setting the controller to be the boot controller
- Selecting the boot volume

If you do not use the utility, ORCA will default to the standard configuration.

For more information regarding the default configurations that ORCA uses, see the *HP ROM-Based Setup Utility User Guide* on the Documentation CD.

For more information about the controller and its features, see the *HP Smart Array Controllers for HP ProLiant Servers User Guide* on the HP website (http://www.hp.com/support/SAC_UG_ProLiantServers_en). To configure arrays, see the *Configuring Arrays on HP Smart Array Controllers Reference Guide* on the HP website (http://www.hp.com/support/CASAC_RG_en).

Re-entering the server serial number and product ID

After you replace the system board, you must re-enter the server serial number and the product ID.

1. During the server startup sequence, press the **F9** key to access RBSU.
2. Select the **System Options** menu.
3. Select **Serial Number**. The following warning is displayed:

   ```
   WARNING! WARNING! WARNING! The serial number is loaded into the system during
   the manufacturing process and should NOT be modified. This option should only
   be used by qualified service personnel. This value should always match the
   serial number sticker located on the chassis.
   ```
4. Press the **Enter** key to clear the warning.
5. Enter the serial number and press the **Enter** key.
6. Select **Product ID**.
7. Enter the product ID and press the **Enter** key.
8. Press the **Esc** key to close the menu.
9. Press the **Esc** key to exit RBSU.
10. Press the **F10** key to confirm exiting RBSU. The server will automatically reboot.

Management tools

Automatic Server Recovery

ASR is a feature that causes the system to restart when a catastrophic operating system error occurs, such as a blue screen, ABEND (does not apply to HP ProLiant DL980 Servers), or panic. A system fail-safe timer, the ASR timer, starts when the System Management driver, also known as the Health Driver, is loaded. When the operating system is functioning properly, the system periodically resets the timer. However, when the operating system fails, the timer expires and restarts the server.

ASR increases server availability by restarting the server within a specified time after a system hang. At the same time, the HP SIM console notifies you by sending a message to a designated pager number that ASR has restarted the system. You can disable ASR from the System Management Homepage or through RBSU.

ROMPaq utility

The ROMPaq utility enables you to upgrade the system firmware (BIOS). To upgrade the firmware, insert a ROMPaq USB Key into an available USB port and boot the system. In addition to ROMPaq, Online Flash Components for Windows and Linux operating systems are available for updating the system firmware.

The ROMPaq utility checks the system and provides a choice (if more than one exists) of available firmware revisions.

For more information, see the Download drivers and software page for the workstation blade. To access the server-specific page, enter the following web address into the browser:

http://www.hp.com/support/*<servername>*

For example:

http://www.hp.com/support/dl360g6

Integrated Lights-Out 2 technology

The iLO 2 subsystem is a standard component of selected ProLiant servers that provides server health and remote server manageability. The iLO 2 subsystem includes an intelligent microprocessor, secure memory, and a dedicated network interface. This design makes iLO 2 independent of the host server and its operating system. The iLO 2 subsystem provides remote access to any authorized network client, sends alerts, and provides other server management functions.

Using iLO 2, you can:

- Remotely power up, power down, or reboot the host server.
- Send alerts from iLO 2 regardless of the state of the host server.
- Access advanced troubleshooting features through the iLO 2 interface.
- Diagnose iLO 2 using HP SIM through a web browser and SNMP alerting.

For more information about iLO 2 features (which may require an iLO Advanced Pack or iLO Advanced for BladeSystem license), see the iLO 2 documentation on the Documentation CD or on the HP website (http://www.hp.com/servers/lights-out).

Erase Utility

CAUTION: Perform a backup before running the System Erase Utility. The utility sets the system to its original factory state, deletes the current hardware configuration information, including array setup and disk partitioning, and erases all connected hard drives completely. Refer to the instructions for using this utility.

Run the Erase Utility if you must erase the system for the following reasons:

- You want to install a new operating system on a workstation blade with an existing operating system.
- You encounter an error when completing the steps of a factory-installed operating system installation.

To access the Erase Utility, use the System Erase button on the home screen of the SmartStart CD.

StorageWorks library and tape tools

HP StorageWorks L&TT provides functionality for firmware downloads, verification of device operation, maintenance procedures, failure analysis, corrective service actions, and some utility functions. It also provides seamless integration with HP hardware support by generating and emailing support tickets that deliver a snapshot of the storage system.

For more information, and to download the utility, refer to the StorageWorks L&TT website (http://h18006.www1.hp.com/products/storageworks/ltt).

HP Systems Insight Manager

HP SIM is a web-based application that allows system administrators to accomplish normal administrative tasks from any remote location, using a web browser. HP SIM provides device management capabilities that consolidate and integrate management data from HP and third-party devices.

IMPORTANT: You must install and use HP SIM to benefit from the Pre-Failure Warranty for processors, SAS and SATA hard drives, and memory modules.

For additional information, refer to the Management CD in the HP ProLiant Essentials Foundation Pack or the HP SIM website (http://www.hp.com/go/hpsim).

Management Agents

Management Agents provide the information to enable fault, performance, and configuration management. The agents allow easy manageability of the server through HP SIM software, and third-party SNMP management platforms. Management Agents are installed with every SmartStart assisted installation or can be installed through the HP PSP. The Systems Management homepage provides status and direct access to in-depth subsystem information by accessing data reported through the Management Agents. For additional information, refer to the Management CD in the HP ProLiant Essentials Foundation Pack or the HP website (http://www.hp.com/servers/manage).

Redundant ROM support

The server enables you to upgrade or configure the ROM safely with redundant ROM support. The server has an 8-MB ROM that acts as two, separate 4-MB ROMs. In the standard implementation, one side of the ROM contains the current ROM program version, while the other side of the ROM contains a backup version.

NOTE: The server ships with the same version programmed on each side of the ROM.

Safety and security benefits

When you flash the system ROM, ROMPaq writes over the backup ROM and saves the current ROM as a backup, enabling you to switch easily to the alternate ROM version if the new ROM becomes corrupted for any reason. This feature protects the existing ROM version, even if you experience a power failure while flashing the ROM.

USB support and functionality

USB support

HP provides both standard USB support and legacy USB support. Standard support is provided by the OS through the appropriate USB device drivers. Before the OS loads, HP provides support for USB devices through legacy USB support, which is enabled by default in the system ROM.

Legacy USB support provides USB functionality in environments where USB support is not available normally. Specifically, HP provides legacy USB functionality for the following:

- POST
- RBSU
- Diagnostics
- DOS
- Operating environments which do not provide native USB support

Internal USB functionality

An internal USB connector is available for use with security key devices and USB drive keys. This solution provides for use of a permanent USB key installed in the internal connector, avoiding issues of clearance on the front of the rack and physical access to secure data.

For additional security, external USB functionality can be disabled through RBSU. Disabling external USB support in RBSU disables the USB connectors on the local I/O cable. Internal USB functionality is unaffected.

Ethernet and Fibre Channel module support

The WS460c G6 Workstation Blade supports Ethernet and Fibre Channel modules. For more information, see the HP ProLiant WS460c Generation 6 (G6) Workstation Blade quickspecs (http://h18004.www1.hp.com/products/quickspecs/13332_na/13332_na.pdf).

Diagnostic tools

HP Insight Diagnostics

HP Insight Diagnostics is a proactive workstation blade management tool, available in both offline and online versions, that provides diagnostics and troubleshooting capabilities to assist IT administrators who verify workstation blade installations, troubleshoot problems, and perform repair validation.

HP Insight Diagnostics Offline Edition performs various in-depth system and component testing while the OS is not running. To run this utility, launch the SmartStart CD.

HP Insight Diagnostics Online Edition is a web-based application that captures system configuration and other related data needed for effective workstation blade management. Available in Microsoft® Windows® and Linux versions, the utility helps to ensure proper system operation.

For more information or to download the utility, refer to the HP website (http://www.hp.com/servers/diags).

HP Insight Diagnostics survey functionality

HP Insight Diagnostics (on page 63) provides survey functionality that gathers critical hardware and software information on ProLiant workstation blades.

This functionality supports operating systems that may not be supported by the workstation blade. For operating systems supported by the workstation blade, see the HP website (http://www.hp.com/go/supportos).

If a significant change occurs between data-gathering intervals, the survey function marks the previous information and overwrites the survey data files to reflect the latest changes in the configuration.

Survey functionality is installed with every SmartStart-assisted HP Insight Diagnostics installation, or it can be installed through the HP PSP.

NOTE: The current version of SmartStart provides the memory spare part numbers for the workstation blade. To download the latest version, see the HP website (http://www.hp.com/support).

Integrated Management Log

The IML records hundreds of events and stores them in an easy-to-view form. The IML timestamps each event with 1-minute granularity.

You can view recorded events in the IML in several ways, including the following:

- From within HP SIM ("HP Systems Insight Manager" on page 61)
- From within Survey Utility
- From within operating system-specific IML viewers
  - For NetWare: IML Viewer (does not apply to HP ProLiant DL980 Servers)
  - For Windows®: IML Viewer
  - For Linux: IML Viewer Application
- From within the iLO 2 user interface

- From within HP Insight Diagnostics (on page 63)

For more information, see the Management CD or DVD in the HP Insight Foundation suite for ProLiant.

Array Diagnostic Utility

The HP Array Diagnostics Utility is a web-based application that creates a report of all HP storage controllers and disk drives. This report provides vital information to assist in identifying faults or conditions that may require attention. ADU can be accessed from the SmartStart CD or downloaded from the HP website (http://www.hp.com).

Remote support and analysis tools

HP Insight Remote Support software

HP strongly recommends that you install HP Insight Remote Support software to complete the installation or upgrade of your product and to enable enhanced delivery of your HP Warranty, HP Care Pack Service, or HP contractual support agreement. HP Insight Remote Support supplements your monitoring 24 x 7 to ensure maximum system availability by providing intelligent event diagnosis, and automatic, secure submission of hardware event notifications to HP, which will initiate a fast and accurate resolution, based on your product's service level. Notifications may be sent to your authorized HP Channel Partner for on-site service, if configured and available in your country. The software is available in two variants:

- HP Insight Remote Support Standard: This software supports server and storage devices and is optimized for environments with 1–50 servers. Ideal for customers who can benefit from proactive notification but do not need proactive service delivery and integration with a management platform.
- HP Insight Remote Support Advanced: This software provides comprehensive remote monitoring and proactive service support for nearly all HP servers, storage, network, and SAN environments, plus selected non-HP servers that have a support obligation with HP. It is integrated with HP Systems Insight Manager. A dedicated server is recommended to host both HP Systems Insight Manager and HP Insight Remote Support Advanced.

Details for both versions are available on the HP website (http://www.hp.com/go/insightremotesupport).

To download the software, go to Software Depot (http://www.software.hp.com).

Select **Insight Remote Support** from the menu on the right.

IMPORTANT: Workstation blades using Windows Vista® x32 and x64 with Westmere 2 processors display the incorrect processor speed and type in the Device Manager. To resolve this issue, from the Control Panel, access either System Information or Welcome Center to see the correct processor speed and type.

NOTE: HP ProLiant WS460c G6 Workstation Blade with WS460c Graphics Expansion Blade supports remoting protocols such as Microsoft® Remote Desktop Protocol 7.1 or later.

Keeping the system current

ProLiant Support Packs

PSPs represent operating system-specific bundles of ProLiant optimized drivers, utilities, and management agents. Refer to the PSP website (http://h18000.www1.hp.com/products/servers/management/psp.html).

NOTE: The SAS/SATA controller driver in the PSP for the WS460c G6 workstation blade is currently an unsigned driver. The driver packaging in the PSP prevents the unsigned warning message from appearing.

Operating system version support

Refer to the operating system support matrix (http://www.hp.com/go/supportos).

System Online ROM flash component utility

The Online ROM Flash Component Utility enables system administrators to efficiently upgrade system or controller ROM images across a wide range of servers and array controllers. This tool has the following features:

- Works offline and online
- Supports Microsoft® Windows NT®, Windows® 2000, Windows Server® 2003, Windows Server 2008, Novell Netware, and Linux operating systems

IMPORTANT: This utility supports operating systems that may not be supported by the server. For operating systems supported by the server, see the HP website (http://www.hp.com/support).

- Integrates with other software maintenance, deployment, and operating system tools
- Automatically checks for hardware, firmware, and operating system dependencies, and installs only the correct ROM upgrades required by each target server

To download the tool and for more information, see the HP website (http://www.hp.com/support).

Change control and proactive notification

HP offers Change Control and Proactive Notification to notify customers 30 to 60 days in advance of upcoming hardware and software changes on HP commercial products.

For more information, refer to the HP website (http://www.hp.com/go/pcn).

Care Pack

HP Care Pack Services offer upgraded service levels to extend and expand bundled services with easy-to-buy, easy-to-use support packages that help you make the most of your server investments. For more information, see the HP website (http://www.hp.com/services/carepack).

HP Smart Update Manager

The HP Smart Update Manager provides intelligent and flexible firmware and software deployment. This technology assists in reducing the complexity of provisioning and updating HP ProLiant Servers, options, and Blades within the data center. HP SUM is delivered on the Smart Update Firmware DVD, ProLiant Support Packs, and Easy Set-up CDs.

HP SUM enables system administrators to upgrade ROM images efficiently across a wide range of workstation blades and options. This tool has the following features:

- Enables GUI and a command-line, scriptable interface
- Enables scriptable, command-line deployment
- Requires no agent for remote installations
- Enables dependency checking, which ensures appropriate install order and dependency checking between components
- Deploys software and firmware on Windows and Linux operating systems
- Performs local or remote (one-to-many) online deployment
- Deploys firmware and software together
- Supports offline and online deployment
- Deploys necessary component updates only
- Downloads the latest components from Web
- Enables direct update of BMC firmware (iLO and LO100i)

For more information about HP SUM and to access the *HP Smart Update Manager User Guide*, see the HP website (http://www.hp.com/go/hpsum/documentation).

Troubleshooting

Troubleshooting resources

The *HP ProLiant Servers Troubleshooting Guide* provides procedures for resolving common problems and comprehensive courses of action for fault isolation and identification, error message interpretation, issue resolution, and software maintenance on ProLiant servers and server blades. This guide includes problem-specific flowcharts to help you navigate complex troubleshooting processes. To view the guide, select a language:

- English (http://www.hp.com/support/ProLiant_TSG_en)
- French (http://www.hp.com/support/ProLiant_TSG_fr)
- Italian (http://www.hp.com/support/ProLiant_TSG_it)
- Spanish (http://www.hp.com/support/ProLiant_TSG_sp)
- German (http://www.hp.com/support/ProLiant_TSG_gr)
- Dutch (http://www.hp.com/support/ProLiant_TSG_nl)
- Japanese (http://www.hp.com/support/ProLiant_TSG_jp)

The *HP BladeSystem c-Class Enclosure Troubleshooting Guide* provides procedures and solutions for troubleshooting HP BladeSystem c-Class enclosures. This guide explains how to use the Insight Display to troubleshoot enclosures, and it includes a flowchart to help you navigate the troubleshooting process. To view the guide, see the HP website (http://www.hp.com/support/BladeSystem_Enclosure_TSG_en).

Pre-diagnostic steps

WARNING: To avoid potential problems, ALWAYS read the warnings and cautionary information in the server documentation before removing, replacing, reseating, or modifying system components.

IMPORTANT: This guide provides information for multiple servers. Some information may not apply to the server you are troubleshooting. Refer to the server documentation for information on procedures, hardware options, software tools, and operating systems supported by the server.

1. Review the important safety information (on page 67).
2. Gather symptom information (on page 69).
3. Prepare the server for diagnosis (on page 69).
4. Use the Start diagnosis flowchart (on page 72) to begin the diagnostic process.

Important safety information

Familiarize yourself with the safety information in the following sections before troubleshooting the server.

Important safety information

Before servicing this product, read the *Important Safety Information* document provided with the server.

Symbols on equipment

The following symbols may be placed on equipment to indicate the presence of potentially hazardous conditions.



This symbol indicates the presence of hazardous energy circuits or electric shock hazards. Refer all servicing to qualified personnel.
WARNING: To reduce the risk of injury from electric shock hazards, do not open this enclosure. Refer all maintenance, upgrades, and servicing to qualified personnel.



This symbol indicates the presence of electric shock hazards. The area contains no user or field serviceable parts. Do not open for any reason.
WARNING: To reduce the risk of injury from electric shock hazards, do not open this enclosure.



This symbol on an RJ-45 receptacle indicates a network interface connection.
WARNING: To reduce the risk of electric shock, fire, or damage to the equipment, do not plug telephone or telecommunications connectors into this receptacle.

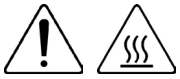

This symbol indicates the presence of a hot surface or hot component. If this surface is contacted, the potential for injury exists.
WARNING: To reduce the risk of injury from a hot component, allow the surface to cool before touching.

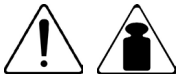

6.44 kg
14.20 lb

This symbol indicates that the component exceeds the recommended weight for one individual to handle safely.
WARNING: To reduce the risk of personal injury or damage to the equipment, observe local occupational health and safety requirements and guidelines for manual material handling.



These symbols, on power supplies or systems, indicate that the equipment is supplied by multiple sources of power.
WARNING: To reduce the risk of injury from electric shock, remove all power cords to completely disconnect power from the system.

Warnings

WARNING: Only authorized technicians trained by HP should attempt to repair this equipment. All troubleshooting and repair procedures are detailed to allow only subassembly/module-level repair. Because of the complexity of the individual boards and subassemblies, no one should attempt to make repairs at the component level or to make modifications to any printed wiring board. Improper repairs can create a safety hazard.

⚠ **WARNING:** To reduce the risk of personal injury or damage to the equipment, be sure that:

- The leveling feet are extended to the floor.
- The full weight of the rack rests on the leveling feet.
- The stabilizing feet are attached to the rack if it is a single-rack installation.
- The racks are coupled together in multiple-rack installations.
- Only one component is extended at a time. A rack may become unstable if more than one component is extended for any reason.

Symptom information

Before troubleshooting a server problem, collect the following information:

- What events preceded the failure? After which steps does the problem occur?
- What has been changed since the time the server was working?
- Did you recently add or remove hardware or software? If so, did you remember to change the appropriate settings in the server setup utility, if necessary?
- How long has the server exhibited problem symptoms?
- If the problem occurs randomly, what is the duration or frequency?

To answer these questions, the following information may be useful:

- Run HP Insight Diagnostics (on page 63) and use the survey page to view the current configuration or to compare it to previous configurations.
- Refer to your hardware and software records for information.
- Refer to server LEDs and their statuses.

Prepare the server for diagnosis

1. Be sure the server is in the proper operating environment with adequate power, air conditioning, and humidity control. For required environmental conditions, see the server documentation.
2. Record any error messages displayed by the system.
3. Remove all diskettes, CD-ROMs, DVD-ROMs, and USB drive keys.
4. Power down the server and peripheral devices if you will be diagnosing the server offline. If possible, always perform an orderly shutdown:
   a. Exit any applications.
   b. Exit the operating system.
   c. Power down the server ("Power down the workstation blade" on page 14).
5. Disconnect any peripheral devices not required for testing (any devices not necessary to power up the server). Do not disconnect the printer if you want to use it to print error messages.
6. Collect all tools and utilities, such as a Torx screwdriver, loopback adapters, ESD wrist strap, and software utilities, necessary to troubleshoot the problem.
   - You must have the appropriate Health Drivers and Management Agents installed on the server.

     To verify the server configuration, connect to the System Management Homepage (http://h18013.www1.hp.com/products/servers/management/agents/index.html) and select

Version Control Agent. The VCA gives you a list of names and versions of all installed HP drivers, Management Agents, and utilities, and whether they are up-to-date.

- HP recommends you have access to the server documentation for server-specific information.
- HP recommends you have access to the SmartStart CD for value-added software and drivers required during the troubleshooting process. Download the current version of SmartStart from the HP website (http://www.hp.com/servers/smartstart).

Performing processor procedures in the troubleshooting process

Before performing any troubleshooting steps that involve processors, review the following guidelines:

- Be sure that only authorized personnel perform the troubleshooting steps that involve installing, removing, or replacing a processor.
- Always locate the documentation for your processor model before performing **any** steps that require installing, removing, or replacing a processor. If you cannot locate the hard copy of the instructions that shipped with the processor, see the processor instructions in this document.
- Some processor models require the use of a processor installation tool, and specific steps are documented to ensure that you do not damage the processor or processor socket on the system board. For server models that have pins inside the processor socket, remember that **THE PINS ON THE SYSTEM BOARD ARE VERY FRAGILE AND EASILY DAMAGED**. If you damage the socket, you must replace the system board.
- Depending on the workstation blade model, the contacts may be on the processor or they may be inside the processor socket. Never touch the contacts. **THE PINS ON THE SYSTEM BOARD ARE VERY FRAGILE AND EASILY DAMAGED**. If the contacts inside the processor socket are damaged, the system board must be replaced.
- Always complete all other troubleshooting procedures before removing or replacing a processor.

Breaking the server down to the minimum hardware configuration

During the troubleshooting process, you may be asked to break the server down to the minimum hardware configuration. A minimum configuration consists of only the components needed to boot the server and successfully pass POST.

When requested to break the server down to the minimum configuration, uninstall the following components, if installed:

- All additional DIMMs

  Leave only the minimum required to boot the server—either one DIMM or a pair of DIMMs. For more information, see the memory guidelines in the server user guide.
- All additional cooling fans, if applicable

  For the minimum fan configuration, see the server user guide.
- All additional power supplies, if applicable (leave one installed)
- All hard drives
- All optical drives (DVD-ROM, CD-ROM, and so forth)
- All optional mezzanine cards
- All expansion boards

Before removing the components, be sure to determine the minimum configuration for each component and follow all guidelines in the server user guide.

Always use the recommended minimum configuration above before removing any processors. If you are unable to isolate the issue with the configuration above, you will then remove all but one of the processors.

> **CAUTION:** Before removing or replacing any processors, be sure to follow the guidelines provided in "Performing processor procedures in the troubleshooting process (on page 70)." Failure to follow the recommended guidelines can cause damage to the system board, requiring replacement of the system board.

Service notifications

To view the latest service notifications, refer to the HP website (http://www.hp.com/go/bizsupport). Select the appropriate server model, and then click the **Troubleshoot a Problem** link on the product page.

Loose connections

Action:

- Be sure all power cords are securely connected.
- Be sure all cables are properly aligned and securely connected for all external and internal components.
- Remove and check all data and power cables for damage. Be sure no cables have bent pins or damaged connectors.
- If a fixed cable tray is available for the server, be sure the cords and cables connected to the server are routed correctly through the tray.
- Be sure each device is properly seated. Avoid bending or flexing circuit boards when reseating components.
- If a device has latches, be sure they are completely closed and locked.
- Check any interlock or interconnect LEDs that might indicate a component is not connected properly.
- If issues continue to occur, remove and reinstall each device, checking the connectors and sockets for bent pins or other damage.

Server health LEDs

Some workstation blades have an internal health LED and an external health LED, while other workstation blades have a single system health LED. The system health LED provides the same functionality as the two separate internal and external health LEDs. Depending on the model, the internal health LED and external health LED may either appear solid or they may flash. Both conditions represent the same symptom.

For the location of workstation blade LEDs and information on their statuses, see the workstation blade documentation on the HP website (http://www.hp.com/support).

Troubleshooting flowcharts

To effectively troubleshoot a problem, HP recommends that you start with the first flowchart in this section, "Start diagnosis flowchart (on page 72)," and follow the appropriate diagnostic path. If the other flowcharts do not provide a troubleshooting solution, follow the diagnostic steps in "General diagnosis flowchart (on page 73)." The General diagnosis flowchart is a generic troubleshooting process to be used when the problem is not server-specific or is not easily categorized into the other flowcharts.

The available flowcharts include:

- Start diagnosis flowchart (on page 72)
- General diagnosis flowchart (on page 73)
- Server blade power-on problems flowchart (on page 75)
- POST problems flowchart (on page 77)
- OS boot problems flowchart (on page 79)
- Server fault indications flowchart (on page 81)

Start diagnosis flowchart

Use the following flowchart to start the diagnostic process.

Item	See
1	"General diagnosis flowchart (on page 73)"
2	"Power-on problems flowchart ("Server blade power-on problems flowchart" on page 75)"
3	"POST problems flowchart (on page 77)"
4	"OS boot problems flowchart (on page 79)"
5	"Server fault indications flowchart (on page 81)"

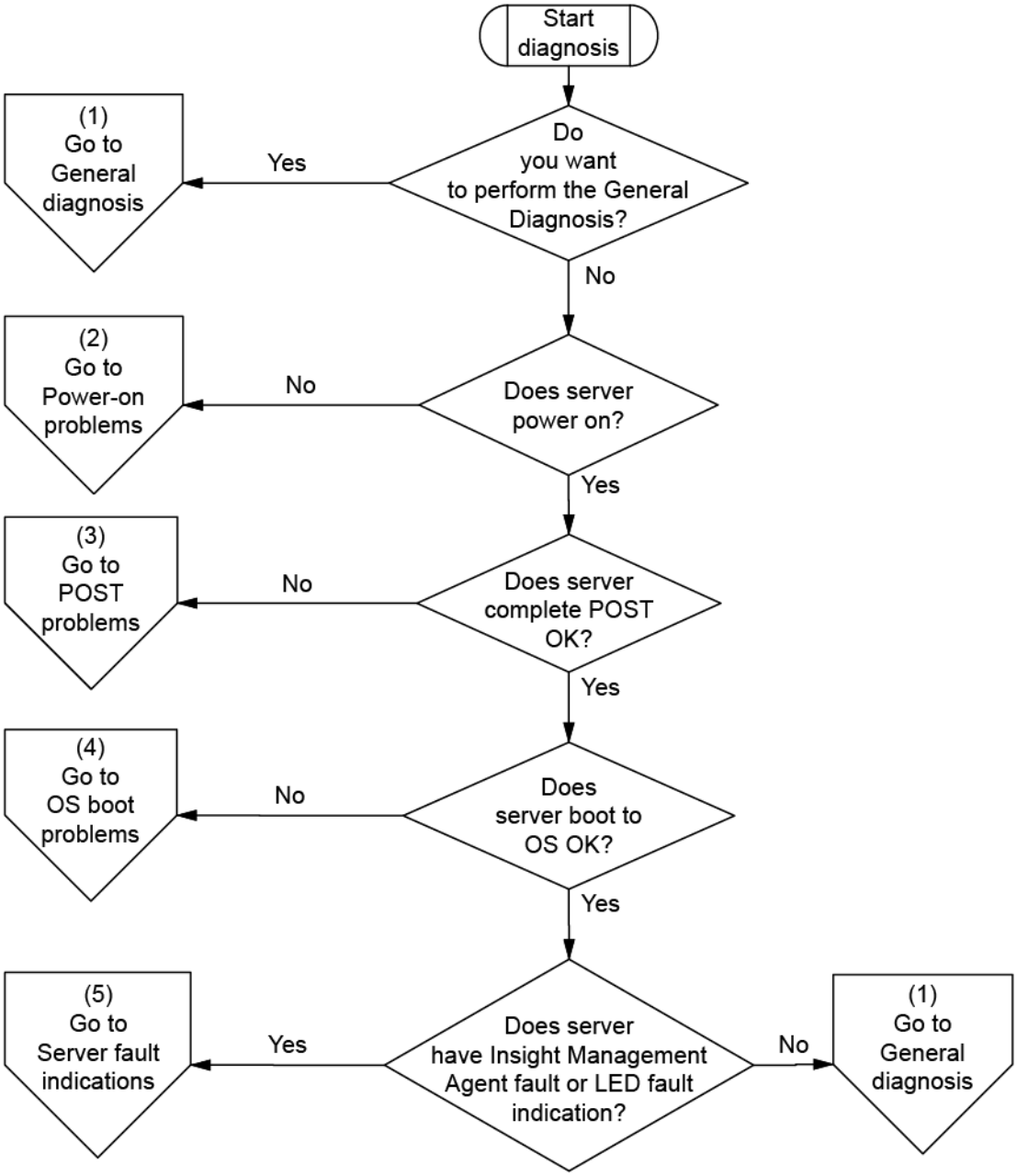

General diagnosis flowchart

The General diagnosis flowchart provides a generic approach to troubleshooting. If you are unsure of the problem, or if the other flowcharts do not fix the problem, use the following flowchart.

Item	See
1	"Symptom information (on page 69)"
2	"Loose connections (on page 71)"
3	"Service notifications (on page 71)"

Item	See
4	The most recent version of a particular server blade or option firmware is available on the HP Support website (http://www.hp.com/support).
5	"General memory problems are occurring" in the *HP ProLiant Servers Troubleshooting Guide* located on the Documentation CD or see "Troubleshooting resources (on page 67)"
6	• Maintenance and service guides for p-Class server blades, located on the Documentation CD or the HP website (http://www.hp.com/products/servers/proliant-bl/p-class/info) • Maintenance and service guides for c-Class server blades, located on the Documentation CD or the HP website (http://www.hp.com/go/bladesystem/documentation)
7	• Maintenance and service guides for p-Class server blades, located on the Documentation CD or the HP website (http://www.hp.com/products/servers/proliant-bl/p-class/info) • Maintenance and service guides for c-Class server blades, located on the Documentation CD or the HP website (http://www.hp.com/go/bladesystem/documentation) • "Hardware problems" in the *HP ProLiant Servers Troubleshooting Guide* located on the Documentation CD or see "Troubleshooting resources (on page 67)"
8	"Breaking the server down to the minimum hardware configuration (on page 70)" in the *HP ProLiant Servers Troubleshooting Guide* located on the Documentation CD or see "Troubleshooting resources (on page 67)"
9	• "Server information you need" in the *HP ProLiant Servers Troubleshooting Guide* located on the Documentation CD or see "Troubleshooting resources (on page 67)" • "Operating system information you need" in the *HP ProLiant Servers Troubleshooting Guide* located on the Documentation CD or see "Troubleshooting resources (on page 67)"
10	"HP contact information (on page 95)"

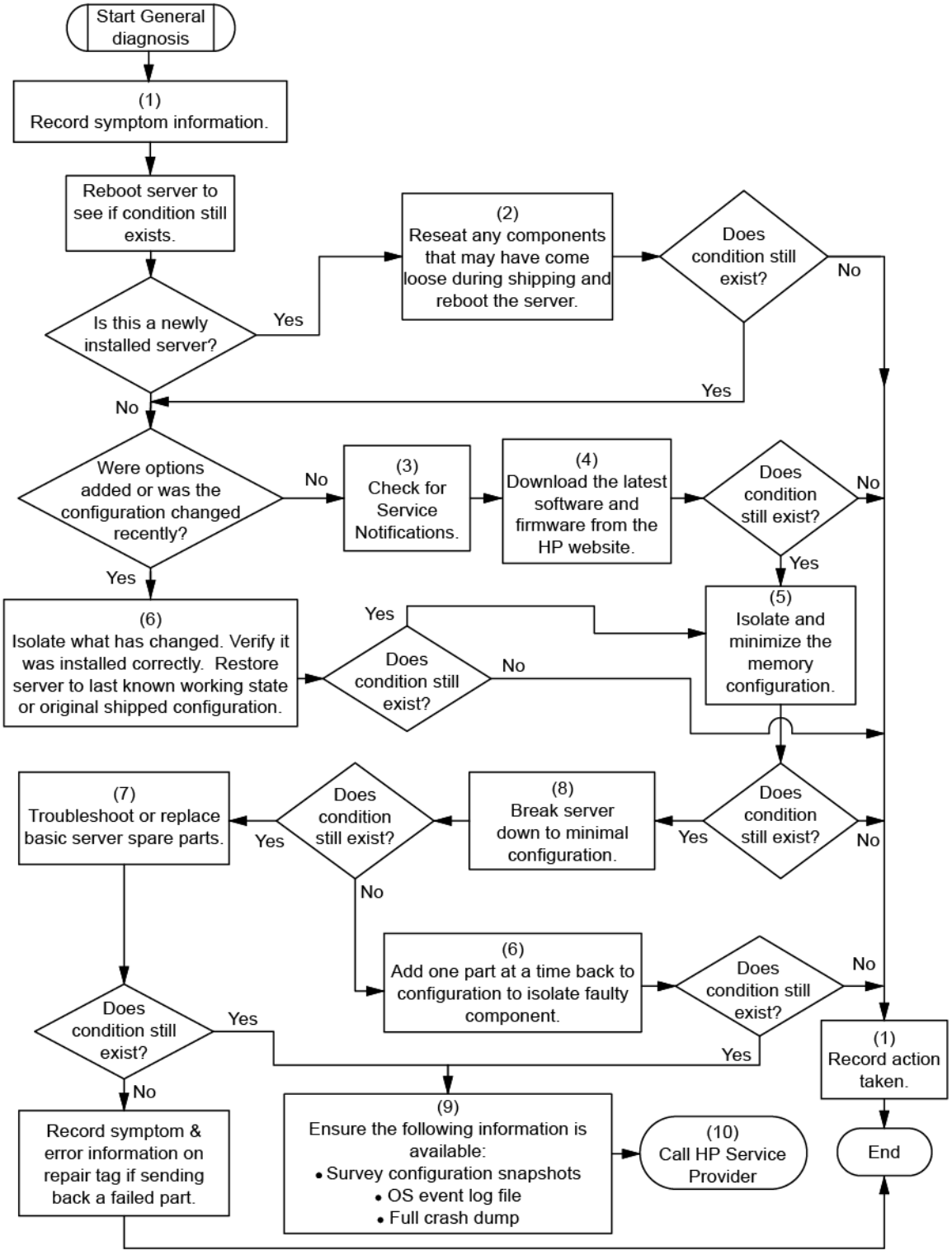

Server blade power-on problems flowchart

Symptoms:

- The server does not power on.
- The system power LED is off or amber.

- The health LED is red or amber.

  NOTE: For the location of server LEDs and information on their statuses, refer to the server documentation.

Possible causes:

- Improperly seated or faulty power supply
- Loose or faulty power cord
- Power source problem
- Power on circuit problem
- Improperly seated component or interlock problem
- Faulty internal component

Item	See
1	"Component identification (on page 6)"
2	Maintenance and service guides for c-Class server blades, located on the HP website (http://www.hp.com/go/bladesystem/documentation)
3	*Integrated Lights-Out User Guide* located on the HP website (http://www.hp.com/servers/lights-out)

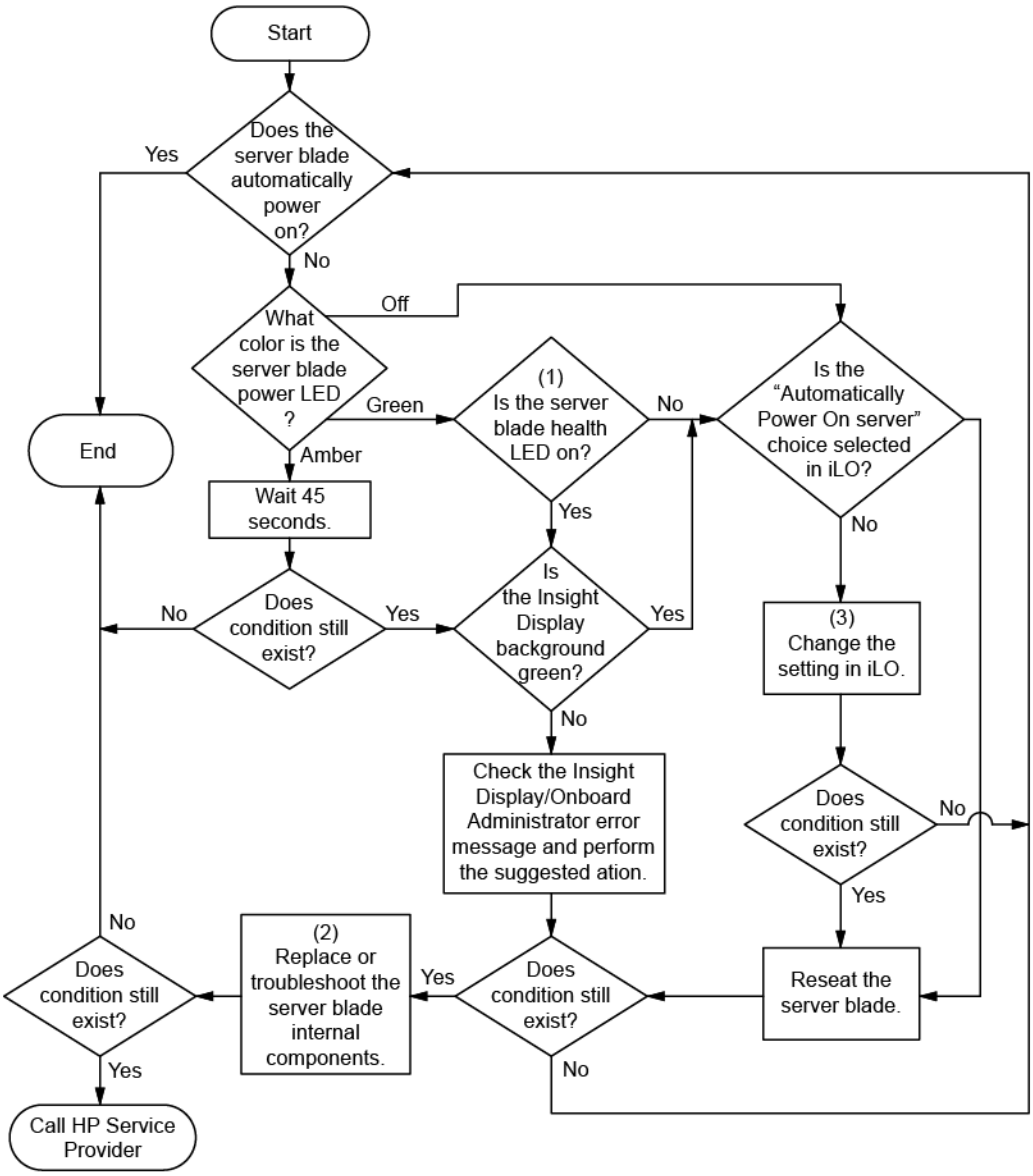

POST problems flowchart

Symptoms:

- Server does not complete POST

  NOTE: The server has completed POST when the system attempts to access the boot device.

- Server completes POST with errors

Possible problems:

- Improperly seated or faulty internal component
- Faulty KVM device
- Faulty video device

Item	See
1	Server blade power-on problems flowchart (on page 75)
2	"POST error messages and beep codes (on page 83)"
3	"Video problems" in the *HP ProLiant Servers Troubleshooting Guide* located on the Documentation CD or see "Troubleshooting resources (on page 67)"
4	"General memory problems are occurring" in the *HP ProLiant Servers Troubleshooting Guide* located on the Documentation CD or see "Troubleshooting resources (on page 67)"
5	"Breaking the server down to the minimum hardware configuration (on page 70)" or in the *HP ProLiant Servers Troubleshooting Guide* located on the Documentation CD or see "Troubleshooting resources (on page 67)"
6	"Symptom information (on page 69)"
7	• "Hardware problems" in the *HP ProLiant Servers Troubleshooting Guide* located on the Documentation CD or see "Troubleshooting resources (on page 67)" • Maintenance and service guides for c-Class server blades, located on the Documentation CD or the HP website (http://www.hp.com/go/bladesystem/documentation)
8	"HP contact information (on page 95)"
9	• "Server information you need" in the *HP ProLiant Servers Troubleshooting Guide* located on the Documentation CD or see "Troubleshooting resources (on page 67)" • "Operating system information you need" in the *HP ProLiant Servers Troubleshooting Guide* located on the Documentation CD or see "Troubleshooting resources (on page 67)"

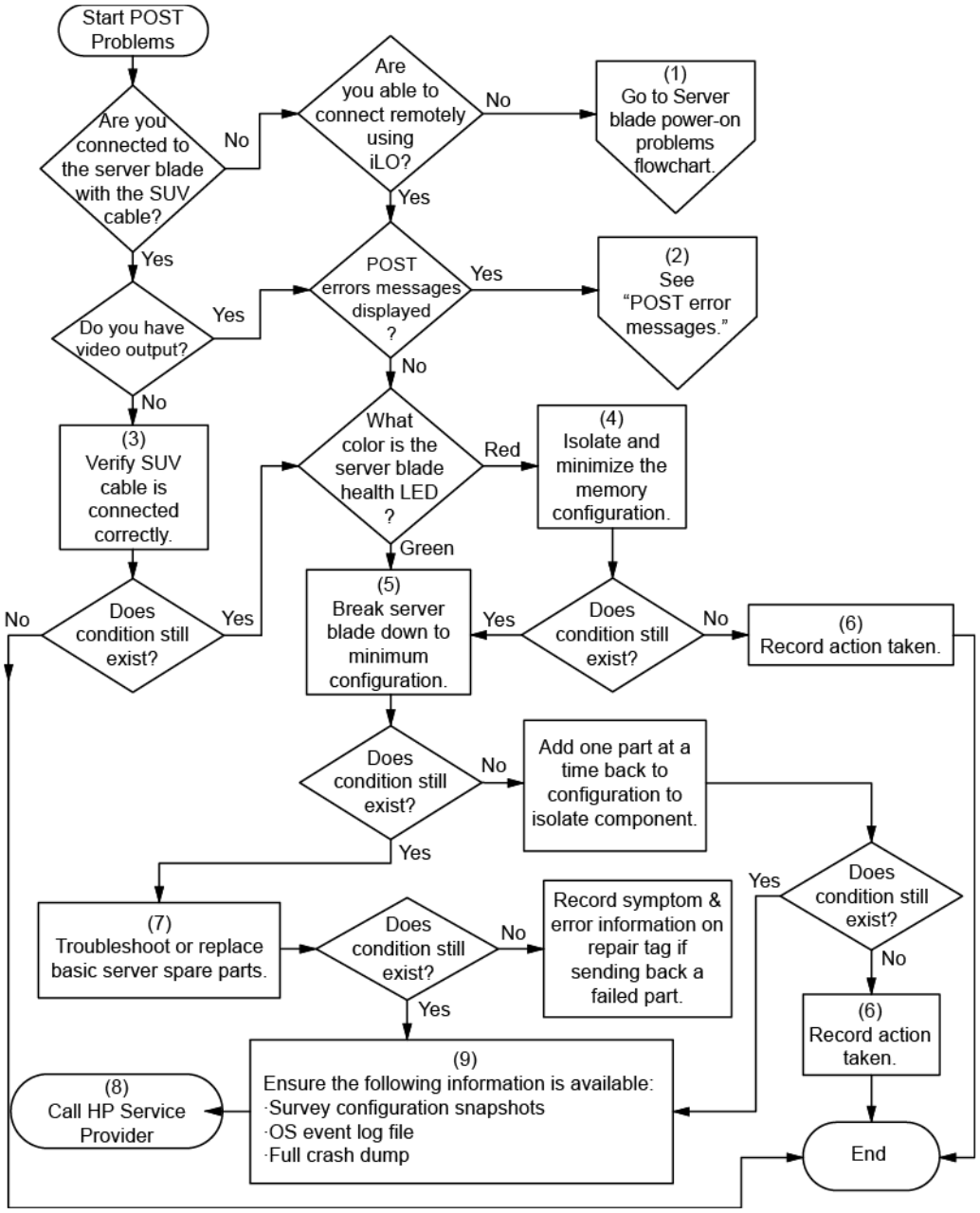

OS boot problems flowchart

There are two ways to use SmartStart when diagnosing OS boot problems on a server blade:

- Use iLO to remotely attach virtual devices to mount the SmartStart CD onto the server blade.
- Use a local I/O cable and drive to connect to the server blade, and then restart the server blade.

Symptoms:

- Server does not boot a previously installed OS
- Server does not boot SmartStart

Possible causes:

- Corrupted OS
- Hard drive subsystem problem
- Incorrect boot order setting in RBSU

Item	See
1	*HP ROM-Based Setup Utility User Guide* (*http://www.hp.com/servers/smartstart*)
2	"POST problems flowchart (on page 77)"
3	• "Hard drive problems" in the *HP ProLiant Servers Troubleshooting Guide* located on the Documentation CD or see "Troubleshooting resources (on page 67)" • Controller documentation
4	"HP Insight Diagnostics (on page 63)" or in the *HP ProLiant Servers Troubleshooting Guide* located on the Documentation CD or see "Troubleshooting resources (on page 67)"
5	• "Loose connections (on page 71)" • "CD-ROM and DVD drive problems" in the *HP ProLiant Servers Troubleshooting Guide* located on the Documentation CD or see "Troubleshooting resources (on page 67)" • Controller documentation
6	"General memory problems are occurring" in the *HP ProLiant Servers Troubleshooting Guide* located on the Documentation CD or see "Troubleshooting resources (on page 67)"
7	• "Operating system problems" in the *HP ProLiant Servers Troubleshooting Guide* located on the Documentation CD or see "Troubleshooting resources (on page 67)" • "HP contact information (on page 95)"
8	• "Hardware problems" in the *HP ProLiant Servers Troubleshooting Guide* located on the Documentation CD or see "Troubleshooting resources (on page 67)" • Maintenance and service guides for p-Class server blades, located on the Documentation CD or the HP website (http://www.hp.com/products/servers/proliant-bl/p-class/info) • Maintenance and service guides for c-Class server blades, located on the Documentation CD or the HP website (http://www.hp.com/go/bladesystem/documentation)
9	"General diagnosis flowchart (on page 73)"

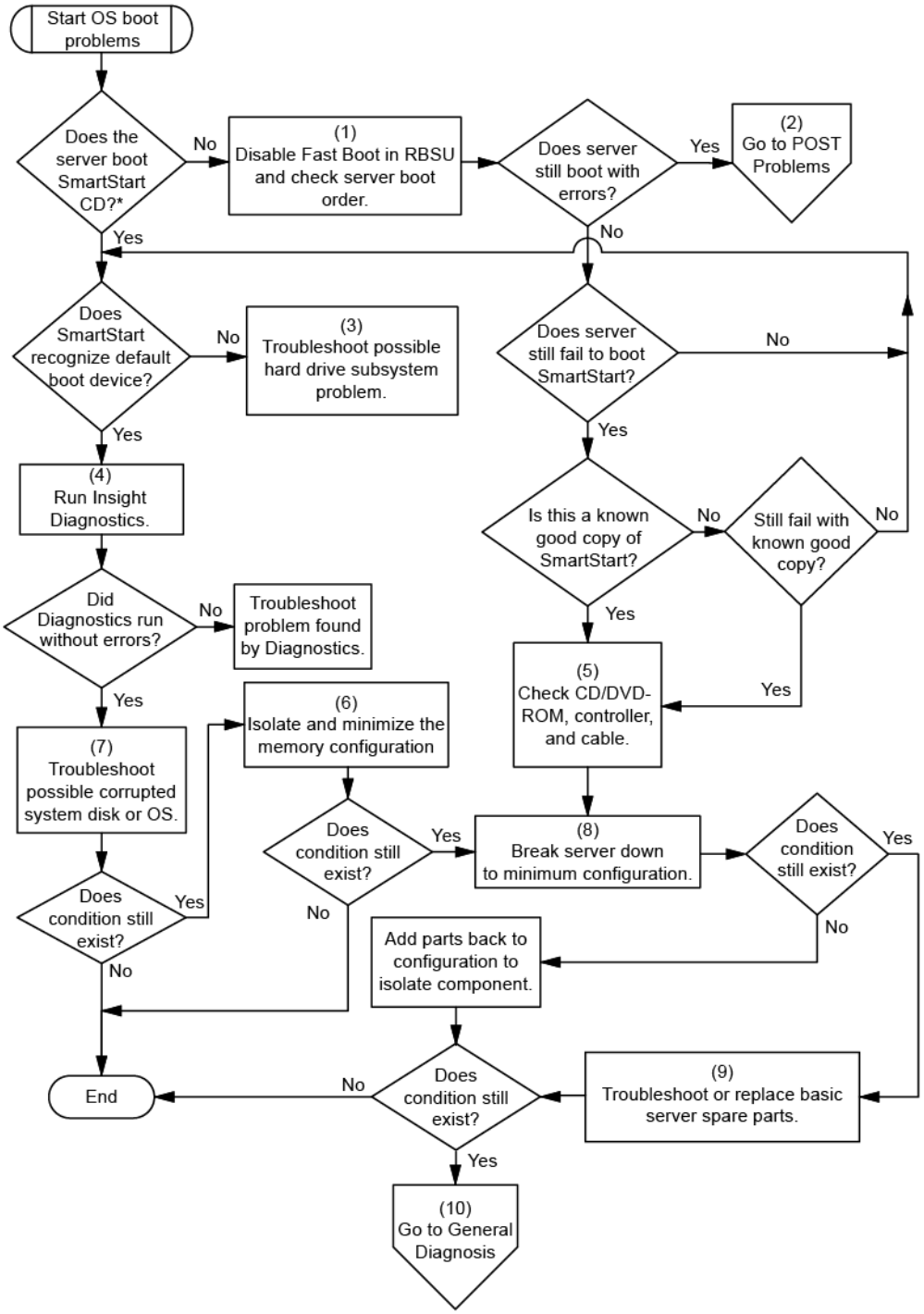

* See the server blade OS boot problems flowchart (on page 79)

Server fault indications flowchart

Symptoms:

- Server boots, but a fault event is reported by Insight Management Agents (on page 61)
- Server boots, but the internal health LED, external health LED, or component health LED is red or amber

NOTE: For the location of server LEDs and information on their statuses, refer to the server documentation.

Possible causes:

- Improperly seated or faulty internal or external component
- Unsupported component installed
- Redundancy failure
- System overtemperature condition

Item	See
1	• "Integrated Management Log (on page 63)" or in the *HP ProLiant Servers Troubleshooting Guide* located on the Documentation CD or see "Troubleshooting resources (on page 67)" • "Event list error messages" in the *HP ProLiant Servers Troubleshooting Guide* located on the Documentation CD or see "Troubleshooting resources (on page 67)"
2	"Component identification (on page 6)"
3	System Management Homepage (https://localhost:2381)
4	"Power-on problems flowchart ("Server blade power-on problems flowchart" on page 75)"
5	• "Hardware problems" in the *HP ProLiant Servers Troubleshooting Guide* located on the Documentation CD or see "Troubleshooting resources (on page 67)" • Maintenance and service guides for c-Class server blades, located on the Documentation CD or the HP website (http://www.hp.com/go/bladesystem/documentation) • "HP contact information (on page 95)"
6	• "Hardware problems" in the *HP ProLiant Servers Troubleshooting Guide* located on the Documentation CD or see "Troubleshooting resources (on page 67)" • Maintenance and service guides for c-Class server blades, located on the Documentation CD or the HP website (http://www.hp.com/go/bladesystem/documentation)

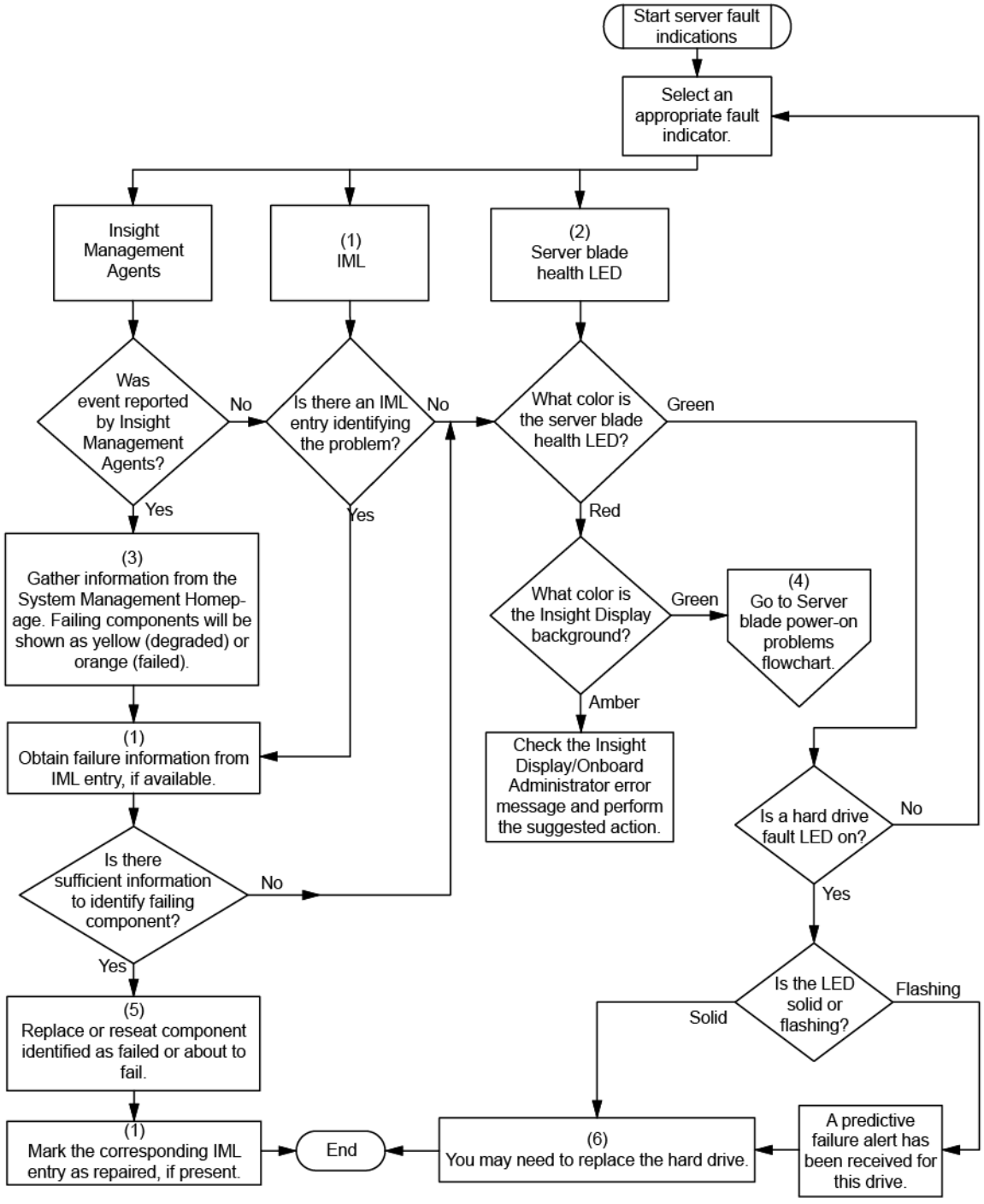

POST error messages and beep codes

Introduction to POST error messages

The error messages and codes in this section include all new messages generated by this workstation blade. Some messages are informational and do not indicate an error. A workstation blade generates only the codes that are applicable to its configuration and options.

For a complete listing of error messages, refer to the "POST error messages" in the *HP ProLiant Servers Troubleshooting Guide* located on the Documentation CD or on the HP website (http://www.hp.com/support).

⚠ **WARNING:** To avoid potential problems, ALWAYS read the warnings and cautionary information in the server documentation before removing, replacing, reseating, or modifying system components.

Battery replacement

If the workstation blade no longer automatically displays the correct date and time, you may need to replace the battery that provides power to the real-time clock. Under normal use, battery life is 5 to 10 years.

⚠ **WARNING:** The computer contains an internal lithium manganese dioxide, a vanadium pentoxide, or an alkaline battery pack. A risk of fire and burns exists if the battery pack is not properly handled. To reduce the risk of personal injury:

- Do not attempt to recharge the battery.
- Do not expose the battery to temperatures higher than 60°C (140°F).
- Do not disassemble, crush, puncture, short external contacts, or dispose of in fire or water.
- Replace only with the spare designated for this product.

Before replacing a battery, you must remove any previously installed WS460c Graphics Expansion Blade access panel and the blade.

To remove the component:

1. Power down the workstation blade (on page 14).
2. Remove the workstation blade (on page 15).
3. Remove the access panel (on page 16).
4. Identify the battery location ("System board components" on page 11).
5. Remove the battery tray.

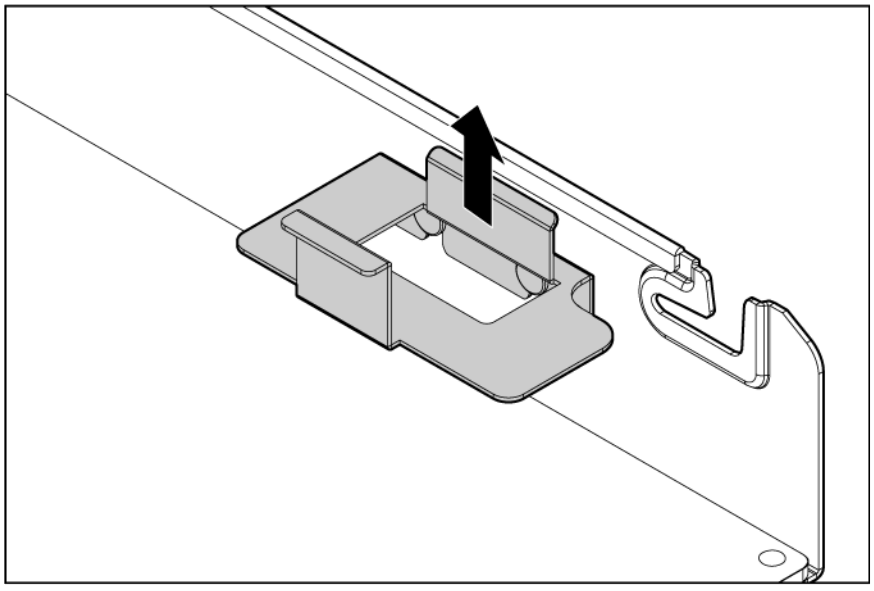

6. Remove the battery.

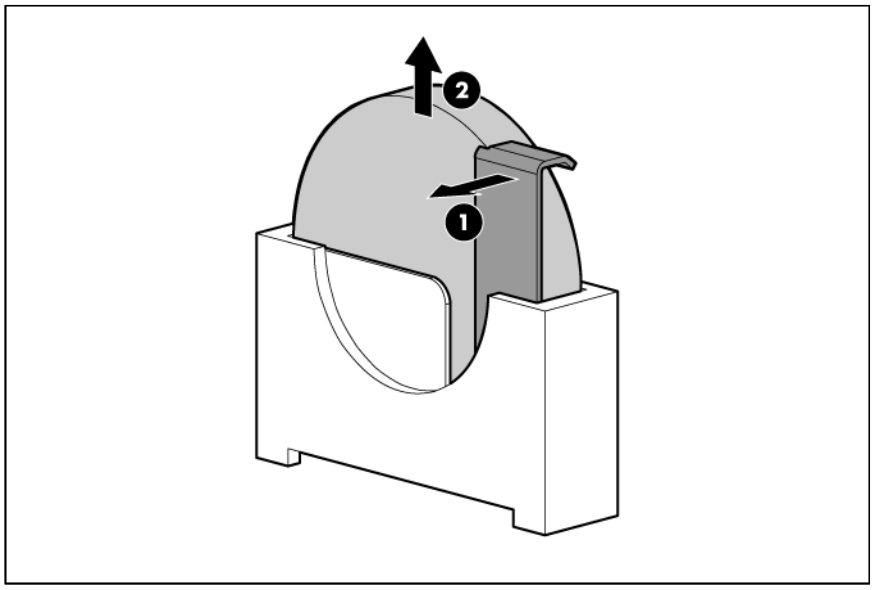

IMPORTANT: Replacing the system board battery resets the system ROM to its default configuration. After replacing the battery, reconfigure the system through RBSU.

To replace the component, reverse the removal procedure. If necessary, reinstall the WS460c Graphics Expansion Blade and the access panel.

For more information about battery replacement or proper disposal, contact an authorized reseller or an authorized service provider.

Regulatory compliance notices

Regulatory compliance identification numbers

For the purpose of regulatory compliance certifications and identification, this product has been assigned a unique regulatory model number. The regulatory model number can be found on the product nameplate label, along with all required approval markings and information. When requesting compliance information for this product, always refer to this regulatory model number. The regulatory model number is not the marketing name or model number of the product.

Federal Communications Commission notice

Part 15 of the Federal Communications Commission (FCC) Rules and Regulations has established Radio Frequency (RF) emission limits to provide an interference-free radio frequency spectrum. Many electronic devices, including computers, generate RF energy incidental to their intended function and are, therefore, covered by these rules. These rules place computers and related peripheral devices into two classes, A and B, depending upon their intended installation. Class A devices are those that may reasonably be expected to be installed in a business or commercial environment. Class B devices are those that may reasonably be expected to be installed in a residential environment (for example, personal computers). The FCC requires devices in both classes to bear a label indicating the interference potential of the device as well as additional operating instructions for the user.

FCC rating label

The FCC rating label on the device shows the classification (A or B) of the equipment. Class B devices have an FCC logo or ID on the label. Class A devices do not have an FCC logo or ID on the label. After you determine the class of the device, refer to the corresponding statement.

FCC Notice, Class A Equipment

This equipment has been tested and found to comply with the limits for a Class A digital device, pursuant to Part 15 of the FCC Rules. These limits are designed to provide reasonable protection against harmful interference when the equipment is operated in a commercial environment. This equipment generates, uses, and can radiate radio frequency energy and, if not installed and used in accordance with the instructions, may cause harmful interference to radio communications. Operation of this equipment in a residential area is likely to cause harmful interference, in which case the user will be required to correct the interference at personal expense.

FCC Notice, Class B Equipment

This equipment has been tested and found to comply with the limits for a Class B digital device, pursuant to Part 15 of the FCC Rules. These limits are designed to provide reasonable protection against harmful interference in a residential installation. This equipment generates, uses, and can radiate radio frequency energy and, if not installed and used in accordance with the instructions, may cause harmful interference to

radio communications. However, there is no guarantee that interference will not occur in a particular installation. If this equipment does cause harmful interference to radio or television reception, which can be determined by turning the equipment off and on, the user is encouraged to try to correct the interference by one or more of the following measures:

- Reorient or relocate the receiving antenna.
- Increase the separation between the equipment and receiver.
- Connect the equipment into an outlet on a circuit that is different from that to which the receiver is connected.
- Consult the dealer or an experienced radio or television technician for help.

Declaration of conformity for products marked with the FCC logo, United States only

This device complies with Part 15 of the FCC Rules. Operation is subject to the following two conditions: (1) this device may not cause harmful interference, and (2) this device must accept any interference received, including interference that may cause undesired operation.

For questions regarding this product, contact us by mail or telephone:

- Hewlett-Packard Company
  P. O. Box 692000, Mail Stop 530113
  Houston, Texas 77269-2000
- 1-800-HP-INVENT (1-800-474-6836). (For continuous quality improvement, calls may be recorded or monitored.)

For questions regarding this FCC declaration, contact us by mail or telephone:

- Hewlett-Packard Company
  P. O. Box 692000, Mail Stop 510101
  Houston, Texas 77269-2000
- 1-281-514-3333

To identify this product, refer to the part, series, or model number found on the product.

Modifications

The FCC requires the user to be notified that any changes or modifications made to this device that are not expressly approved by Hewlett-Packard Company may void the user's authority to operate the equipment.

Cables

Connections to this device must be made with shielded cables with metallic RFI/EMI connector hoods in order to maintain compliance with FCC Rules and Regulations.

Canadian notice (Avis Canadien)

Class A equipment

This Class A digital apparatus meets all requirements of the Canadian Interference-Causing Equipment Regulations.

Cet appareil numérique de la classe A respecte toutes les exigences du Règlement sur le matériel brouilleur du Canada.

Class B equipment

This Class B digital apparatus meets all requirements of the Canadian Interference-Causing Equipment Regulations.

Cet appareil numérique de la classe B respecte toutes les exigences du Règlement sur le matériel brouilleur du Canada.

European Union regulatory notice

Products bearing the CE marking comply with the following EU Directives:

- Low Voltage Directive 2006/95/EC
- EMC Directive 2004/108/EC
- Ecodesign Directive 2009/125/EC, where applicable

CE compliance of this product is valid if powered with the correct CE-marked AC adapter provided by HP.

Compliance with these directives implies conformity to applicable harmonized European standards (European Norms) that are listed in the EU Declaration of Conformity issued by HP for this product or product family and available (in English only) either within the product documentation or at the following HP website (http://www.hp.eu/certificates) (type the product number in the search field).

The compliance is indicated by one of the following conformity markings placed on the product:

For non-telecommunications products and for EU harmonized telecommunications products, such as Bluetooth® within power class below 10mW.



For EU non-harmonized telecommunications products (If applicable, a 4-digit notified body number is inserted between CE and !).



Please refer to the regulatory label provided on the product.

The point of contact for regulatory matters is Hewlett-Packard GmbH, Dept./MS: HQ-TRE, Herrenberger Strasse 140, 71034 Boeblingen, GERMANY.

Disposal of waste equipment by users in private households in the European Union

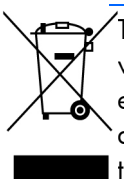

This symbol on the product or on its packaging indicates that this product must not be disposed of with your other household waste. Instead, it is your responsibility to dispose of your waste equipment by handing it over to a designated collection point for the recycling of waste electrical and electronic equipment. The separate collection and recycling of your waste equipment at the time of disposal will help to conserve natural resources and ensure that it is recycled in a manner that protects human health and the environment. For more information about where you can drop off your waste equipment for recycling, please contact your local city office, your household waste disposal service or the shop where you purchased the product.

Japanese notice

ご使用になっている装置に VCCI マークが付いていましたら、次の説明文をお読み下さい。

この装置は、クラス B 情報技術装置です。この装置は、家庭環境で使用することを目的としていますが、この装置がラジオやテレビジョン受信機に近接して使用されると、受信障害を引き起こすことがあります。取扱説明書に従って正しい取り扱いをして下さい。

VCCI-B

VCCI マークが付いていない場合には、次の点にご注意下さい。

この装置は、クラス A 情報技術装置です。この装置を家庭環境で使用すると電波妨害を引き起こすことがあります。この場合には使用者は適切な対策を講ずるよう要求されることがあります。

VCCI-A

BSMI notice

警告使用者:

這是甲類的資訊產品，在居住的環境中使用時，可能會造成射頻干擾，在這種情況下，使用者會被要求採取某些適當的對策。

Korean notice

Class A equipment

A급 기기 (업무용 방송통신기기)	이 기기는 업무용(A급)으로 전자파적합등록을 한 기기이오니 판매자 또는 사용자는 이 점을 주의하시기 바라며, 가정 외의 지역에서 사용하는 것을 목적으로 합니다.

Class B equipment

B급 기기 (가정용 방송통신기기)	이 기기는 가정용(B급)으로 전자파적합등록을 한 기기로서 주로 가정에서 사용하는 것을 목적으로 하며, 모든 지역에서 사용할 수 있습니다.

Chinese notice

Class A equipment

声明
此为 A 级产品，在生活环境中，该产品可能会造成无线电干扰。在这种情况下，可能需要用户对其干扰采取可行的措施。

Vietnam compliance marking notice

This marking is for applicable products only.

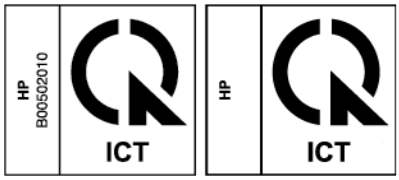

Laser compliance

This product may be provided with an optical storage device (that is, CD or DVD drive) and/or fiber optic transceiver. Each of these devices contains a laser that is classified as a Class 1 Laser Product in accordance with US FDA regulations and the IEC 60825-1. The product does not emit hazardous laser radiation.

Each laser product complies with 21 CFR 1040.10 and 1040.11 except for deviations pursuant to Laser Notice No. 50, dated June 24, 2007; and with IEC 60825-1:2007.

⚠ **WARNING:** Use of controls or adjustments or performance of procedures other than those specified herein or in the laser product's installation guide may result in hazardous radiation exposure. To reduce the risk of exposure to hazardous radiation:

- Do not try to open the module enclosure. There are no user-serviceable components inside.
- Do not operate controls, make adjustments, or perform procedures to the laser device other than those specified herein.
- Allow only HP Authorized Service technicians to repair the unit.

The Center for Devices and Radiological Health (CDRH) of the U.S. Food and Drug Administration implemented regulations for laser products on August 2, 1976. These regulations apply to laser products manufactured from August 1, 1976. Compliance is mandatory for products marketed in the United States.

Battery replacement notice

⚠ **WARNING:** The computer contains an internal lithium manganese dioxide, a vanadium pentoxide, or an alkaline battery pack. A risk of fire and burns exists if the battery pack is not properly handled. To reduce the risk of personal injury:

- Do not attempt to recharge the battery.
- Do not expose the battery to temperatures higher than 60°C (140°F).
- Do not disassemble, crush, puncture, short external contacts, or dispose of in fire or water.



Batteries, battery packs, and accumulators should not be disposed of together with the general household waste. To forward them to recycling or proper disposal, use the public collection system or return them to HP, an authorized HP Partner, or their agents.

For more information about battery replacement or proper disposal, contact an authorized reseller or an authorized service provider.

Taiwan battery recycling notice

The Taiwan EPA requires dry battery manufacturing or importing firms in accordance with Article 15 of the Waste Disposal Act to indicate the recovery marks on the batteries used in sales, giveaway or promotion. Contact a qualified Taiwanese recycler for proper battery disposal.



Acoustics statement for Germany (Geräuschemission)

Schalldruckpegel L_{pA} < 70 dB(A)

Zuschauerpositionen (bystander positions), Normaler Betrieb (normal operation)

Nach ISO 7779:1999 (Typprüfung)

Electrostatic discharge

Preventing electrostatic discharge

To prevent damaging the system, be aware of the precautions you need to follow when setting up the system or handling parts. A discharge of static electricity from a finger or other conductor may damage system boards or other static-sensitive devices. This type of damage may reduce the life expectancy of the device.

To prevent electrostatic damage:

- Avoid hand contact by transporting and storing products in static-safe containers.
- Keep electrostatic-sensitive parts in their containers until they arrive at static-free workstations.
- Place parts on a grounded surface before removing them from their containers.
- Avoid touching pins, leads, or circuitry.
- Always be properly grounded when touching a static-sensitive component or assembly.

Grounding methods to prevent electrostatic discharge

Several methods are used for grounding. Use one or more of the following methods when handling or installing electrostatic-sensitive parts:

- Use a wrist strap connected by a ground cord to a grounded workstation or computer chassis. Wrist straps are flexible straps with a minimum of 1 megohm ±10 percent resistance in the ground cords. To provide proper ground, wear the strap snug against the skin.
- Use heel straps, toe straps, or boot straps at standing workstations. Wear the straps on both feet when standing on conductive floors or dissipating floor mats.
- Use conductive field service tools.
- Use a portable field service kit with a folding static-dissipating work mat.

If you do not have any of the suggested equipment for proper grounding, have an authorized reseller install the part.

For more information on static electricity or assistance with product installation, contact an authorized reseller.

Specifications

Environmental specifications

Specification	Value
Temperature range*	—
Operating	10°C to 35°C (50°F to 95°F)
Non-operating	-30°C to 60°C (-22°F to 140°F)
Relative humidity (noncondensing)**	—
Operating	10% to 90% @ 28°C (82.4°F)
Non-operating	5% to 95% @ 38.7°C (101.7°F)
Altitude†	—
Operating	3050 m (10,000 ft)
Non-operating	9144 m (30,000 ft)

* The following temperature conditions and limitations apply:
  - All temperature ratings shown are for sea level.
  - An altitude derating of 1°C per 304.8 m (1.8°F per 1,000 ft) up to 3048 m (10,000 ft) applies.
  - No direct sunlight is allowed.
  -The maximum permissible rate of change is 10°C/hr (18°F/hr).
  - The type and number of options installed may reduce the upper temperature and humidity limits.
  - Operating with a fan fault or above 30°C (86°F) may reduce system performance.

** Storage maximum humidity of 95% is based on a maximum temperature of 45°C (113°F).

†Maximum storage altitude corresponds to a minimum pressure of 70 kPa (10.1 psia).

Server blade specifications

Specification	Value
Height	5.56 cm (2.19 in)
Depth	50.95 cm (20.06 in)
Width	18.16 cm (7.15 in)
Weight (maximum)	6.44 kg (14.20 lb)
Weight (no drives installed)	5.82 kg (12.82 lb)

Support and other resources

Before you contact HP

Be sure to have the following information available before you call HP:

- Active Health System log

  Download and have available an Active Health System log for 3 days before the failure was detected. For more information, see the *HP iLO 4 User Guide* or *HP Intelligent Provisioning User Guide* on the HP website (http://www.hp.com/go/ilo/docs).

- Onboard Administrator SHOW ALL report (for HP BladeSystem products only)

  For more information on obtaining the Onboard Administrator SHOW ALL report, see the HP website (http://h20000.www2.hp.com/bizsupport/TechSupport/Document.jsp?lang=en&cc=us&objectID=c02843807).

- Technical support registration number (if applicable)
- Product serial number
- Product model name and number
- Product identification number
- Applicable error messages
- Add-on boards or hardware
- Third-party hardware or software
- Operating system type and revision level

HP contact information

For United States and worldwide contact information, see the Contact HP website (http://www.hp.com/go/assistance).

In the United States:

- To contact HP by phone, call 1-800-334-5144. For continuous quality improvement, calls may be recorded or monitored.
- If you have purchased a Care Pack (service upgrade), see the Support & Drivers website (http://www8.hp.com/us/en/support-drivers.html). If the problem cannot be resolved at the website, call 1-800-633-3600. For more information about Care Packs, see the HP website (http://pro-aq-sama.houston.hp.com/services/cache/10950-0-0-225-121.html).

Customer Self Repair

HP products are designed with many Customer Self Repair (CSR) parts to minimize repair time and allow for greater flexibility in performing defective parts replacement. If during the diagnosis period HP (or HP service

providers or service partners) identifies that the repair can be accomplished by the use of a CSR part, HP will ship that part directly to you for replacement. There are two categories of CSR parts:

- **Mandatory**—Parts for which customer self repair is mandatory. If you request HP to replace these parts, you will be charged for the travel and labor costs of this service.
- **Optional**—Parts for which customer self repair is optional. These parts are also designed for customer self repair. If, however, you require that HP replace them for you, there may or may not be additional charges, depending on the type of warranty service designated for your product.

NOTE: Some HP parts are not designed for customer self repair. In order to satisfy the customer warranty, HP requires that an authorized service provider replace the part. These parts are identified as "No" in the Illustrated Parts Catalog.

Based on availability and where geography permits, CSR parts will be shipped for next business day delivery. Same day or four-hour delivery may be offered at an additional charge where geography permits. If assistance is required, you can call the HP Technical Support Center and a technician will help you over the telephone. HP specifies in the materials shipped with a replacement CSR part whether a defective part must be returned to HP. In cases where it is required to return the defective part to HP, you must ship the defective part back to HP within a defined period of time, normally five (5) business days. The defective part must be returned with the associated documentation in the provided shipping material. Failure to return the defective part may result in HP billing you for the replacement. With a customer self repair, HP will pay all shipping and part return costs and determine the courier/carrier to be used.

For more information about HP's Customer Self Repair program, contact your local service provider. For the North American program, refer to the HP website (http://www.hp.com/go/selfrepair).

Réparation par le client (CSR)

Les produits HP comportent de nombreuses pièces CSR (Customer Self Repair = réparation par le client) afin de minimiser les délais de réparation et faciliter le remplacement des pièces défectueuses. Si pendant la période de diagnostic, HP (ou ses partenaires ou mainteneurs agréés) détermine que la réparation peut être effectuée à l'aide d'une pièce CSR, HP vous l'envoie directement. Il existe deux catégories de pièces CSR:

Obligatoire - Pièces pour lesquelles la réparation par le client est obligatoire. Si vous demandez à HP de remplacer ces pièces, les coûts de déplacement et main d'œuvre du service vous seront facturés.

Facultatif - Pièces pour lesquelles la réparation par le client est facultative. Ces pièces sont également conçues pour permettre au client d'effectuer lui-même la réparation. Toutefois, si vous demandez à HP de remplacer ces pièces, l'intervention peut ou non vous être facturée, selon le type de garantie applicable à votre produit.

REMARQUE: Certaines pièces HP ne sont pas conçues pour permettre au client d'effectuer lui-même la réparation. Pour que la garantie puisse s'appliquer, HP exige que le remplacement de la pièce soit effectué par un Mainteneur Agréé. Ces pièces sont identifiées par la mention "Non" dans le Catalogue illustré.

Les pièces CSR sont livrées le jour ouvré suivant, dans la limite des stocks disponibles et selon votre situation géographique. Si votre situation géographique le permet et que vous demandez une livraison le jour même ou dans les 4 heures, celle-ci vous sera facturée. Pour bénéficier d'une assistance téléphonique, appelez le Centre d'assistance technique HP. Dans les documents envoyés avec la pièce de rechange CSR, HP précise s'il est nécessaire de lui retourner la pièce défectueuse. Si c'est le cas, vous devez le faire dans le délai indiqué, généralement cinq (5) jours ouvrés. La pièce et sa documentation doivent être retournées dans l'emballage fourni. Si vous ne retournez pas la pièce défectueuse, HP se réserve le droit de vous facturer les coûts de remplacement. Dans le cas d'une pièce CSR, HP supporte l'ensemble des frais d'expédition et de retour, et détermine la société de courses ou le transporteur à utiliser.

Pour plus d'informations sur le programme CSR de HP, contactez votre Mainteneur Agrée local. Pour plus d'informations sur ce programme en Amérique du Nord, consultez le site Web HP (http://www.hp.com/go/selfrepair).

Riparazione da parte del cliente

Per abbreviare i tempi di riparazione e garantire una maggiore flessibilità nella sostituzione di parti difettose, i prodotti HP sono realizzati con numerosi componenti che possono essere riparati direttamente dal cliente (CSR, Customer Self Repair). Se in fase di diagnostica HP (o un centro di servizi o di assistenza HP) identifica il guasto come riparabile mediante un ricambio CSR, HP lo spedirà direttamente al cliente per la sostituzione. Vi sono due categorie di parti CSR:

Obbligatorie – Parti che devono essere necessariamente riparate dal cliente. Se il cliente ne affida la riparazione ad HP, deve sostenere le spese di spedizione e di manodopera per il servizio.

Opzionali – Parti la cui riparazione da parte del cliente è facoltativa. Si tratta comunque di componenti progettati per questo scopo. Se tuttavia il cliente ne richiede la sostituzione ad HP, potrebbe dover sostenere spese addizionali a seconda del tipo di garanzia previsto per il prodotto.

NOTA: alcuni componenti HP non sono progettati per la riparazione da parte del cliente. Per rispettare la garanzia, HP richiede che queste parti siano sostituite da un centro di assistenza autorizzato. Tali parti sono identificate da un "No" nel Catalogo illustrato dei componenti.

In base alla disponibilità e alla località geografica, le parti CSR vengono spedite con consegna entro il giorno lavorativo seguente. La consegna nel giorno stesso o entro quattro ore è offerta con un supplemento di costo solo in alcune zone. In caso di necessità si può richiedere l'assistenza telefonica di un addetto del centro di supporto tecnico HP. Nel materiale fornito con una parte di ricambio CSR, HP specifica se il cliente deve restituire dei componenti. Qualora sia richiesta la resa ad HP del componente difettoso, lo si deve spedire ad HP entro un determinato periodo di tempo, generalmente cinque (5) giorni lavorativi. Il componente difettoso deve essere restituito con la documentazione associata nell'imballo di spedizione fornito. La mancata restituzione del componente può comportare la fatturazione del ricambio da parte di HP. Nel caso di riparazione da parte del cliente, HP sostiene tutte le spese di spedizione e resa e sceglie il corriere/vettore da utilizzare.

Per ulteriori informazioni sul programma CSR di HP contattare il centro di assistenza di zona. Per il programma in Nord America fare riferimento al sito Web HP (http://www.hp.com/go/selfrepair).

Customer Self Repair

HP Produkte enthalten viele CSR-Teile (Customer Self Repair), um Reparaturzeiten zu minimieren und höhere Flexibilität beim Austausch defekter Bauteile zu ermöglichen. Wenn HP (oder ein HP Servicepartner) bei der Diagnose feststellt, dass das Produkt mithilfe eines CSR-Teils repariert werden kann, sendet Ihnen HP dieses Bauteil zum Austausch direkt zu. CSR-Teile werden in zwei Kategorien unterteilt:

Zwingend – Teile, für die das Customer Self Repair-Verfahren zwingend vorgegeben ist. Wenn Sie den Austausch dieser Teile von HP vornehmen lassen, werden Ihnen die Anfahrt- und Arbeitskosten für diesen Service berechnet.

Optional – Teile, für die das Customer Self Repair-Verfahren optional ist. Diese Teile sind auch für Customer Self Repair ausgelegt. Wenn Sie jedoch den Austausch dieser Teile von HP vornehmen lassen möchten, können bei diesem Service je nach den für Ihr Produkt vorgesehenen Garantiebedingungen zusätzliche Kosten anfallen.

HINWEIS: Einige Teile sind nicht für Customer Self Repair ausgelegt. Um den Garantieanspruch des Kunden zu erfüllen, muss das Teil von einem HP Servicepartner ersetzt werden. Im illustrierten Teilekatalog sind diese Teile mit „No“ bzw. „Nein“ gekennzeichnet.

CSR-Teile werden abhängig von der Verfügbarkeit und vom Lieferziel am folgenden Geschäftstag geliefert. Für bestimmte Standorte ist eine Lieferung am selben Tag oder innerhalb von vier Stunden gegen einen Aufpreis verfügbar. Wenn Sie Hilfe benötigen, können Sie das HP technische Support Center anrufen und sich von einem Mitarbeiter per Telefon helfen lassen. Den Materialien, die mit einem CSR-Ersatzteil geliefert werden, können Sie entnehmen, ob das defekte Teil an HP zurückgeschickt werden muss. Wenn es erforderlich ist, das defekte Teil an HP zurückzuschicken, müssen Sie dies innerhalb eines vorgegebenen Zeitraums tun, in der Regel innerhalb von fünf (5) Geschäftstagen. Das defekte Teil muss mit der zugehörigen Dokumentation in der Verpackung zurückgeschickt werden, die im Lieferumfang enthalten ist. Wenn Sie das defekte Teil nicht zurückschicken, kann HP Ihnen das Ersatzteil in Rechnung stellen. Im Falle von Customer Self Repair kommt HP für alle Kosten für die Lieferung und Rücksendung auf und bestimmt den Kurier-/Frachtdienst.

Weitere Informationen über das HP Customer Self Repair Programm erhalten Sie von Ihrem Servicepartner vor Ort. Informationen über das CSR-Programm in Nordamerika finden Sie auf der HP Website unter (http://www.hp.com/go/selfrepair).

Reparaciones del propio cliente

Los productos de HP incluyen muchos componentes que el propio usuario puede reemplazar (*Customer Self Repair*, CSR) para minimizar el tiempo de reparación y ofrecer una mayor flexibilidad a la hora de realizar sustituciones de componentes defectuosos. Si, durante la fase de diagnóstico, HP (o los proveedores o socios de servicio de HP) identifica que una reparación puede llevarse a cabo mediante el uso de un componente CSR, HP le enviará dicho componente directamente para que realice su sustitución. Los componentes CSR se clasifican en dos categorías:

- **Obligatorio:** componentes para los que la reparación por parte del usuario es obligatoria. Si solicita a HP que realice la sustitución de estos componentes, tendrá que hacerse cargo de los gastos de desplazamiento y de mano de obra de dicho servicio.
- **Opcional:** componentes para los que la reparación por parte del usuario es opcional. Estos componentes también están diseñados para que puedan ser reparados por el usuario. Sin embargo, si precisa que HP realice su sustitución, puede o no conllevar costes adicionales, dependiendo del tipo de servicio de garantía correspondiente al producto.

NOTA: Algunos componentes no están diseñados para que puedan ser reparados por el usuario. Para que el usuario haga valer su garantía, HP pone como condición que un proveedor de servicios autorizado realice la sustitución de estos componentes. Dichos componentes se identifican con la palabra "No" en el catálogo ilustrado de componentes.

Según la disponibilidad y la situación geográfica, los componentes CSR se enviarán para que lleguen a su destino al siguiente día laborable. Si la situación geográfica lo permite, se puede solicitar la entrega en el mismo día o en cuatro horas con un coste adicional. Si precisa asistencia técnica, puede llamar al Centro de asistencia técnica de HP y recibirá ayuda telefónica por parte de un técnico. Con el envío de materiales para la sustitución de componentes CSR, HP especificará si los componentes defectuosos deberán devolverse a HP. En aquellos casos en los que sea necesario devolver algún componente a HP, deberá hacerlo en el periodo de tiempo especificado, normalmente cinco días laborables. Los componentes defectuosos deberán devolverse con toda la documentación relacionada y con el embalaje de envío. Si no enviara el componente defectuoso requerido, HP podrá cobrarle por el de sustitución. En el caso de todas

sustituciones que lleve a cabo el cliente, HP se hará cargo de todos los gastos de envío y devolución de componentes y escogerá la empresa de transporte que se utilice para dicho servicio.

Para obtener más información acerca del programa de Reparaciones del propio cliente de HP, póngase en contacto con su proveedor de servicios local. Si está interesado en el programa para Norteamérica, visite la página web de HP siguiente (http://www.hp.com/go/selfrepair).

Customer Self Repair

Veel onderdelen in HP producten zijn door de klant zelf te repareren, waardoor de reparatieduur tot een minimum beperkt kan blijven en de flexibiliteit in het vervangen van defecte onderdelen groter is. Deze onderdelen worden CSR-onderdelen (Customer Self Repair) genoemd. Als HP (of een HP Service Partner) bij de diagnose vaststelt dat de reparatie kan worden uitgevoerd met een CSR-onderdeel, verzendt HP dat onderdeel rechtstreeks naar u, zodat u het defecte onderdeel daarmee kunt vervangen. Er zijn twee categorieën CSR-onderdelen:

Verplicht: Onderdelen waarvoor reparatie door de klant verplicht is. Als u HP verzoekt deze onderdelen voor u te vervangen, worden u voor deze service reiskosten en arbeidsloon in rekening gebracht.

Optioneel: Onderdelen waarvoor reparatie door de klant optioneel is. Ook deze onderdelen zijn ontworpen voor reparatie door de klant. Als u echter HP verzoekt deze onderdelen voor u te vervangen, kunnen daarvoor extra kosten in rekening worden gebracht, afhankelijk van het type garantieservice voor het product.

OPMERKING: Sommige HP onderdelen zijn niet ontwikkeld voor reparatie door de klant. In verband met de garantievoorwaarden moet het onderdeel door een geautoriseerde Service Partner worden vervangen. Deze onderdelen worden in de geïllustreerde onderdelencatalogus aangemerkt met "Nee".

Afhankelijk van de leverbaarheid en de locatie worden CSR-onderdelen verzonden voor levering op de eerstvolgende werkdag. Levering op dezelfde dag of binnen vier uur kan tegen meerkosten worden aangeboden, indien dit mogelijk is gezien de locatie. Indien assistentie gewenst is, belt u een HP Service Partner om via de telefoon technische ondersteuning te ontvangen. HP vermeldt in de documentatie bij het vervangende CSR-onderdeel of het defecte onderdeel aan HP moet worden geretourneerd. Als het defecte onderdeel aan HP moet worden teruggezonden, moet u het defecte onderdeel binnen een bepaalde periode, gewoonlijk vijf (5) werkdagen, retourneren aan HP. Het defecte onderdeel moet met de bijbehorende documentatie worden geretourneerd in het meegeleverde verpakkingsmateriaal. Als u het defecte onderdeel niet terugzendt, kan HP u voor het vervangende onderdeel kosten in rekening brengen. Bij reparatie door de klant betaalt HP alle verzendkosten voor het vervangende en geretourneerde onderdeel en kiest HP zelf welke koerier/transportonderneming hiervoor wordt gebruikt.

Neem contact op met een Service Partner voor meer informatie over het Customer Self Repair programma van HP. Informatie over Service Partners vindt u op de HP website (http://www.hp.com/go/selfrepair).

Reparo feito pelo cliente

Os produtos da HP são projetados com muitas peças para reparo feito pelo cliente (CSR) de modo a minimizar o tempo de reparo e permitir maior flexibilidade na substituição de peças com defeito. Se, durante o período de diagnóstico, a HP (ou fornecedores/parceiros de serviço da HP) concluir que o reparo pode ser efetuado pelo uso de uma peça CSR, a peça de reposição será enviada diretamente ao cliente. Existem duas categorias de peças CSR:

Obrigatória – Peças cujo reparo feito pelo cliente é obrigatório. Se desejar que a HP substitua essas peças, serão cobradas as despesas de transporte e mão-de-obra do serviço.

Opcional – Peças cujo reparo feito pelo cliente é opcional. Essas peças também são projetadas para o reparo feito pelo cliente. No entanto, se desejar que a HP as substitua, pode haver ou não a cobrança de taxa adicional, dependendo do tipo de serviço de garantia destinado ao produto.

OBSERVAÇÃO: Algumas peças da HP não são projetadas para o reparo feito pelo cliente. A fim de cumprir a garantia do cliente, a HP exige que um técnico autorizado substitua a peça. Essas peças estão identificadas com a marca "No" (Não), no catálogo de peças ilustrado.

Conforme a disponibilidade e o local geográfico, as peças CSR serão enviadas no primeiro dia útil após o pedido. Onde as condições geográficas permitirem, a entrega no mesmo dia ou em quatro horas pode ser feita mediante uma taxa adicional. Se precisar de auxílio, entre em contato com o Centro de suporte técnico da HP para que um técnico o ajude por telefone. A HP especifica nos materiais fornecidos com a peça CSR de reposição se a peça com defeito deve ser devolvida à HP. Nos casos em que isso for necessário, é preciso enviar a peça com defeito à HP dentro do período determinado, normalmente cinco (5) dias úteis. A peça com defeito deve ser enviada com a documentação correspondente no material de transporte fornecido. Caso não o faça, a HP poderá cobrar a reposição. Para as peças de reparo feito pelo cliente, a HP paga todas as despesas de transporte e de devolução da peça e determina a transportadora/serviço postal a ser utilizado.

Para obter mais informações sobre o programa de reparo feito pelo cliente da HP, entre em contato com o fornecedor de serviços local. Para o programa norte-americano, visite o site da HP (http://www.hp.com/go/selfrepair).

顧客自己修理保証サービス

修理時間を短縮し、故障部品の交換における高い柔軟性を確保するために、HP製品には多数の顧客自己修理（CSR）部品があります。診断の際に、CSR部品を使用すれば修理ができるとHP（HPまたはHP正規保守代理店）が判断した場合、HPはその部品を直接、お客様に発送し、お客様に交換していただきます。CSR部品には以下の2通りがあります。

- 必須 - 顧客自己修理が必須の部品。当該部品について、もしもお客様がHPに交換作業を依頼される場合には、その修理サービスに関する交通費および人件費がお客様に請求されます。
- 任意 - 顧客自己修理が任意である部品。この部品も顧客自己修理用です。当該部品について、もしもお客様がHPに交換作業を依頼される場合には、お買い上げの製品に適用される保証サービス内容の範囲内においては、別途費用を負担していただくことなく保証サービスを受けることができます。

注： HP製品の一部の部品は、顧客自己修理用ではありません。製品の保証を継続するためには、HPまたはHP正規保守代理店による交換作業が必須となります。部品カタログには、当該部品が顧客自己修理除外品である旨が記載されています。

部品供給が可能な場合、地域によっては、CSR部品を翌営業日に届くように発送します。また、地域によっては、追加費用を負担いただくことにより同日または4時間以内に届くように発送することも可能な場合があります。サポートが必要なときは、HPの修理受付窓口に電話していただければ、技術者が電話でアドバイスします。交換用のCSR部品または同梱物には、故障部品をHPに返送する必要があるかどうかが表示されています。故障部品をHPに返送する必要がある場合は、指定期限内（通常は5営業日以内）に故障部品をHPに返送してください。故障部品を返送する場合は、届いた時の梱包箱に関連書類とともに入れてください。故障部品を返送しない場合、HPから部品費用が請求されます。顧客自己修理の際には、HPは送料および部品返送費を全額負担し、使用する宅配便会社や運送会社を指定します。

客户自行维修

HP 产品提供许多客户自行维修 (CSR) 部件，以尽可能缩短维修时间和在更换缺陷部件方面提供更大的灵活性。如果在诊断期间 HP（或 HP 服务提供商或服务合作伙伴）确定可以通过使用 CSR 部件完成维修，HP 将直接把该部件发送给您进行更换。有两类 CSR 部件：

- **强制性的** — 要求客户必须自行维修的部件。如果您请求 HP 更换这些部件，则必须为该服务支付差旅费和人工费用。
- **可选的** — 客户可以选择是否自行维修的部件。这些部件也是为客户自行维修设计的。不过，如果您要求 HP 为您更换这些部件，则根据为您的产品指定的保修服务类型，HP 可能收取或不再收取任何附加费用。

注：某些 HP 部件的设计并未考虑客户自行维修。为了满足客户保修的需要，HP 要求授权服务提供商更换相关部件。这些部件在部件图解目录中标记为“否”。

CSR 部件将在下一个工作日发运（取决于备货情况和允许的地理范围）。在允许的地理范围内，可在当天或四小时内发运，但要收取额外费用。如果需要帮助，您可以致电 HP 技术支持中心，将会有技术人员通过电话为您提供帮助。HP 会在随更换的 CSR 部件发运的材料中指明是否必须将有缺陷的部件返还给 HP。如果要求您将有缺陷的部件返还给 HP，那么您必须在规定期限内（通常是五 (5) 个工作日）将缺陷部件发给 HP。有缺陷的部件必须随所提供的发运材料中的相关文件一起返还。如果未能送还有缺陷的部件，HP 可能会要求您支付更换费用。客户自行维修时，HP 将承担所有相关运输和部件返回费用，并指定快递商/承运商。

有关 HP 客户自行维修计划的详细信息，请与您当地的服务提供商联系。有关北美地区的计划，请访问 HP 网站 (http://www.hp.com/go/selfrepair)。

客戶自行維修

HP 產品設計了許多「客戶自行維修」(CSR) 的零件以減少維修時間，並且使得更換瑕疵零件時能有更大的彈性。如果在診斷期間 HP（或 HP 服務供應商或維修夥伴）辨認出此項維修工作可以藉由使用 CSR 零件來完成，則 HP 將直接寄送該零件給您作更換。CSR 零件分為兩種類別：

- **強制的** — 客戶自行維修所使用的零件是強制性的。如果您要求 HP 更換這些零件，HP 將會向您收取此服務所需的外出費用與勞動成本。
- **選購的** — 客戶自行維修所使用的零件是選購的。這些零件也設計用於客戶自行維修之用。不過，如果您要求 HP 為您更換，則可能需要也可能不需要負擔額外的費用，端視針對此產品指定的保固服務類型而定。

備註：某些 HP 零件沒有消費者可自行維修的設計。為符合客戶保固，HP 需要授權的服務供應商更換零件。這些零件在圖示的零件目錄中，被標示為「否」。

基於材料取得及環境允許的情況下，CSR 零件將於下一個工作日以快遞寄送。在環境的允許下當天或四小時內送達，則可能需要額外的費用。若您需要協助，可致電「HP 技術支援中心」，會有一位技術人員透過電話來協助您。不論損壞的零件是否必須退回，HP 皆會在與 CSR 替換零件一起運送的材料中註明。若要將損壞的零件退回 HP，您必須在指定的一段時間內（通常為五 (5) 個工作天），將損壞的零件寄回 HP。損壞的零件必須與寄送資料中隨附的相關技術文件一併退還。如果無法退還損壞的零件，HP 可能要向您收取替換費用。針對客戶自行維修情形，HP 將負責所有運費及零件退還費用並指定使用何家快遞/貨運公司。

如需 HP 的「客戶自行維修」方案詳細資訊，請連絡您當地的服務供應商。至於北美方案，請參閱 HP 網站 (http://www.hp.com/go/selfrepair)。

고객 셀프 수리

HP 제품은 수리 시간을 최소화하고 결함이 있는 부품 교체 시 더욱 융통성을 발휘할 수 있도록 하기 위해 고객 셀프 수리(CSR) 부품을 다량 사용하여 설계되었습니다. 진단 기간 동안 HP(또는 HP 서비스 공급업체 또는 서비스 협력업체)에서 CSR 부품을 사용하여 수리가 가능하다고 판단되면 HP는 해당 부품을 바로 사용자에게 보내어 사용자가 교체할 수 있도록 합니다. CSR 부품에는 두 가지 종류가 있습니다.

- **고객 셀프 수리가 의무 사항인 필수 부품.** 사용자가 HP에 이 부품의 교체를 요청할 경우 이 서비스에 대한 출장비 및 작업비가 청구됩니다.
- **고객 셀프 수리가 선택 사항인 부품.** 이 부품들도 고객 셀프 수리가 가능하도록 설계되었습니다. 하지만 사용자가 HP에 이 부품의 교체를 요청할 경우 사용자가 구입한 제품에 해당하는 보증 서비스 유형에 따라 추가 비용 없이 교체가 가능할 수 있습니다.

참고: 일부 HP 부품은 고객 셀프 수리가 불가능하도록 설계되었습니다. HP는 만족스러운 고객 보증을 위해 공인 서비스 제공업체를 통해 부품을 교체하도록 하고 있습니다. 이러한 부품들은 Illustrated Parts Catalog에 "No"라고 표시되어 있습니다.

CSR 부품은 재고 상태와 지리적 조건이 허용하는 경우 다음 영업일 납품이 가능하도록 배송이 이루어집니다. 지리적 조건이 허용하는 경우 추가 비용이 청구되는 조건으로 당일 또는 4시간 배송이 가능할 수도 있습니다. 도움이 필요하시면 HP 기술 지원 센터로 전화하십시오. 전문 기술자가 전화로 도움을 줄 것입니다. HP는 결함이 발생한 부품을 HP로 반환해야 하는지 여부를 CSR 교체 부품과 함께 배송된 자료에 지정합니다. 결함이 발생한 부품을 HP로 반환해야 하는 경우에는 지정된 기간 내(통상 영업일 기준 5일)에 HP로 반환해야 합니다. 이 때 결함이 발생한 부품은 제공된 포장 재료에 넣어 관련 설명서와 함께 반환해야 합니다. 결함이 발생한 부품을 반환하지 않는 경우 HP가 교체 부품에 대해 비용을 청구할 수 있습니다. 고객 셀프 수리의 경우, HP는 모든 운송 및 부품 반환 비용을 부담하며 이용할 운송업체 및 택배 서비스를 결정합니다.

HP 고객 셀프 수리 프로그램에 대한 자세한 내용은 가까운 서비스 제공업체에 문의하십시오. 북미 지역의 프로그램에 대해서는 HP 웹 사이트(http://www.hp.com/go/selfrepair)를 참조하십시오.

Acronyms and abbreviations

ABEND

abnormal end

ACU

Array Configuration Utility

ADU

Array Diagnostics Utility

AMP

Advanced Memory Protection

ASR

Automatic Server Recovery

BBWC

battery-backed write cache

BMC

baseboard management controller

iLO 2

Integrated Lights-Out 2

IML

Integrated Management Log

ORCA

Option ROM Configuration for Arrays

POST

Power-On Self Test

PXE

preboot execution environment

RBSU

ROM-Based Setup Utility

SAS

serial attached SCSI

SATA

serial ATA

SIM

Systems Insight Manager

UID

unit identification

USB

universal serial bus

VCA

Version Control Agent

Documentation feedback

HP is committed to providing documentation that meets your needs. To help us improve the documentation, send any errors, suggestions, or comments to Documentation Feedback (mailto:docsfeedback@hp.com). Include the document title and part number, version number, or the URL when submitting your feedback.

Index

A

access panel 15
acoustics statement for Germany 91
ACU (Array Configuration Utility) 57
additional information 66
ADU (Array Diagnostic Utility) 63
Advanced ECC memory 37, 38
Array Configuration Utility (ACU) 57
Array Diagnostic Utility (ADU) 63
ASR (Automatic Server Recovery) 59
authorized reseller 94
auto-configuration process 56
Automatic Server Recovery (ASR) 59

B

Basic Input/Output System (BIOS) 56, 59
batteries, replacing 84, 90
battery 10, 90
battery replacement notice 90
BBWC (battery-backed write cache) 41
BBWC battery pack 41
beep codes 82
before you contact HP 94
BIOS (Basic Input/Output System) 56, 59
BIOS Serial Console 56
BIOS upgrade 59
boot diskette 54
boot options 56
BSMI notice 89
buttons 6

C

cables 46, 70, 87
cables, FCC compliance 87
cables, troubleshooting 70
cabling 46
cache module 41
cache module battery pack 41
Canadian notice 87
Care Pack 64
CD-ROM deployment 53
Change Control 64
Chinese notice 90
class A equipment 86
class B equipment 86
compliance 86
components 6, 7
components, identification 6, 9
configuration of system 49, 55
configuration parameters 54
configuration tools 55
configuration, network 50
configuring graphics expansion blade with HBA 18
connecting to the network 25
connection problems 70
connectors 6
contact information 94
contacting HP 94
creating a disk image 53, 54
CSR (customer self repair) 94
customer self repair (CSR) 94

D

Declaration of Conformity 87
default settings 37
deployment infrastructure 51
deployment methods 49, 50
deployment overview 50
DHCP server 49
diagnosing problems 66, 72
diagnostic tools 55, 59, 62
diagnostics utility 62
DIMM baffles 15
DIMM identification 36
DIMM installation guidelines 38
DIMM population guidelines 38
DIMM slot locations 10, 11
DIMM slots 38
DIMMs 10, 35, 40, 57
DIMMs, installation 40
DIMMs, single- and dual-rank 35
disposal, battery 88, 90
disposal, waste 88
documentation 54, 104
drivers 49

drives 9, 10, 29

E

electrostatic discharge 92
enclosure connector 10
environmental specifications 93
Erase Utility 60
error messages 82
European Union notice 88
external cables 46

F

FCC (Federal Communications Commission) notice 86, 87
FCC rating label 86
features 6
Federal Communications Commission (FCC) notice 86, 87
firmware upgrade utility, troubleshooting 66
flowcharts 71, 72, 74, 76, 78, 80
front panel buttons 6, 7
front panel components 6, 7
front panel LEDs 7, 8

G

general diagnosis flowchart 72
grounding methods 92

H

hard drive backplane connector 10
hard drive bays 6, 7
hard drive LEDs 9, 10
hard drives, determining status of 9, 10
hard drives, installing 29
hardware options 29
hardware options installation 29
health driver 59
health LEDs 7, 8, 9, 10, 70
help resources 94
HP c-Class Blade SUV Cable 6, 7, 12, 46
HP contact information 94
HP Insight Control server deployment 51
HP Insight Diagnostics 62
HP Insight Diagnostics survey functionality 62
HP Insight Remote Support software 63
HP ProLiant Essentials Foundation Pack 60
HP Smart Update Manager overview 65
HP StorageWorks Library and Tape Tools (L&TT) 60
HP Systems Insight Manager overview 60
HP technical support 94
HP website 94
HP, contacting 94

I

identification number 86
iLO 2 (Integrated Lights-Out 2) 49, 50, 59
iLO 2 activity LED 59
iLO 2 advanced features 49
IML (Integrated Management Log) 62
Important Safety Information document 66
Insight Diagnostics 62, 64
installation, server options 29
installing hardware 29
installing memory 40
installing operating system 50
installing server blade options 29
installing server options 29
installing the access panel 15
Integrated Lights-Out 2 (iLO 2) 49, 59
Integrated Management Log (IML) 62
internal health LED 9, 10
internal USB connector 61

J

Japanese notice 89

K

Korean notices 89

L

laser compliance 90
laser devices 90
LED, health 7, 8, 9, 70
LED, power button 7, 8
LED, system power 7, 8
LEDs 6, 10
LEDs, hard drive 9, 10
LEDs, NIC 7, 8
LEDs, SAS hard drive 9
LEDs, SATA hard drive 9
LEDs, troubleshooting 66
LEDs, unit identification (UID) 7, 8
Lights-Out network-based deployment 49, 50
local KVM, accessing a server blade with 46

lockstep memory 37, 39, 57
loose connections 70

M

maintenance guidelines 64
Management Agents 60
management tools 49, 59
memory 35, 36, 57
memory configurations 36
memory options 29
memory subsystem architecture 35
memory, mirrored 37, 38, 57
mezzanine board connectors 10
mezzanine connectors 10, 11
mirrored memory 37, 38, 57
modifications, FCC notice 87

N

network connections 25
network-based PXE deployment 50
NIC (network interface card) 10

O

Online ROM Flash Component Utility 64
operating systems 64
operations 13
Option ROM Configuration for Arrays (ORCA) 58
options installation 29
ORCA (Option ROM Configuration for Arrays) 58
OS boot problems flowchart 78
overview 25

P

phone numbers 94
POST error messages 82
POST problems flowchart 76
power button LED 7, 8
Power On button 6, 7
powering down 13
powering up 55
power-on problems flowchart 74
preboot execution environment (PXE) 50
pre-diagnostic steps 66
preparation procedures 13, 68
preparing the server for diagnosis 68
problem diagnosis 66
processor option 25, 30
processor socket 10
processors 10, 69
Product ID 58
ProLiant Support Pack (PSP) 64
PSP (ProLiant Support Pack) 64
PSPs, overview 64
PXE (preboot execution environment) 50
PXE deployment 50

R

RBSU (ROM-Based Setup Utility) 55
RBSU configuration 55
RDIMM configuration 37
redundant ROM 60
regulatory compliance identification numbers 86
regulatory compliance notices 86, 88, 91
release button 6, 7
remote support and analysis tools 63
removing the access panel 15
removing the server blade 14
required information 94
resources 54, 66, 94
resources, troubleshooting 66
ROM legacy USB support 61
ROM redundancy 60
ROM, updating 64
ROM-Based Setup Utility (RBSU) 55
ROMPaq utility 59, 60

S

safety considerations 61, 66
safety information 61
SAN configuration 54, 57
SAS drives 10
SAS hard drive LEDs 9, 10
SAS/SATA LED combinations 10
SATA hard drive 10
SATA hard drive LEDs 9, 10
scripted installation 51
serial connector 12
serial label pull tab 6, 7
serial number 58
series number 86
server blade release lever 6
server blade removal 14
server fault indications flowchart 80
server features and options 29
server options, installing 29
server specifications 93
service notifications 70

setting up a network 50
setup 25
Smart Update Manager 65
SmartStart Scripting Toolkit 51
software components 49
specifications 93
specifications, environmental 93
specifications, server blade 93
standards 86
start diagnosis flowchart 71
static electricity 92
StorageWorks Library and Tape Tools (L&TT) 60
support 63, 94
supported operating systems 64
SUV connector 6, 12, 46
symbols on equipment 67
symptom information 68
system board 10
system board battery 10, 90
system board thumbscrews 10
system components 6
system configuration settings 55, 61
System Erase Utility 60
system maintenance switch 10, 12
System Online ROM flash component utility 64
system, keeping current 64
Systems Insight Manager 60

T

Taiwan battery recycling notice 91
technical support 94
telephone numbers 94
troubleshooting 66, 71
troubleshooting flowcharts 71
troubleshooting resources 66
troubleshooting, firmware upgrade utility 66

U

UDIMM configuration 37
updating drivers 49
updating the system ROM 60
updating, FCA device driver 54
USB connectors 12
USB devices 46
USB support 61
utilities 49
utilities, deployment 51, 55

V

video connector 12
video connector cabling 12
video devices 46
virtual CD/DVD-ROM 53
virtual floppy 54

W

warnings 67
website, HP 94