RETIRED: This document has been officially retired, and the base products listed herein are now considered obsolete and are no longer available for sale. Consequently, the information contained within may no longer be current. This document is provided exclusively for reference and informational purposes.

Overview

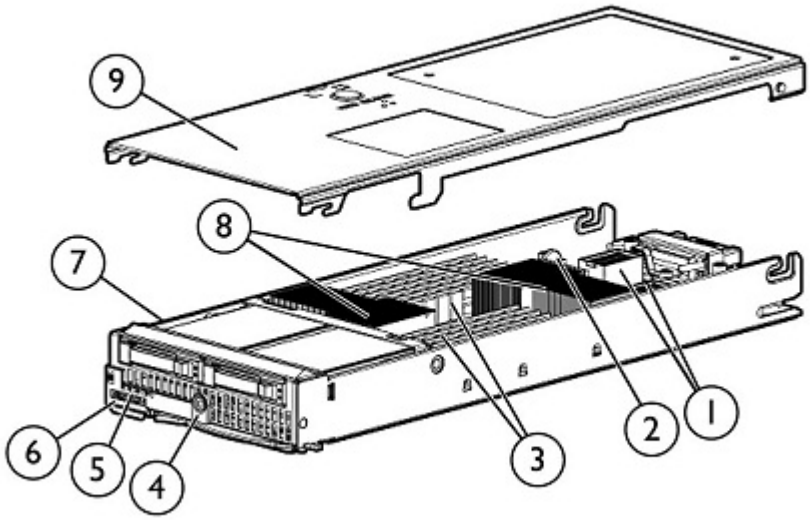

HP ProLiant WS460c G6 Workstation Blade

1. Two (2) mezzanine I/O expansion slots
2. Internal USB connector
3. Twelve (12) DDR3 Registered or Un-buffered DIMM Memory Slots
4. HP Smart Array P410i Controller
5. Two (2) small form factor (SFF) hot-plug drive bays
6. Local I/O Connector
7. Internal SD card slot
8. Up to two (2) Intel® Xeon® 5600 series processors
9. Access Panel

Overview

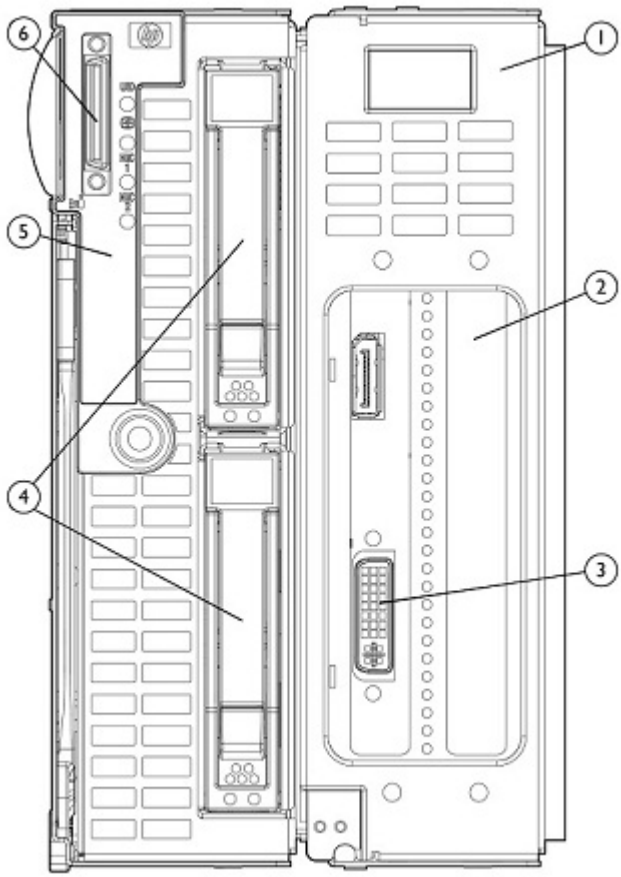

HP ProLiant WS460c G6 Workstation Blade with HP WS460c G6 Graphics Expansion Blade

1. HP Graphics Expansion Blade
2. Standard full length PCI Express Generation 2 (x8) slot 2; (shown vacant)
3. Standard full-length PCI Express Generation 2 (x8); slot 1 (shown with graphics card)
4. Small form factor (SFF) drive bays
5. HP ProLiant xw460c Blade Workstation base system
6. Local I/O Connector

What's New

- Support for Multi-GPU Pass-through with Citrix XenServer 6 Enterprise or Platinum Edition
- Support for HP SAS 6G Enterprise Hard Drive

At A Glance

This document covers the HP ProLiant WS460c G6 workstation blade and its specific options. For more information on HP BladeSystem c-Class Enclosures and HP BladeSystem c-Class Interconnect and Mezzanine Components, please see the following:

HP BladeSystem c-Class Enclosures QuickSpecs:
HP BladeSystem c3000 Enclosure QuickSpecs:

Overview

http://h18000.www1.hp.com/products/quickspecs/12790_div/12790_div.html

HP BladeSystem c7000 Enclosure QuickSpecs:
http://h18000.www1.hp.com/products/quickspecs/12810_div/12810_div.html

HP BladeSystem c-Class Interconnect and Mezzanine Components:
http://h18004.www1.hp.com/products/blades/components/c-class-interconnects.html
http://h18004.www1.hp.com/products/blades/components/c-class-adapters.html

The HP ProLiant WS460c G6 provides greater 2P x86 server blade density without compromise and maximum power-efficiency with flexibility and choice.

HP ProLiant WS460c G6 workstation blade and optional HP WS460c G6 graphics expansion blade includes:

- **Processor**:
  - o Up to two (2) Intel® Xeon® 5600 Series processors
  - Intel® 5500 Chipset
- **Memory**:
  - Twelve (12) DIMM slots
  - Up to 192GB, using PC3-8500 DDR3 Registered (RDIMM) memory, operating at 800MHz when fully populated at 2 DIMMs per Channel in 12 slots
  - Up to 48GB, using PC3-10600 DDR3 Unbuffered (UDIMM) memory, operating at 1333MHz when fully populated at 2 DIMMs per Channel in 12 slots
- **Storage Controller**:
  - HP Smart Array P410i Controller (RAID 0/1) with optional 256MB or 512MB Battery-Backed Write Cache (BBWC)
- **Internal Drive Support**:
  - Up to two (2) small form factor (SFF) SAS hot plug hard disk drives
- **Network Controller**:
  - Embedded NC532i Dual Port Flex-10 10GbE Multifunction Server Adapter
    One (1) additional 10/100 server adapter dedicated to iLO 2 Management
- **Mezzanine Support**:
  - Two (2) I/O expansion or graphics adapter mezzanine slots
  - Supports up to (2) mezzanine cards
    - Graphics adapter mezzanine (NVIDIA Quadro FX2800M)
    - 4GB Dual-Port Fibre Channel Mezzanine options for SAN connectivity (Choice of Emulex or QLogic)
    - Now supporting the configuration to simultaneously run a mezzanine option card in Workstation Blade and a PCI express single slot graphics card in the Graphics Expansion Blade.
    - 4X QDR (40Gbps) and DDR (20Gbps) InfiniBand (IB) Mezzanine options for low latency and high bandwidth server interconnectivity. All QDR option support is supported on Red Hat Linux Operating System only.
- **Graphics Adapter**:
  - Professional 2D & 3D graphics with hardware acceleration via graphics subsystem
  - NVIDIA Quadro FX 880M with 1G (Single or dual cards configuration capable)
    - For professional 2D & 3D graphics with hardware acceleration via graphics subsytem
    - 1G (DDR3) memory
    - Supports up to two displays
    - Mezzanine card can occupy either mezzanine slot 1 or 2
    - GPU Pass-through not supported on this device
  - NVIDIA Quadro FX 2800M (Single card configuration only)
    - For professional mid-range graphics application
    - 1G (GDDR3) memory
    - Supports up to two displays

Overview

- Mezzanine card which occupies mezzanine slot 2
- GPU Pass-through not supported on this device

- NVIDIA Quadro 4000 (Single wide PCIe-x16 in graphics expansion blade)
  - For professional mid-range graphics and stereoscopic 3D, scalable visualization and 3D high-definition broadcasting
  - 2GB (GDDR5) memory
  - Supports up to two displays
  - PCe-x16 full height card (Two per Graphics Expansion Blade)
  - GPU Pass-through with
    - NVIDIA driver 261.xx or greater
    - Citrix XenDesktop 5.5 Enterprise/Platnium, XenServer 6 Enterprise / Platinum editions
- NVIDIA Quadro 5000 (Double Wide PCIe-x16 in graphics expansion blade)
  - For high-end 3D graphics, M&E animation and CAD applications
  - 2.5G (GDDR5) memory
  - Supports up to two displays
  - PCe-x16 full height card (one per Graphics Expansion Blade)
  - GPU Pass-through with
    - NVIDIA driver 261.xx or greater
    - Citrix XenDesktop 5.5 Enterprise/Platnium, XenServer 6 Enterprise / Platinum editions
- NVIDIA Quadro 6000 (Double Wide PCIe-x16 in graphics expansion blade)
  - For ultra high-end 3D graphics, M&E animation and specialized healthcare and oil&gas applications
  - 6GB (GDDR5) memory
  - Supports up to two displays
  - PCe-x16 full height card (one per Graphics Expansion Blade)
  - GPU Pass-through with
    - NVIDIA driver 261.xx or greater
    - Citrix XenDesktop 5.5 Enterprise/Platnium, XenServer 6 Enterprise / Platinum editions
- AMD Firestream FS9350 Compute Accelerator (Single wide PCIe-x16 in graphics expansion blade)
  - General Purpose GPU for high-performance computing and large data center, scale-out deployments
  - 2GB (GDDR5) memory
  - Supports up to two displays
  - PCe-x16 full height card (two per Graphics Expansion Blade)
  - GPU Pass-through not supported on this device
- NVIDIA Tesla M2070Q (Double wide PCIe-x16 in graphics expansion blade)
  - General Purpose GPU for high performance computing, advanced and remote visualization in a datacenter.
  - 6GB (GDDR5) memory
  - Supports up to two displays
  - PCe-x16 full height card (one per Graphics Expansion Blade)
  - GPU Pass-through not supported on this device.
- Single, unified driver compatible with FX 880M, FX 2800M, Quadro 4000, Quadro 5000, Quadro 6000 and Tesla M2070Q.
- Now supporting configuration to simultaneously run a mezzanine option card in Workstation Blade and a PCI express single slot graphics card in the Graphics Expansion Blade.
- Workstation Blade Graphics Software Environment (when combined with HP t610 Thin Client and HP Remote Graphics Software as access client system)
  - Quad-display capable on remote access client system
  - Displays may be oriented in landscape or portrait mode. May also be tiled in matrices
  - Resolution: Max width 7680 pixels (@7680x1200), max height 7680 pixels (@1200x7680)

- **Ports**:
  - One (1) internal USB 2.0 connector for security key devices and USB drive keys
  - One (1) internal SD-HC Card slot

Overview

- **Form Factor**:
  - HP ProLiant WS460c G6 and WS460c G6 Graphics Expansion Blade are both half-height server blades that plugs into the HP BladeSystem c3000 and c7000 enclosures
- **Infrastructure Management**:
  - Convenient slide-out Systems Insight Display for quick and easy front view server diagnostics, along with status LEDs, Automatic Server Recovery (ASR), ROM Based Setup Utility (RBSU)
  - HP Integrated Light-Out 2 (iLO 2) management processor for simplified server setup, health monitoring and recovery, power and thermal control, and lights-out remote administration
  - HP Insight Control suites, as product options, deliver essential infrastructure management that can help save time and money by making it easy to deploy, monitor, control and optimize your IT infrastructure through a single, simple management console.
  - Supports following: (Not preinstalled or preloaded)
    - Server Operating System:
      - Microsoft® Windows Server 2008 R2 SP1 (64-bit) Standard, Enterprise and DataCenter editions
      - Citrix XenServer 6 Enterprise and Platinum editions
    - Client Operating Systems:
      - Genuine Microsoft® Windows 7.0® Business and Enterprise (32-bit and 64-bit)
      - Genuine Microsoft® Windows Vista® Business (32-bit and 64-bit)
      - Genuine Microsoft® Windows® XP Professional 32-bit SP3
      - Genuine Microsoft® Windows® XP Professional x64 Edition with SP2
      - RedHat Enterprise Linux version 4.8 or 5.3 (64-bit)
- **Enclosures**:
  - HP offers two different c-Class workstation blade enclosures to meet your individual needs:
    - The HP BladeSystem c7000 rack enclosure is 10U high and holds up to sixteen (16) ProLiant WS460c G6 workstations plugged vertically or (8) HP ProLiant WS460c G6 Workstation Blades paired with (8) HP WS460c G6 Graphics Expansion Blades plugged vertically.
    - The HP BladeSystem c3000 rack enclosure is 6U high and holds up to eight (8) HP ProLiant WS460c G6 workstations plugged horizontally or (4) HP ProLiant WS460c G6 Workstation Blades paired with (4) HP WS460c G6 Graphics Expansion Blades plugged horizontally.
  - Workstation blades, server blades, storage blades, interconnect modules, power supplies, fans, and redundant Onboard Administrator modules are all designed to fit into the c3000 and c7000 enclosures.
  - For additional enclosure information, please see: http://h18004.www1.hp.com/products/blades/components/enclosures/c-class/index.html.
- **HP Workstation Blade Solution**:
  - The HP ProLiant WS460c G6 Workstation Blade and the HP WS460c G6 Graphics Expansion Blade are two components of the several key components for the HP Workstation Blade Solution. For additional information, please see: http://h20338.www2.hp.com/enterprise/cache/437050-0-0-225-121.html
- **Warranty**:
  - This product is covered by a global limited warranty and supported by HP Services and a worldwide network of HP Authorized Channel Partners. Hardware diagnostic support and repair is available for three years from date of purchase. Support for software and initial setup is available for 90 days from date of purchase. Enhancements to warranty services are available through HP Care Pack services or customized service agreements. Certain restrictions and exclusions apply. Hard drives have either a one year or three year warranty; refer to the specific hard drive QuickSpecs for details.
    NOTE: Server/Workstation warranty includes 3 year Parts, 3 year Labor, 3-year on-site support. Warranty repairs may be accomplished through the use of Customer Self Repair (CSR) parts. These parts fall into two categories: 1) Mandatory CSR parts are designed for easy replacement. A travel and labor charge will result when customers decline to replace a Mandatory CSR part; 2) Optional CSR parts are also designed for easy replacement but may involve added complexity. Customers may choose to have HP replace Optional CSR parts at no charge. Additional information regarding worldwide limited warranty and technical support is available at:
    http://h18004.www1.hp.com/products/servers/platforms/warranty/index.html

Standard Features

NOTE: For the Standard Features shipped in the "Factory Integrated Models", please see the "Configuration Information - Factory Integrated Models" section.

Processor One of the following depending on Model	**Six-Core Processors** Intel® Xeon® X5675 (3.06GHz/6-core/12MB/95W, DDR3-1333, HT, Turbo 2/2/2/2/3/3) Processor Intel® Xeon® E5649 (2.53GHz/6-core/12MB/80W, DDR3-1333, HT, Turbo 1/1/1/1/2/2) Processor Intel® Xeon® E5645 (2.40GHz/6-core/12MB/80W, DDR3-1333, HT, Turbo 1/1/1/1/2/2) Processor **Quad-Core Processors** Intel® Xeon® E5630 (2.53GHz/4-core/12MB/80W, DDR3-1066, HT, Turbo 1/1/2/2) Processor Intel® Xeon® E5620 (2.40GHz/4-core/12MB/80W, DDR3-1066, HT, Turbo 1/1/2/2) Processor **NOTE:** HT indicates that the processor model supports Intel® Hyper-Threading Technology. **NOTE:** Turbo indicates the maximum potential frequency increment when using Intel® Turbo Boost Technology, with 4, 3, 2, and 1 cores active. **NOTE:** DDR3 speed is the maximum memory speed of the processor. Actual memory speed may depend on the quantity and type of DIMMs installed. **NOTE:** For the Intel 5600 Series, the letter preceding the model number indicates the performance/wattage of the processor. "X" denotes High Performance/Wattage; "E" denotes Enterprise Performance/Wattage (Mainstream); and "L" denotes Lower Wattage.
Upgradeability	Upgradeable to two (2) processors
Cache Memory One of the following depending on Model	4MB shared L3 cache 8MB shared L3 cache 12MB shared L3 cache
Chipset	Intel® 5500 Chipset

Memory	Type	DDR3 Registered (RDIMM) or Unbuffered (UDIMM)
	Standard	2GB (2 x 1GB) UDIMM
		4GB (4 x 1GB) UDIMM
	Maximum (RDIMM)	192GB (12 x 16 GB) for Registered Memory configurations
	Maximum (UDIMM)	48 GB (12 x 4 GB) for Unbuffered Memory configurations

NOTE: Depending on the memory configuration and processor model the memory speed may run at 1333MHz, 1066MHz or 800MHz. Please see the Online Memory Configuration Tool for details: www.hp.com/go/ddr3memory-configurator

DDR3 memory options part number decoder

Standard Features

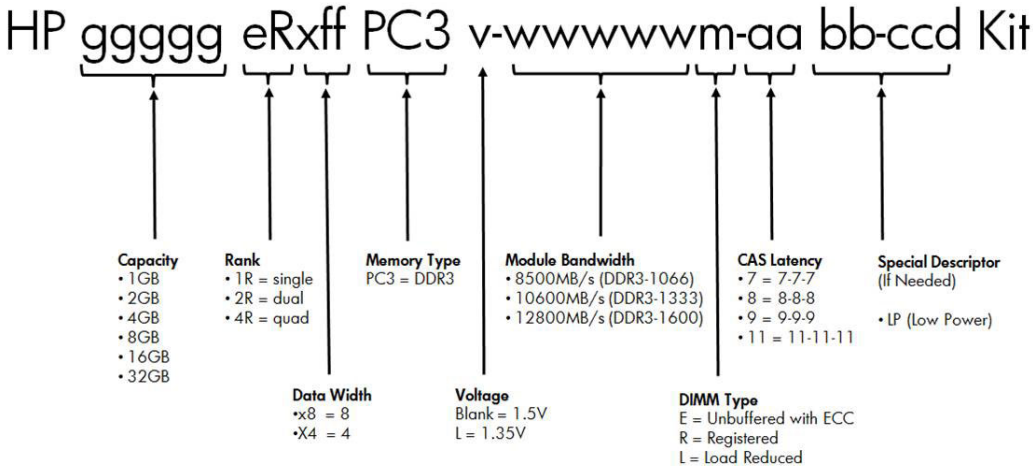

Network Controller	Embedded NC532i Dual Port Flex-10 10GbE Multifunction Server Adapter One (1) additional 10/100 NIC dedicated to iLO 2 Management
I/O Expansion Slots	Two (2) I/O expansion mezzanine slots (x8 PCI Express) Gen 2

Graphics Adapter (mezzanine card) One of the following depending on Model

NVIDIA Quadro FX 2800M graphics Generation 2 (via graphics mezzanine card)

NOTE: Workstation class performance for professional 2D graphics, mid/mid 3D graphics. Supported on HP ProLiant WS460c G6 only. Not compatible and supported with HP ProLiant BL server blades.

Memory size/type	1GB / DDR3
Memory interface	256-bit
Cuda Cores	96
Number of displays	Up to two displays per FX2800M 1GB card. May only be configured with one card.
Graphics driver	Single, unified driver compatible with FX 880M, FX 2800M, Quadro 4000 , Quadro 5000 Quadro 6000 and Tesla M2070Q.

Ultra - High End PCI Express Adapters For WS460c Graphics Expansion Blade Only

NVIDIA Quadro 4000 graphics (Single wide PCIe-x16 in graphics expansion blade)

NOTE: Workstation class performance for professional 3D graphics. Supported on HP WS460c G6 Graphics Expansion Blade only. Not compatible and supported with HP ProLiant BL server blades.

Memory size/type	2GB/ GDDR5
Memory interface	256-bit
Cuda Cores	256
Graphics driver	Single, unified driver compatible with FX 880M, FX 2800M, Quadro 4000, Quadro 5000 Quadro 6000 and Tesla M2070Q.

Standard Features

NVIDIA Quadro 5000 graphics (via PCI express graphics card)

NOTE: Workstation class performance for ultra high end professional 3D graphics. Supported on HP WS460c G6 Graphics Expansion Blade only. Not compatible and supported with HP ProLiant BL server blades.

Memory size/type	2.5 GB GDDR5
Memory interface	320-bit
Cuda Cores	352
Graphics driver	New driver for Quadro 5000

- Insertion of (1) PCIe graphic cards provides x16;
- Insertion of (2) PCIe graphic cards provides x8

NVIDIA Quadro 6000 graphics (via PCI express graphics card)

NOTE: Workstation class performance for ultra high end professional 3D graphics. Supported on HP WS460c G6 Graphics Expansion Blade only. Not compatible and supported with HP ProLiant BL server blades.

Memory size/type	6.0 GB GDDR5
Memory interface	384-bit
Cuda Cores	448
Graphics driver	Unified driver for Quadro 5000 and Quadro 6000

- Insertion of (1) PCIe graphic cards provides x16;
- Insertion of (2) PCie graphic cards provides x8

NVIDIA Tesla M2070Q 6GB Module (Double wide PCIe-x16 in graphics expansion blade)

NOTE: General Purpose GPU for high performance computing, advanced and remote visualization in a datacenter. Supported on HP WS460c G6 Graphics Expansion Blade only. Not compatible and supported with HP ProLiant BL server blades.

Memory size/type	6GB GDDR5
Memory interface	384-bit
Cuda Cores	448

AMD Firestream FS9350 Compute Accelerator (Single wide PCIe-x16 in graphics expansion blade)

NOTE: General Purpose GPU for high-performance computing and large data center, scale-out deployments. Supported on HP WS460c G6 Graphics Expansion Blade only. Not compatible and supported with HP ProLiant BL server blades.

Memory size/type	2 GB GDDR5
Stream Cores	1440

Integrated Manageability HP Integrated Lights-Out 2 (iLO 2) management processor

Standard Features

Storage Controller

Type: HP Smart Array P410i Controller (RAID 0/1)

Available Options: 256MB cache, Battery-Backed Write Cache (BBWC) module for 256MB cache, 512MB cache with Battery Backed Write Cache (BBWC).

NOTE: 3Gb (6Gb Capable) SAS / 1.5Gb (3Gb Capable) SATA.

NOTE: Supports two (2) Small Form Factor (SFF) Hot Plug drive bays.

NOTE: HP Smart Array Advanced Pack not supported on WS460c G6.

Maximum Internal Storage

Hot Plug SAS	2TB	2 x 1TB Serial SCSI
Hot Plug SATA	2TB	2 x 1TB SATA
Hot Plug SATA SSD	800GB	2 x 400GB SATA SSD
Hot Plug SAS SSD	1.6TB	2 x 800GB SAS SSD

Graphics

Integrated ATI RN-50, 32 MB video memory (On-board)

Resolution Color Depths	1600 x 1200, 64K, 256, 16
	1280 x 1024, 16.7M, 64k, 256, 16
	1024 x 768, 16.7M, 64k, 256,16
	800 x 600, 16.7M, 64k, 256, 16
	640 x 480, 16.7M, 64k, 256, 16

NOTE: Maximum resolution available via HP Integrated Lights-Out 2 (iLO 2) remote console is 1280 x 1024.

NOTE: On-board graphics.

Fibre Channel Support

Two (2) optional Fibre Channel HBAs are supported by the HP ProLiant WS460c G6. Both mezzanine circuit boards connect directly to the server blade system board. These Fibre Channel HBAs are available via option kits and must be ordered separately.

HBA mezzanine card option kits:

Emulex LPe1105 FC Dual Channel 4Gb, PCI-E-to-Fibre Channel Host Bus Adapter (PN 403621-B21)

- Based on the same field-proven ASIC, firmware, and driver technology as Emulex's renowned LPe1150 HBA, the Emulex LPe1105-HP is fully driver compatible with all Emulex HBAs

QLogic QMH2462 4Gb FC HBA for HP c-Class BladeSystem (PN 403619-B21)

- Uses common drivers which means that customers can standardize on one QLogic driver whether they are using the QMH2462 or other HBAs powered by QLogic

Emulex and QLogic Fibre Channel HBAs for HP BladeSystem c-Class feature:

- Optimal performance utilizing PCI Express
- 4/2/1Gb/s auto negotiating speeds (4Gb HBAs)
- Dual-ports for redundant path connections
- Optimized for HP Storage and supported by third party SAN vendors
- Support for the following operating system environments
- Genuine Microsoft® Windows 7.0® Business (32-bit and 64-bit)
- Genuine Microsoft® Windows Vista® Business (32-bit and 64-bit1)

Standard Features

- Genuine Microsoft® Windows® XP Professional (32-bit with SP32 and 64-bit with SP21)
- RedHat Enterprise Linux version 4.8 or 5.3 (64-bit)
- Microsoft® Windows Server 2008 R2 SP1 (64-bit)

NOTE: For Genuine Microsoft® Windows Vista® Business (32-bit and 64-bit) drivers please visit ProLiant Support Pack at: http://h20000.www2.hp.com/bizsupport/TechSupport/SoftwareDescription.jsp?lang=en&cc=US&swItem=MTX-aa7e24c055c643529cf479863b&prodTypeId=18964&prodSeriesId=3716246
NOTE: For Genuine Microsoft® Windows® XP Professional (64-bit with SP2) drivers please visit ProLiant Support Pack at: http://h20000.www2.hp.com/bizsupport/TechSupport/SoftwareDescription.jsp?lang=en&cc=US&swItem=MTX-aa7e24c055c643529cf479863b&prodTypeId=18964&prodSeriesId=3716246
NOTE: For Genuine Microsoft® Windows® XP Professional (32-bit with SP3) drivers please visit Emulex / Qlogic website at: http://www.emulex.com/downloads/hp.html and Qlogic: http://driverdownloads.qlogic.com/QLogicDriverDownloads_UI/Product_detail_New.aspx?oemid=21&companyid=4

Compatible SAN

HP ProLiant WS460c G6 workstation blades are optimized for HP Storage MSA, EVA and XP.

HP ProLiant 460c G6 server blades are compatible with select 3rd party SANs (please see blade storage page for more details: http://h18000.www1.hp.com/products/servers/proliant-bl/c-class/storage.html
NOTE: HP ProLiant WS460c G6 does not support boot from SAN.

HP Virtual Connect

HP Virtual Connect in an interconnect option for BladeSystem c-Class that simplifies server connectivity to data and storage networks, and reduces costs. Unique HP Flex-10 and FlexFabric technologies make maximum use of network bandwidths, provide dynamic tuning and enable extreme flexibility to meet individual server and infrastructure requirements. HP Virtual Connect Enterprise Manager (VCEM) provides a central console to administer network connections and workloads for thousands of servers. For more information on Virtual Connect Ethernet, Fibre Channel, Converged Network and management options see: www.hp.com/go/virtualconnect

HP Insight management software

HP Integrated Lights-Out 2 (iLO 2)	HP Integrated Lights-Out (iLO) simplifies server setup, health monitoring, power and thermal control, and lights-out remote administration of ProLiant ML, DL, BL servers and Workstation Blades. HP iLO functions without additional software and can be accessed from any location via a web browser. HP iLO unleashes the power of the ProLiant platform and delivers the highest possible quality of IT service to the business. For more information, visit: www.hp.com/go/iLO
HP Insight Control	HP Insight Control, a product option, delivers essential infrastructure management that can help save time and money by making it easy to deploy, migrate, monitor, remote control, and optimize your IT infrastructure through a single, simple management console. For more information, see http://www.hp.com/go/insightcontrol. HP Insight Control includes one year of 24 x 7 HP Software Technical Support and Update Service ensuring rapid access to HP support staff and proactive delivery of software updates. For more information about this service, please visit: http://www.hp.com/services/insight.

Standard Features

High Performance Clusters	HP Cluster Platforms	HP Cluster Platforms are specifically engineered, factory-integrated large-scale ProLiant clusters optimized for High Performance Computing, with a choice of servers, networks and software. Operating system options include specially priced offerings for Red Hat Enterprise Linux and SUSE Linux Enterprise Server, as well as Microsoft Windows HPC Server. A Cluster Platform Configurator simplifies ordering. http://www.hp.com/go/clusters
	HP HPC Interconnects	High Performance Computing (HPC) interconnect technologies are available for this server as part of the HP Cluster Platform portfolio. These high-speed InfiniBand and Gigabit interconnects are fully supported by HP when integrated within an HP cluster. Flexible, validated solutions can be defined with the help of configuration tools. http://www.hp.com/techservers/clusters/ucp/index.html
	HP Insight Cluster Management Utility	HP Insight Cluster Management Utility (CMU) is an HP-licensed and HP-supported suite of tools that are used for lifecycle management of hyperscale clusters of Linux ProLiant systems. CMU includes software for the centralized provisioning, management and monitoring of nodes. CMU makes the administration of clusters user friendly, efficient, and effective. http://www.hp.com/go/cmu
	HP HPC Linux Value Pack	HP HPC Linux Value Pack (Value Pack) is an HP-licensed and HP-supported option to HP Insight CMU, for the development and deployment of applications on HPC Cluster Platforms. Value Pack includes the Platform LSF workload scheduler and Platform Application Center, as well as the HP-MPI parallelization library. HP HPC Linux Value Pack

Operating Systems Support for HP ProLiant Workstations

Server Operating System:
Microsoft® Windows Server 2008 R2 SP1 (64-bit) Standard, Enterprise and DataCenter editions
Citrix XenServer 6 Enterprise and Platinum editions

Client Operating Systems:
Genuine Microsoft® Windows 7.0® Business (32-bit and 64-bit)
Microsoft Windows Vista Business SP2 (32-bit & 64-bit)
Microsoft Windows XP Professional SP3 (32-bit)
Microsoft Windows XP Professional x64 edition with SP2
Red Hat Enterprise Linux (RHEL) 4.8 and 5.3 (64-bit only)

Availability

- Dual-Port Fibre Channel Mezzanine Card options for redundant SAN connection
- Two (2) hot-plug SAS hard drive bays and integrated RAID (HP Smart Array P410i Controller)
- Optional Battery-backed write cache module for integrated RAID controller
- Redundant ROM
- Advanced ECC Memory

Industry Standard Compliance

- PCI 2.2 Compliant
- WOL Support
- SB 2.0 Support

Standard Features

Security

- Power-on password
- Administrator's password
- Integrated Lights-Out 2 has 12 customizable user accounts and SSL encryption
- Integrated Lights-Out 2 can be disabled via a Global Setting

---

Factory Express Portfolio for Servers and Storage

HP Factory Express offers configuration, customization, integration and deployment services for HP servers and storage products. Customers can choose how their factory solutions are built, tested, integrated, shipped and deployed.

Factory Express offers service packages for simple configuration, racking, installation, complex configuration and design services as well as individual factory services, such as image loading, asset tagging, and custom packaging. HP products supported through Factory Express include a wide array of servers and storage: HP Integrity, HP ProLiant, HP ProLiant Server Blades, HP BladeSystem, HP 9000 servers as well as the MSAxxxx, VA7xxx, EVA, XP, rackable tape libraries and configurable network switches.

For more information on Factory Express services on your specific server model please contact your sales representative or go to: http://www.hp.com/go/factory-express.

HP Simple Configurator

SCE is a guided self service tool to help sales and non technical people provide customers with initial configurations in 3 to 5 minutes. You may then send the configuration on for configuration help, or use in your existing ordering processes. If you require "custom" rack configuration or configuration for products not available in SCE, please contact HP's Customer Business Center or an Authorized Partner for assistance. http://www.hp.com/products/configurator

Service and Support

Service and Support

HP Technology Services for Industry Standard Servers and BladeSystem
Capitalizing on HP ProLiant server and HP BladeSystem capabilities requires a service partner who understands your increasingly complex business technology environment. That's why it makes sense to team up with the people who know HP infrastructure hardware and software best - the experienced professionals at HP Services.

Protect your business beyond warranty with HP Care Pack Services
HP Care Pack services offer complete care and support expertise with committed response choices designed to meet your IT and business needs.

HP Foundation Care services offer scalable reactive support-packages for HP industry-standard servers and software. You can choose the type and level of service that is most suitable for your IT and business needs. HP Proactive Care delivers high levels of system availability through proactive service management and advanced technical response.

Recommended HP Care Pack Services for your HP product

Optimized Care

3-Year HP 6 hour Call to Repair Response, Proactive Care
Combined reactive and proactive support for hardware and software helping optimize your systems and delivering high levels of availability through proactive service management and advanced technical response. Hardware problem resolution to return the hardware in operating condition within 6 hours of the initial service request. A Technical Account Manager, as your single point of contact, will own your call or issue end to end until resolved.
http://h20195.www2.hp.com/v2/GetPDF.aspx/4AA3-8855EEE.pdf

HP Install c-Class Server Blade Service
This easy-to-buy, easy-to-use HP Care Pack service helps ensure that your new HP hardware is installed smoothly, efficiently, and with minimal disruption of your IT and business operations.

Standard Care

3-Year HP 24x7 4 hour response, Proactive Care Service
This service gives you combined reactive and proactive support including rapid access to our Advanced Solution Center to manage and prevent problems and a Technical Support Specialist with a broad level of technical knowledge that will engage with additional technical expertise as needed from HP's vast global resources.
http://h20195.www2.hp.com/v2/GetPDF.aspx/4AA3-8855EEE.pdf

HP Install c-Class Server Blade Service
This easy-to-buy, easy-to-use HP Care Pack service helps ensure that your new HP hardware is installed smoothly, efficiently, and with minimal disruption of your IT and business operations

Service and Support

Related Services

HP Proactive Care Personalized Support - Environmental Option
The Personalized Support option provides an assigned Account Support Manager who can bring best practices from across the industry plus extra technical skills to your IT team. This option is only available as an add-on to HP Proactive Care Support.

HP Proactive Select Service
Provides a flexible way to purchase HP best-in-class consultancy and technical services. You can buy Proactive Select Service Credits when you purchase your hardware and then use the credits over the next 12 months. http://h20195.www2.hp.com/V2/GetPDF.aspx/4AA2-3842ENN.pdf

Additional HP Care Pack services can be found at:
http://www.hp.com/go/cpc

Insight Online/Insight Remote Support

HP Insight Remote Support provides 24 X 7 remote monitoring, proactive notifications, and problem resolution. This comes at no additional cost with your HP solution. Learn more about Insight Remote Support http://www.hp.com/go/insightremotesupport and Insight Online http://www.hp.com/go/insightonline

NOTE: Insight Remote Support is a prerequisite for Proactive Care. All blades within a single HP BladeSystem enclosure must be at the same service level.

HP Support Center

Personalized online support portal with access to information, tools and experts to support HP business products. Submit support cases online, chat with HP experts, access support resources or collaborate with peers. Learn more http://www.hp.com/go/hpsc

HP's Support Center Mobile App allows you to resolve issues yourself or quickly connect to an agent for live support. Now, you can get access to personalized IT support anywhere, anytime.
HP Insight Remote Support and HP Support Center are available at no additional cost with a HP warranty, HP Care Pack or HP contractual support agreement.

NOTE: HP Support Center Mobile App is subject to local availability.

Parts and Materials

HP will provide HP-supported replacement parts and materials necessary to maintain the covered hardware product in operating condition, including parts and materials for available and recommended engineering improvements.

Parts and components that have reached their maximum supported lifetime and/or the maximum usage limitations as set forth in the manufacturer's operating manual, product quick-specs, or the technical product data sheet will not be provided, repaired, or replaced as part of these services.

The defective media retention service feature option applies only to Disk or eligible SSD/Flash Drives replaced by HP due to malfunction.

For more information

To learn more on HP ProLiant servers and HP BladeSystem servers, please contact your HP sales representative or HP Authorized ServiceOne Channel Partner. Or visit: www.hp.com/services/bladesystem

Models

NOTE: For the Standard Features shipped in the "Factory Integrated Models", please see the "Configuration Information - Factory Integrated Models" section.
NOTE: Not all models are available in all regions. Check with your local country HP offices for availability.
NOTE: Pre-configured models ship with the configurations below. Options can be selected from the Core or Additional options section of this QuickSpecs.
NOTE: HP does not allow factory integration of options into pre-configured models. Any additional options purchased will be shipped separately.
NOTE: If you desire a custom configuration please see "Configuration Information - Factory Integrated Models" section of this QuickSpecs.

FX 2800M graphics preconfigured model

HP ProLiant WS460c G6 E5640 1P 4GB-R Single FX2800M Workstation
632291-B21

Processor(s)	(1) Intel® Xeon® E5640 (2.66GHz/4-core/12MB//80W, DDR3-1066, HT, Turbo 1/1/2/2) Processor
Cache Memory	12MB and 8MB shared L3 cache
Memory	4GB (2 x 2 GB) PC3-10600 (DDR3-1333) Registered DIMMs (RDIMMs)
Graphics Adapter	(1) NVIDIA Quadro FX 2800M with 1GB memory
Network Adapter	Embedded NC532i Dual Port Flex-10 10GbE Multifunction Server Adapter and one (1) additional 10/100 server adapter dedicated to iLO 2 management
Storage Controller	Integrated HP Smart Array P410i Controller **NOTE:** Optional 256MB or 512MB Battery-Backed Write Cache available. Please see the Storage Controllers section listed in Additional Options section of this QuickSpecs
Hard Drives	None ship standard **NOTE:** Client operating systems require local hard disk drives. Order desired capacity/performance drives separately.
Internal Storage	SAS: 2TB (2 x 1TB SAS) - Maximum SATA: 2TB (2 x 1TB SATA) - Maximum
Optical Drive	None
Operating System	None **NOTE:** Client OS license and software not included.
Form Factor	Up to eight (8) half-height blades supported in the HP BladeSystem c3000 Enclosure Up to sixteen (16) half-height blades supported in HP BladeSystem c7000 Enclosure

Configuration Information - Factory Integrated Models

NOTE: This section lists some of the steps required to configure a Factory Integrated Model. To ensure only valid configurations are ordered, HP recommends the use of an HP approved configurator. Contact your local sales representative for information on CTO product offerings and requirements.
NOTE: Configure-to-order (CTO) servers must start with a CTO Chassis.
NOTE: HP does not allow factory integration of options into standard models listed above. Configure-to-order server blades must start with a CTO Blade.
NOTE: FIO indicates that this option is only available as a Factory Installable Option.

Step 1: Base Server Blade Configuration (Select a configurable Blade)

HP Models	HP ProLiant WS460c G6 Configure-to-order Blade	580139-B21
	NOTE: Single-width, half-height bade with two mezzanine card slots available.	
	HP WS460c G6 Graphics Expansion Configure-to-order Blade	594935-B21
	NOTE: Double-width half-height blade with two, full-length, PCIe x8 slots. No mezzanine card slots on base blade are currently available.	
	Configurable Model ships with:	
	Integrated NC532i Dual Port Flex-10 10GbE Multifunction Server Adapter, Integrated HP Smart Array P410i Controller (RAID 0/1) (1) additional 10/100 server adapter dedicated to iLO 2 management with Integrated Lights-Out 2 Standard Blade Edition	

Step 2: Choose Required Options (one of the following from each list unless otherwise noted)

HP Processors	**NOTE:** HP ProLiant WS460c G6 shares same processor modules with BL460c G6 server. If two processors are desired, select one xxxxxx-L21 and one xxxxxx-B21.	
	Six-Core Processor Option Kits	
	HP BL460c G7 Intel® Xeon® X5675 (3.06GHz/6-core/12MB/95W) FIO Processor Kit	637406-L21
	HP BL460c G7 Intel® Xeon® E5649 (2.53GHz/6-core/12MB/80W) FIO Processor Kit	637410-L21
	HP BL460c G7 Intel® Xeon® E5645 (2.40GHz/6-core/12MB/80W) FIO Processor Kit	637412-L21
	Quad-Core Processor Option Kits	
	HP BL460c G6 Intel® Xeon® E5640 (2.66GHz/4-core/12MB/80W) FIO Processor Kit	595729-L21
	HP WS460c G6 Intel® Xeon® E5630 (2.53GHz/4-core/12MB/80W) FIO Processor Kit	601459-L21
	HP WS460c G6 Intel® Xeon® E5620 (2.40GHz/4-core/12MB/80W) FIO Processor Kit	603589-L21
HP Memory	**Registered DIMMS (RDIMMs)**	
	HP 2GB (1x2GB) Dual Rank x8 PC3-10600 (DDR3-1333) Registered CAS-9 Memory Kit	500656-B21
	HP 4GB (1x4GB) Dual Rank x4 PC3-10600 (DDR3-1333) Registered CAS-9 Memory Kit	500658-B21
	HP 4GB (1x4GB) Single Rank x4 PC3-10600 (DDR3-1333) Registered CAS-9 Memory Kit	593339-B21
	HP 4GB (1x4GB) Single Rank x4 PC3L-10600 (DDR3-1333) Registered CAS-9 Low Power Memory Kit	604504-B21
	HP 8GB (1x8GB) Dual Rank x4 PC3-10600 (DDR3-1333) Registered CAS-9 Memory Kit	500662-B21
	HP 8GB (1x8GB) Dual Rank x4 PC3L-10600 (DDR3-1333) Registered CAS-9 Low Power Memory Kit	604506-B21
	HP 16GB (1x16GB) Quad Rank x4 PC3-8500 (DDR3-1066) Registered CAS-7 Memory Kit	500666-B21
	Unbuffered with ECC DIMMs (UDIMMs)	

HP 1GB (1x1GB) Single Rank x8 PC3-10600 (DDR3-1333) Unbuffered CAS-9 Memory Kit	500668-B21
HP 2GB (1x2GB) Dual Rank x8 PC3-10600 (DDR3-1333) Unbuffered CAS-9 Memory Kit	500670-B21
HP 4GB (1x4GB) Dual Rank x8 PC3-10600 (DDR3-1333) Unbuffered CAS-9 Memory Kit	500672-B21

NOTE: All DDR3 memory option kits consist of one DIMM per kit. For detailed memory configuration rules and guidelines, please use the Online DDR3 Memory Configuration Tool: www.hp.com/go/ddr3memory-configurator.

NOTE: Kits described as LP include Low Power DIMMs. For more information on ProLiant Energy Efficient Features, see: www.hp.com/go/proliant-energy-efficient.

Step 3: Choose Additional Factory Integratable Options (one of the following from each list unless otherwise noted)

HP Graphics Options

NOTE: Choose from following graphics mezzanine cards for use with the single-width HP ProLiant WS460c G6 model (P/N 580139-B21).

NVIDIA Quadro FX2800M (1G) Mezz Graphics Single Card FIO Kit	594936-B21

NOTE: Single card kit can support up to two displays as dual-display configuration on the access client using HP Remote Graphics Software.

NOTE: Dual card kit can support up to four displays as quad-display configuration on the access client using HP Remote Graphics Software.

NOTE: Choose following standard PCIe graphics card for use with the double-width HP ProLiant WS460c model (P/N 594935-B21).

NVIDIA Quadro 4000 2GB PCI-E Adapter	655933-B21
NVIDIA Quadro 5000 2.5GB PCI-E Adapter	655934-B21
NVIDIA Quadro 6000 6GB PCI-E Adapter	655935-B21
NVIDIA Tesla M2070Q 6GB GPU Graphics Module	A0C39A

Step 4: Choose Additional Options for Factory Integration

NOTE: For additional options, please refer to the "Core Options" and "Additional Options" section below. For additional options, including server blade enclosures interconnect and mezzanine options and power subsystem options; please see the Core Options and Additional sections below; or the following:
HP BladeSystem c3000 Enclosure QuickSpecs:
http://h18000.www1.hp.com/products/quickspecs/12790_div/12790_div.html
HP BladeSystem c7000 Enclosure QuickSpecs:
http://h18000.www1.hp.com/products/quickspecs/12810_div/12810_div.html
and HP BladeSystem c-Class Interconnect and Mezzanine Components: http://h18004.www1.hp.com/products/blades/components/c-class-interconnects.html
http://h18004.www1.hp.com/products/blades/components/c-class-adapters.html.

Core Options

NOTE: Some options may not be integrated at the factory. To ensure only valid configurations are ordered, HP recommends the use of an HP approved configurator. Contact your local sales representative for additional information.
NOTE: For additional options, please refer to the "Core Options" and "Additional Options" sections below.

HP Fiber Channel Mezzanine Options	Emulex LPe1105 4Gb Fibre Channel Host Bus Adapter for c-Class BladeSystem	403621-B21
	QLogic QMH2462 4Gb Fibre Channel Host Bus Adapter for c-Class BladeSystem	403619-B21
	NOTE: Boot from SAN functionality not supported.	
HP Processors	**Six-Core Process Option Kits**	
	HP BL460c G7 Intel® Xeon® X5675 (3.06GHz/6-core/12MB/95W) Processor Kit	637406-B21
	HP BL460c G7 Intel® Xeon® E5649 (2.53GHz/6-core/12MB/80W) Processor Kit	637410-B21
	HP BL460c G7 Intel® Xeon® E5645 (2.40GHz/6-core/12MB/80W) Processor Kit	637412-B21
	Quad-Core Process Option Kits	
	HP BL460c G6 Intel® Xeon® E5640 (2.66GHz/4-core/12MB/80W) Processor Kit	595729-B21
	HP WS460c G6 Intel® Xeon® E5630 (2.53GHz/4-core/12MB/80W) Processor Kit	601459-B21
	HP WS460c G6 Intel® Xeon® E5620 (2.40GHz/4-core/12MB/80W) Processor Kit	603589-B21
HP Memory	**Registered DIMMS (RDIMMs)**	
	HP 2GB (1x2GB) Dual Rank x8 PC3-10600 (DDR3-1333) Registered CAS-9 Memory Kit	500656-B21
	HP 4GB (1x4GB) Dual Rank x4 PC3-10600 (DDR3-1333) Registered CAS-9 Memory Kit	500658-B21
	HP 4GB (1x4GB) Single Rank x4 PC3-10600 (DDR3-1333) Registered CAS-9 Memory Kit	593339-B21
	HP 4GB (1x4GB) Single Rank x4 PC3L-10600 (DDR3-1333) Registered CAS-9 Low Power Memory Kit	604504-B21
	HP 8GB (1x8GB) Dual Rank x4 PC3-10600 (DDR3-1333) Registered CAS-9 Memory Kit	500662-B21
	HP 8GB (1x8GB) Dual Rank x4 PC3L-10600 (DDR3-1333) Registered CAS-9 Low Power Memory Kit	604506-B21
	HP 16GB (1x16GB) Quad Rank x4 PC3-8500 (DDR3-1066) Registered CAS-7 Memory Kit	500666-B21
	Unbuffered with ECC DIMMs (UDIMMs)	
	HP 1GB (1x1GB) Single Rank x8 PC3-10600 (DDR3-1333) Unbuffered CAS-9 Memory Kit	500668-B21
	HP 2GB (1x2GB) Dual Rank x8 PC3-10600 (DDR3-1333) Unbuffered CAS-9 Memory Kit	500670-B21
	HP 4GB (1x4GB) Dual Rank x8 PC3-10600 (DDR3-1333) Unbuffered CAS-9 Memory Kit	500672-B21
	NOTE: All DDR3 memory option kits consist of one DIMM per kit. For detailed memory configuration rules and guidelines, please use the Online DDR3 Memory Configuration Tool: www.hp.com/go/ddr3memory-configurator.	
	NOTE: Kits described as LP include Low Power DIMMs. For more information on ProLiant Energy Efficient Features, see: http://h18004.www1.hp.com/products/servers/platforms/energyefficient/.	

Core Options

HP Hard Drives	**SAS Hot Plug SFF (2.5-inch) Enterprise (ENT) Drives**	
	HP 900GB 6G SAS 10K rpm SFF (2.5-inch) Dual Port Enterprise 3yr Warranty Hard Drive	619291-B21
	HP 600GB 6G SAS 10K rpm SFF (2.5-inch) Dual Port Enterprise 3yr Warranty Hard Drive	581286-B21
	HP 450GB 6G SAS 10K rpm SFF (2.5-inch) Dual Port Enterprise 3yr Warranty Hard Drive	581284-B21
	HP 300GB 6G SAS 15K rpm SFF (2.5-inch) Hot Plug Enterprise 3 yr Warranty Hard Drive	627117-B21
	HP 300GB 6G SAS 10K rpm SFF (2.5-inch) Dual Port Enterprise 3yr Warranty Hard Drive	507127-B21
	HP 146GB 6G SAS 15K rpm SFF (2.5-inch) Dual Port Enterprise 3yr Warranty Hard Drive	512547-B21
	SAS Hot Plug SFF (2.5-inch) Midline (MDL) Drives	
	HP 1TB 6G SAS 7.2K rpm SFF (2.5-inch) Dual Port Midline 1yr Warranty Hard Drive	605835-B21
	HP 500GB 6G SAS 7.2K rpm SFF (2.5-inch) Dual Port Midline 1yr Warranty Hard Drive	507610-B21
	NOTE: Please see QuickSpecs for Technical Specifications and additional information: http://h18000.www1.hp.com/products/quickspecs/12244_div/12244_div.html (Worldwide)	
	6G SAS Hot Plug Enterprise Performance Solid State Drives	
	HP 400GB 6G SAS SLC SFF (2.5-inch) Enterprise Performance 3yr Warranty Solid State Drive	632494-B21
	HP 200GB 6G SAS SLC SFF (2.5-inch) Enterprise Performance 3yr Warranty Solid State Drive	632492-B21
	NOTE: Please see the QuickSpecs for Technical Specifications and additional information: http://h18000.www1.hp.com/products/quickspecs/14038_div/14038_div.html (Worldwide)	
	SATA Hot Plug SFF (2.5-inch) Midline (MDL) Drives	
	HP 1TB 3G SATA 7.2K rpm SFF (2.5-inch) Hot Plug Midline 1yr Warranty Hard Drive	625609-B21
	HP 500GB 3G SATA 7.2K rpm SFF (2.5-inch) Midline 1yr Warranty Hard Drive	507750-B21
	NOTE: Please see QuickSpecs for Technical Specifications and additional information: http://h18000.www1.hp.com/products/quickspecs/13021_div/13021_div.html (Worldwide)	
	SATA Hot Plug 2.5" Enterprise Mainstream Solid State Drives	
	HP 400GB 3G SATA MLC SFF (2.5-inch) Enterprise Mainstream 3yr Warranty Solid State Drive	636597-B21
	HP 200GB 3G SATA MLC SFF (2.5-inch) Enterprise Mainstream 3yr Warranty Solid State Drive	636595-B21
	HP 100GB 3G SATA MLC SFF (2.5-inch) Enterprise Mainstream 3yr Warranty Solid State Drive	636593-B21
	NOTE: Please see QuickSpecs for Technical Specifications and additional information: http://h18000.www1.hp.com/products/quickspecs/13415_div/13415_div.html (Worldwide)	
	NOTE: Hard drives have either a one year or three year warranty; refer to the specific hard drive QuickSpecs for details.	
	NOTE: The hard drive options are not required when configuring a Drive-less Model.	

Additional Options

NOTE: For additional options, please refer to the "Core Options" and "Additional Options" sections below.
NOTE: Some options may not be integrated at the factory. To ensure only valid configurations are ordered, HP recommends the use of an HP approved configurator. Contact your local sales representative for additional information.

HP Insight software	**HP Integrated Lights-Out (iLO) Advanced for ProLiant BladeSystem Remote Management**	
	HP iLO Advanced for BladeSystem including 1yr 24x7 Support Single Server License **NOTE:** Customer will receive a license entitlement certificate, which must be redeemed online or via fax in order to obtain the license activation key(s). Includes one year of 24 x 7 HP Software Technical Support Service. **NOTE:** For additional license kits please see the HP Integrated Lights-Out (iLO) QuickSpecs at: www.hp.com/go/iLO.	512488-B21
High Performance Clusters	HP Insight Cluster Management Utility 1yr 24x7 Flexible License **NOTE:** This part number can be used to purchase one certificate for multiple licenses with a single activation key. Each license is for one node (server). Customer will receive a printed end user license agreement and license entitlement certificate via physical shipment. The license entitlement certificate must be redeemed online in order to obtain a license key. **NOTE:** For additional license kits please see the QuickSpecs at: http://h18004.www1.hp.com/products/quickspecs/12612_div/12612_div.html (Worldwide)	QL803B
	HP Insight Cluster Management Utility 3yr 24x7 Flexible License **NOTE:** These part numbers can be used to purchase one certificate for multiple licenses and support with a single activation key. Each license is for one node (server). Customer will receive a printed end user license agreement and license entitlement certificate via physical shipment. The license entitlement certificate must be redeemed online in order to obtain a license key. Customer also will receive a support agreement.	BD476A
	HP Insight Cluster Management Utility Media **NOTE:** Order a minimum of one license per cluster to purchase media including software and documentation, which will be delivered to the customer, and also licenses CMU management. No license key is delivered or required. **NOTE:** For additional license kits please see the QuickSpecs at: http://h18004.www1.hp.com/products/quickspecs/12612_div/12612_div.html (Worldwide)	BD477A
	HP High Performance Computing Linux Value Pack 1 Processor Flexible License for ProLiant Servers **NOTE:** This part number can be used to purchase one certificate for multiple licenses with a single activation key. Each license is for one socket (a.k.a. processor). Customer will receive a printed end user license agreement and license entitlement certificate via physical shipment. The license entitlement certificate must be redeemed online in order to obtain a license key. **NOTE:** For additional license kits please see the QuickSpecs at: http://h18004.www1.hp.com/products/quickspecs/13485_div/13485_div.html (Worldwide)	TC293B
	HP High Performance Computing Linux Value Pack Media Kit for ProLiant Servers **NOTE:** This part number can be used to purchase media including software and	TC294A

	documentation, which will be delivered to the customer. **NOTE:** For additional license kits please see the QuickSpecs at: http://h18004.www1.hp.com/products/quickspecs/13485_div/13485_div.html (Worldwide)	
HP Remote Access	**HP Remote Graphics Software (RGS) v5.4.0**	
	NOTE: HP RGS is licensed software sold separately. Not bundled with HP WS460c G6. **NOTE:** For remote access to Windows Vista OS on blade, HP RGS version 5.3 or later is required. **NOTE:** For more information on HP Remote Graphics Software, please find HP Remote Graphics in: http://www.hp.com/go/rgs	
	HP RGS Desktop E-LTU/E-Media	AW684AAE
	HP RGS Desktop E-LTU/E-Media	AW684AA
	HP RGS Desktop LTU and CD-ROM Media AW686AA	AW686AA
	HP 1 year 9x5 3 Incidents Remote Graphics Software Technical Support	UE345E
HP Graphic Options	NVIDIA Quadro 4000 2GB PCI-E Adapter	655933-B21
	NVIDIA Quadro 5000 2.5GB PCI-E Adapter	655934-B21
	NVIDIA Quadro 6000 6GB PCI-E Adapter	655935-B21
HP Storage Controller	**Optional Upgrades**	
	HP 256MB P-series Cache Upgrade	462968-B21
	HP 650 mAh P-Series Battery **NOTE:** Requires 256 MB Cache Module.	462969-B21
	HP 1GB Flash Backed Cache	534562-B21
	HP 512MB P-Series Battery Backed Write Cache Upgrade **NOTE:** Highly recommended for optimal performance.	462967-B21
	HP 512MB Flash Backed Write Cache	534916-B21
	NOTE: Please see the QuickSpecs for Technical Specifications and additional information: http://h18000.www1.hp.com/products/quickspecs/13203_div/13203_div.html (Worldwide)	
HP c-Class Mezzanine Options	HP 4X QDR QLogic InfiniBand Dual Port Mezzanine HCA for c-Class BladeSystem	583210-B21
	HP 4X QDR InfiniBand ConnectX-2 Dual Port Mezzanine HCA for c-Class BladeSystem **NOTE:** QDR InfiniBand Mezzanine cards are supported with Redhat Linux Operating System only.	592519-B21
	NOTE: Please see the QuickSpecs for Technical Specifications and additional information: http://h18000.www1.hp.com/products/quickspecs/12586_div/12586_div.html (Worldwide)	

Additional Options

HP Expansion Blade	HP BLc PCI Expansion Blade **NOTE:** Ships with one pre-installed PCI-X connect board. Also includes one PCIe connect board which requires installation. **NOTE:** Please see the QuickSpecs for Technical Specifications and additional information: http://h18000.www1.hp.com/products/quickspecs/12753_div/12753_div.html (Worldwide)	448018-B21
HP USB and SD Options	HP USB 2-Button Optical Scroll Mouse	DC172B
HP Care Pack Services	**Proactive Care** - Collaborative Support plus Proactive services delivered by the on shore/near shore Advanced Solution Center (ASC) and backed by the global delivery organization, end-to-end case ownership from a Technical Solution Specialists and Technical Account Manager who remotely delivers firmware/software revision management, proactive scans and incident trend reports. Recommended for customers running a virtualized infrastructure and/or customers who desire an enhanced call support experience.	
	HP 3 year 4 hour 24x7 ProLiant WS460c Proactive Care Service	U3C18E
	HP 3 year 4 hour 24x7 with Defective Media Retention ProLiant WS460c Proactive Care Service	U3C21E
	HP 3 year 6 hour Call To Repair 24x7 ProLiant WS460c Proactive Care Service	U3C24E
	HP 3 year 6hr Call To Repair 24x7 with Defective Media Retention ProLiant WS460c Proactive Care SVC	U3C27E
	Proactive Care Personalized Support Environmental Option - to add an onsite Account Support Manager (ASM) to Proactive Care. ASM is an assigned resource who delivers support planning and brings technical expertise and best practices advice for the customer's environment.	
	HP 3yr Provides annual personalized proactive supp for existing Proactive Care ISS centric environmt	U6W98E
	Installation Services - reduce the time required to get your system up and running and help minimize disruptions to your business.	
	HP Installation WS460c Workstation Blade Service	UR362E
	HP Installation Non Standard Hours WS460c Workstation Blade Service	UR363E

Memory

NOTE: Memory configurations listed do not apply to "Factory Integrated Models".

Memory Population Guidelines

For detailed memory configuration rules and guidelines, please use the Online DDR3 Memory Configuration Tool: www.hp.com/go/ddr3memory-configurator

Some DIMM installation guidelines are summarized below:

- For the HP ProLiant WS460c G6 server with twelve (12) memory slots:
  - There are three (3) channels per processor; six (6) channels per server
  - There are two (2) DIMM slots for each memory channel; twelve (12) total slots.
  - Memory channel 1 consists of the two (2) DIMMs that are closest to the processor
  - Memory channel 3 consists of the two (2) DIMMs that are furthest from the processor
- DIMM slots that are white should be populated first
- Do not mix Unbuffered memory (UDIMMs) with Registered memory (RDIMMs).
- Do not install DIMMs if the corresponding processor is not installed
- If only one processor is installed in a 2CPU system, only half of the DIMM slots are available
- To maximize performance, balance the total memory capacity between all installed processors
- It is not required, but it is recommended to load the channels similarly if possible
- Populate DIMMs from heaviest load (quad-rank) to lightest load (single-rank) within a channel
- Heaviest load (DIMM with most ranks) within a channel goes furthest from the processor
- For memory mirroring mode, channel 3 must be unpopulated. Channels 1 and 2 are populated identically
- For lock-step mode, channel 3 must be unpopulated. DIMMs in channels 1 and 2 will be installed in pairs. The paired slots will be 1,4; 2,5 on the BL460c G6
- Low Voltage DIMMs can only be used with Intel Xeon 5600 series processors.
- If mixing DIMM voltage is a requirement, please note that the DIMMs will run at 1.5V since all 1.35V are capable of supporting 1.5V operations

NOTES:

- PC3-10600 DIMMs have a maximum speed of 1333MHz. PC3-8500 DIMMs have a maximum speed of 1066MHz.
- Mixing DIMM speeds is allowed, but the system processor speed rules always override the DIMM capabilities
- If you do mix DIMM speeds, the memory bus will default to the minimum clock rate of all DIMMs in the system - even if the slower DIMM is on the other processor
- If you install 1x 1066MHz DIMM in channel 1 and 1x 1333MHz DIMM in channel 2, the maximum speed will be 1066MHz
- If you install 1x 1066MHz DIMM in channel 1 and 5x 1333MHz DIMMs with 1 DIMM Per Channel (DPC) in each of the other channels, the maximum speed will be 1066MHz
- Maximum memory speed will also depend on the processor installed

HP ProLiant WS460c G6 Workstation Blade DIMM slot and configuration diagrams

Basic memory slot and population diagram

- Population order; start with "A" first, "B" second, "C" third, etc.

Memory

12 DIMM SLOTS (6 per CPU node)					
	CPU1		CPU2		
	slot #	population order	slot #	population order	
Chnl 1	1	D	1	D	Chnl 1
	2	A	2	A	
Chnl 2	3	E	3	E	Chnl 2
	4	B	4	B	
Chnl 3	5	F	5	F	Chnl 3
	6	C	6	C	

HP ProLiant WS460c G6 Server Blade (1P Model)

Standard memory configuration (1 CPU model)

- 2GB (2 x 1GB) of PC3-10600 (DDR3-1333) UDIMMs
  or
  4GB (4 x 1GB) of PC3-10600 (DDR3-1333) UDIMMs

	CPU1		CPU2		
	slot #	population order	slot #	population order	
Chnl 1	1	D: 1GB DIMM (if 4GB model)	1	D: empty	Chnl 1
	2	A: 1GB DIMM	2	A: empty	
Chnl 2	3	E: empty	3	E: empty	Chnl 2
	4	B: 1GB DIMM	4	B: empty	
Chnl 3	5	F: empty	5	F: empty	Chnl 3
	6	C: 1GB DIMM (if 4GB model)	6	C: empty	

Standard Memory Plus Optional Memory (1 CPU model)

- 10 GB of PC3-10600 (DDR3-1333) UDIMMs (2 x 1GB plus 4 x 2GB); (2GB memory standard model)
- 8GB of PC3-10600 (DDR3-1333) UDIMMs (4 x 1GB plus 2 x 2GB); (4GB memory standard model)

Memory

	CPU1		CPU2		
	slot #	population order	slot #	population order	
Chnl 1	1	D: 1GB DIMM (if 4GB model), 2GB DIMM (if 2GB model)	1	D: empty	Chnl 1
	2	A: 1GB DIMM	2	A: empty	
Chnl 2	3	E: 2GB DIMM	3	E: empty	Chnl 2
	4	B: 1GB DIMM	4	B: empty	
Chnl 3	5	F: 2GB DIMM	5	F: empty	Chnl 3
	6	C: 1GB DIMM (if 4GB model), 2GB DIMM (if 2GB model)	6	C: empty	

Standard Memory Replaced with Optional Memory (1 CPU model)

- 96GB of PC3-8500 Quad-Rank RDIMMs (6 x 16GB)

	CPU1		CPU2		
	slot #	population order	slot #	population order	
Chnl 1	1	D: 16GB DIMM	1	D: empty	Chnl 1
	2	A: 16GB DIMM	2	A: empty	
Chnl 2	3	E: 16GB DIMM	3	E: empty	Chnl 2
	4	B: 16GB DIMM	4	B: empty	
Chnl 3	5	F: 16GB DIMM	5	F: empty	Chnl 3
	6	C: 16GB DIMM	6	C: empty	

UDIMM maximum configuration (1 CPU model)

- 24GB, consisting of six (6) 4GB dual-rank PC3-10600 UDIMMs

	CPU1		CPU2		
	slot #	population order	slot #	population order	
Chnl 1	1	D: 4GB DIMM	1	D: empty	Chnl 1
	2	A: 4GB DIMM	2	A: empty	
Chnl 2	3	E: 4GB DIMM	3	E: empty	Chnl 2
	4	B: 4GB DIMM	4	B: empty	
Chnl 3	5	F: 4GB DIMM	5	F: empty	Chnl 3
	6	C: 4GB DIMM	6	C: empty	

Memory

Standard Memory Replaced with Optional Memory (2 CPU Model)
RDIMM maximum configuration

- 192GB, consisting of twelve (12) 16GB quad-rank PC3-8500 RDIMMs

	CPU1		CPU2		
	slot #	population order	slot #	population order	
Chnl 1	1	D: 16GB DIMM	1	D: 16GB DIMM	Chnl 1
	2	A: 16GB DIMM	2	A: 16GB DIMM	
Chnl 2	3	E: 16GB DIMM	3	E: 16GB DIMM	Chnl 2
	4	B: 16GB DIMM	4	B: 16GB DIMM	
Chnl 3	5	F: 16GB DIMM	5	F: 16GB DIMM	Chnl 3
	6	C: 16GB DIMM	6	C: 16GB DIMM	

UDIMM maximum configuration (2 CPU model)

- 48GB, consisting of twelve (12) 4GB dual-rank PC3-10600 UDIMMs

	CPU1		CPU2		
	slot #	population order	slot #	population order	
Chnl 1	1	D: 4GB DIMM	1	D: 4GB DIMM	Chnl 1
	2	A: 4GB DIMM	2	A: 4GB DIMM	
Chnl 2	3	E: 4GB DIMM	3	E: 4GB DIMM	Chnl 2
	4	B: 4GB DIMM	4	B: 4GB DIMM	
Chnl 3	5	F: 4GB DIMM	5	F: 4GB DIMM	Chnl 3
	6	C: 4GB DIMM	6	C: 4GB DIMM	

NOTE: Capacity references are rounded to the common Gigabyte values.

- 1GB = 1024MB
- 2GB = 2048MB
- 4GB = 4096MB
- 8GB = 8192MB
- 16GB = 16384MB

Memory

Following are memory options available from HP:

HP Memory	**Registered DIMMs (RDIMMs)**	
	HP 2GB (1x2GB) Dual Rank x8 PC3-10600 (DDR3-1333) Registered CAS-9 Memory Kit	500656-B21
	HP 4GB (1x4GB) Dual Rank x4 PC3-10600 (DDR3-1333) Registered CAS-9 Memory Kit	500658-B21
	HP 4GB (1x4GB) Single Rank x4 PC3-10600 (DDR3-1333) Registered CAS-9 Memory Kit	593339-B21
	HP 4GB (1x4GB) Single Rank x4 PC3L-10600 (DDR3-1333) Registered CAS-9 Low Power Memory Kit	604504-B21
	HP 8GB (1x8GB) Dual Rank x4 PC3-10600 (DDR3-1333) Registered CAS-9 Memory Kit	500662-B21
	HP 8GB (1x8GB) Dual Rank x4 PC3L-10600 (DDR3-1333) Registered CAS-9 Low Power Memory Kit	604506-B21
	HP 16GB (1x16GB) Quad Rank x4 PC3-8500 (DDR3-1066) Registered CAS-7 Memory Kit	500666-B21
	Unbuffered with ECC DIMMs (UDIMMs)	
	HP 1GB (1x1GB) Single Rank x8 PC3-10600 (DDR3-1333) Unbuffered CAS-9 Memory Kit	500668-B21
	HP 2GB (1x2GB) Dual Rank x8 PC3-10600 (DDR3-1333) Unbuffered CAS-9 Memory Kit	500670-B21
	HP 4GB (1x4GB) Dual Rank x8 PC3-10600 (DDR3-1333) Unbuffered CAS-9 Memory Kit	500672-B21
	NOTE: All DDR3 memory option kits consist of one DIMM per kit. For detailed memory configuration rules and guidelines, please use the Online DDR3 Memory Configuration Tool: www.hp.com/go/ddr3memory-configurator.	

Storage

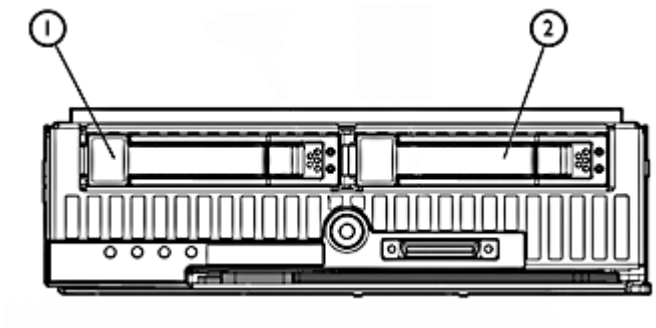

1-2 2 x SFF SAS Hot Plug Hard Drives

Hard Drives

NOTE: The components of a storage subsystem (e.g. the drive, the HBA/controller, firmware, and the server backplane) should operate at the same data transfer rate or the system bandwidth will be negotiated down to an acceptable level for all components.

SAS Hot Plug SFF (2.5-inch) Enterprise (ENT) Drives

	Quantity Supported	Position Supported	Controller
900GB 6G SAS 10K 600GB 6G SAS 10K 450GB 6G SAS 10K 300GB 6G SAS 15K 300GB 6G SAS 10K 146GB 6G SAS 15K	2	1-2	HP Smart Array P410i Controller

SAS Hot Plug SFF (2.5-inch) Midline (MDL) Drives

	Quantity Supported	Position Supported	Controller
1TB 6G SAS 7.2K 500GB 6G SAS 7.2K	2	1-2	HP Smart Array P410i Controller

6G SAS Hot Plug Enterprise Performance Solid State Drives

	Quantity Supported	Position Supported	Controller
400GB 6G SAS SLC 200GB 6G SAS SLC	Up to 8	1-8	HP Smart Array P410i Controller

SATA Hot Plug SFF (2.5-inch) Midline (MDL) Drives

	Quantity Supported	Position Supported	Controller
1TB 3G SATA 7.2K 500GB 3G SATA 7.2K	Up to 8	1-8	HP Smart Array P410i Controller

Storage

SATA Hot Plug 2.5" Enterprise Mainstream Solid State Drives

	Quantity Supported	Position Supported	Controller
400GB 3G SATA MLC 200GB 3G SATA MLC 100GB 3G SATA MLC	Up to 8	1-8	HP Smart Array P410i Controller

Technical Specifications

System Unit	**Dimensions** (H x W x D) (with bezel)	7.154 x 2.19 x 20.058 in (18.17 x 5.56 x 50.95 cm)	
	Weight (approximate)	Maximum (all hard drives and processors installed)	14.20 lb (6.44 kg)
		Minimum (one hard drive and processor installed)	10.75 lb (4.87 kg)
	Power Specifications	For power specifications including Input Requirements, BTU Rating, and Power Supply Output, please see the HP BladeSystem c-Class Enclosures QuickSpecs located at URL: HP BladeSystem c3000 Enclosure QuickSpecs: http://h18000.www1.hp.com/products/quickspecs/12790_div/12790_div.html HP BladeSystem c7000 Enclosure QuickSpecs: http://h18000.www1.hp.com/products/quickspecs/12810_div/12810_div.html To review typical system power ratings use the HP BladeSystem Power Sizer which is available via the online tool located at URL: http://www.hp.com/go/bladesystem/powercalculator	
	System Inlet Temperature	Operating	10° to 35°C (50° to 95°F) at sea level with an altitude derating of 1.0°C per every 305 m (1.8°F per every 1000 ft) above sea level to a maximum of 3050 m (10,000 ft), no direct sustained sunlight. Maximum rate of change is 10°C/hr (18°F/hr). The upper limit may be limited by the type and number of options installed. System performance may be reduced if operating with a fan fault or above 30°C (86°F).
		Non-operating	-30° to 60°C (-22° to 140°F). Maximum rate of change is 20°C/hr (36°F/hr).
	Relative Humidity (non-condensing)	Operating	10 to 90% relative humidity (Rh), 28°C (82.4°F) maximum wet bulb temperature, non-condensing.
		Non-operating	5 to 95% relative humidity (Rh), 38.7°C (101.7°F) maximum wet bulb temperature, non-condensing.
	Altitude	Operating	3050 m (10,000 ft). This value may be limited by the type and number of options installed. Maximum allowable altitude change rate is 457 m/min (1500 ft/min).
		Non-operating	9144 m (30,000 ft). Maximum allowable altitude change rate is 457 m/min (1500 ft/min).
	Acoustic Noise	For acoustic noise specifications, please see the HP BladeSystem c-Class Enclosures QuickSpecs located at URL:	

		HP BladeSystem c3000 Enclosure QuickSpecs: http://h18000.www1.hp.com/products/quickspecs/12790_div/12790_div.html HP BladeSystem c7000 Enclosure QuickSpecs: http://h18000.www1.hp.com/products/quickspecs/12810_div/12810_div.html
HP Smart Array P410i Controller	**Disk Drive Interface**	3Gb (6Gb Capable) SAS (Serial Attached SCSI) 1.5Gb (3Gb Capable) SATA (Serial Advanced Technology Attachment)
	Server Interface	x4 PCI Express host interface
	Cache Memory	0 MB (none) standard Optional 256MB or 512MB Cache Memory
	Logical Drives Supported	2 (with standard 0MB cache)
	Maximum Logical Drive Capacity	32 (with optional 256MB cache) 64 (with optional 512MB cache)
	Host Memory Addressing	64-bit, supporting servers memory space greater than 4 GB
	RAID Support	RAID 1(Mirroring) RAID 0 (Striping)
	Upgradeable Firmware	Controller: Upgradeable Firmware with Recovery ROM feature Online Drive Flash (with SAS drives) requires 256MB or 512MB module
Embedded NC532i Dual Port Flex-10 10GbE Multifunction Server Adapter	**Type**	Integrated dual-port KR 10GbE
	Network Processor	Broadcom 57711
	Data Transfer Method	x4 PCI Express Generation 2
	Network Transfer Rate	Two ports, each at 20 Gbps full duplex; 40 Gbps aggregate full duplex theoretical bandwidth **NOTE:** Each port is autosensing 1 Gb / 10 Gb, and can interoperate with 1 Gb HP BladeSystem c-Class interconnect components. **NOTE:** Each port on the NC532i adapter transmits from the server at only 20 Gbps (theoretical) full duplex.
	IEEE Compliance	802.1p, 802.1q, 802.3u, 802.3ad, 802.3ae, 802.3ap (10GBase-KX4), 802.3x and 802.3z

Technical Specifications

GPU Capacity Planning for VDI with RemoteFX

GPU Capacity Planning

Each virtual machine will have an amount of the VRAM reserved from the GPU in the server. The reservation is taken from the server GPU's dedicated VRAM. The amount of VRAM reserved for a given virtual machine is based on the number of monitors and their resolutions, shown in the table below

Maximum resolution	Maximum Number of Monitors in Virtual Machine Setting			
	1 Monitor	2 Monitors	3 Monitors	4 Monitors
1024x768	75MB	10MB	135MB	165MB
1280x1024	125MB	175MB	225MB	275MB
1600x1200	184MB	257MB	330MB	
1900x1200	220MB	308MB		

NVIDIA Quadro FX 2800M graphics adapter

Memory size	1 GB
Memory type	GDDR-3
Memory interface	256-bit
Card type	MXM-v.3.0
I/O interface	PCIe (x16); **NOTE:** HP WS460c G6 I/O slot is PCIe x8
Max power consumption	75W
API	DirectX 10.1, Shader Model 4.0; OpenGL3.2
Upgradeable Firmware	Upgradeable Firmware
Server Operating Systems	Microsoft® Windows Server 2008 R2 SP1 (64-bit) Standard, Enterprise and DataCenter editions
Client Operating Systems	Genuine Microsoft® Windows 7.0® Business (32-bit and 64-bit Microsoft Windows Vista Business SP2 (32-bit & 64-bit) Microsoft Windows XP Professional SP3 (32-bit) Microsoft Windows XP Professional x64 edition with SP2 Red Hat Enterprise Linux (RHEL) 4.8 and 5.3 (64-bit only)

Technical Specifications

NVIDIA Quadro FX 4000 graphics adapter	**Memory size**	2GB
	Memory type	GDDR-5
	Memory interface	256-bit
	I/O interface	PCIe (x16) Gen 2
	Max power consumption	142W
	API	DirectX 10.1, Shader Model 4.0; OpenGL3.3
	Server Operating Systems	Microsoft® Windows Server 2008 R2 SP1 (64-bit) Standard, Enterprise and DataCenter editions Citrix XenServer 6 Enterprise and Platinum editions
	Client Operating Systems	Genuine Microsoft® Windows 7.0® Business (32-bit and 64-bit Microsoft Windows Vista Business SP2 (32-bit & 64-bit) Microsoft Windows XP Professional SP3 (32-bit) Microsoft Windows XP Professional x64 edition with SP2 Red Hat Enterprise Linux (RHEL) 4.8 and 5.3 (64-bit only)
NVIDIA Quadro 5000 graphics adapter	**Memory size**	2.5 GB
	Memory type	GDDR-5
	Memory interface	320-bit
	I/O interface	PCIe (x16) Gen 2
	Max power consumption	152W
	API	DirectX 11, Shader Model 5.0; OpenGL4.1
	Server Operating Systems	Microsoft® Windows Server 2008 R2 SP1 (64-bit) Standard, Enterprise and DataCenter editions Citrix XenServer 6 Enterprise and Platinum Edition
	Client Operating Systems	Genuine Microsoft® Windows 7.0® Business (32-bit and 64-bit Microsoft Windows Vista Business SP2 (32-bit & 64-bit) Microsoft Windows XP Professional SP3 (32-bit) Microsoft Windows XP Professional x64 edition with SP2 Red Hat Enterprise Linux (RHEL) 4.8 and 5.3 (64-bit only)

Technical Specifications

NVIDIA Quadro 6000 graphics adapter	**Memory size**	6.0 GB
	Memory type	GDDR-5
	Memory interface	384-bit
	I/O interface	PCIe (x16) Gen 2
	Max power consumption	225W
	API	DirectX 11, Shader Model 5.0; OpenGL4.1
	Server Operating Systems	Microsoft® Windows Server 2008 R2 SP1 (64-bit) Standard, Enterprise and DataCenter editions Citrix XenServer 6 Enterprise and Platinum Edition
	Client Operating Systems	Genuine Microsoft® Windows 7.0® Business (32-bit and 64-bit Microsoft Windows Vista Business SP2 (32-bit & 64-bit) Microsoft Windows XP Professional SP3 (32-bit) Microsoft Windows XP Professional x64 edition with SP2 Red Hat Enterprise Linux (RHEL) 4.8 and 5.3 (64-bit only)
AMD Firestream FS9350 Compute Accelerator	**Memory size**	2.0 GB
	Memory type	GDDR-5
	Stream Cores	1440
	I/O interface	PCIe (x16) Gen 2
	Max power consumption	175W
	Supported Operating Systems	RHEL 5
NVIDIA Tesla M2070Q 6GB Module	**Memory size**	6.0 GB
	Memory type	GDDR-5
	Memory interface	384-bit
	I/O interface	PCIe (x16) Gen 2
	Max power consumption	225W
	Supported Operating Systems	RHEL 5 SLES 11 Windows Server 2008

Environment-friendly Products and Approach	**End-of-life Management and Recycling**	Hewlett-Packard offers end-of-life HP product return, trade-in, and recycling programs in many geographic areas. For trade-in information, please go to: http://www.hp.com/go/green. To recycle your product, please go to: http://www.hp.com/go/green or contact your nearest HP sales office. Products returned to HP will be recycled, recovered or disposed of in a responsible manner. The EU WEEE directive (2002/95/EC) requires manufacturers to provide treatment information for each product type for use by treatment facilities. This information (product disassembly instructions) is posted on the Hewlett Packard web site at: http://www.hp.com/go/green. These instructions may be used by recyclers and other WEEE treatment facilities as well as HP OEM customers who integrate and re-sell HP equipment.

© Copyright 2012 Hewlett-Packard Development Company, L.P.

The information contained herein is subject to change without notice.

Microsoft and Windows NT are US registered trademarks of Microsoft Corporation. Intel, the Intel logo, Xeon and Xeon Inside are trademarks of Intel Corporation in the U.S. and other countries.

The only warranties for HP products and services are set forth in the express warranty statements accompanying such products and services. Nothing herein should be construed as constituting an additional warranty. HP shall not be liable for technical or editorial errors or omissions contained herein.

For hard drives, 1GB = 1 billion bytes. Actual formatted capacity is less.