HPE ProLiant MicroServer Gen10 Plus v2 User Guide

Part Number: 30-A34A7DFD-002a
Published: September 2023
Edition: 2a

HPE ProLiant MicroServer Gen10 Plus v2 User Guide

Abstract

This document is for the person who installs, administers, and troubleshoots servers and storage systems. Hewlett Packard Enterprise assumes you are qualified in the servicing of computer equipment and trained in recognizing hazards in products with hazardous energy levels.

Part Number: 30-A34A7DFD-002a
Published: September 2023
Edition: 2a

© Copyright 2022–2023 Hewlett Packard Enterprise Development LP

Notices

The information contained herein is subject to change without notice. The only warranties for Hewlett Packard Enterprise products and services are set forth in the express warranty statements accompanying such products and services. Nothing herein should be construed as constituting an additional warranty. Hewlett Packard Enterprise shall not be liable for technical or editorial errors or omissions contained herein.

Confidential computer software. Valid license from Hewlett Packard Enterprise required for possession, use, or copying. Consistent with FAR 12.211 and 12.212, Commercial Computer Software, Computer Software Documentation, and Technical Data for Commercial Items are licensed to the U.S. Government under vendor's standard commercial license.

Links to third-party websites take you outside the Hewlett Packard Enterprise website. Hewlett Packard Enterprise has no control over and is not responsible for information outside the Hewlett Packard Enterprise website.

Acknowledgments

Intel®, Intel®Virtual RAID on CPU (Intel® VROC), Pentium® Gold, and Xeon® are trademarks of Intel Corporation or its subsidiaries in the U.S. and other countries.

Linux® is the registered trademark of Linus Torvalds in the U.S. and other countries.

Microsoft®, Windows®, and Windows Server® are either registered trademarks or trademarks of Microsoft Corporation in the United States and/or other countries.

All third-party marks are property of their respective owners.

Revision history

Part number	Publication date	Edition	Summary of changes
30-A34A7DFD-001	September 2022	1	Initial release
30-A34A7DFD-002a	September 2023	2a	• Updated the Setting up the server prerequisites. • Added the Server data backup topic. • Updated the RDX product support link. • Replaced the Configuration and diagnostic utilities chapter with the task-based Configuration resources.

Table of contents

Component identification 7
- Front panel components 7
- Front panel LEDs and button 8
  - Front panel LED power fault codes 9
- Rear panel components 10
  - Display device setup 11
- Rear panel LEDs 12
- System board components 13
  - System maintenance switch descriptions 14
  - DIMM label identification 15
- Drive bay numbering 17
- Drive screws 17
- PCIe4 slot description 18
- Riser board slots 19
- Trusted Platform Module 2.0 20
  - Trusted Platform Module 2.0 guidelines 21
  - BitLocker recovery key/password retention guidelines 22

Setup 22
- Initial system installation 23
  - HPE Installation Service 23
  - Setting up the server 24
- Server orientation options 29
  - Position the server in a horizontal orientation 29
  - Position the server in a vertical orientation 31
- Operational requirements 33
  - Site requirements 33
  - Space and airflow requirements 34
  - Temperature requirements 34
  - Power requirements 34
  - Electrical grounding requirements 35
- Server warnings and cautions 36
- Electrostatic discharge 37

Operations 37
- Power down the server 38

Removing the front bezel....38
Removing the chassis cover....41
Removing the system board assembly....42
Installing the system board assembly....45
Installing the chassis cover....47
Installing the front bezel....48
Power up the server....50
Hardware options installation....51
Server data backup....51
Hardware option installation guidelines....52
Drive support information....53
Drive installation guidelines....53
Installing an LFF drive....54
Installing an SFF drive....57
Memory option....64
Memory population rules....65
DIMM installation guidelines....66
Installing a DIMM....66
Storage controller options....69
Preparing the server for storage controller installation....69
Installing a type-p PCIe plug-in controller option....70
Expansion card options....73
Installing an expansion card....73
Remove the air baffle from an expansion card....77
Install a low-profile bracket on an expansion card....77
Internal USB device option....79
Install an internal USB device....79
External HPE RDX Backup System option....81
iLO enablement option....81
Installing the iLO enablement option....82
Cabling....86
Cabling guidelines....86
Storage cabling....88
Four-bay drive cabling: Onboard SATA controller cabling....88
Four-bay drive cabling: Type-p controller cabling....90
Fan cabling....91
Configuration resources....91
Updating firmware or system ROM....92

Configuring the server....93
Configuring storage controllers....94
Deploying an OS....95
Configuring security....96
Optimizing the server....96
Server management....97
Managing Linux-based high performance compute clusters....97
Troubleshooting....97
NMI functionality....98
Troubleshooting resources....98
System battery replacement....98
System battery information....99
Removing and replacing the system battery....99
Safety, warranty, and regulatory information....102
Regulatory information....102
VCCI-B notice for products that comply with CISPR 32....103
Notices for Eurasian Economic Union....103
Turkey RoHS material content declaration....104
Ukraine RoHS material content declaration....105
Warranty information....105
Specifications....105
Environmental specifications....105
Mechanical specifications....106
Websites....107
Support and other resources....107
Accessing Hewlett Packard Enterprise Support....108
Accessing updates....108
Customer self repair....109
Remote support....109
Documentation feedback....110

Component identification

This chapter describes the external and internal server features and components.

Subtopics

Front panel components
Front panel LEDs and button
Rear panel components
Rear panel LEDs
System board components
Drive bay numbering
Drive screws
PCIe4 slot description
Riser board slots
Trusted Platform Module 2.0

Front panel components

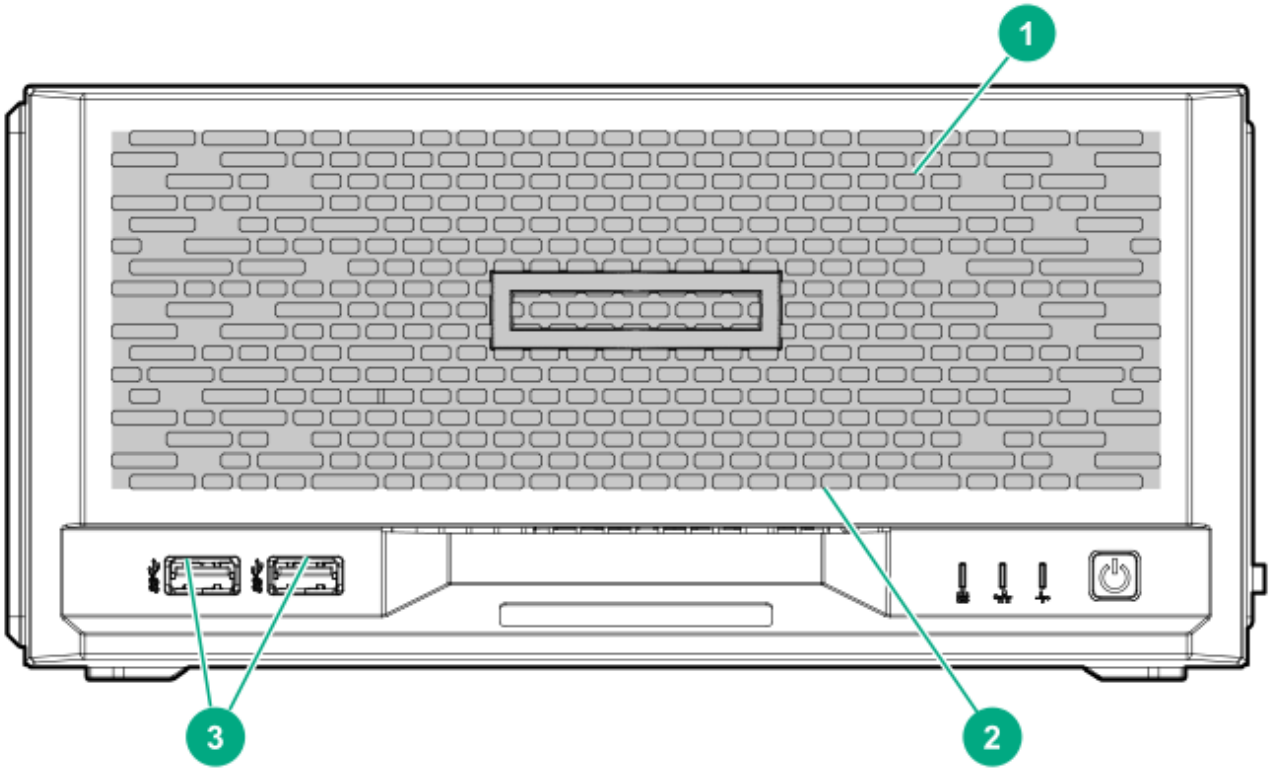

Item	Component	Description
1	Drive bays (4, behind the front bezel)	The drive bays support 3.5-inch LFF SATA drives. To support 2.5-inch SFF drives, install the LFF-to-SFF drive converter option.
2	Front bezel	To access the drive bays, remove this bezel.
3	USB 3.2 Gen 2 Type-A ports [1]	Connect USB devices. These ports are backwards compatible with earlier USB Type-A version devices.

[1] These ports are also known as SuperSpeed USB 10 Gb/s ports. The appropriate cable and compatible hardware are required to take advantage of the 10 Gb/s data transfer speed.

Front panel LEDs and button

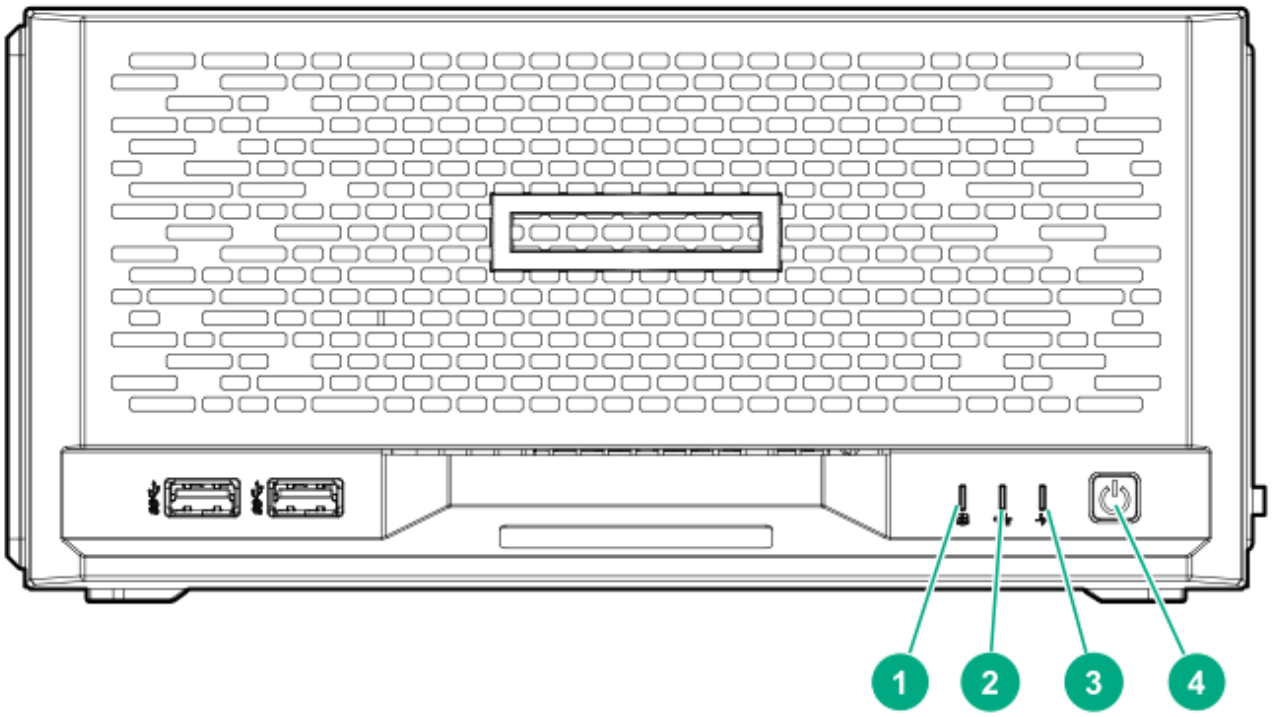

Item	Description	Status	Definition
1	Drive activity LED [1]	Flashing green	Ongoing drive activity

Item	Description	Status	Definition
		Off	No drive activity
2	NIC status LED [2] [3]	Solid green	Linked to network
		Flashing green	Network active
		Off	No network activity
3	Health LED [3]	Solid green	Normal
		Flashing green	iLO is rebooting
		Flashing amber	System degraded [4]
		Flashing red	System critical [4]
4	Power on/Standby button and system power LED [3]	Solid green	System on and normal operation
		Flashing green	Performing power-on sequence
		Amber	System in standby
		Off	No power present [5]

[1] This LED only reflects the status of drives that are connected to the onboard SATA port.
[2] This LED reflects the status of the onboard NIC ports and the optional iLO dedicated network port.
[3] When these LEDs flash simultaneously, a power fault has occurred. For more information, see Front panel LED power fault codes.
[4] If the health LED indicates a degraded or critical state, use iLO to review the system health status.
[5] Facility power is not present, power cord is not attached, or power supply failure has occurred.

Subtopics

Front panel LED power fault codes

Front panel LED power fault codes

The following table provides a list of power fault codes, and the subsystems that are affected. Not all power faults are used by all servers.

Subsystem	LED behavior
System board	1 flash
Processor	2 flashes
Memory	3 flashes
Riser board PCIe slots	4 flashes
FlexibleLOM	5 flashes

Subsystem	LED behavior
Storage controller	6 flashes
System board PCIe slots	7 flashes
Power backplane	8 flashes
Storage backplane	9 flashes
Power supply	10 flashes
PCIe expansion cards installed in riser board	11 flashes
Chassis	12 flashes
GPU card	13 flashes

Rear panel components

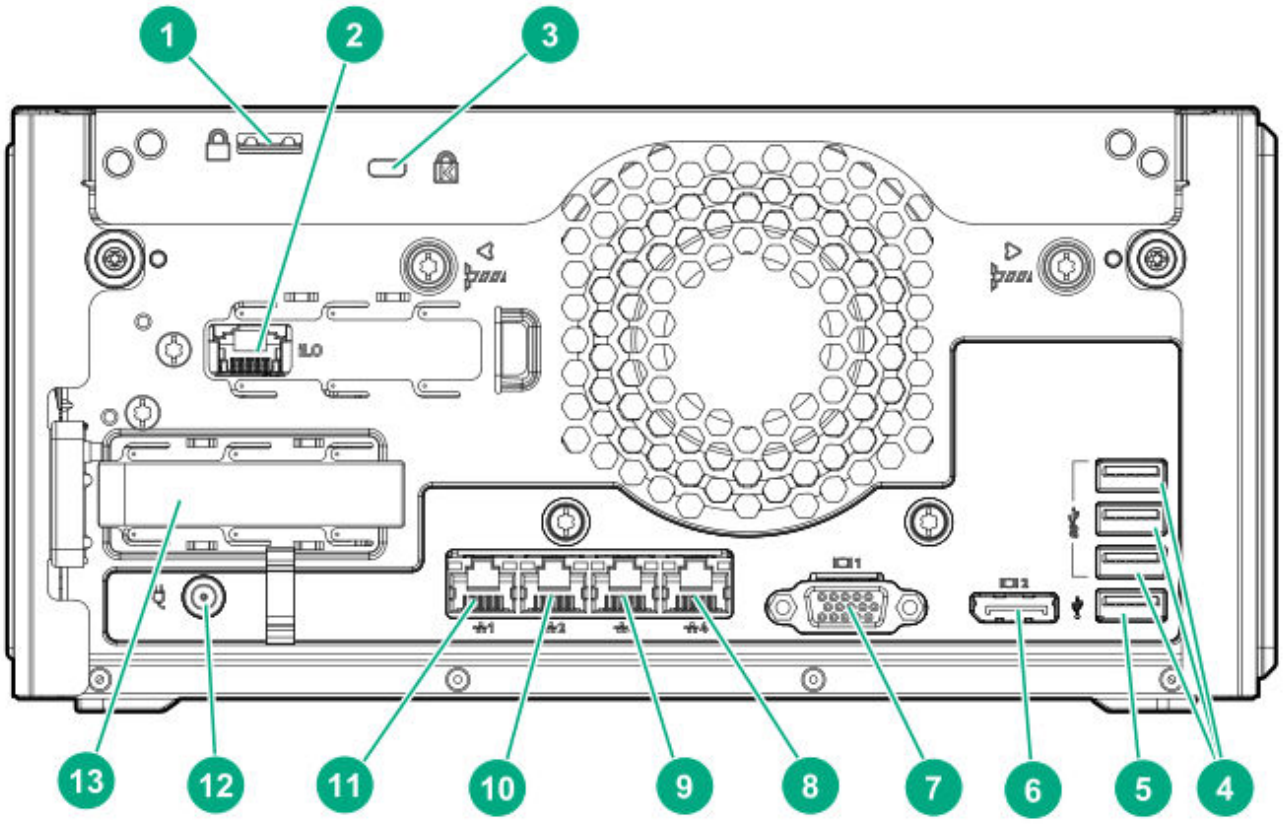

Item	Component	Description
1	Padlock eye	To lock the chassis cover and prevent access to the internal co mponents, attach a padlock here.
2	iLO dedicated network port	To connect iLO to a dedicated management network, connect a standard Ethernet cable here. This port requires the installation of the iLO enablement option.
3	Kensington security slot	To secure the server to a heavy or immovable object, connect a n antitheft security cable here.
4	USB 3.2 Gen 1 Type-A ports [1]	Connect USB devices. These ports are backwards compatible w ith earlier USB Type-A version devices.
5	USB 2.0 port	
6	DisplayPort 1.1a	Connects to a high-resolution digital display device.
7	VGA port	Connects to an analog display device.
8	1 Gb RJ45 port 4	To connect the server to a wired network, connect a standard E thernet cable here.
9	1 Gb RJ45 port 3	
10	1 Gb RJ45 port 2	
11	1 Gb RJ45 port 1/iLO shared n etwork port	To connect the server to a wired network, connect a standard E thernet cable here. When the iLO enablement option is installed, this port can be c onfigured to handle both server network and iLO network traffi c.
12	Power jack	Connects the power cord.
13	PCIe4 x16 expansion slot	Connects a half-height, half-length (low-profile) PCIe4 expansi on card option.

[1] These ports are also known as SuperSpeed USB 5 Gb/s ports. The appropriate cable and compatible hardware are required to take advantage of the 5 Gb/s data transfer speed.

Subtopics

Display device setup

Display device setup

This server supports both VGA port and DisplayPort 1.1a. Before connecting a display device to this server, review the information below.

- Whenever possible, use the same display connection type. For example, if your PC or monitor only has a VGA output, connect it to the server VGA port. Use of any kind of adapter or converter cable or dongle might lead to decreased display quality or a lag over the connection.
- DisplayPort connection: When connecting an HDMI or DVI display to the DisplayPort, use an active type adapter. Passive type adapter—marked with the DP++ symbol—is not supported.
- Display output modes:
  - If you connect two display devices to the VGA port and DisplayPort, the same image is shown on both devices—screen mirroring mode.
  - The embedded video controller in the iLO 5 chipset does not support dual display or screen extension mode. To enable dual display mode, install a compatible PCIe4 graphics card that supports this feature in the expansion slot.

Rear panel LEDs

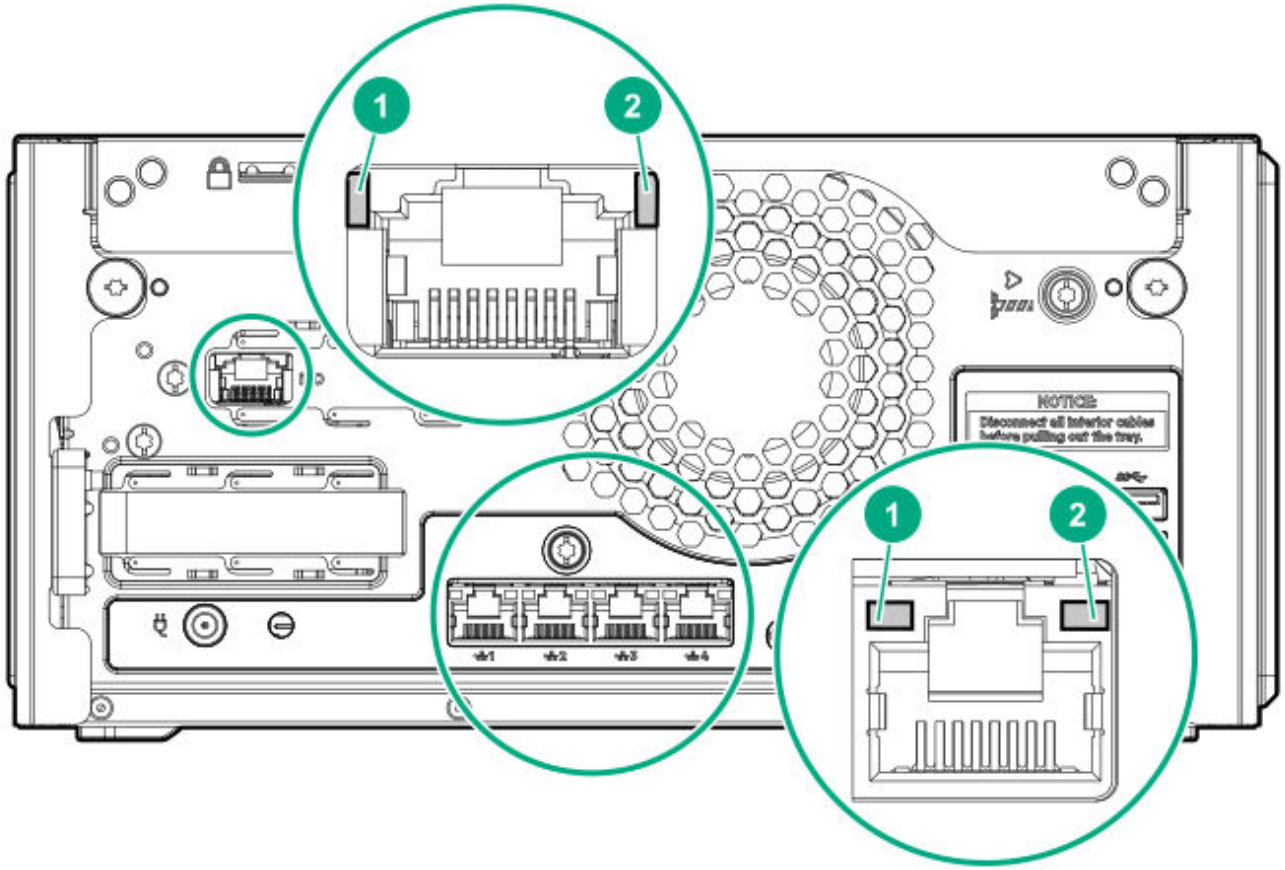

Item	Description	Status	Definition
1	NIC link	Solid green	Network link
		Off	No network link
2	NIC status	Solid green	Linked to network
		Flashing green	Network active
		Off	No network activity

System board components

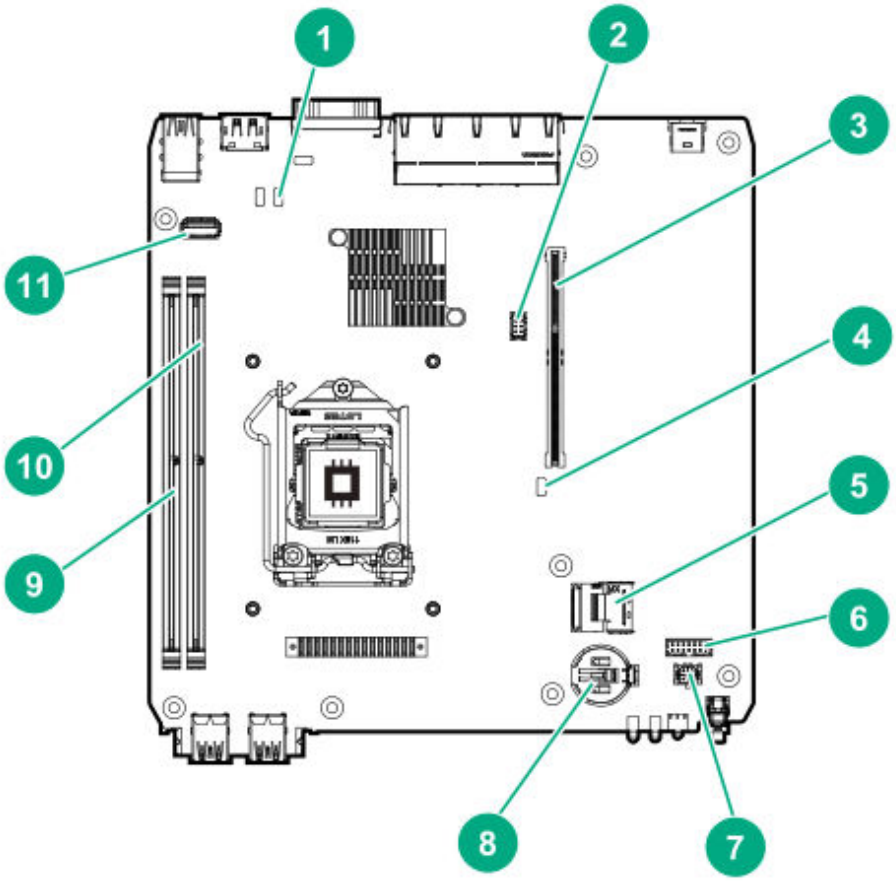

Item	Component	Description
1	CMOS header	Use this header to clear the CMOS and reset the BIOS settings to their factory default values.
2	Fan connector	Connects the fan cable.

Item	Component	Description
3	Riser connector	Connects the system riser board.
4	System maintenance switch	Use this switch to physically configure various server settings.
5	SATA 6GB/s port	Connects the drive SATA cable.
6	Drive sideband connector	Connects the drive sideband signal cable.
7	Drive power connector	Connects the drive power cable.
8	System battery	This battery provides power to the server CMOS and real-time clock.
9	DIMM slot 1B	These slots support standard UDIMMs with ECC. When installing a single UDIMM only, install it in the DIMM slot 2A.
10	DIMM slot 2A	
11	Internal USB 3.2 Gen 1 port	Connect a USB device, such as a USB security key or a USB drive key, intended for permanent use. The internal connection avoids issues of clearance on the front or rear of the server and prevents physical access to secure data.

Subtopics

System maintenance switch descriptions
DIMM label identification

System maintenance switch descriptions

Position	Default	Function
S1 1	Off	• Off—iLO 5 security is enabled. • On—iLO 5 security is disabled.
S2	Off	Reserved
S3	Off	Reserved
S4	Off	Reserved
S5 1	Off	• Off—Power-on password is enabled. • On—Power-on password is disabled.
S6 1, 2 3	Off	• Off—No function

Position	Default	Function
		• On—Restore default manufacturing settings
S7	Off	Reserved
S8	Off	Reserved
S9	Off	Reserved
S10	Off	Reserved
S11	Off	Reserved
S12	Off	Reserved

1 To access the redundant ROM, set S1, S5, and S6 to On.
2 When the system maintenance switch position 6 is set to the On position, the system is prepared to restore all configuration settings to their manufacturing defaults.
3 When the system maintenance switch position 6 is set to the On position and Secure Boot is enabled, some configurations cannot be restored. For more information, see Configuring the server.

DIMM label identification

To determine DIMM characteristics, see the label attached to the DIMM. The information in this section helps you to use the label to locate specific information about the DIMM.

For more information about product features, specifications, options, configurations, and compatibility, see the HPE DDR4 SmartMemory QuickSpecs on the Hewlett Packard Enterprise website (**https://www.hpe.com/support/DDR4SmartMemoryQS**).

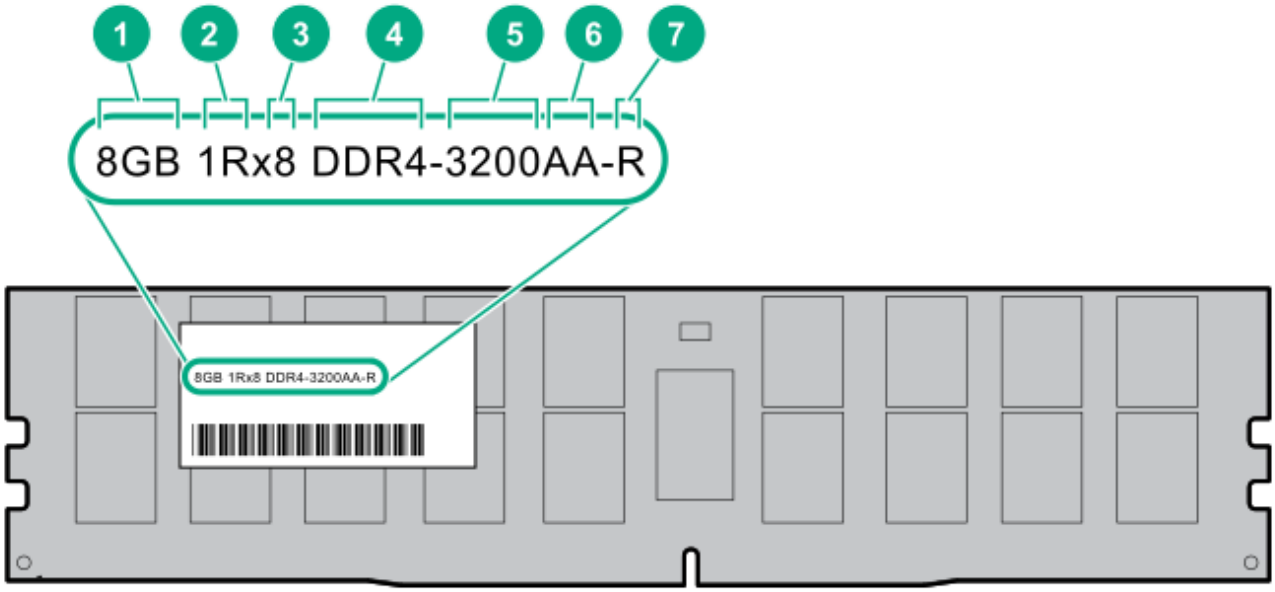

Item	Description	Example
1	Capacity	8 GB 16 GB 32 GB 64 GB 128 GB 256 GB
2	Rank	1R = Single rank 2R = Dual rank 4R = Quad rank 8R = Octal rank
3	Data width on DRAM	x4 = 4-bit x8 = 8-bit
4	Memory generation	PC4 = DDR4
5	Maximum memory speed	3200 MT/s
6	CAS latency	AA = CAS 22-22-22 AA = CAS 26-22-22 (for 3DS LRDIMM)
7	DIMM type	E = Unbuffered ECC (UDIMM)

Item	Description	Example
		R = RDIMM (registered) L = LRDIMM (load reduced)

Drive bay numbering

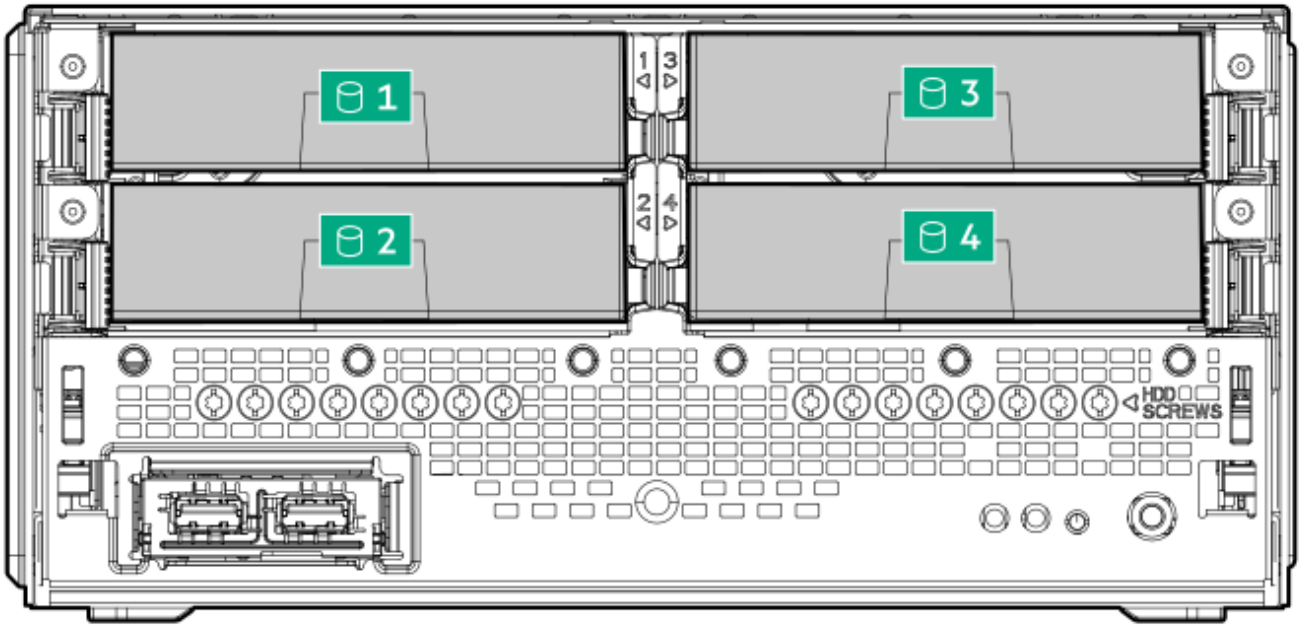

Drive screws

There are 16 T-15 Torx screws located under the drive bays. Use these screws to install drives in the server.

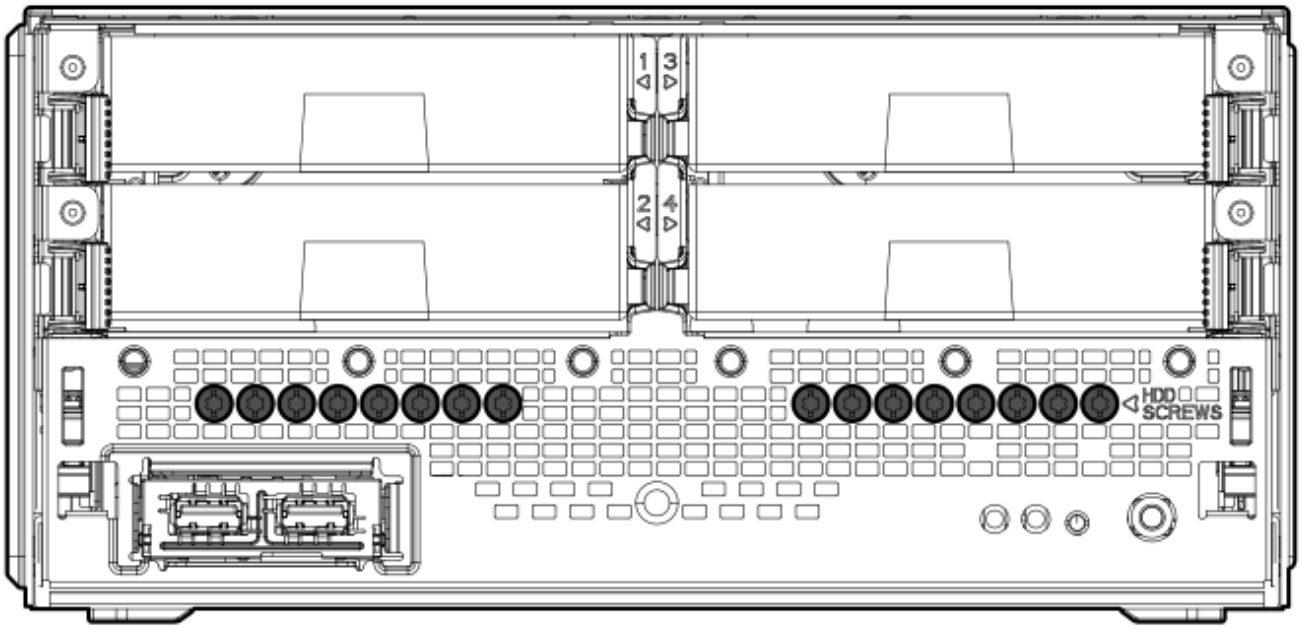

PCIe4 slot description

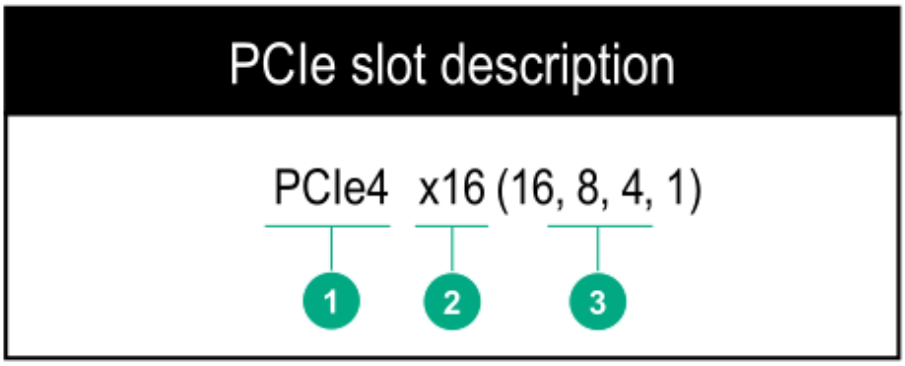

Item	Description	Definition
1	PCI Express version	Each PCIe version corresponds to a specific data transfer rate between the processor and peripheral devices. Gene rally, a version update corresponds to an increase in tran sfer rate. • PCIe 1.x

Item	Description	Definition
		• PCIe 2.x • PCIe 3.x • PCIe 4.x The PCIe technology is under constant development. For the latest information, see the **PCI-SIG website**.
2	Physical connector link width	PCIe devices communicate through a logical connection called an interconnect or link. At the physical level, a link is composed of one or more lanes. The number of lanes i s written with an x prefix with x16 being the largest size in common use. • x1 • x2 • x4 • x8 • x16
3	Negotiable link width	These numbers correspond to the maximum link bandwi dth supported by the slot.

Riser board slots

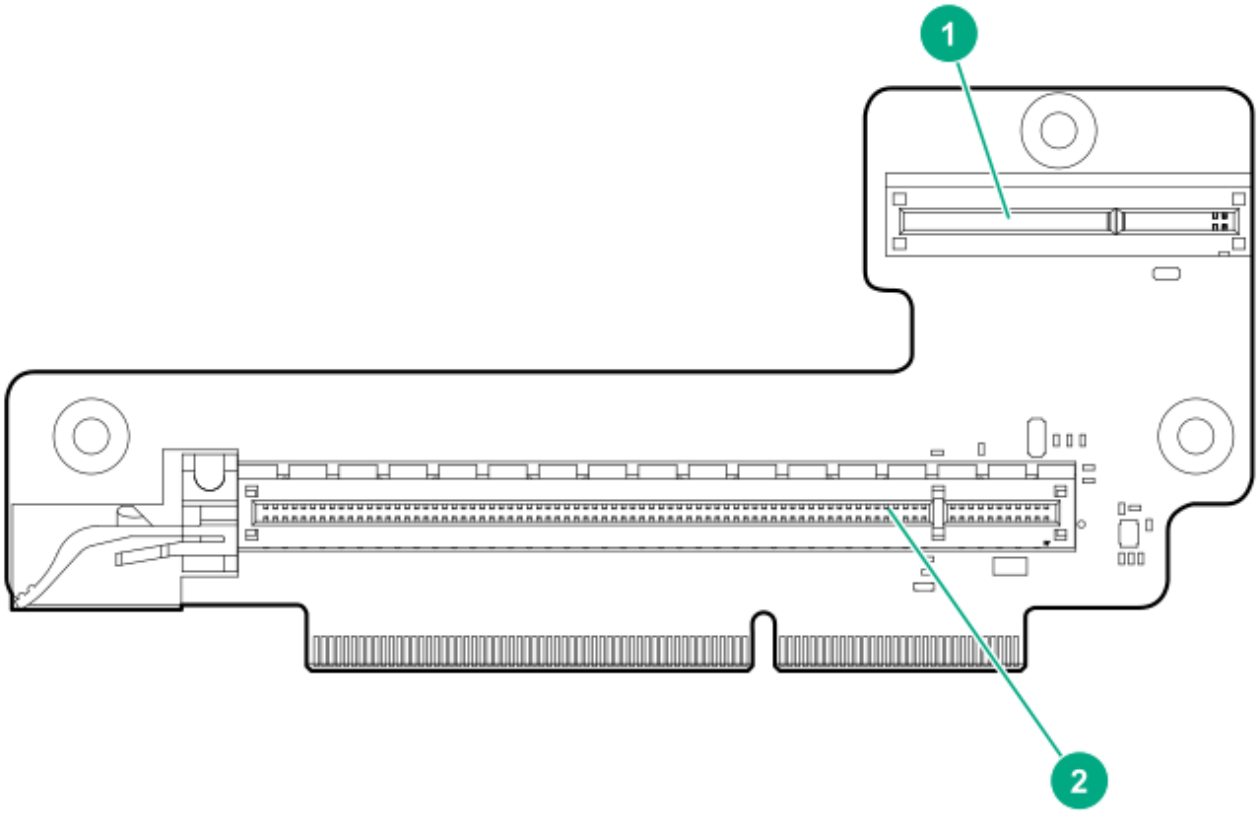

Item	Description	Supported option
1	iLO dedicated network module slot	Install the iLO enablement option here.
2	PCIe4 x16 expansion slot	Install a half-height, half-length (low-profile) PCIe4 expansion card here. For list of supported expansion options, see the product QuickSpecs on the server website at **https://www.hpe.com/servers/microserver-gen10-plus-v2**.

Trusted Platform Module 2.0

The Trusted Platform Module 2.0 (TPM) is a hardware-based system security feature that securely store artifacts used to authenticate the platform. These artifacts can include passwords, certificates, and encryption keys.

The TPM 2.0 is embedded on the server system board.

The TPM 2.0 is supported with specific operating system support such as Microsoft Windows Server 2012 R2 and later. For more information about operating system support, see the product QuickSpecs on the Hewlett Packard Enterprise website (**https://www.hpe.com/info/qs**). For more information about Microsoft Windows BitLocker Drive Encryption feature, see the Microsoft website (**https://www.microsoft.com**).

Subtopics

Trusted Platform Module 2.0 guidelines
BitLocker recovery key/password retention guidelines

Trusted Platform Module 2.0 guidelines

CAUTION:

- Always observe the TPM guidelines in this section. Failure to follow these guidelines can cause hardware damage or halt data access.
- If you do not follow procedures for modifying the server and suspending or disabling the TPM in the OS, an OS that is using TPM might lock all data access. This includes updating system or option firmware, replacing hardware such as the system board and drives, and modifying TPM OS settings.
- Changing the TPM mode after installing an OS might cause problems, including loss of data.

Hewlett Packard Enterprise SPECIAL REMINDER: Before enabling TPM functionality on this system, you must ensure that your intended use of TPM complies with relevant local laws, regulations and policies, and approvals or licenses must be obtained if applicable.

慧与特别提醒：在您启用系统中的TPM功能前，请务必确认您对TPM的使用遵守当地相关法律、法规及政策，并已事先获得所需的一切批准及许可（如适用），因您未获得相应的操作/使用许可而导致的违规问题，皆由您自行承担全部责任，与慧与无涉。

- When the embedded TPM is enabled:
  - In UEFI boot mode, the Trusted Platform Module operates in TPM 2.0 mode.
  - In legacy boot mode, the Trusted Platform Module operation is not supported.
- Use the UEFI System Utilities to configure the TPM. From the **System Utilities** screen, select **System Configuration > BIOS/Platform Configuration (RBSU) > Server Security > Trusted Platform Module options**. For more information, see the UEFI user guide:

https://www.hpe.com/support/UEFIGen10-UG-en

- When using the Microsoft Windows BitLocker Drive Encryption feature, always retain the recovery key or password. The recovery key or password is required to enter Recovery Mode after BitLocker detects a possible compromise of system integrity.
- HPE is not liable for blocked data access caused by improper TPM use. For operating instructions, see the documentation for the encryption technology feature provided by the operating system.

BitLocker recovery key/password retention guidelines

The recovery key/password is generated during BitLocker setup, and can be saved and printed after BitLocker is enabled. When using BitLocker, always retain the recovery key/password. The recovery key/password is required to enter Recovery Mode after BitLocker detects a possible compromise of system integrity.

To help ensure maximum security, observe the following guidelines when retaining the recovery key/password:

- Always store the recovery key/password in multiple locations.
- Always store copies of the recovery key/password away from the server.
- Do not save the recovery key/password on an encrypted drive.

Setup

This chapter describes general operational requirements and safety reminders, as well the initial setup procedure for the server.

Subtopics

Initial system installation
Server orientation options
Operational requirements
Server warnings and cautions
Electrostatic discharge

Initial system installation

Depending on your technical expertise and the complexity of the product, for the initial system installation, select one of the following options:

- Ordering the HPE Installation Service
- Setting up the server

Subtopics

HPE Installation Service
Setting up the server

HPE Installation Service

HPE Installation Service provides basic installation of Hewlett Packard Enterprise branded equipment, software products, as well as HPE-supported products from other vendors that are sold by HPE or by HPE authorized resellers. The Installation Service is part of a suite of HPE deployment services that are designed to give users the peace of mind that comes from knowing that their HPE and HPE-supported products have been installed by an HPE specialist.

The HPE Installation Service provides the following benefits:

- Installation by an HPE authorized technical specialist.
- Verification prior to installation that all service prerequisites are met.
- Delivery of the service at a mutually scheduled time convenient to your organization.
- Allows your IT resources to stay focused on their core tasks and priorities.
- Full coverage during the warranty period for products that require installation by an HPE authorized technical specialist.

For more information on the features, limitations, provisions, and ordering information of the HPE Installation Service, see this Hewlett Packard Enterprise website:

https://www.hpe.com/support/installation-service

Setting up the server

Prerequisites

- As a best practice, Hewlett Packard Enterprise recommends installing the latest firmware, drivers, and system software before using the server for the first time. You have these options:
  - HPE GreenLake for Compute Ops Management is an advanced software-as-a-service platform that securely streamlines operations from edge-to-cloud and automates key life cycle tasks through a unified single browser-based interface. For more information on using HPE GreenLake for Compute Ops Management, see **https://www.hpe.com/info/com-docs**.
  - Use the **Firmware Update** option in Intelligent Provisioning—Intelligent Provisioning is a server deployment tool embedded in HPE ProLiant servers. To access Intelligent Provisioning, during the server boot process, press **F10**. For more information, see the Intelligent Provisioning user guide at **https://www.hpe.com/info/intelligentprovisioning/docs**.
  - Download the Service Pack for ProLiant (SPP)—SPP is a comprehensive system software and firmware update solution that is delivered as a single ISO image. This solution uses Smart Update Manager (SUM) as the deployment tool.
    - The preferred method for downloading an SPP is by creating an SPP custom download at **https://www.hpe.com/servers/spp/custom**.

      This option reduces the size of the SPP by excluding firmware and drivers for OS and server models that are not needed.
    - The SPP is also available for download from the SPP download page at **https://www.hpe.com/servers/spp/download**.
- Verify that your OS or virtualization software is supported: **https://www.hpe.com/support/Servers-Certification-Matrices**
- The embedded Intel Virtual RAID on CPU (Intel VROC) provides enterprise-level hybrid RAID support. Note the following information:
  - Intel VROC provides RAID support for direct attached SATA drives.
  - The VROC RAID volume must use drives of the same form factor.
  - Intel VROC requires the server boot mode to be set to **UEFI Mode**.
  - In the pre-OS environment, use UEFI System Utilities to enable Intel VROC and create a VROC RAID volume. This task is not supported in Intelligent Provisioning.
  - Intel VROC supports RAID management though the following tools:
    - Non-OS specific: UEFI System Utilities

- Windows: Intel VROC GUI, Intel VROC CLI
- Linux: `mdadm` CLI

For more information on Intel VROC features and configuration, see the OS-specific Intel VROC user guide:

https://www.hpe.com/support/IntelVROC-Gen10Plus-docs

- Read the Operational requirements for the server.
- Read the safety and compliance information: **https://www.hpe.com/support/safety-compliance-enterpriseproducts**
- Take note of the iLO hostname and default login credentials on the iLO information label on the bottom of the server.

Procedure

1. Unbox the server and verify the contents:
   - Server
   - Power cord and adapter
   - Antislip rubber strips (2)
   - Printed setup documentation

   The server does not ship with OS media. All system software and firmware is preloaded on the server.
2. (Optional) Install the hardware options.
3. Select the server orientation:
   - Position the server in a horizontal orientation.
   - Position the server in a vertical orientation.

   IMPORTANT:

   The iLO shared connectivity of the RJ45 port 1 is dependent on the presence of the iLO enablement module. If this optional module is not installed, use an in-band communication method for accessing iLO.
4. Connect the network cable:
   a. Connect one end of the network cable to the NIC port.

b. Connect the other end of the network cable to a network jack or a network device, such as router or LAN switch.

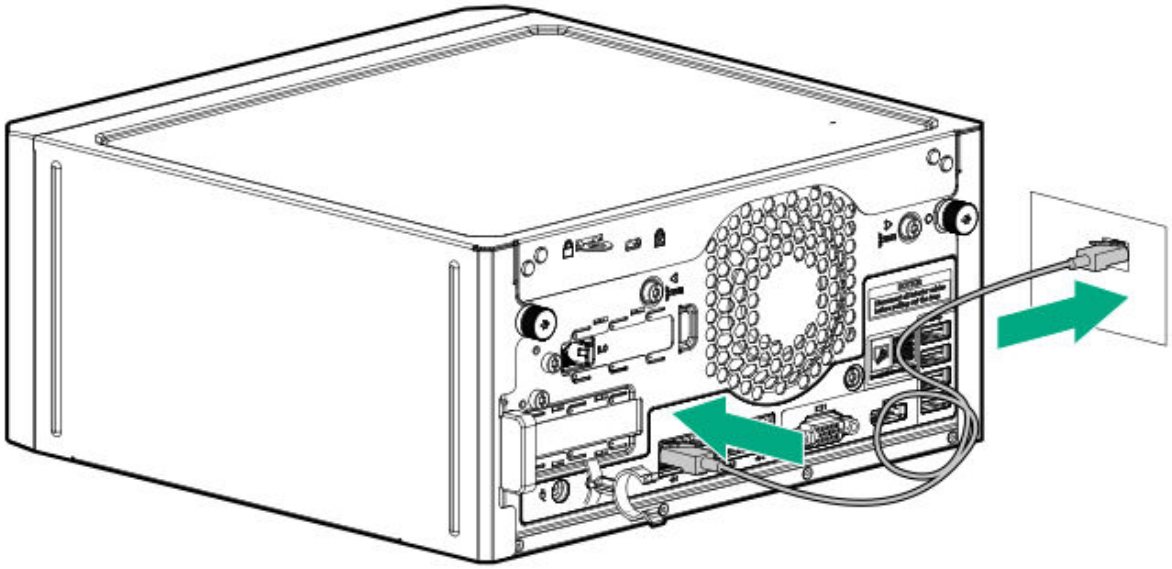

5. Connect the power cord:

   a. Connect the power adapter to the server power jack with the connector secured in the power cord clamp (callout 1).

   b. Connect the power cord to the adapter (callout 2).

   c. Connect the power cord to the AC power source (callout 3).

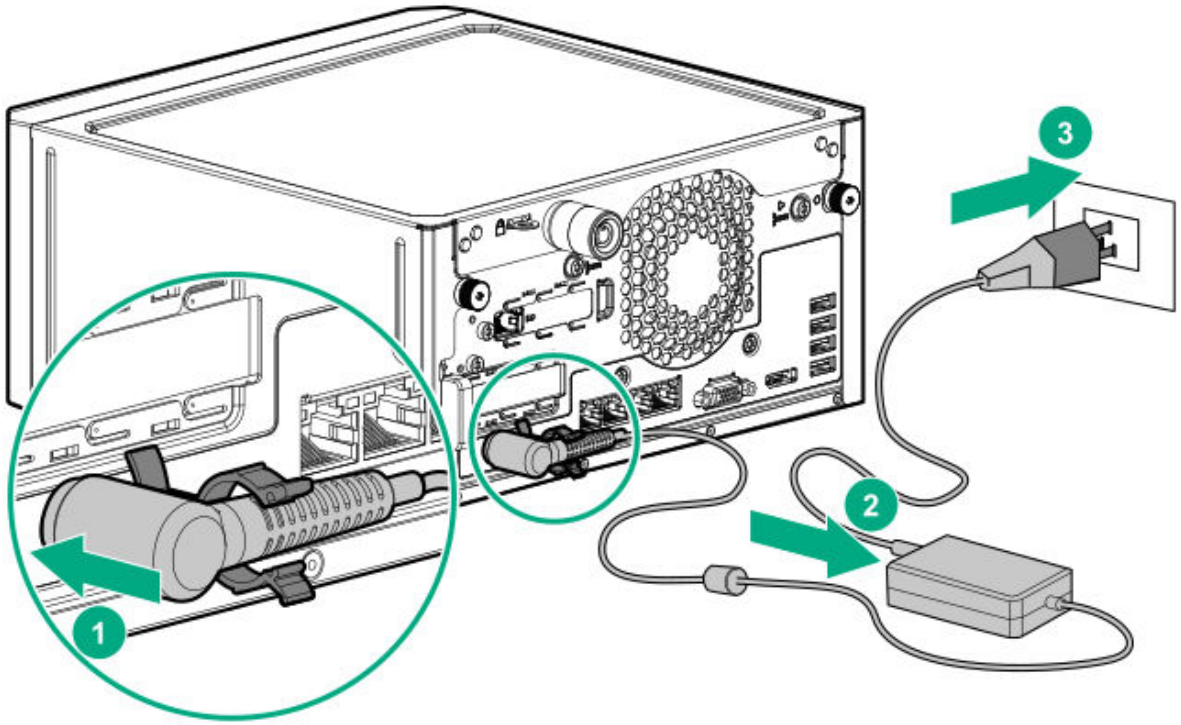

d. Close the power cord clamp until it clicks into place.

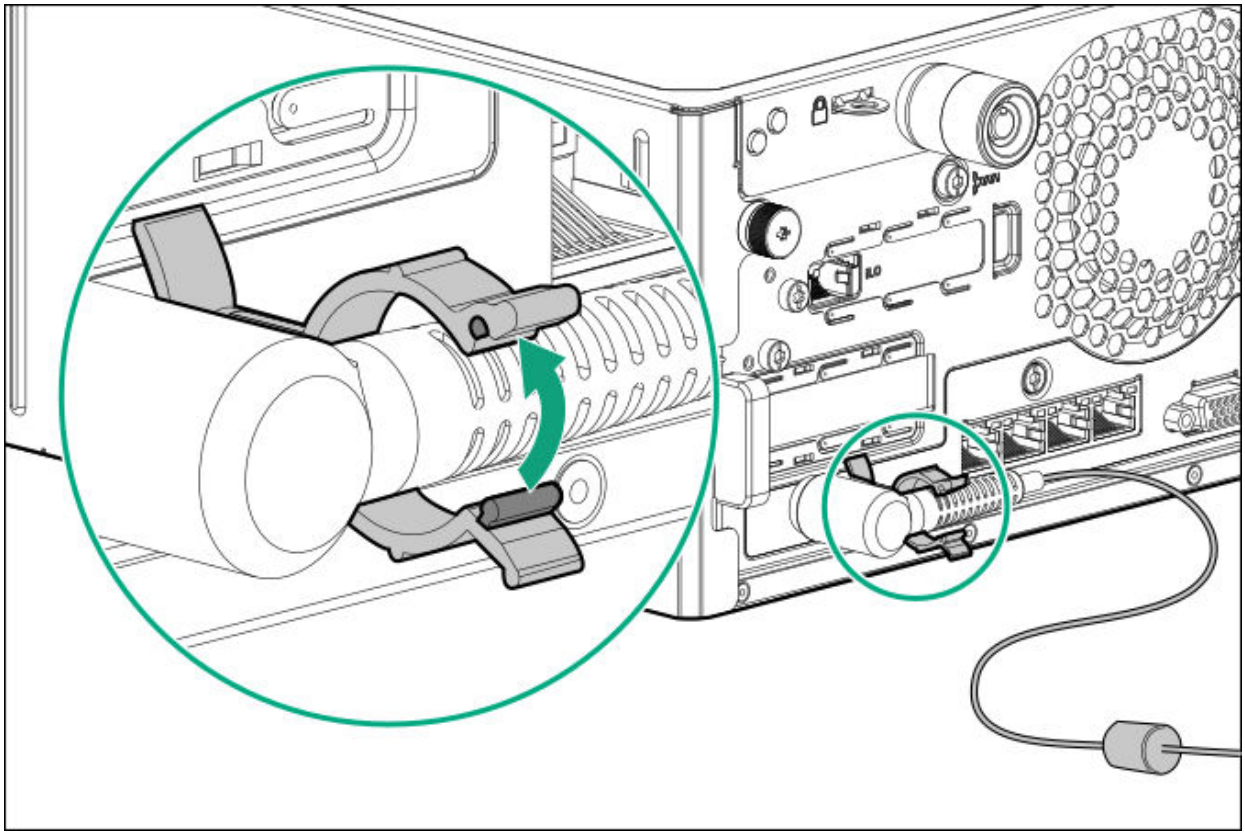

6. Decide how to manage the server:

   - Locally: Use a KVM switch or a connect a keyboard, monitor, and mouse.
     Before connecting a display device to the server, review the information for Display device setup.

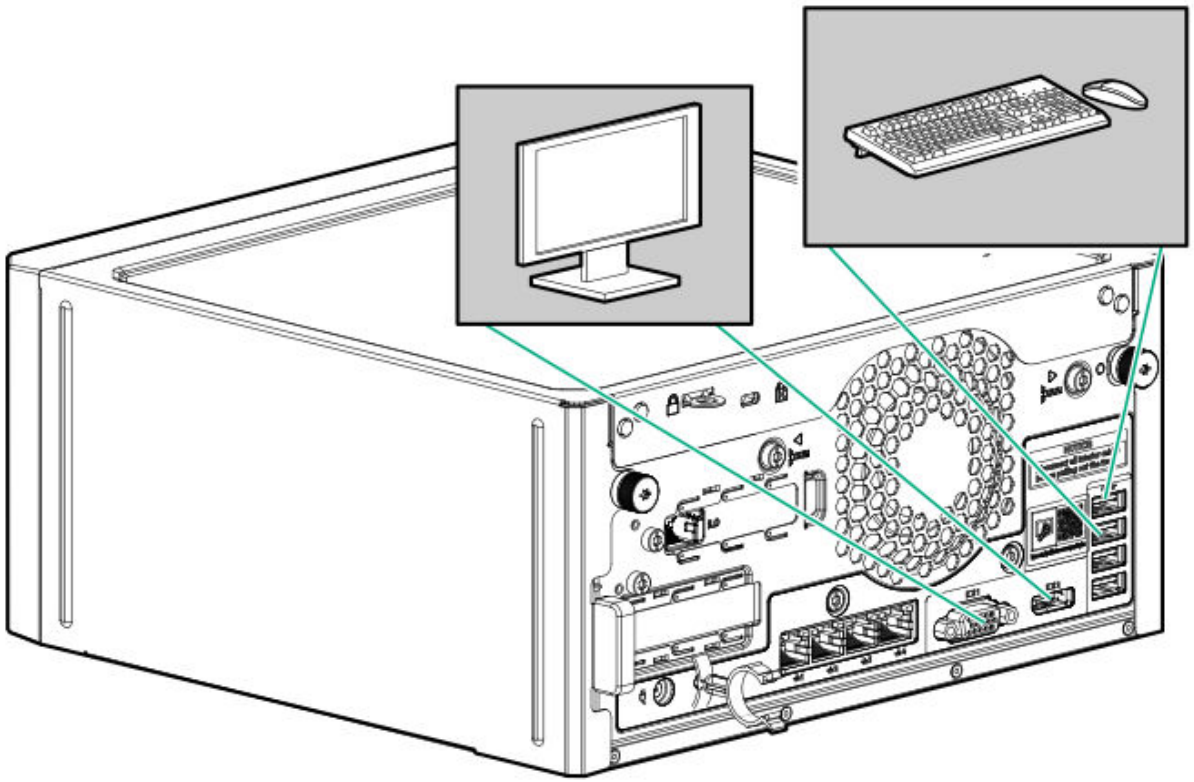

   - Remotely: Connect to the iLO web interface and run a remote console:

     a. Verify the following:

        - iLO is licensed to use the remote console feature.

          If iLO is not licensed, visit the HPE website:

          https://www.hpe.com/info/ilo

        - The iLO dedicated network port is connected to a secure network.

     b. Using a browser, navigate to the iLO web interface, and then log in.
        ```
        https://<iLO hostname or IP address>
        ```
        Note the following:

        - The iLO host name is on the serial number/iLO information pull tab on the front panel.
        - If a DHCP server assigns the IP address, the IP address appears on the boot screen.
        - If a static IP address is assigned, use that IP address.

- The default login credentials are on the serial number/iLO information pull tab on the front panel.

c. Enter the iLO login name and password, and then click **Log In**.

d. In the navigation tree, click the **Remote Console & Media** link, and then launch a remote console.

7. Press the Power On/Standby button. For remote management, use the iLO virtual power button.
8. Configure the initial server setup.
9. Set up the storage.
10. Deploy an OS or virtualization software.
11. After the OS is installed, update the drivers.

Server orientation options

The server can be oriented in a horizontal or vertical setup depending on the available space in the installation site.

Subtopics

Position the server in a horizontal orientation
Position the server in a vertical orientation

Position the server in a horizontal orientation

About this task

There are four antislip rubber pads preinstalled on the base of the server for a horizontal setup.

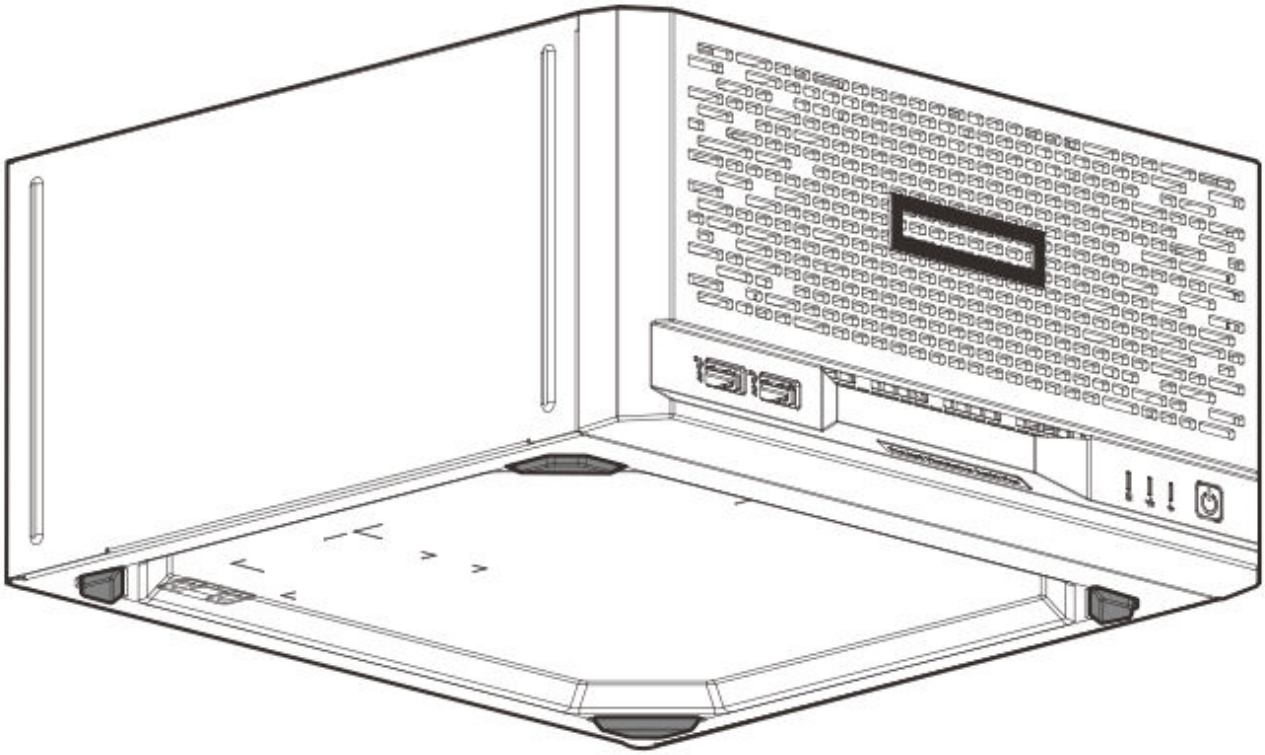

In a horizontal setup, you can stack up to three MicroServers on top of each other.



Position the server in a vertical orientation

Prerequisites

Before you perform this procedure, make sure that you have the following items available:

- Isopropyl alcohol wipe
- Antislip rubber strips

About this task

The server can be oriented vertically for a smaller footprint setup. There are two pairs of divots on both sides of the server for attaching the antislip rubber strips. Two antislip rubber strips are shipped with the server.

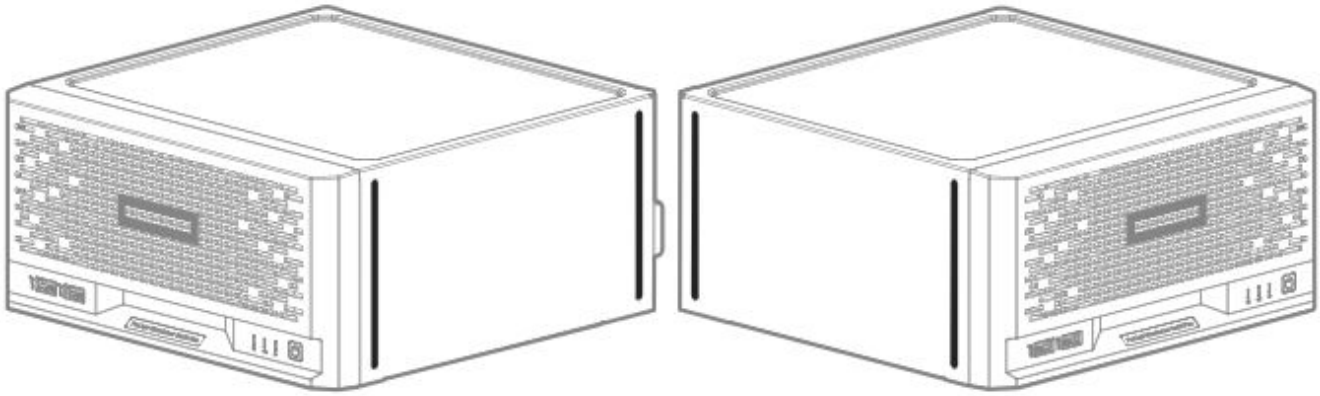

Procedure

1. Use an isopropyl alcohol wipe to clean the divots on the side of the server. Allow the alcohol to evaporate before continuing.
2. Peel off the protective liner from the rubber strips.
3. Attach the strips onto the divots. To ensure proper adhesion, press along the entire strip.

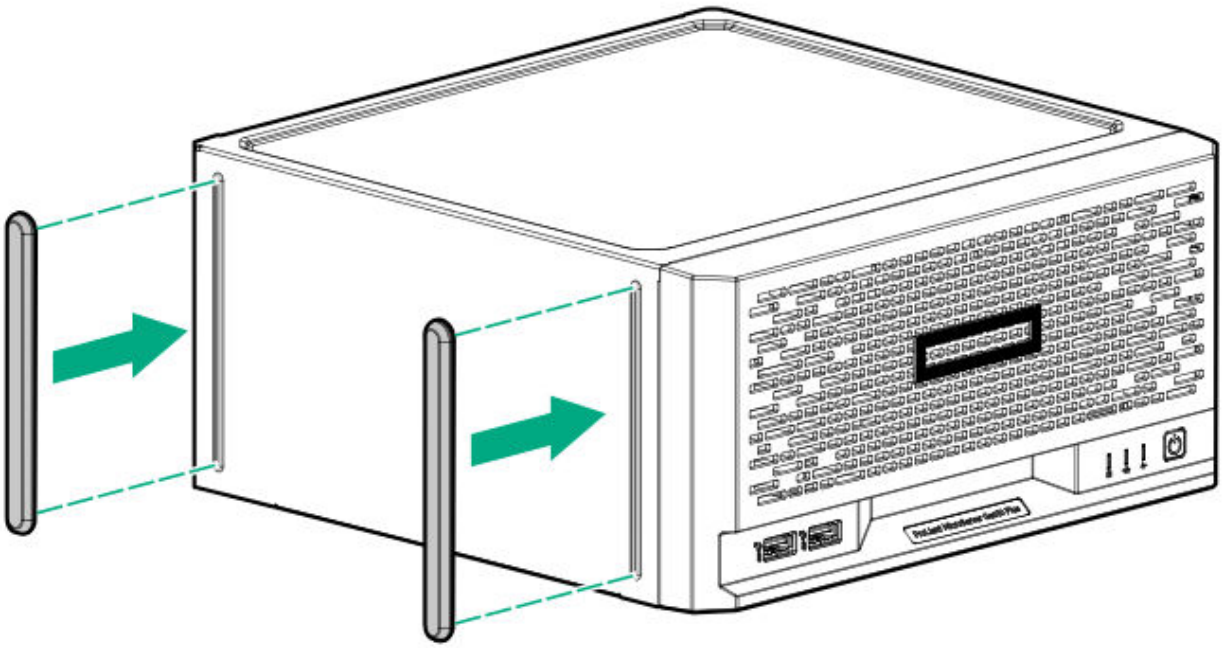

4. Position the server in a vertical orientation.

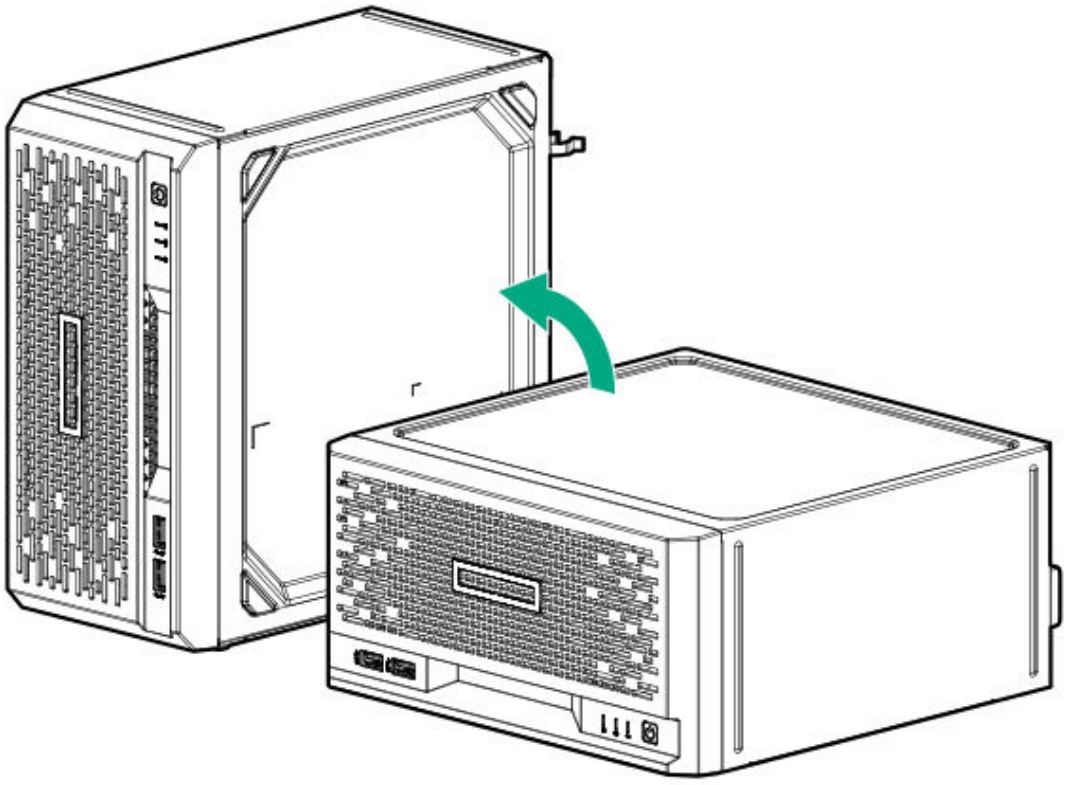

Operational requirements

When preparing the site and planning the installation for the HPE ProLiant MicroServer Gen10 Plus v2, be sure to observe the following general operational requirements:

- Space and airflow requirements
- Temperature requirements
- Power requirements
- Electrical grounding requirements

For server-specific environmental requirements, see Environmental specifications.

Subtopics

Site requirements
Space and airflow requirements
Temperature requirements
Power requirements
Electrical grounding requirements

Site requirements

The server may be located in an office space or a purpose-made equipment room. The location must:

- Comply with local health and safety regulations.
- Be clean, tidy, and free of excessive dust and vibration.
- Be in an area in which the server cannot easily be disconnected from its power source.
- Not be adjacent to or underneath any area or piece of equipment where liquid is stored.
- Not be in a place where the server might be bumped, scratched, or disturbed.
- Be within an area that is ideally locked or at minimum not accessible to unauthorized personnel.
- Be within patching distance, directly or via cable management cross-patches, of the location of the WAN connection and the switch that supplies the office/room floor network ports.

Space and airflow requirements

Leave at least a 10 cm (4 in) clearance space at the front and back of the server for proper ventilation.

CAUTION:

The server draws in cool air through the ventilation openings on the front side, and expels warm air through the ventilation openings on the rear side. Do not block these openings. Failure to observe this caution will result in improper airflow and insufficient cooling that can lead to thermal damage.

Temperature requirements

To ensure continued safe and reliable equipment operation, install or position the system in a well-ventilated, climate-controlled environment.

The maximum recommended ambient operating temperature (TMRA) for most server products is 35°C (95°F). The temperature in the room where the rack is located must not exceed 35°C (95°F).

CAUTION: To reduce the risk of damage to the equipment when installing third-party options:

- Do not permit optional equipment to impede airflow around the server or to increase the internal rack temperature beyond the maximum allowable limits.
- Do not exceed the manufacturer's TMRA.

Power requirements

Installation of this equipment must comply with local and regional electrical regulations governing the installation of information technology equipment by licensed electricians. This equipment is designed to operate in installations covered by NFPA 70, 1999 Edition (National Electric Code) and NFPA-75, 1992

(code for Protection of Electronic Computer/Data Processing Equipment). For electrical power ratings on options, refer to the product rating label or the user documentation supplied with that option.

WARNING: To reduce the risk of personal injury, fire, or damage to the equipment, do not overload the AC supply branch circuit that provides power to the rack. Consult the electrical authority having jurisdiction over wiring and installation requirements of your facility.

CAUTION: Protect the server from power fluctuations and temporary interruptions with a regulating uninterruptible power supply. This device protects the hardware from damage caused by power surges and voltage spikes and keeps the system in operation during a power failure.

Electrical grounding requirements

The server must be grounded properly for proper operation and safety. In the United States, you must install the equipment in accordance with NFPA 70, National Electric Code Article 250, as well as any local and regional building codes. In Canada, you must install the equipment in accordance with Canadian Standards Association, CSA C22.1, Canadian Electrical Code. In all other countries, you must install the equipment in accordance with any regional or national electrical wiring codes, such as the International Electrotechnical Commission (IEC) Code 364, parts 1 through 7. Furthermore, you must be sure that all power distribution devices used in the installation, such as branch wiring and receptacles, are listed or certified grounding-type devices.

Because of the high ground-leakage currents associated with multiple servers connected to the same power source, Hewlett Packard Enterprise recommends the use of a PDU that is either permanently wired to the building's branch circuit or includes a nondetachable cord that is wired to an industrial-style plug. NEMA locking-style plugs or those complying with IEC 60309 are considered suitable for this purpose. Using common power outlet strips for the server is not recommended.

Server warnings and cautions

WARNING:

To reduce the risk of personal injury, electric shock, or damage to the equipment, disconnect the power cord to remove power from the server. Pressing the Power On/Standby button does not shut off system power completely. Portions of the power supply and some internal circuitry remain active until AC power is removed.

WARNING: To reduce the risk of personal injury from hot surfaces, allow the drives and the internal system components to cool before touching them.

CAUTION:

Protect the server from power fluctuations and temporary interruptions with a regulating UPS. This device protects the hardware from damage caused by power surges and voltage spikes and keeps the server in operation during a power failure.

CAUTION:

To prevent improper airflow and insufficient cooling that can lead to thermal damage, observe the following:

- Do not operate the server with the front bezel or chassis cover removed.
- Periodically clean the dust filter on the inner surface of the front bezel.

CAUTION: To prevent damage to electrical components, properly ground the server before beginning any installation procedure. Improper grounding can cause electrostatic discharge.

CAUTION:

To avoid data loss, Hewlett Packard Enterprise recommends that you back up all server data before installing or removing a hardware option, or performing a server maintenance or troubleshooting procedure.

Electrostatic discharge

Be aware of the precautions you must follow when setting up the system or handling components. A discharge of static electricity from a finger or other conductor may damage system boards or other static-sensitive devices. This type of damage may reduce the life expectancy of the system or component.

To prevent electrostatic damage:

- Avoid hand contact by transporting and storing products in static-safe containers.
- Keep electrostatic-sensitive parts in their containers until they arrive at static-free workstations.
- Place parts on a grounded surface before removing them from their containers.
- Avoid touching pins, leads, or circuitry.
- Always be properly grounded when touching a static-sensitive component or assembly. Use one or more of the following methods when handling or installing electrostatic-sensitive parts:
    - Use a wrist strap connected by a ground cord to a grounded workstation or computer chassis. Wrist straps are flexible straps with a minimum of 1 megohm ±10 percent resistance in the ground cords. To provide proper ground, wear the strap snug against the skin.
    - Use heel straps, toe straps, or boot straps at standing workstations. Wear the straps on both feet when standing on conductive floors or dissipating floor mats.
    - Use conductive field service tools.
    - Use a portable field service kit with a folding static-dissipating work mat.

  If you do not have any of the suggested equipment for proper grounding, have an authorized reseller install the part.

For more information on static electricity or assistance with product installation, contact an authorized reseller.

Operations

This chapter describes the hardware operations carried out prior to and after installing or removing a hardware component, or performing a server maintenance or troubleshooting procedure.

Before performing these hardware operations, review and observe the server warnings and cautions.

Subtopics

Power down the server
Removing the front bezel

Removing the chassis cover
Removing the system board assembly
Installing the system board assembly
Installing the chassis cover
Installing the front bezel
Power up the server

Power down the server

Before powering down the server for any upgrade or maintenance procedures, perform a backup of critical server data and programs.

> **IMPORTANT:**
> When the server is in standby mode, auxiliary power is still being provided to the system.

To power down the server, use one of the following methods:

- Press and release the Power On/Standby button.
  This method activates a controlled shutdown of applications and the OS before the server enters standby mode. It can also activate a shutdown behavior governed by an OS configuration or policy.
- Press and hold the Power On/Standby button for more than 4 seconds to force the server to enter standby mode.
  This method forces the server to enter standby mode without properly exiting applications and the OS. If an application stops responding, you can use this method to force a shutdown.
- Use a virtual power button selection through iLO 5.
  This method initiates a controlled remote shutdown of applications and the OS before the server enters standby mode.

Before proceeding, verify that the server is in standby mode by observing that the system power LED is amber.

Removing the front bezel

About this task

To access the drive bays, remove the front bezel.

Procedure

1. Power down the server.
2. Disconnect the power cord from the AC source.
3. Remove the power adapter cord from the power cord clamp, and then disconnect the power adapter from the server.
4. Disconnect all peripheral cables from the server.
5. If the server is in a vertical orientation, position the server in a horizontal orientation.

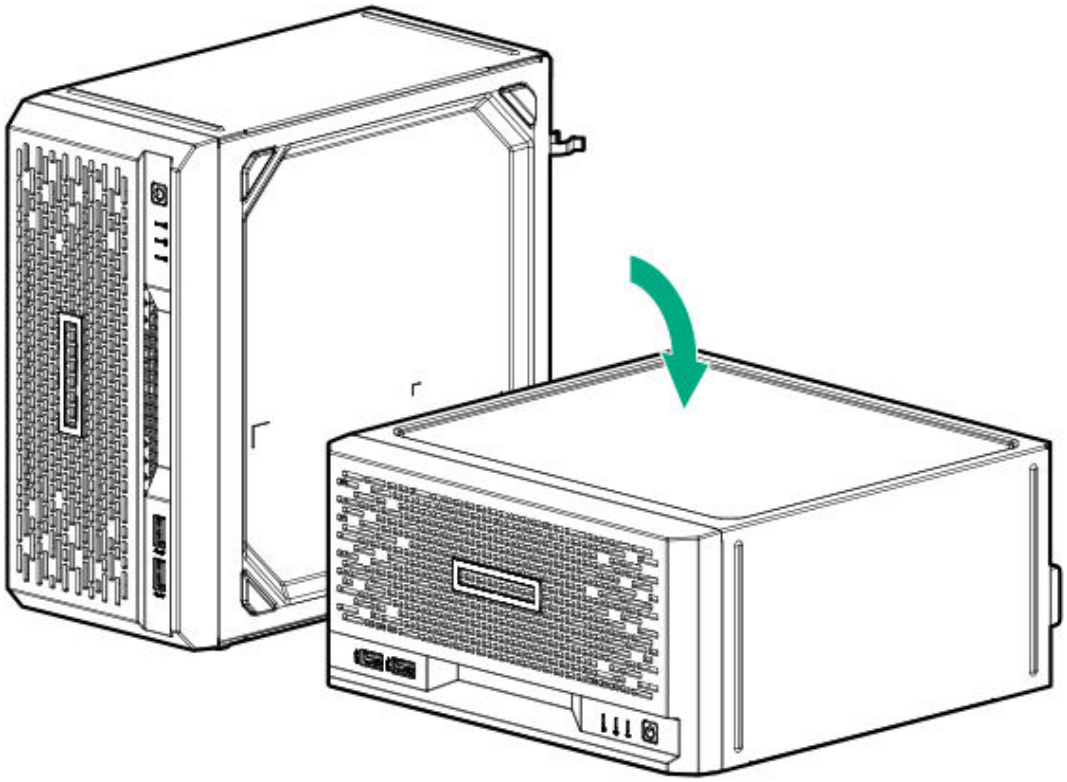

6. If the front bezel is locked, do the following:
   a. Remove the chassis cover.
   b. Switch the bezel locks upward.

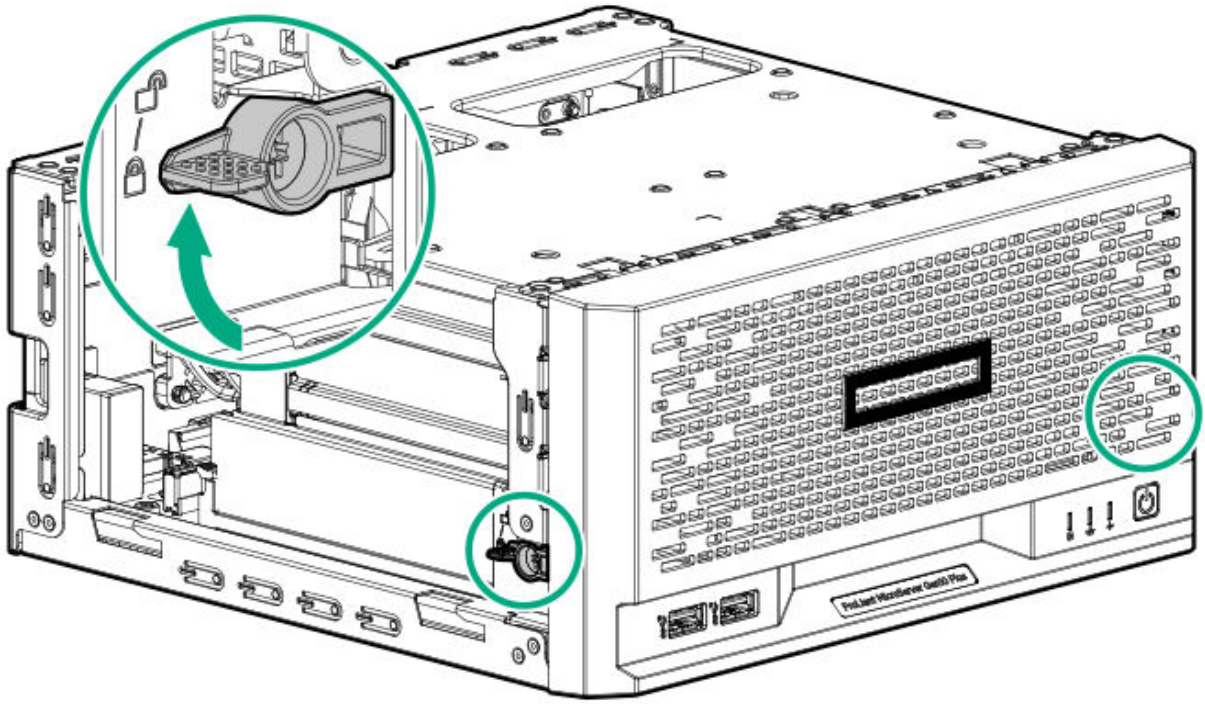

7. To remove an unlocked front bezel, do the following:

   a. Pivot the bottom part of the bezel upward (callout 1).

   b. Release the bezel tabs from their chassis openings (callout 2).

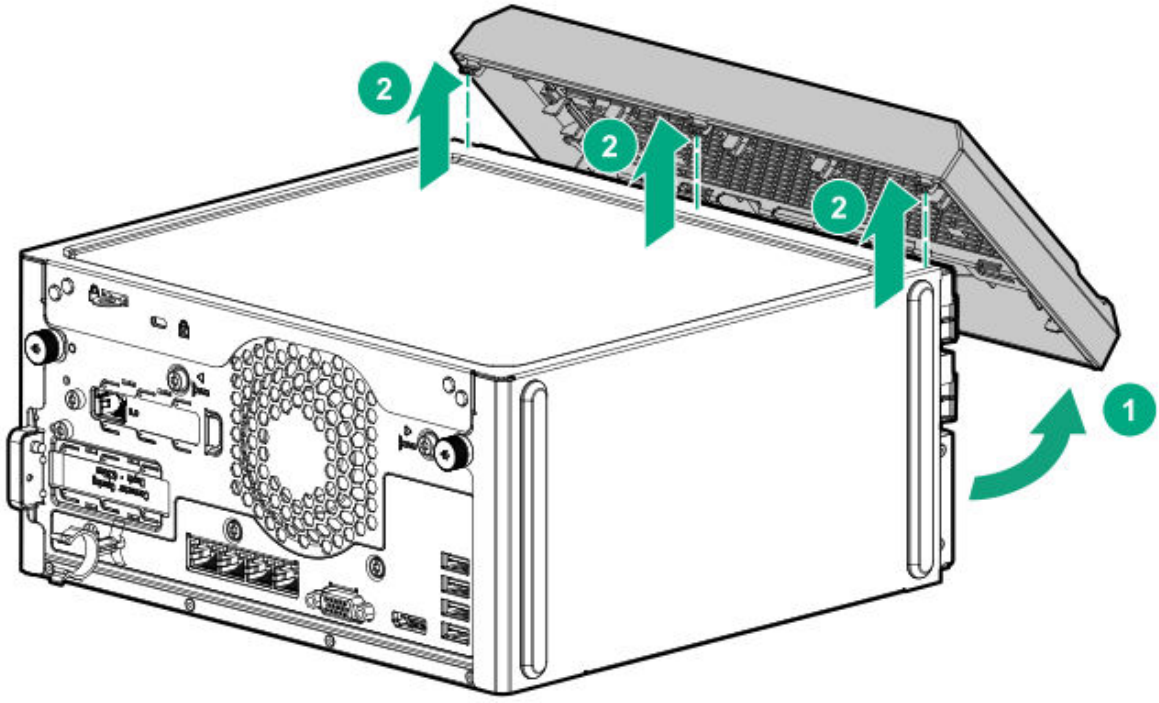

Removing the chassis cover

About this task

To access the front bezel locks, remove the chassis cover.

Procedure

1. Power down the server.
2. Disconnect the power cord from the AC source.
3. Remove the power adapter cord from the power cord clamp, and then disconnect the power adapter from the server.
4. Disconnect all peripheral cables from the server.
5. If installed, unlock and remove the security padlock and/or the Kensington security lock.

   For more information, see the lock documentation.
6. If the server is in a vertical orientation, position the server in a horizontal orientation.

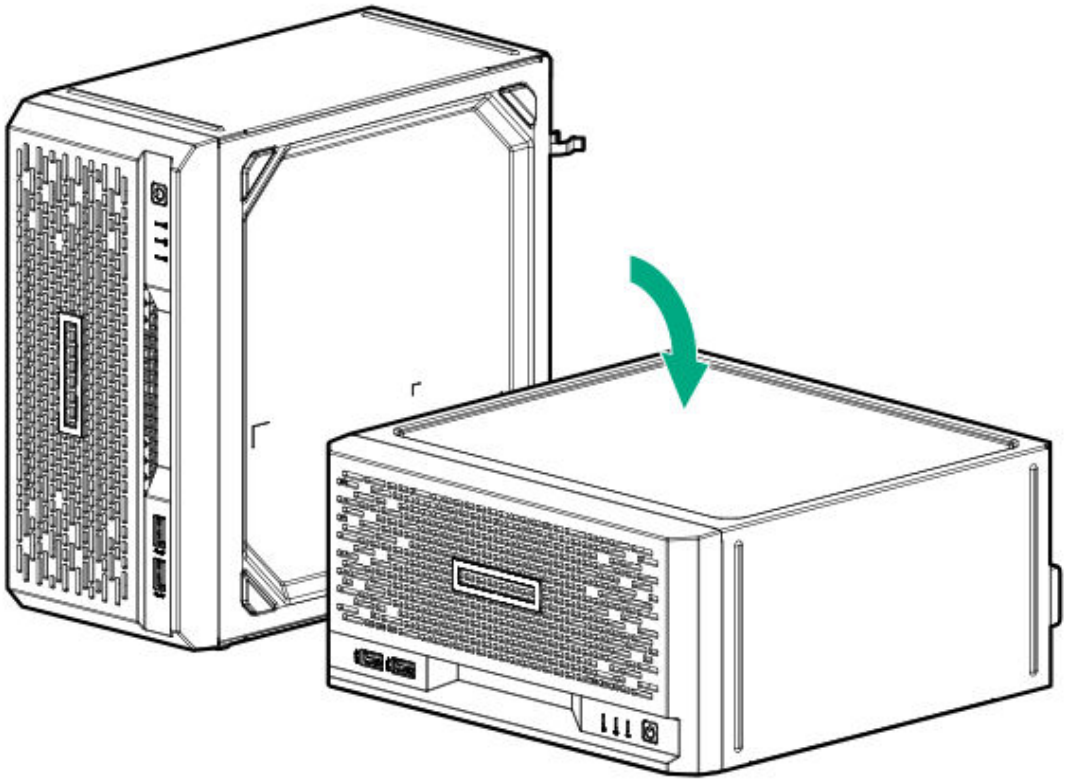

7. Remove the chassis cover:

   a. Remove the cover thumbscrews.

      If the thumbscrews are too tight, use a T-15 Torx screwdriver to remove them (callout 1).

   b. Slide the cover about half an inch towards the rear panel until the arrowhead markers on the front edge of the chassis are exposed, and then detach the cover from the server (callout 2).

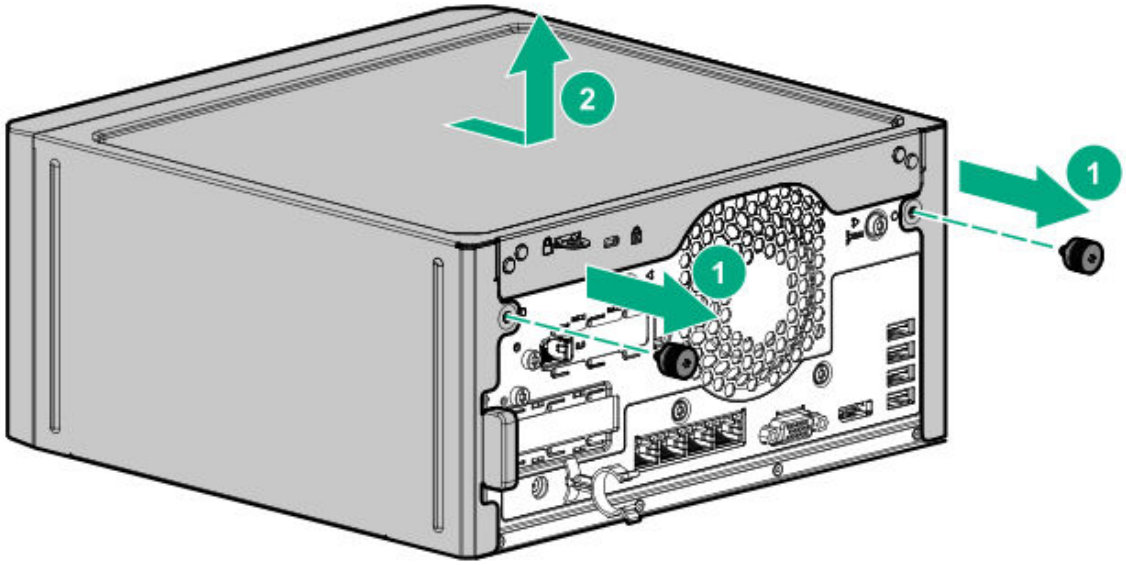

Removing the system board assembly

Prerequisites

Before you perform this procedure, make sure that you have a T-15 Torx screwdriver available.

About this task

To access most internal components, remove the system board assembly.

Procedure

1. Power down the server.
2. Disconnect the power cord from the AC source.
3. Remove the power adapter cord from the power cord clamp, and then disconnect the power adapter from the server.

4. Disconnect all peripheral cables from the server.
5. If the server is in a vertical orientation, position the server in a horizontal orientation.

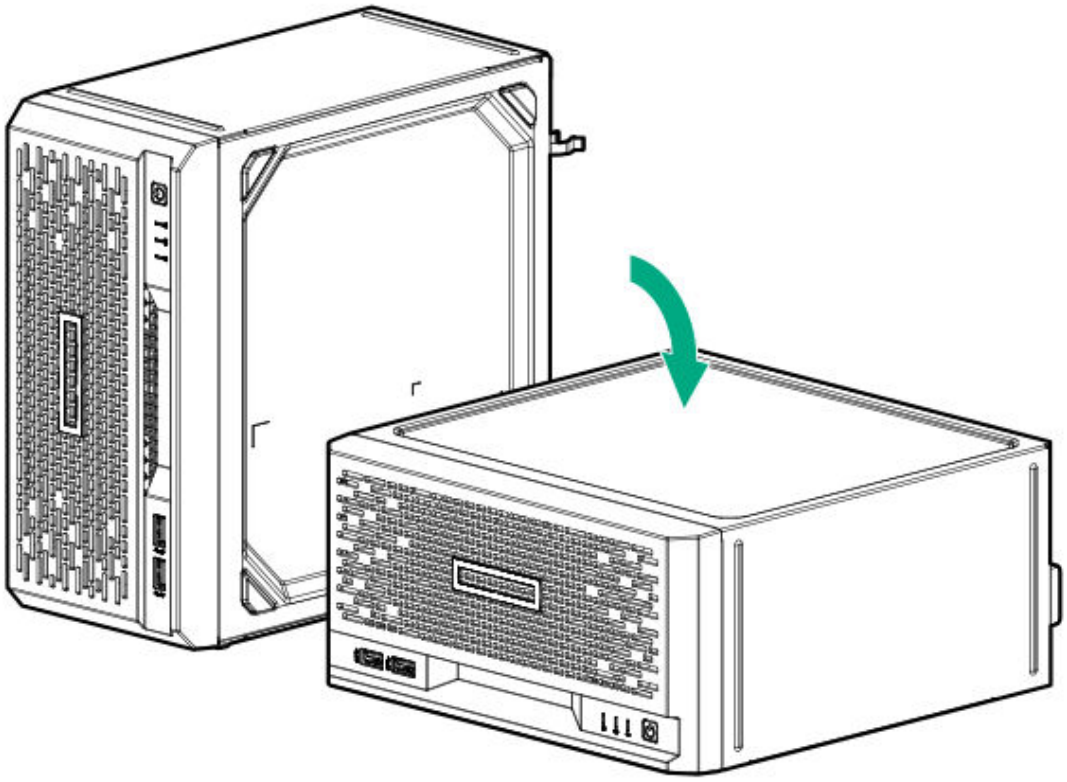

6. Remove the chassis cover.
7. If a tall internal USB device is installed, remove the device.

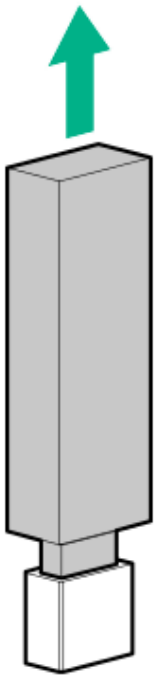

8. Remove the system board tray screws.

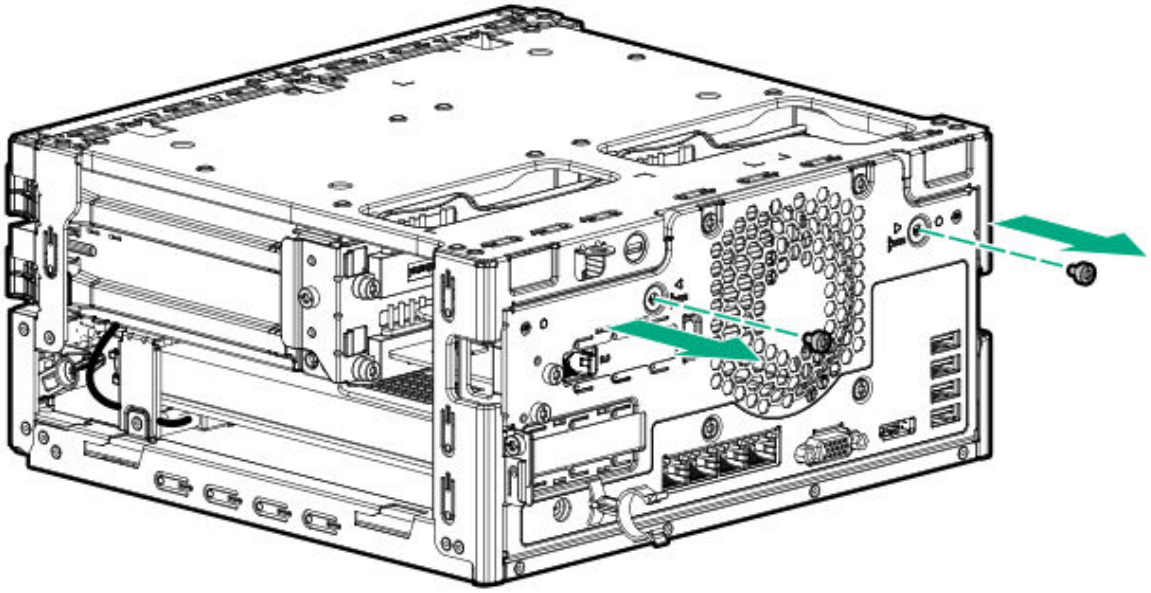

IMPORTANT:

The storage cables connect the system board to the chassis. If you are completely separating the system board assembly from the chassis, disconnect the storage cabling.

9. Use the blue touchpoints on both sides of the tray to pull out the system board assembly from the chassis.

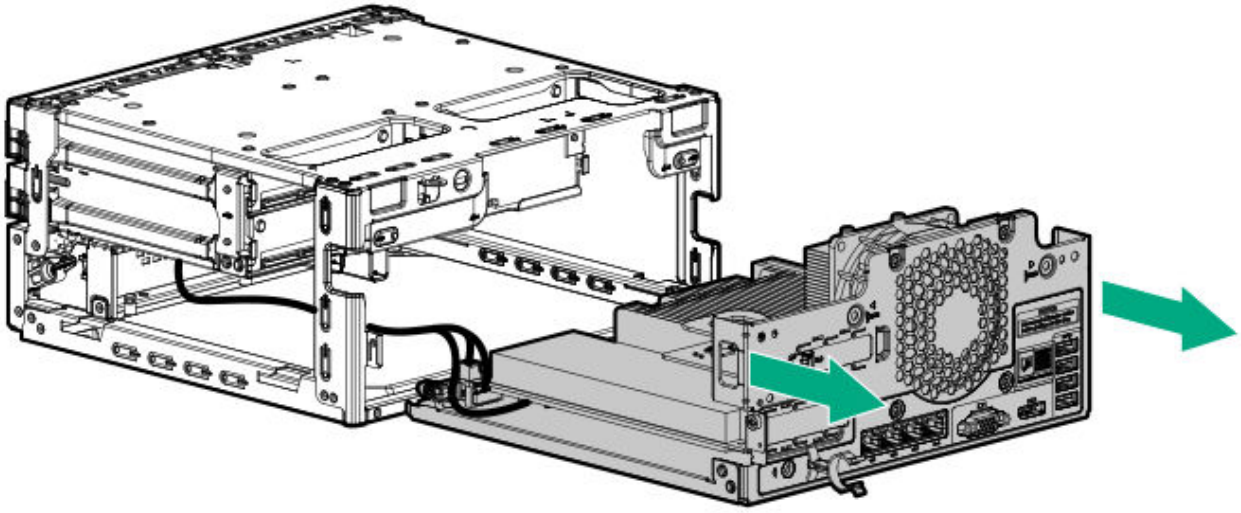

Installing the system board assembly

Prerequisites

Before you perform this procedure, make sure that you have a T-15 Torx screwdriver available.

Procedure

1. If the storage cables were removed, reconnect the cables.
2. Install the system board assembly:
   a. Slide the system board assembly into the chassis (callout 1).
   b. Install the system board assembly screws (callout 2).

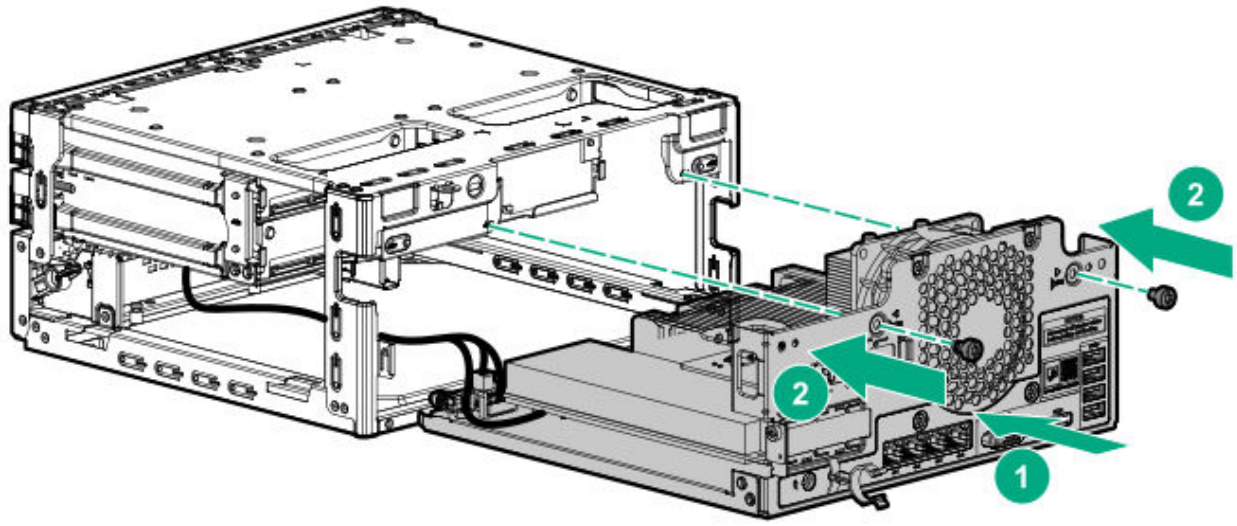

3. If removed, install the internal USB device.

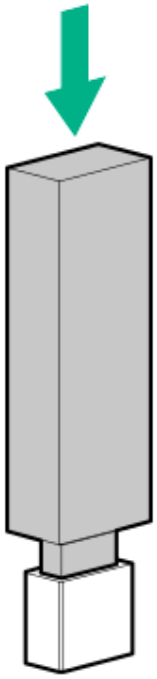

4. Install the chassis cover.
5. If removed, install the security padlock and/or the Kensington security lock.

   For more information, see the lock documentation.
6. Connect all peripheral cables to the server.

7. Connect the power adapter to the server, and then secure the power adapter cord in the power cord clamp.
8. Connect the power cord to the AC source.
9. Power up the server.

Installing the chassis cover

Procedure

1. Install the chassis cover:
   a. Insert the cover tabs to their chassis openings. Make sure that the cover is flushed against the top of the chassis.

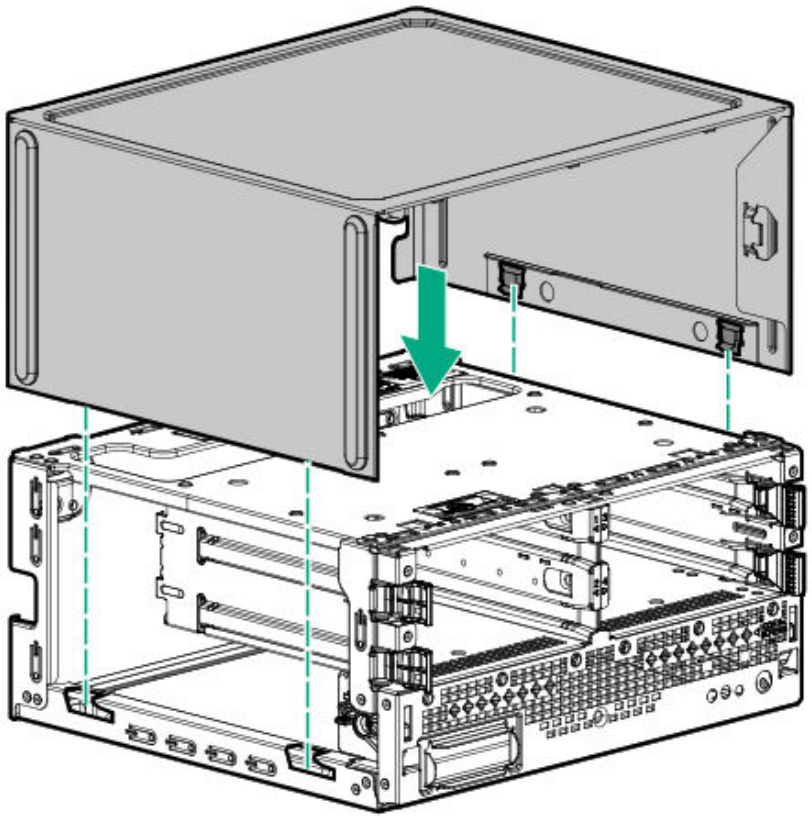

   b. Slide the chassis cover towards the front panel (callout 1), and then install the chassis thumbscrews (callout 2).

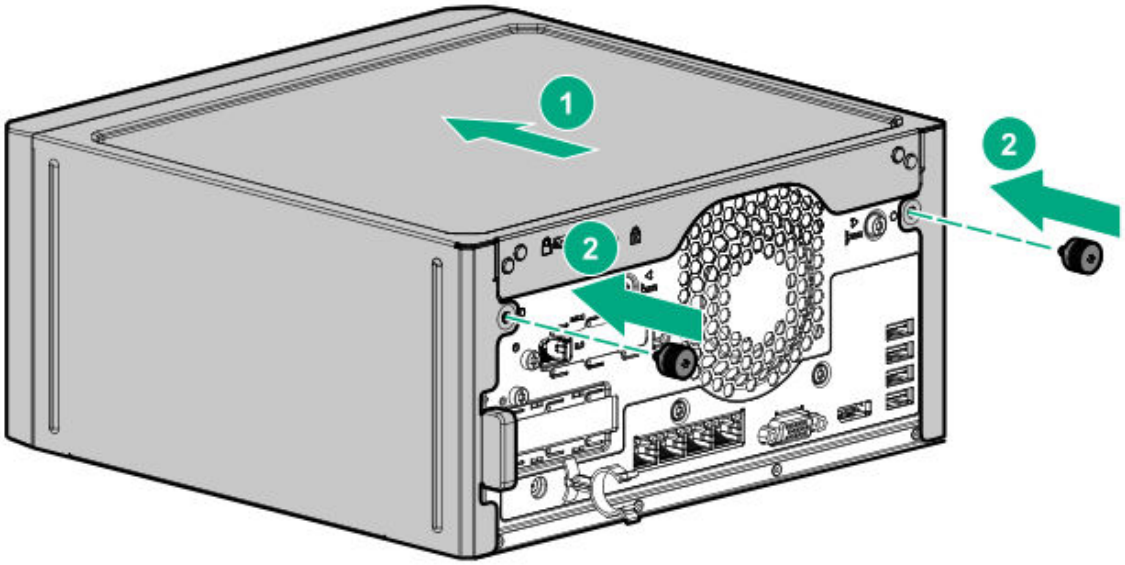

2. If removed, install the security padlock and/or the Kensington security lock.

   For more information, see the lock documentation.

3. Connect all peripheral cables to the server.
4. Connect the power adapter to the server, and then secure the power adapter cord in the power cord clamp.
5. Connect the power cord to the AC source.
6. Power up the server.

Installing the front bezel

Procedure

1. Make sure that the bezel locks are in the unlocked position.

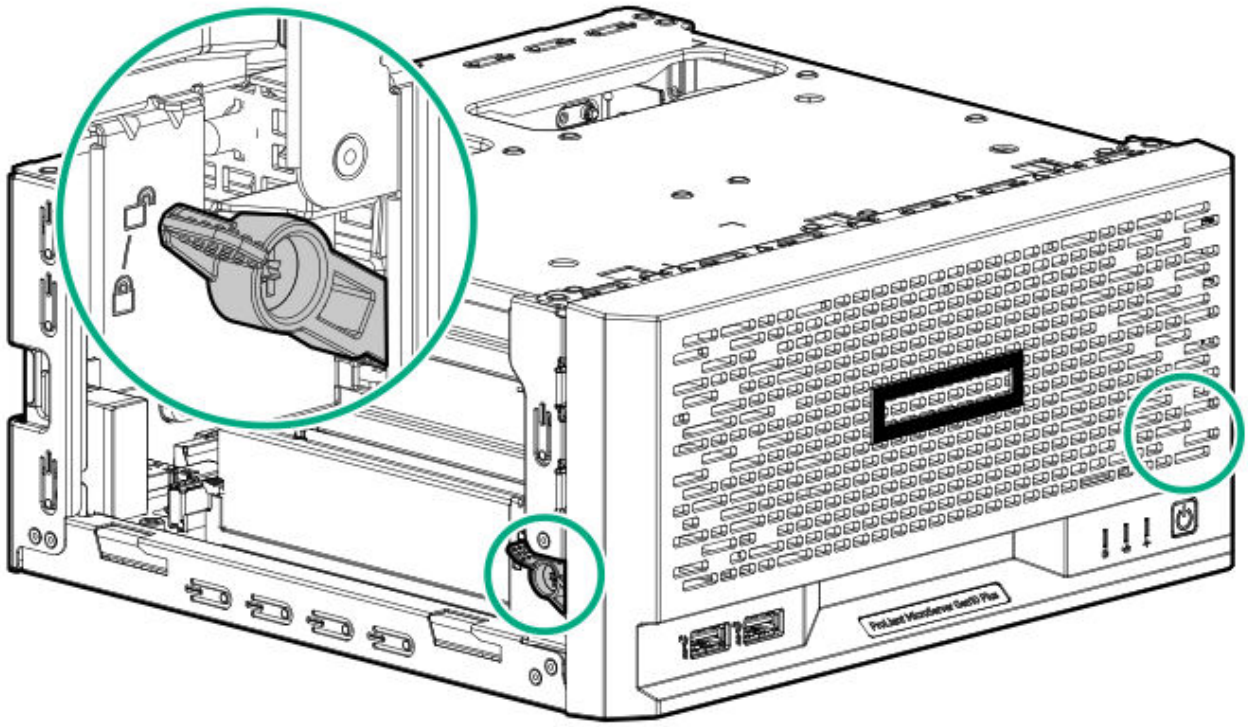

2. Install the front bezel:

   a. Insert the bezel tabs to their chassis openings (callout 1).

   b. Pivot the bottom part of the bezel downward (callout 2).

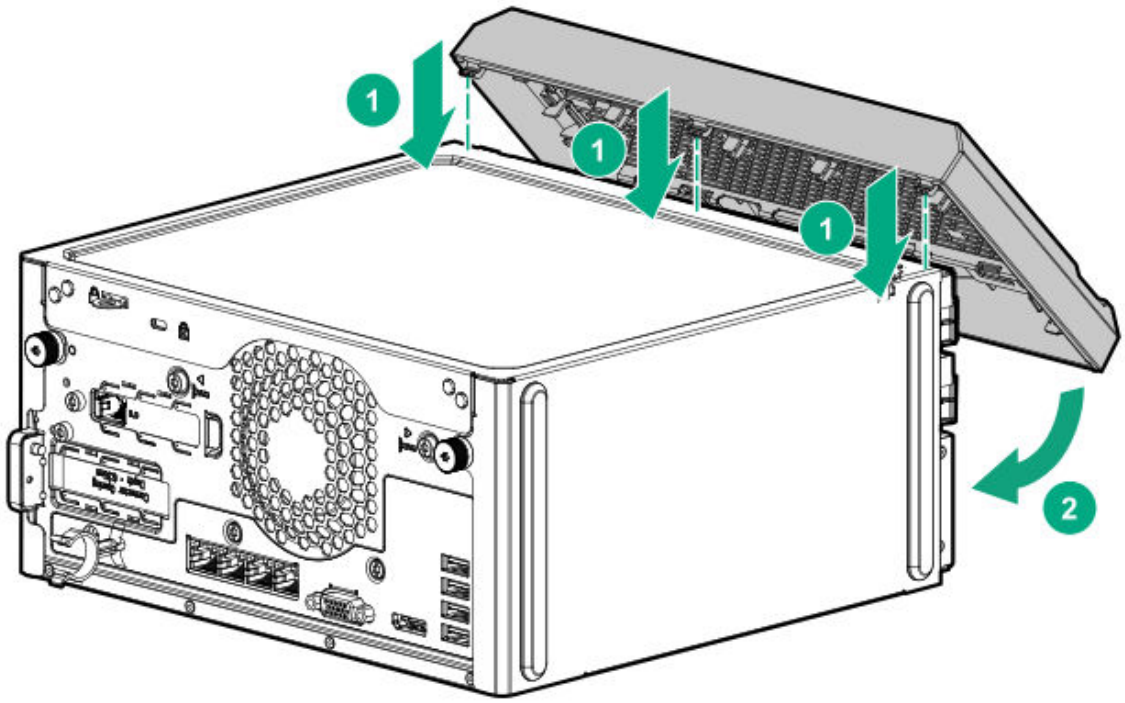

3. If you prefer to secure the bezel to the chassis, switch the bezel locks downward.

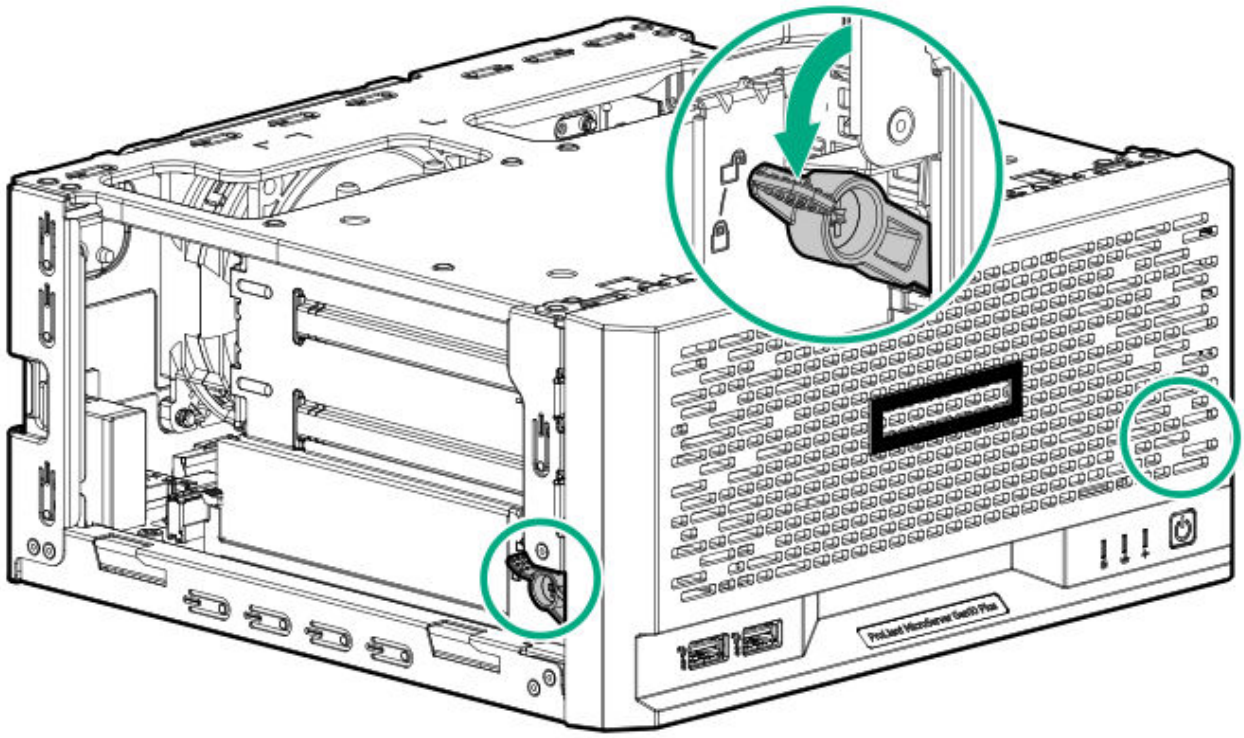

4. If removed, install the chassis cover.
5. If removed, install the security padlock and/or the Kensington security lock.

   For more information, see the lock documentation.
6. Connect all peripheral cables to the server.
7. Connect the power adapter to the server, and then secure the power adapter cord in the power cord clamp.
8. Connect the power cord to the AC source.
9. Power up the server.

Power up the server

About this task

To power up the server, use one of the following methods:

- Press the Power On/Standby button.
- Use the virtual power button through iLO 5.

Hardware options installation

This chapter provides instructions for installing supported hardware options. To ensure proper server deployment and operation, Hewlett Packard Enterprise recommends installing only HPE-validated hardware options. To see the list of validated options for this server, see the product QuickSpecs on the HPE ProLiant MicroServer Gen10 Plus v2 website:

https://www.hpe.com/servers/microserver-gen10-plus-v2

To view the warranty for your server and supported options, see Warranty information.

Subtopics

Server data backup
Hardware option installation guidelines
Drive support information
Memory option
Storage controller options
Expansion card options
Internal USB device option
External HPE RDX Backup System option
iLO enablement option

Server data backup

To avoid data loss, make sure to back up all server data before installing or removing a hardware option, performing a server maintenance, or a troubleshooting procedure.

Server data in this context refers to information that may be required to return the system to a normal operating environment after completing a hardware maintenance or troubleshooting procedure. This information may include:

- User data files
- User account names and passwords
- Application settings and passwords
- Component drivers and firmware

- TPM recovery key/password
- BIOS configuration settings—Use the backup and restore function in UEFI System Utilities. For more information, see the UEFI user guide (**https://www.hpe.com/info/UEFI-manuals**).
  - Custom default system settings
  - Security passwords including those required for power-on and BIOS admin access, persistent memory, and Server Configuration Lock (for HPE Trusted Supply Chain servers)
  - Server serial number and the product ID
- iLO-related data—Use the iLO backup and restore function. For more information, see the iLO user guide (**https://www.hpe.com/support/ilo5**).
  - iLO license
  - Customer iLO user name, password, and DNS name
  - iLO configuration settings
- For servers managed by HPE GreenLake for Compute Ops Management, make sure that you have your HPE GreenLake account ID. For more information, see **HPE GreenLake for Compute Ops Management Getting Started Guide**.

Hardware option installation guidelines

WARNING: To reduce the risk of personal injury from hot surfaces, allow the drives and the internal system components to cool before touching them.

CAUTION:

To avoid data loss, Hewlett Packard Enterprise recommends that you back up all server data before installing or removing a hardware option, or performing a server maintenance or troubleshooting procedure.

CAUTION:

To prevent damage to electrical components, properly ground the server before beginning any installation, removal, or replacement procedure. Improper grounding can cause electrostatic discharge.

- Install any hardware options before initializing the server.

- If multiple options are being installed, read the installation instructions for all the hardware options to identify similar steps and streamline the installation process.
- If the hardware option installation involves internal cabling, review the Cabling guidelines.

Drive support information

This server has four drive bays that support:

- Non-hot-plug LFF SATA hard drives
- Non-hot-plug SFF SATA hard drives and solid-state drives (SSD)

  SFF drive configurations require the LFF-to-SFF drive converter option.
- The embedded Intel Virtual RAID on CPU (Intel VROC) supports software RAID for direct attached SATA drives
- Install an HPE type-p PCIe plug-in storage controller option to support hardware RAID.

Subtopics

Drive installation guidelines
Installing an LFF drive
Installing an SFF drive

Drive installation guidelines

- Populate drive bays based on the drive numbering sequence. Start from the drive bay with the lowest device number.
- All drives grouped into the same drive array must meet the following criteria:
  - They must be either all hard drives or all solid-state drives.
  - Drives should be the same capacity to provide the greatest storage space efficiency when drives are grouped together into the same drive array.
- The system automatically sets all device numbers.

Installing an LFF drive

Prerequisites

> **CAUTION:** A discharge of static electricity from a finger or other conductor might damage system boards or other static-sensitive devices. To prevent damage, observe antistatic precautions.

- Before you perform this procedure, review the Drive installation guidelines.
- Before you perform this procedure, make sure that you have a T-15 Torx screwdriver available.

About this task

The LFF drives supported in this server do not require a drive caddy or a drive carrier to install. You only have to use the drive mounting screws on the chassis.

Procedure

1. Power down the server.
2. Disconnect the power cord from the AC source.
3. Remove the power adapter cord from the power cord clamp, and then disconnect the power adapter from the server.
4. Disconnect all peripheral cables from the server.
5. If installed, unlock and remove the security padlock and/or the Kensington security lock.

   For more information, see the lock documentation.
6. If the server is in a vertical orientation, position the server in a horizontal orientation.

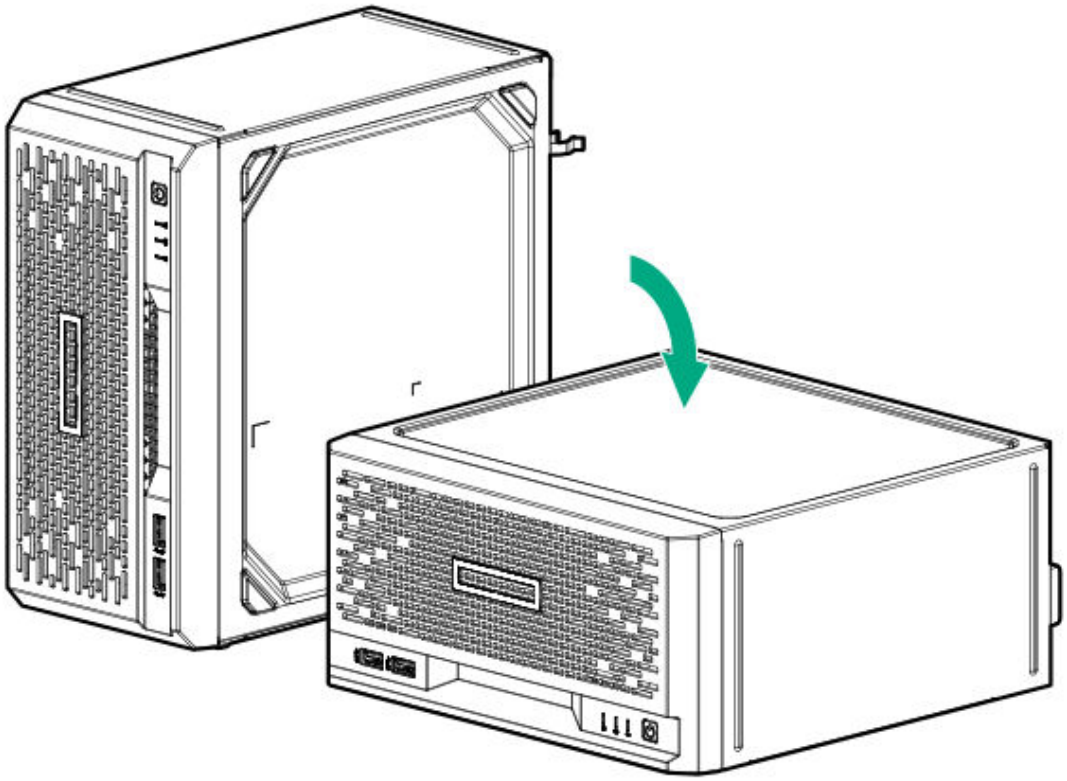

7. Remove the front bezel.
8. Remove four drive screws from the front panel.

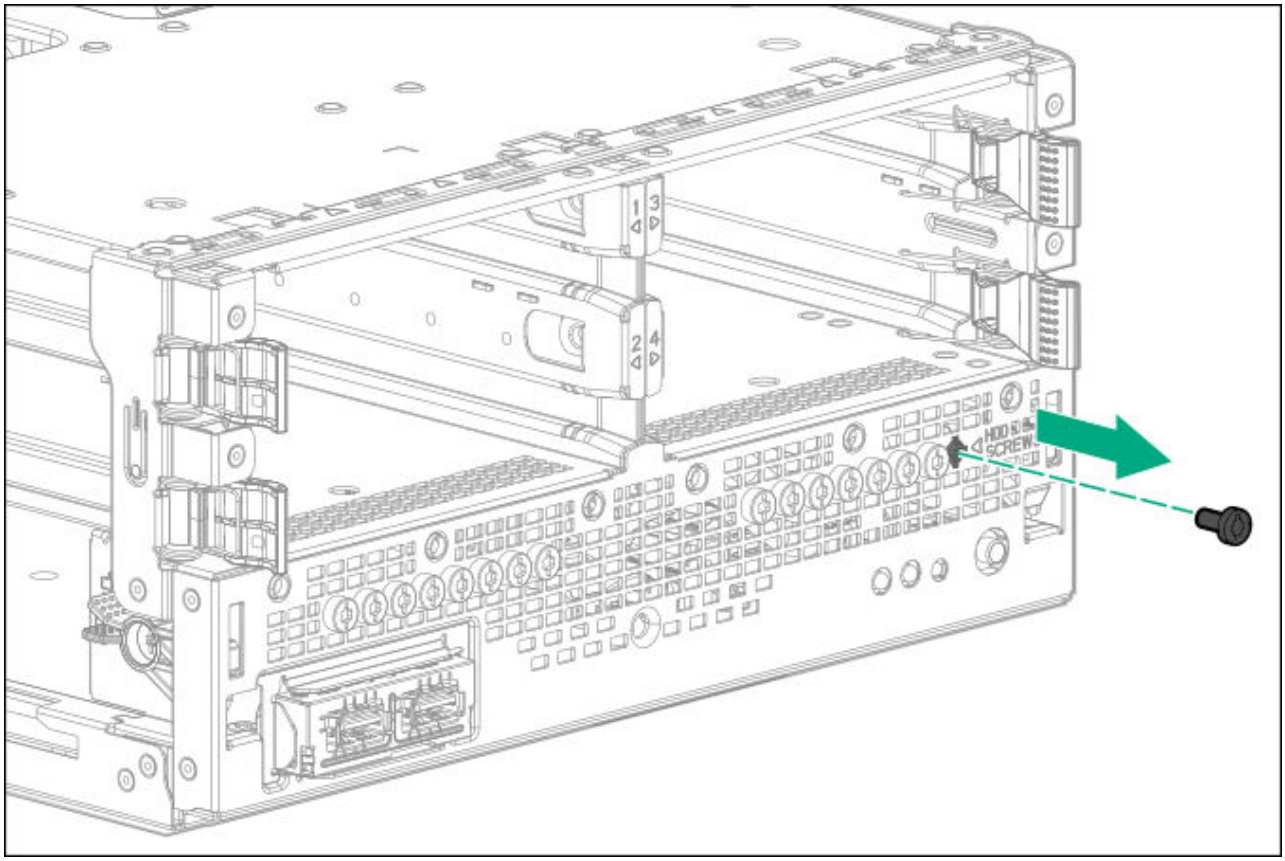

9. Install the screws in the drive.

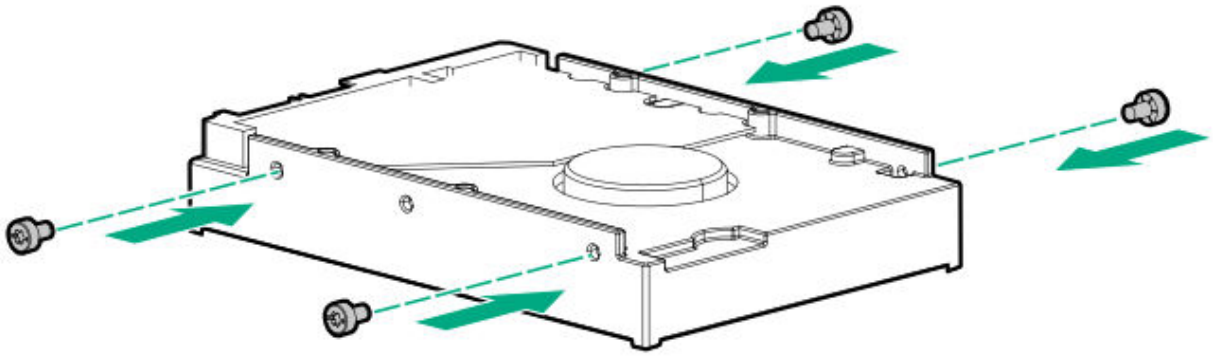

.0. Slide the drive into the bay until it clicks into place.

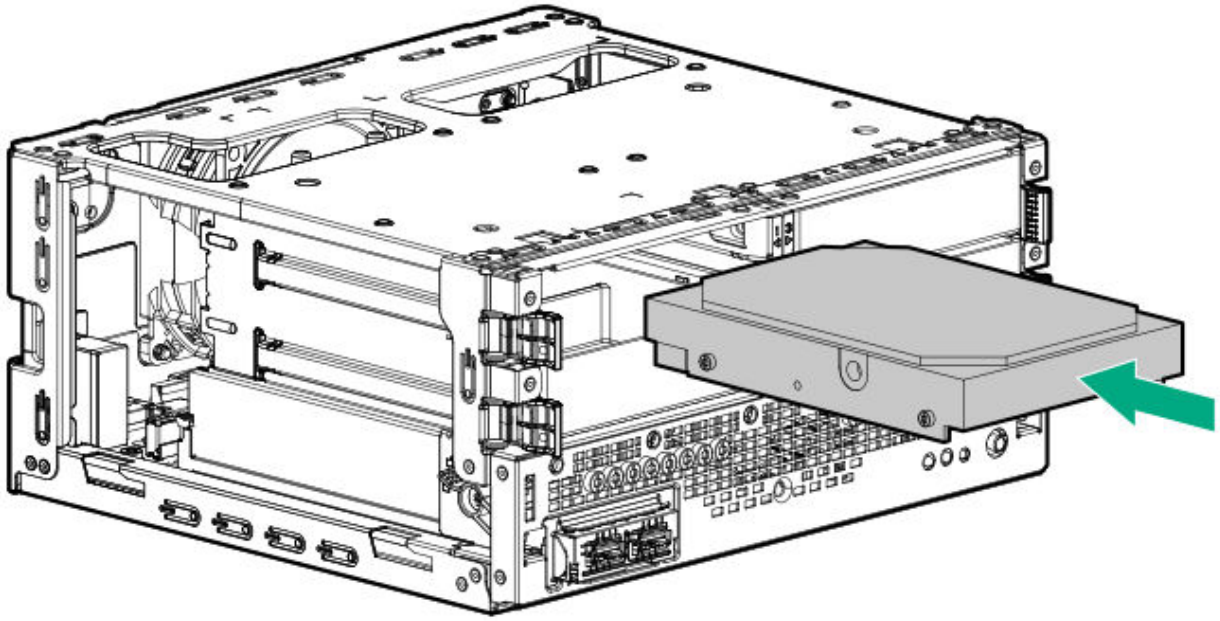

1. Install the front bezel.
2. Connect all peripheral cables to the server.
3. Connect the power adapter to the server, and then secure the power adapter cord in the power cord clamp.
4. Connect the power cord to the AC source.
5. Power up the server.
6. Determine the status of the server drives.
7. To configure the drive arrays, see the relevant controller guide.

Results

The installation is complete.

Installing an SFF drive

Prerequisites

CAUTION: A discharge of static electricity from a finger or other conductor might damage system boards or other static-sensitive devices. To prevent damage, observe antistatic precautions.

- Before you perform this procedure, review the Drive installation guidelines.
- Before you perform this procedure, make sure that you have the following items available:
  - T-10 Torx screwdriver
  - T-15 Torx screwdriver
  - Phillips No. 1 screwdriver—This tool is required if you plan to install an SFF drive that ships with its own carrier.
  - SFF drive converter option kit

About this task

To install SFF hard drives and SSDs, use the LFF-to-SFF drive converter option.

In general, SFF drives require as little as half the power and generate less heat than LFF drives.

SSDs have no moving parts. Information is stored in microchips. Traditional hard drives use a mechanical arm with a read/write head to move around and read information from the right location on a rotating storage platter. This lack of rotating media in an SSD:

- Greatly reduces the drive power consumption in the server.
- Enable an SSD to tolerate higher operating shock and vibration levels. SSDs are suitable for server workloads with highly random data under a variety of write-workload applications.

Procedure

1. Power down the server.
2. Disconnect the power cord from the AC source.
3. Remove the power adapter cord from the power cord clamp, and then disconnect the power adapter from the server.
4. Disconnect all peripheral cables from the server.
5. If installed, unlock and remove the security padlock and/or the Kensington security lock.

   For more information, see the lock documentation.
6. If the server is in a vertical orientation, position the server in a horizontal orientation.

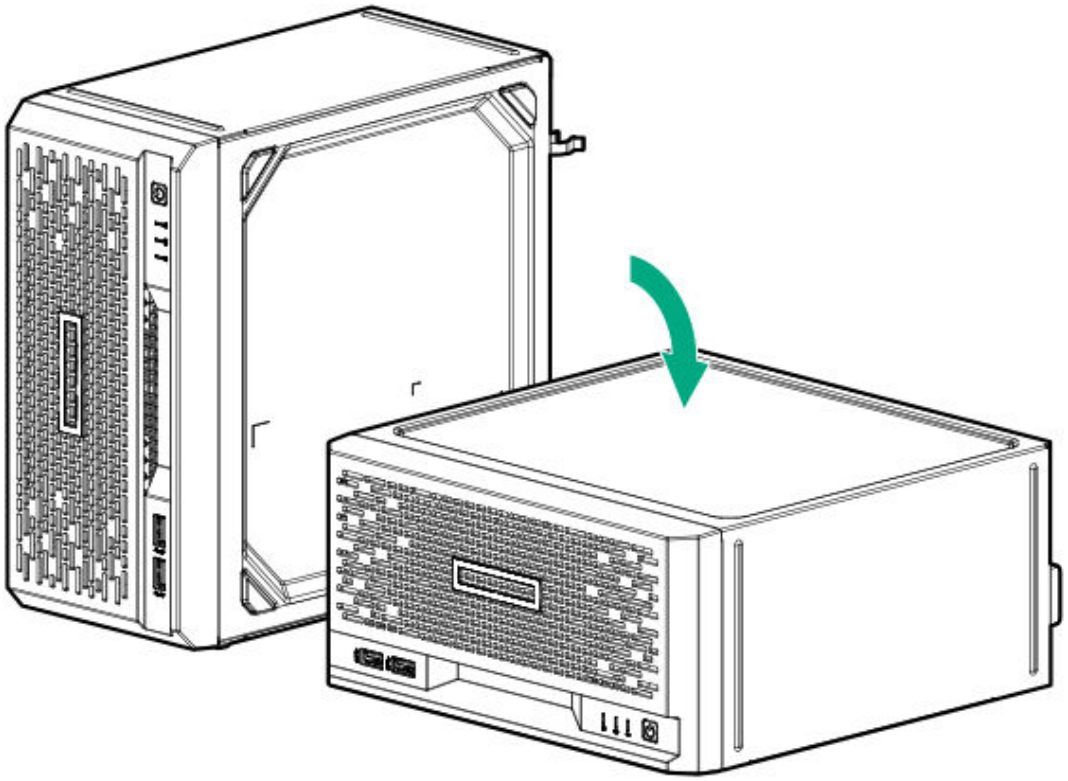

7. Remove the front bezel.
8. If the drive you are installing has its own carrier, remove the carrier.

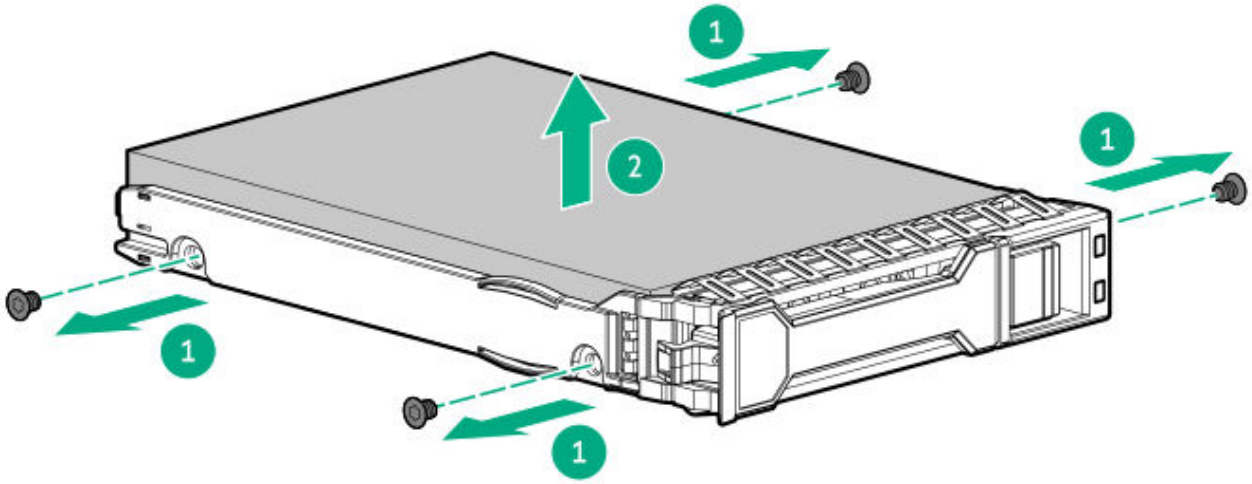

9. Install the SFF drive in the drive converter tray.

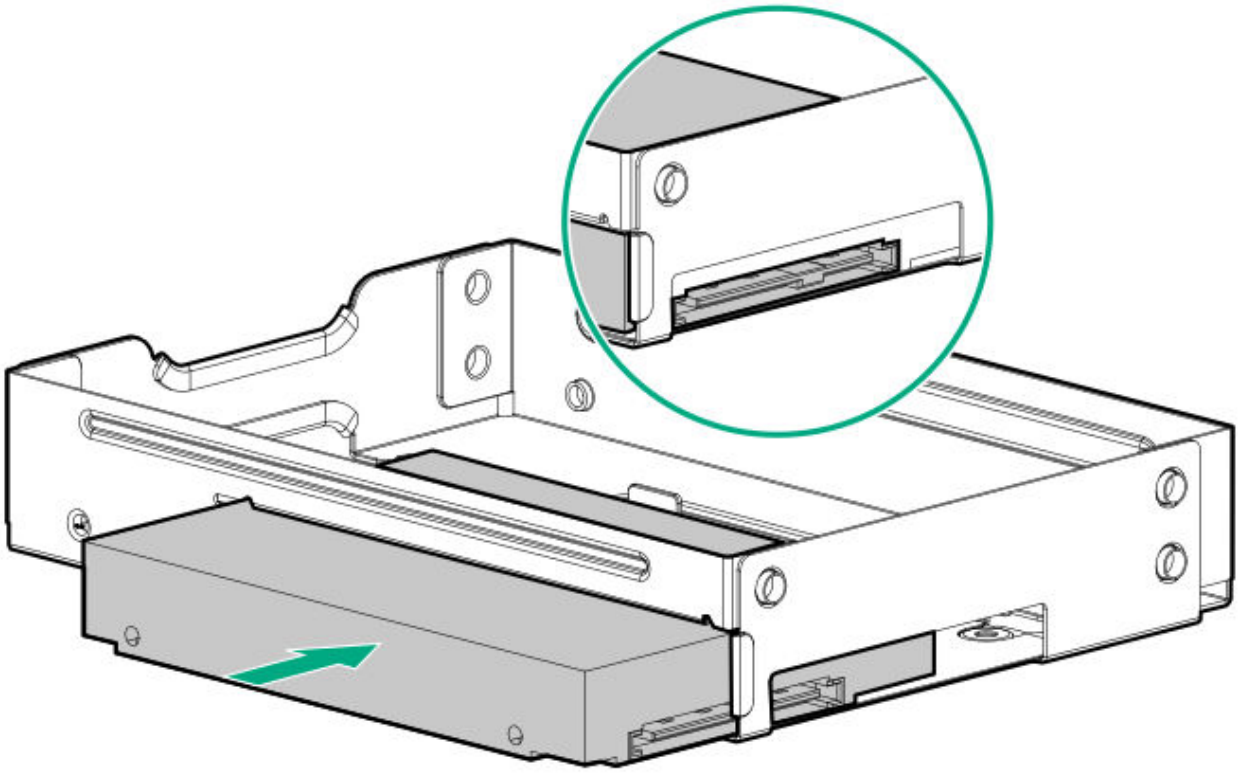

.0. To install the screws included in the converter kit, follow the callout sequence in the following illustration.

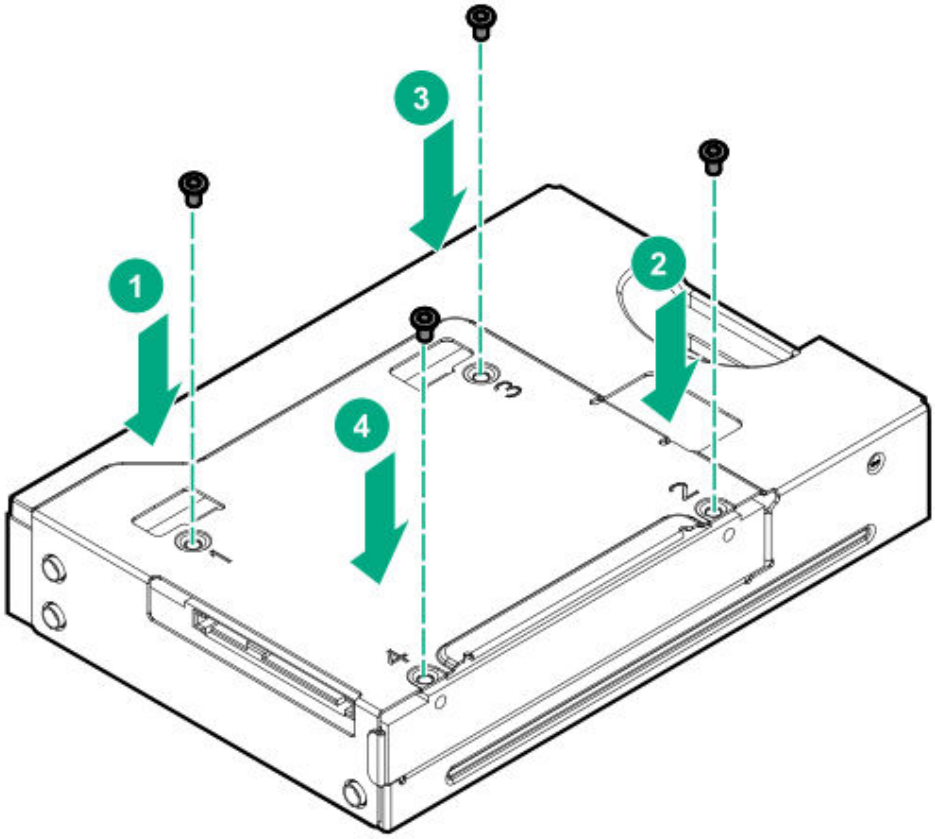

.1. Remove three drive screws from the front panel.

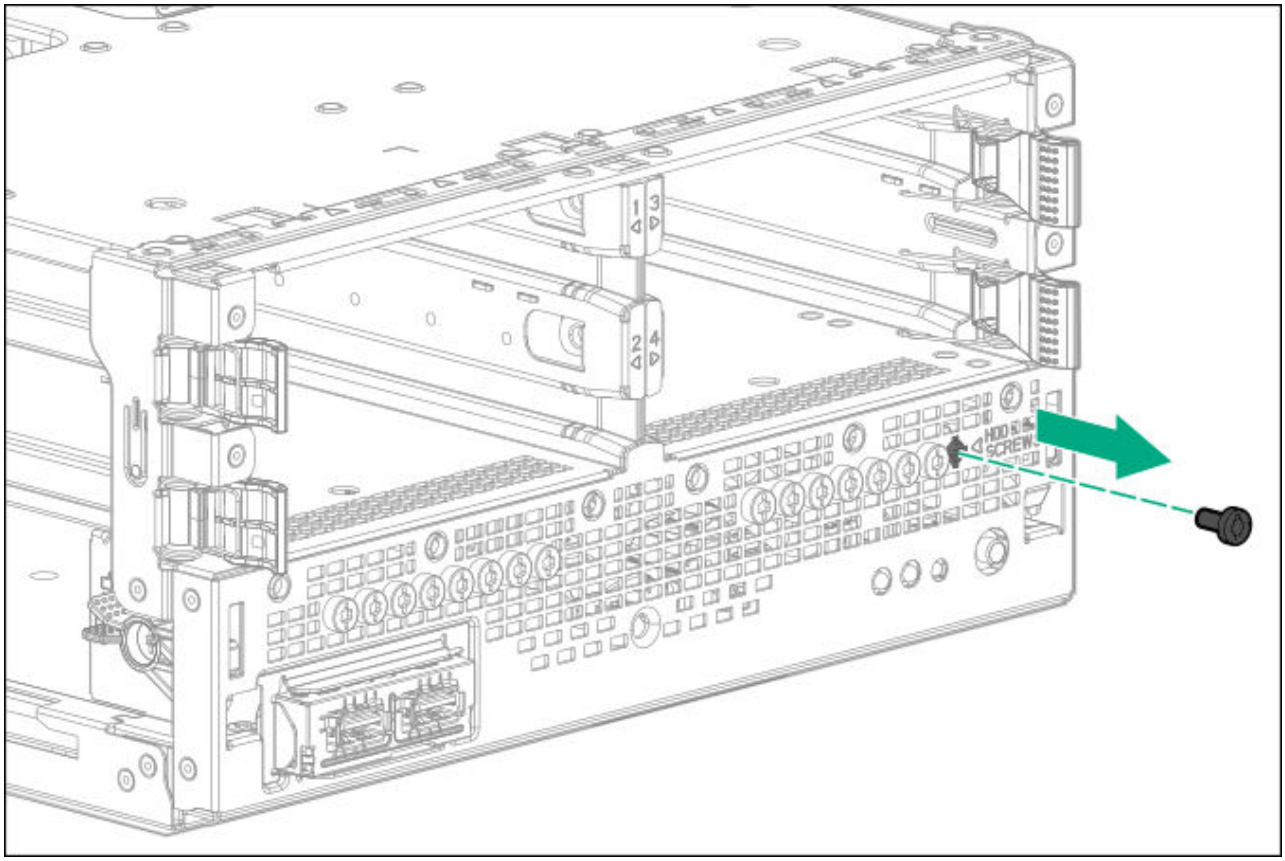

.2. Install the three screws removed from the front panel on the left and right sides of the drive converter tray.

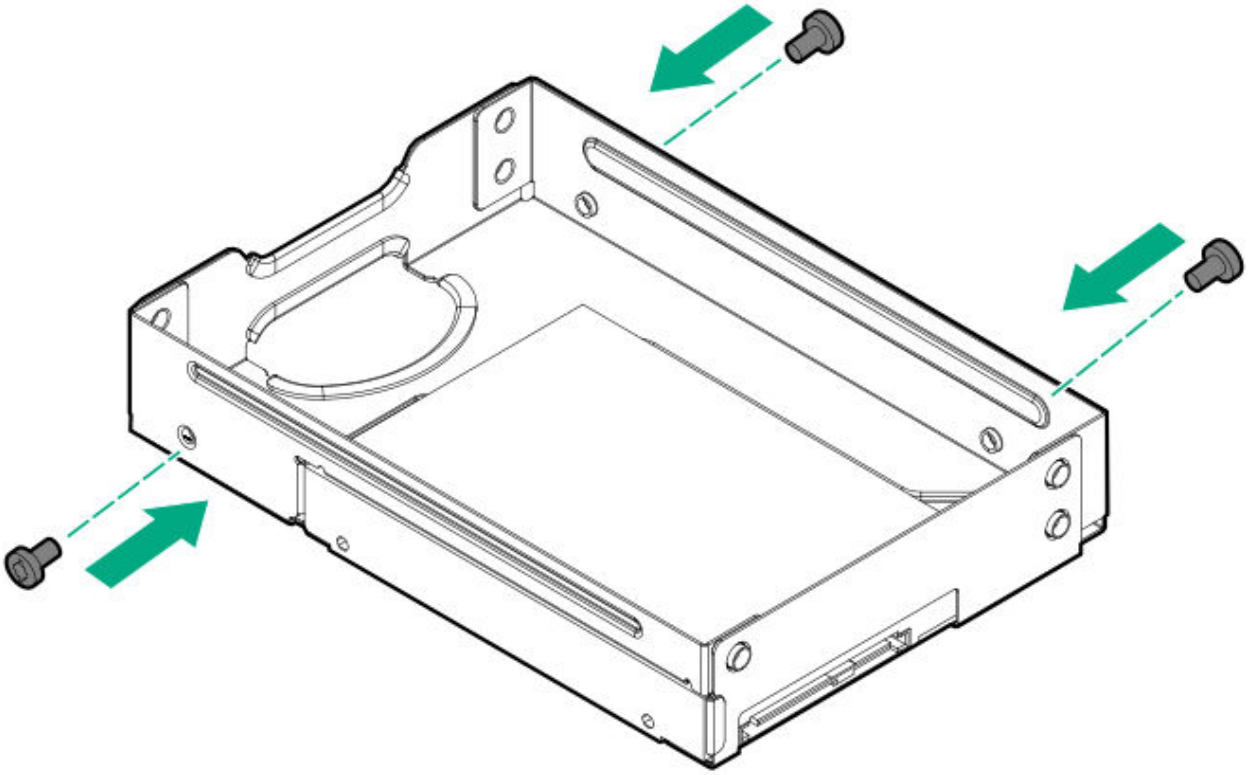

.3. Slide the drive converter tray into the bay until it clicks into place.

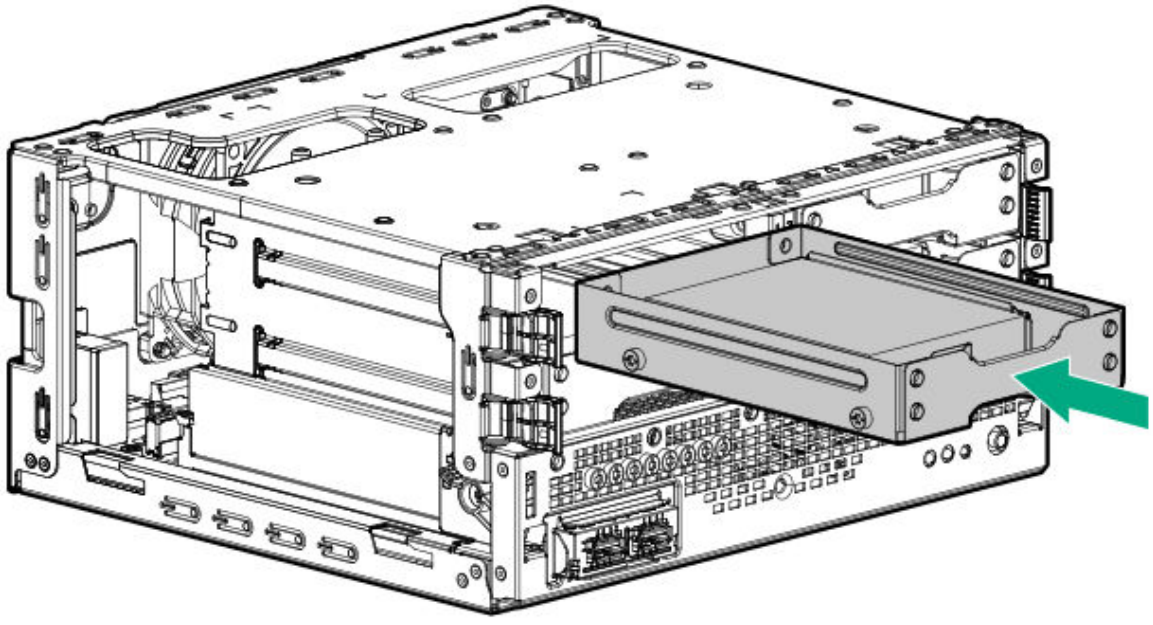

.4. Install the front bezel.

5. If removed, install the security padlock and/or the Kensington security lock.

   For more information, see the lock documentation.

6. Connect all peripheral cables to the server.
7. Connect the power adapter to the server, and then secure the power adapter cord in the power cord clamp.
8. Connect the power cord to the AC source.
9. Power up the server.
10. Determine the status of the server drives.
11. To configure the drive arrays, see the relevant controller guide.

Results

The installation is complete.

Memory option

The server has two DIMM slots supporting PC4-3200AA-E DDR4 UDIMM with ECC. Non-ECC UDIMM is not supported.

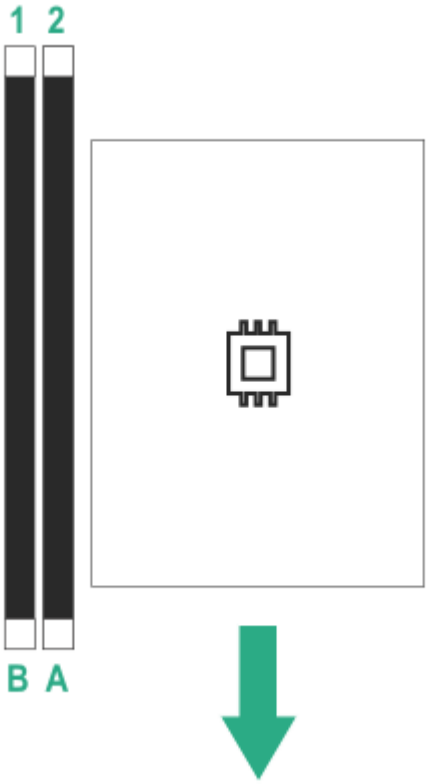

The arrow points to the front of the server.

Subtopics

Memory population rules
DIMM installation guidelines
Installing a DIMM

Memory population rules

- The processor model determines the maximum memory speed:
  - Intel Pentium Gold G6405 supports memory speed of up to 2666 MT/s.
  - Intel Xeon E-2314 supports memory speed of up to 3200 MT/s.
- DIMMs of different speeds may be mixed in any order. However, the server will select the lowest common speed among all the installed DIMMs.
- The maximum memory capacity is a function of the number of DIMM slots and the largest DIMM capacity qualified on the server.

DIMM slot 2A	DIMM slot 1B	Memory capacity
16 GB	—	16 GB
16 GB	16 GB	32 GB
32 GB	—	32 GB
32 GB	32 GB	64 GB

DIMM installation guidelines

When handling a DIMM, observe the following:

- Observe antistatic precautions.
- Handle the DIMM only along the edges.
- Do not touch the components on the sides of the DIMM.
- Do not touch the connectors on the bottom of the DIMM.
- Never wrap your fingers around a DIMM.
- Never bend or flex the DIMM.

When installing a DIMM, observe the following:

- To align and seat the DIMM, use two fingers to hold the DIMM along the side edges.
- To seat the DIMM, use two fingers to apply gentle pressure along the top of the DIMM.

For more information, see the Hewlett Packard Enterprise website (https://www.hpe.com/support/DIMM-20070214-CN).

Installing a DIMM

Prerequisites

Before you perform this procedure, review the DIMM installation guidelines.

About this task

The server uses memory to perform almost all its operations. Upgrading the server memory capacity leads to faster boot-up, processing period, and timely responses to promote optimum system performance.

In a single-DIMM configuration, install the DIMM in the DIMM slot 2A.

Procedure

1. Power down the server.
2. Disconnect the power cord from the AC source.
3. Remove the power adapter cord from the power cord clamp, and then disconnect the power adapter from the server.
4. Disconnect all peripheral cables from the server.
5. If installed, unlock and remove the security padlock and/or the Kensington security lock.

   For more information, see the lock documentation.
6. If the server is in a vertical orientation, position the server in a horizontal orientation.

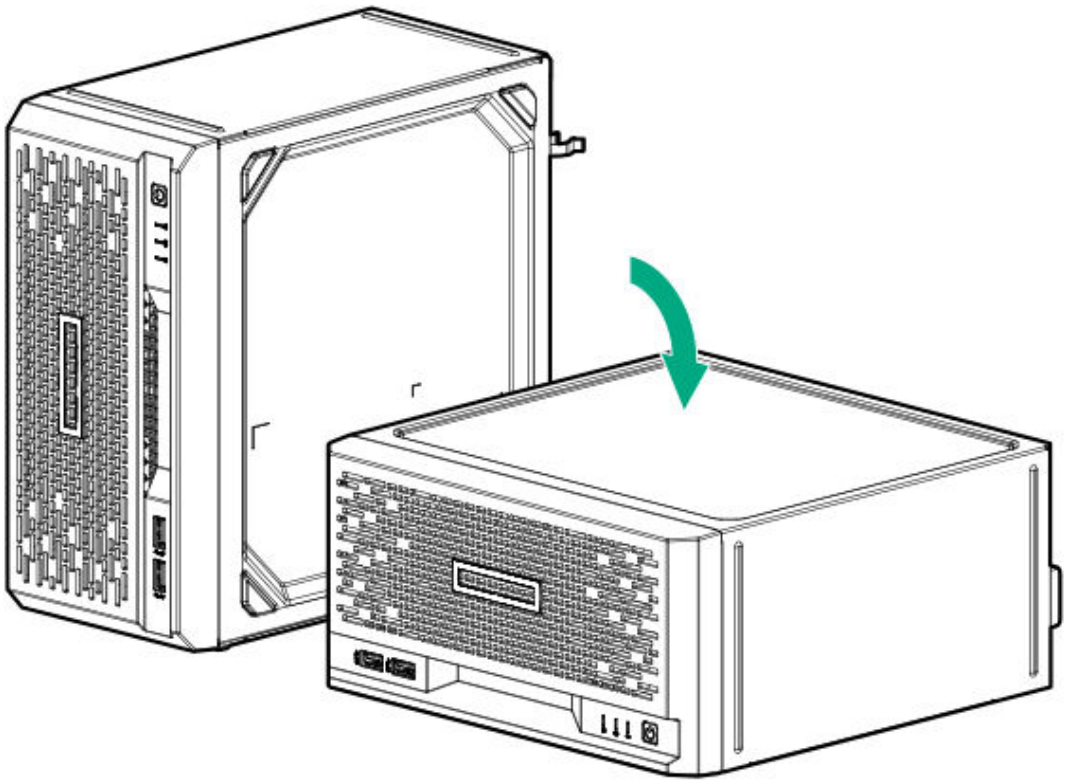

7. Remove the chassis cover.
8. Remove the system board assembly.
9. Install the DIMM:

   a. Open the DIMM slot latches (callout 1).

b. Align the notch on the bottom edge of the DIMM with the keyed surface of the DIMM slot, and then fully press the DIMM into the slot until the latches snap back into place (callout 2).

   The DIMM slots are structured to ensure proper installation. If you try to insert a DIMM but it does not fit easily into the slot, you might have positioned it incorrectly. Reverse the orientation of the DIMM and insert it again.

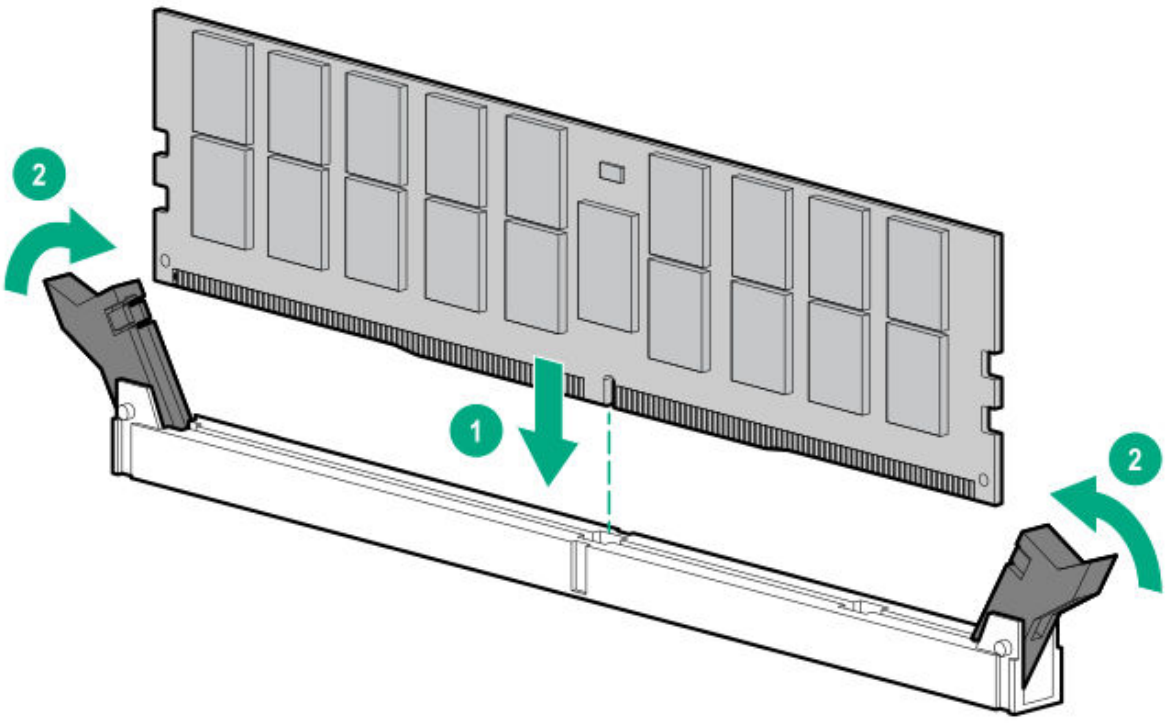

.0. Install the system board assembly.

.1. Install the chassis cover.

.2. If removed, install the security padlock and/or the Kensington security lock.

   For more information, see the lock documentation.

.3. Connect all peripheral cables to the server.

.4. Connect the power adapter to the server, and then secure the power adapter cord in the power cord clamp.

.5. Connect the power cord to the AC source.

.6. Power up the server.

.7. To configure the memory settings:

   a. From the boot screen, press **F9** to access UEFI System Utilities.

b. From the System Utilities screen, select **System Utilities > System Configuration > BIOS/Platform Configuration (RBSU) > Memory Options**.

Results

The installation is complete.

Storage controller options

The server supports the following storage controllers:

- Intel Virtual RAID on CPU (Intel VROC)—Provides software RAID support for direct attached SATA drives. This controller supports SATA RAID 0, 1, 5, 10 levels. For more information on Intel VROC, see the OS-specific user guide:

  https://www.hpe.com/support/IntelVROC-Gen10Plus-docs

- Type-p PCIe plug-in storage controller option—Supports hardware RAID for SATA drives.

  For more information on drive array and storage controller configuration, see Configuring storage controllers.

Subtopics

Preparing the server for storage controller installation
Installing a type-p PCIe plug-in controller option

Preparing the server for storage controller installation

Prerequisites

Before beginning this procedure, download the Service Pack for ProLiant (SPP) from the Hewlett Packard Enterprise website (**https://www.hpe.com/servers/spp/download**).

Procedure

1. If the server was previously configured:

   a. Back up data on the system.

   b. Close all applications.

c. Ensure that users are logged off and that all tasks are completed on the server.

> **CAUTION:** In systems that use external data storage, be sure that the server is the first unit to be powered down and the last to be powered back up. Taking this precaution ensures that the system does not erroneously mark the drives as failed when the server is powered up.

2. If the server firmware is not the latest revision, update the firmware.
3. If the new controller is the new boot device, install the controller drivers.

Installing a type-p PCIe plug-in controller option

Prerequisites

> **CAUTION:** A discharge of static electricity from a finger or other conductor might damage system boards or other static-sensitive devices. To prevent damage, observe antistatic precautions.

Before you perform this procedure, make sure that you have the following items available:

- T-15 Torx screwdriver
- Phillips No. 1 screwdriver—This tool is required if you plan to replace the default bracket on the storage controller.

Procedure

1. Power down the server.
2. Disconnect the power cord from the AC source.
3. Remove the power adapter cord from the power cord clamp, and then disconnect the power adapter from the server.
4. Disconnect all peripheral cables from the server.
5. If installed, unlock and remove the security padlock and/or the Kensington security lock.

   For more information, see the lock documentation.
6. If the server is in a vertical orientation, position the server in a horizontal orientation.

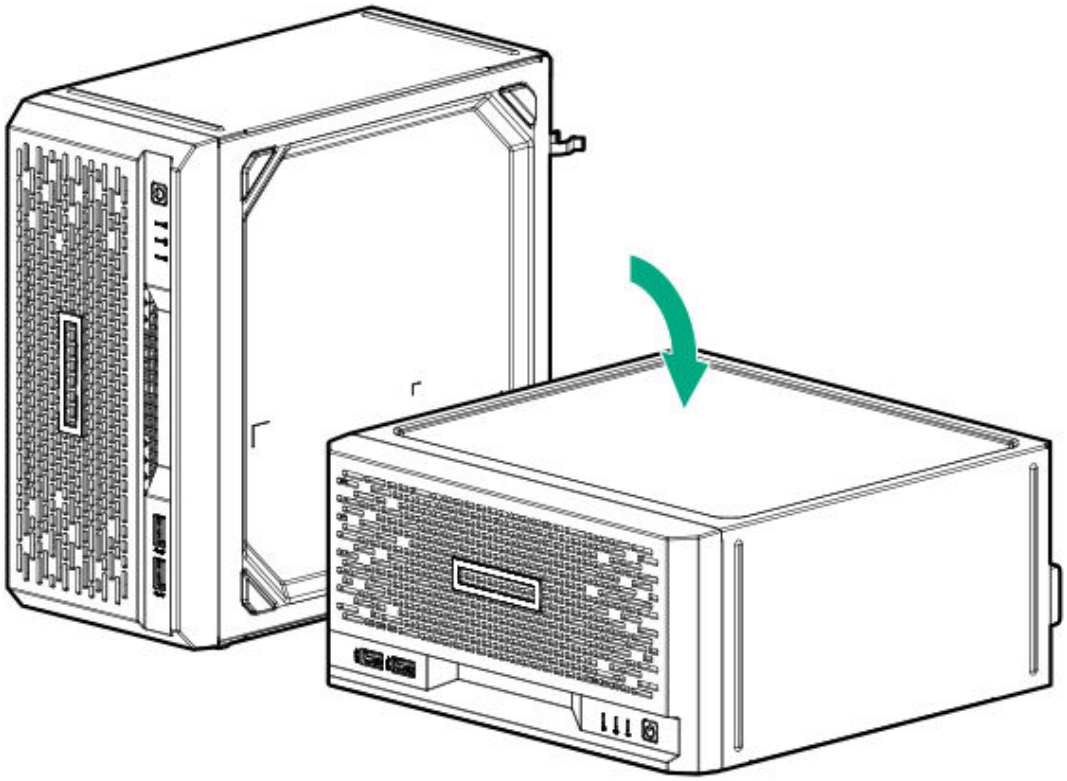

7. Remove the chassis cover.
8. Remove the system board assembly.
9. If the storage controller is shipped with a full-height bracket attached, replace it with a low-profile one.
10. Remove the expansion slot blank.

    Retain the blank for future use.

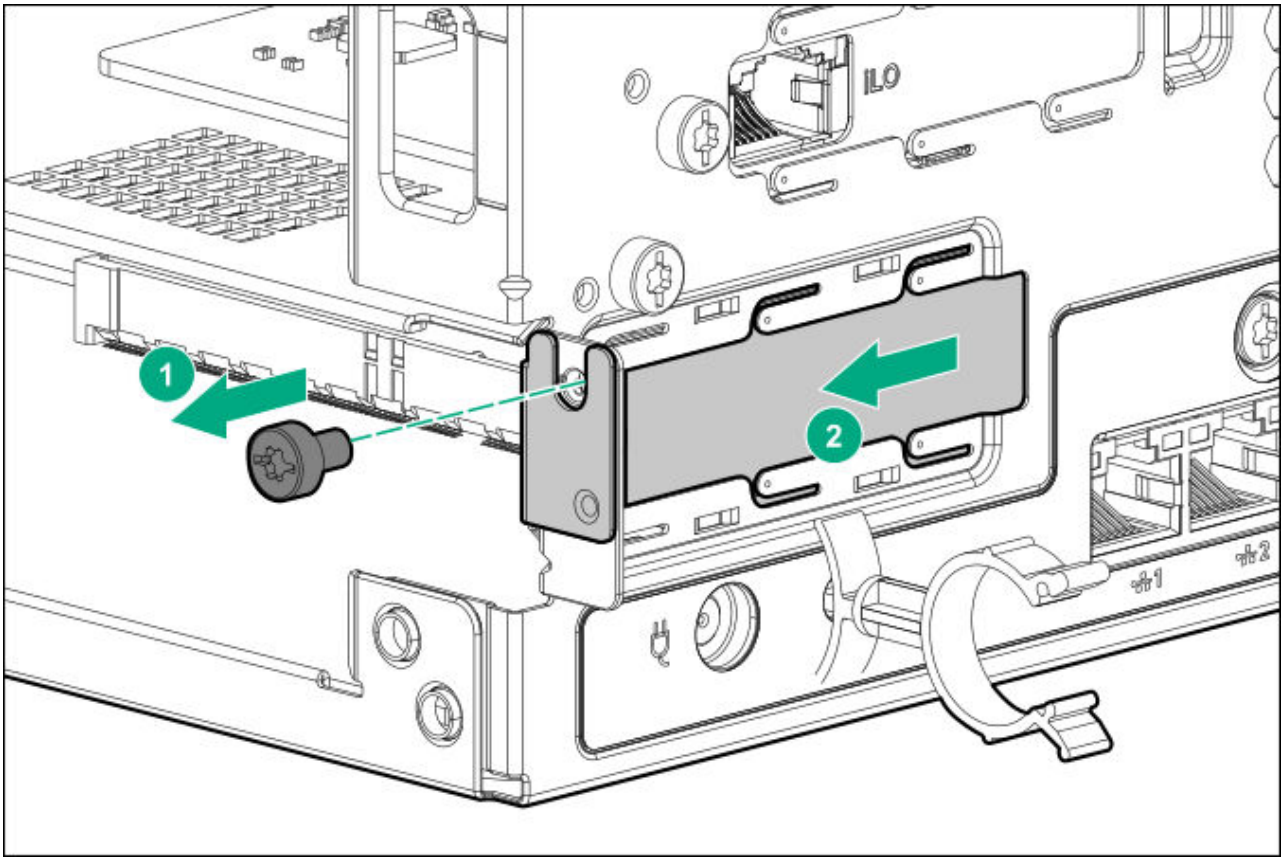

.1. Install the storage controller. Make sure that the storage controller is firmly seated in the slot.

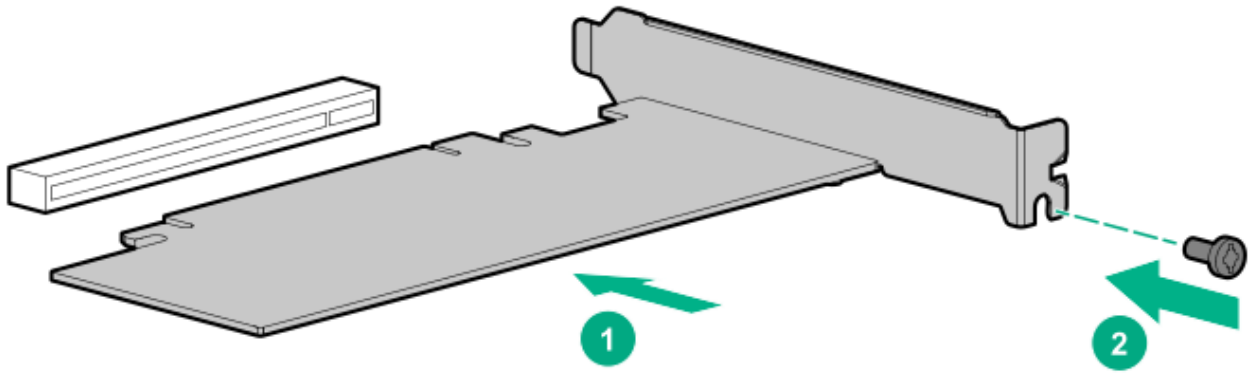

.2. Cable the controller.

.3. Install the system board assembly.

.4. Install the chassis cover.

.5. If removed, install the security padlock and/or the Kensington security lock.

For more information, see the lock documentation.

6. Connect all peripheral cables to the server.
7. Connect the power adapter to the server, and then secure the power adapter cord in the power cord clamp.
8. Connect the power cord to the AC source.
9. To configure the controller, see the relevant controller guide.

Results

The installation is complete.

Expansion card options

The server supports the installation of half-height, half-length (low-profile) PCIe4 expansion / add-in (AIC) cards with maximum power draw of 25 W.

- A storage controller to enable advanced drive features.
- A network adapter with advanced Ethernet connectivity features.
- A single-width accelerator to meet your computational and graphics workload requirements.

Subtopics

Installing an expansion card

Installing an expansion card

Prerequisites

CAUTION: A discharge of static electricity from a finger or other conductor might damage system boards or other static-sensitive devices. To prevent damage, observe antistatic precautions.

Before you perform this procedure, make sure that you have the following items available:

- T-15 Torx screwdriver

- Phillips No. 1 screwdriver—This tool is required if you plan to replace the default bracket on the expansion card.

Procedure

1. Power down the server.
2. Disconnect the power cord from the AC source.
3. Remove the power adapter cord from the power cord clamp, and then disconnect the power adapter from the server.
4. Disconnect all peripheral cables from the server.
5. If installed, unlock and remove the security padlock and/or the Kensington security lock.

   For more information, see the lock documentation.
6. If the server is in a vertical orientation, position the server in a horizontal orientation.

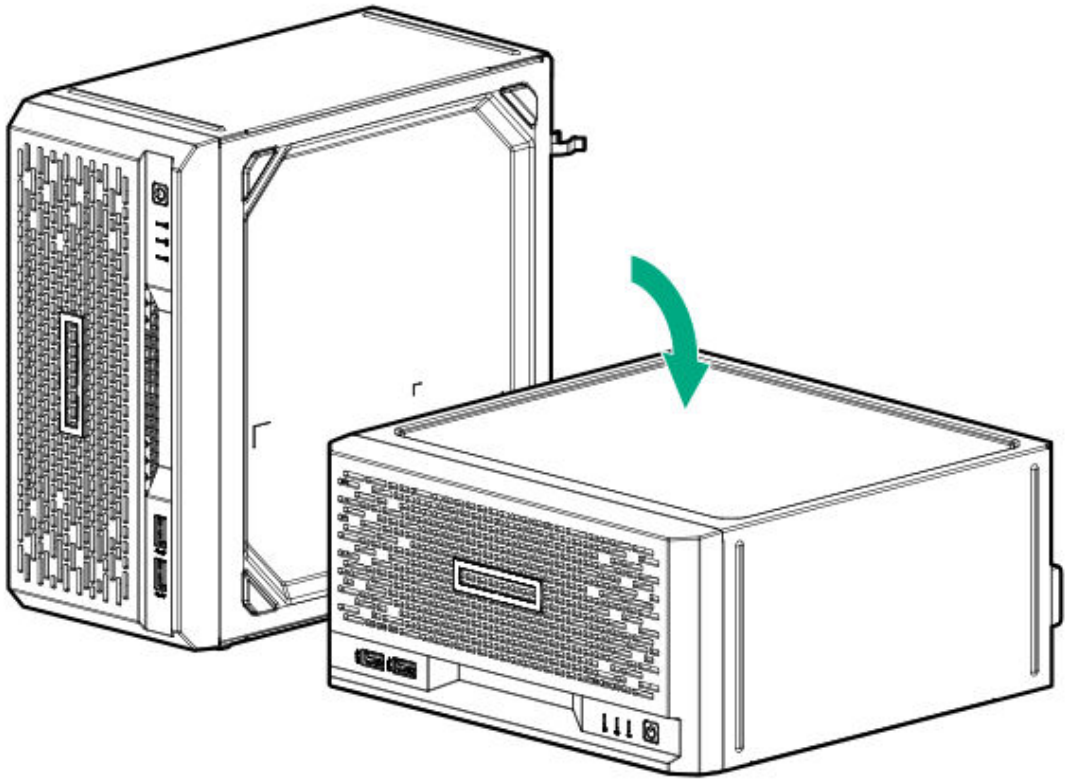

7. Remove the chassis cover.
8. Remove the system board assembly.
9. Remove the expansion slot blank.

Retain the blank for future use.

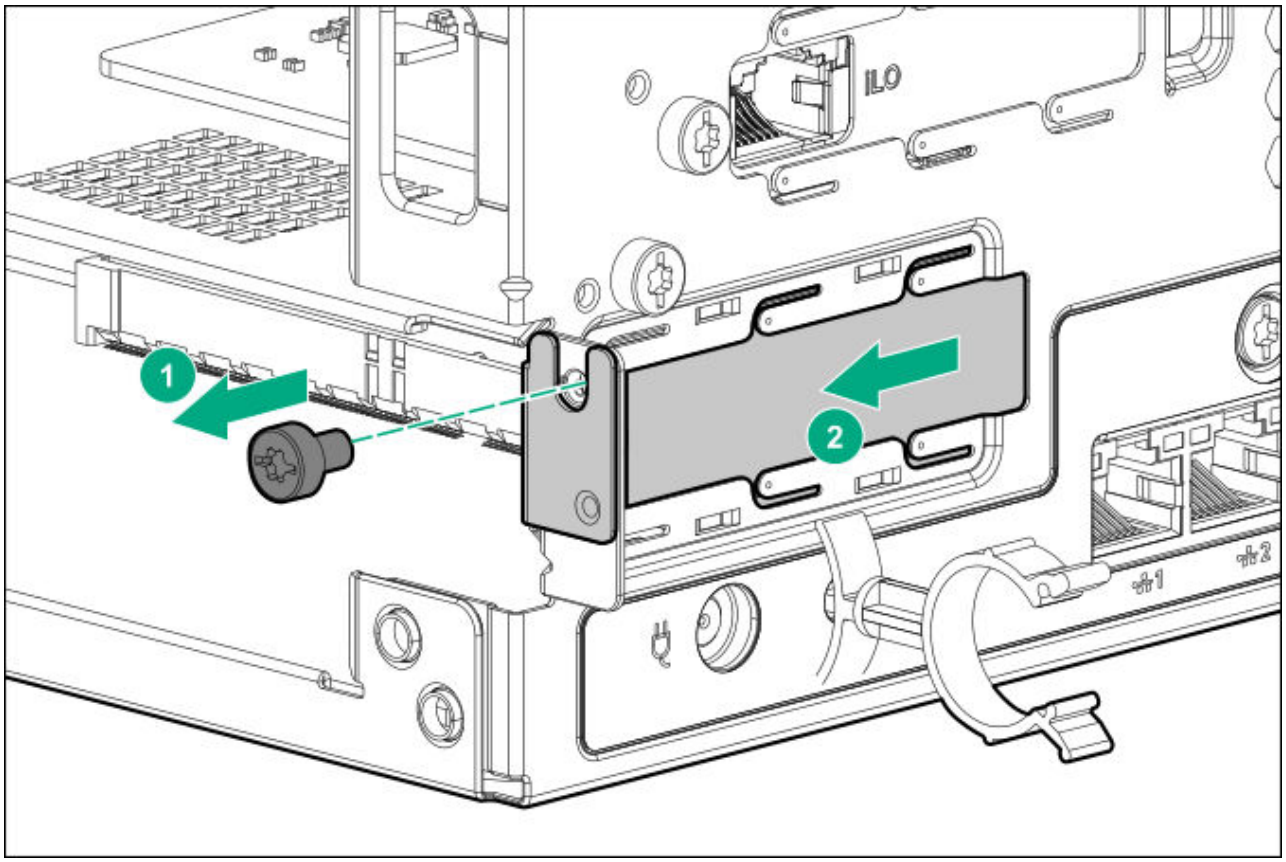

.0. If the expansion card is shipped with an air baffle attached, remove this baffle from the card.

.1. If the expansion card is shipped with a full-height bracket attached, replace it with a low-profile one.

.2. Make sure that any switches or jumpers on the expansion card are set properly.

For more information, see the documentation that ships with the option.

.3. Install the expansion card. Make sure that the card is firmly seated in the slot.

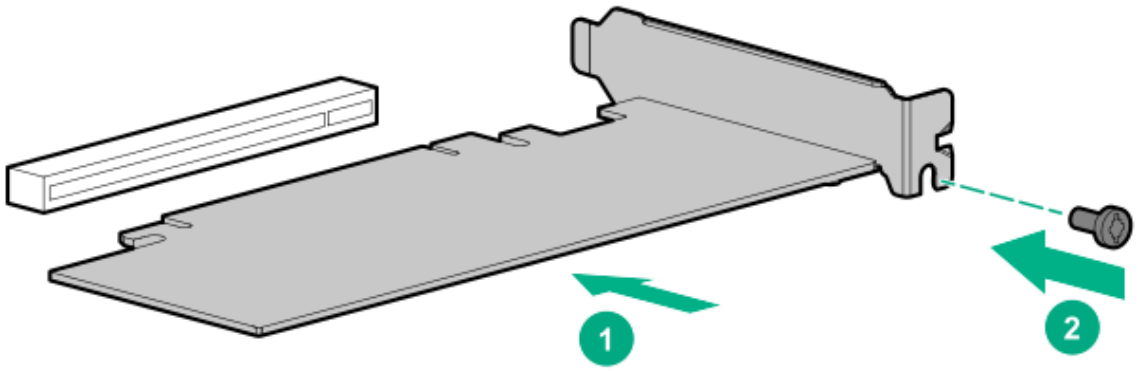

.4. Connect all necessary internal cabling to the expansion card.

For more information on these cabling requirements, see the documentation that ships with the option.

.5. Install the system board assembly.

.6. Install the chassis cover.

.7. Connect all necessary external cabling to the expansion card.

For more information on these cabling requirements, see the documentation that ships with the option.

.8. If removed, install the security padlock and/or the Kensington security lock.

For more information, see the lock documentation.

.9. Connect all peripheral cables to the server.

!0. Connect the power adapter to the server, and then secure the power adapter cord in the power cord clamp.

!1. Connect the power cord to the AC source.

!2. Power up the server.

Results

The installation is complete.

Subtopics

Remove the air baffle from an expansion card
Install a low-profile bracket on an expansion card

Remove the air baffle from an expansion card

Procedure

Remove the air baffle from an expansion card.

The number and location of the latches that secure the baffle to the card will vary depending on the expansion card. The illustration below is only an example image. See the expansion card documentation for model-specific information.

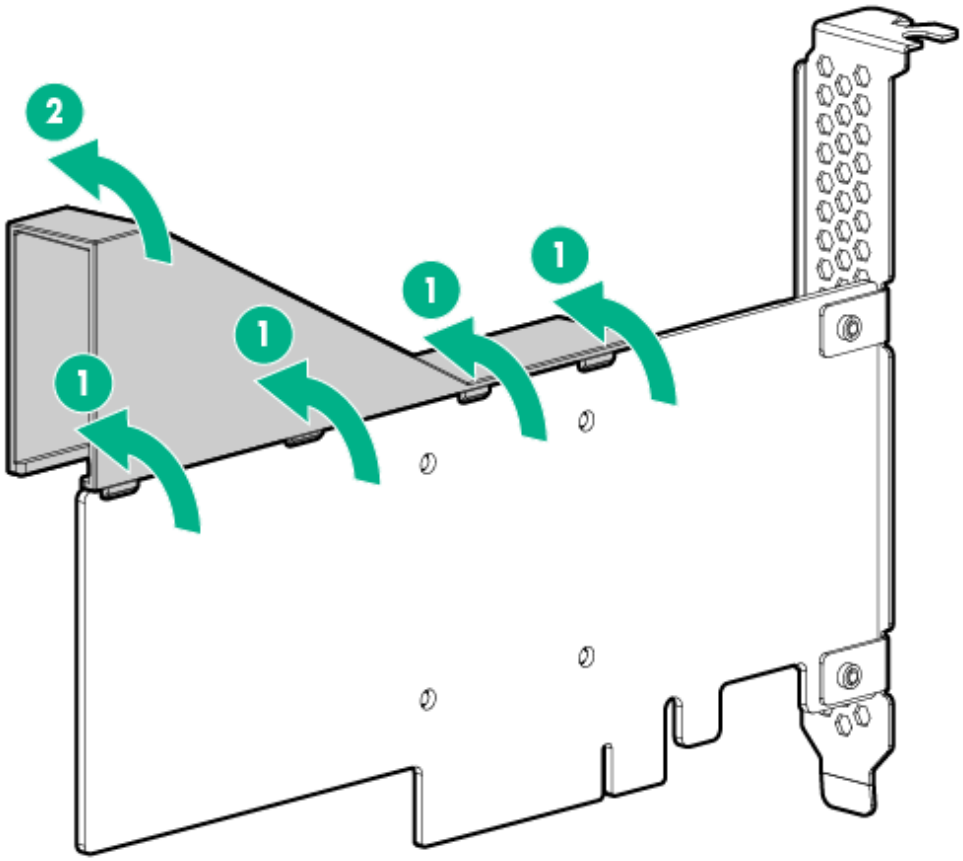

Install a low-profile bracket on an expansion card

About this task

The number and location of the bracket screws will vary depending on the expansion card. The illustrations below are only example images. See the expansion card documentation for model-specific information.

Procedure

1. Remove the full-height bracket from the expansion card.

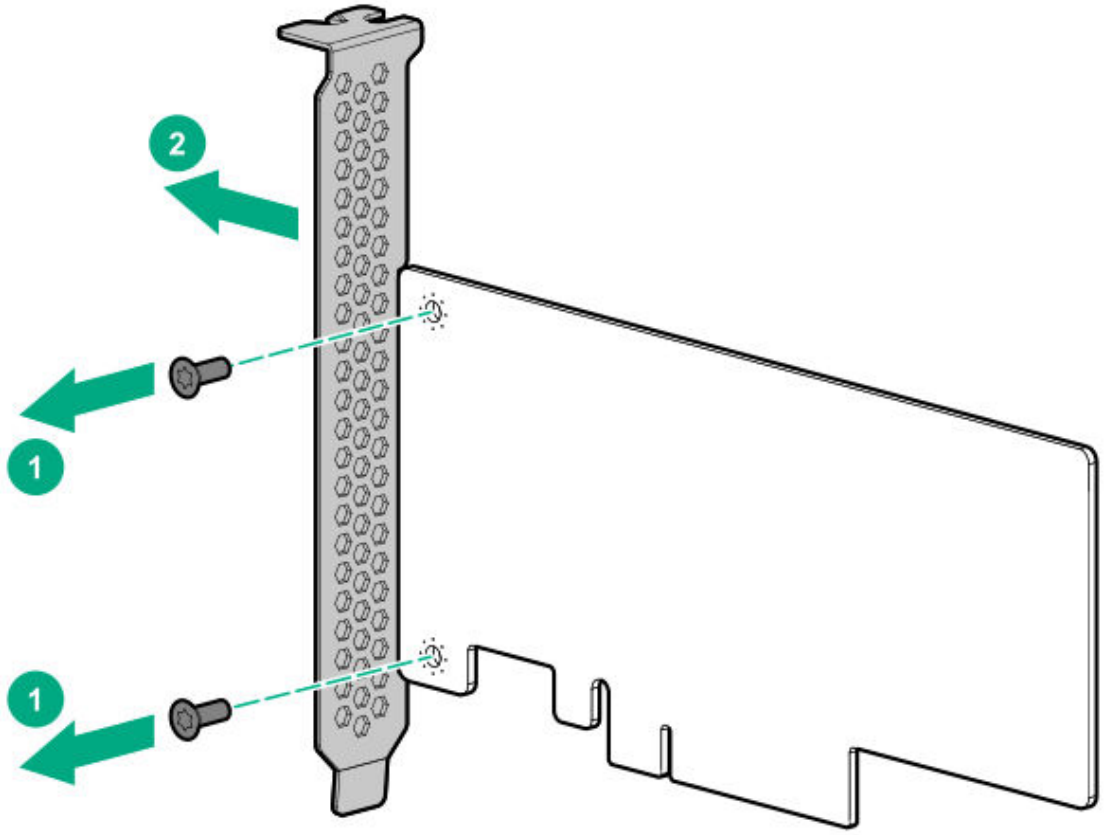

2. Install the low-profile bracket on the expansion card.

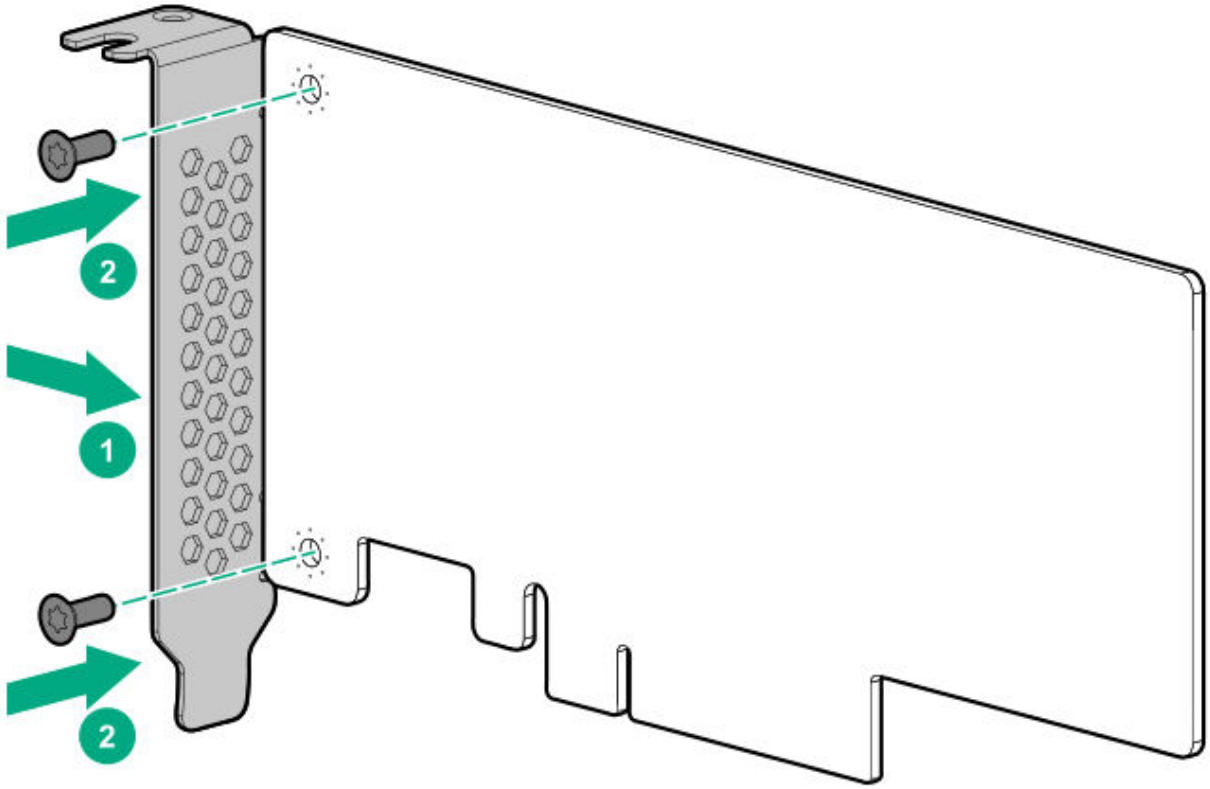

Internal USB device option

The server has an internal USB 3.2 Gen 1 port to install a USB device that can be used as a flash boot media or for data backup/redundancy.

Subtopics

Install an internal USB device

Install an internal USB device

Procedure

1. Power down the server.
2. Disconnect the power cord from the AC source.
3. Remove the power adapter cord from the power cord clamp, and then disconnect the power adapter from the server.
4. Disconnect all peripheral cables from the server.
5. If installed, unlock and remove the security padlock and/or the Kensington security lock.

   For more information, see the lock documentation.
6. If the server is in a vertical orientation, position the server in a horizontal orientation.

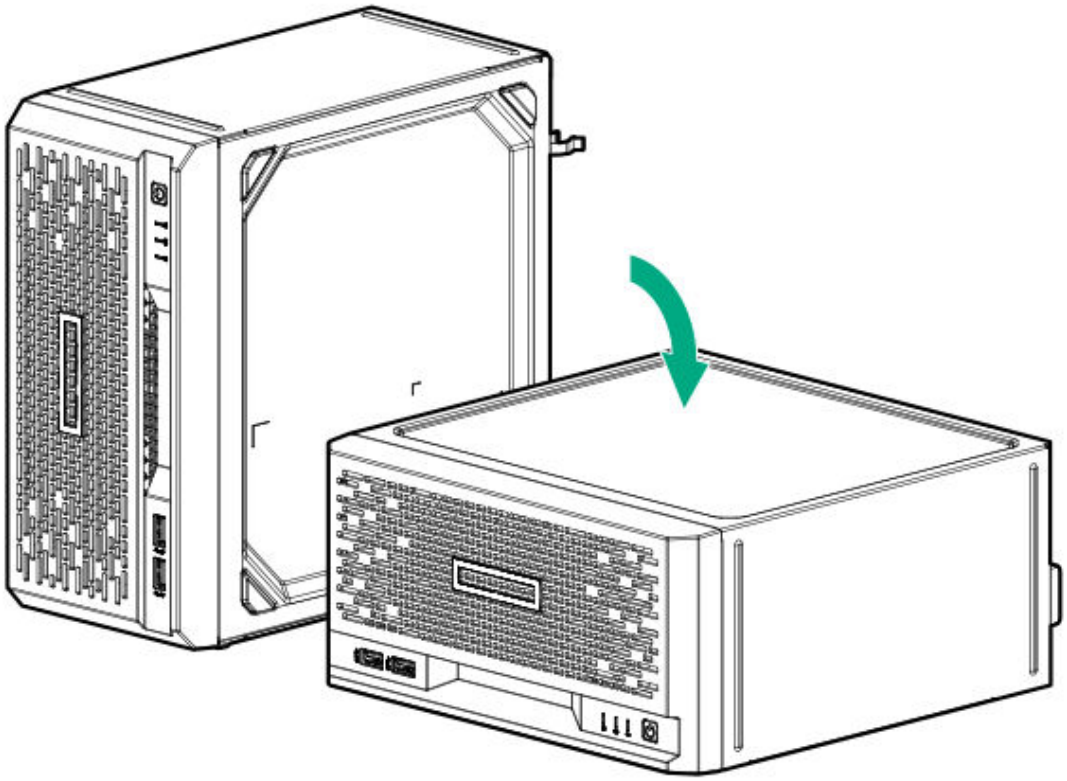

7. Remove the chassis cover.
8. Plug in the USB device into the internal USB port.

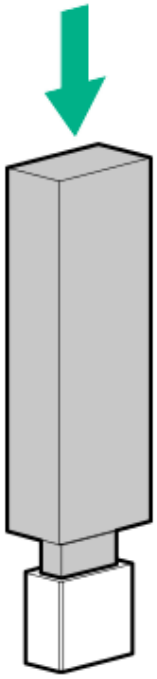

9. Install the chassis cover.
10. If removed, install the security padlock and/or the Kensington security lock.

    For more information, see the lock documentation.
11. Connect all peripheral cables to the server.
12. Connect the power adapter to the server, and then secure the power adapter cord in the power cord clamp.
13. Connect the power cord to the AC source.
14. Power up the server.

Results

The installation is complete.

External HPE RDX Backup System option

To install a simple, inexpensive, and reliable way to securely store your data backups, install an external HPE RDX Backup System. The backup system is a removable, ruggedized, hard disk drive system.

The backup system consists of two components:

- RDX cartridge
- RDX docking station

Hewlett Packard Enterprise recommends that no more than one HPE RDX Removable Disk Backup System be connected to a system at a time.

For more information on installing and configuring the external HPE RDX Removable Disk Backup System, see the RDX product documentation:

https://www.hpe.com/info/rdx

iLO enablement option

The server base configuration supports in-band communication for accessing iLO. The iLO enablement option comes preinstalled with an iLO Essentials license. The remote iLO access feature is activated after the iLO enablement module is installed.

Subtopics

Installing the iLO enablement option

Prerequisites

> **CAUTION:** A discharge of static electricity from a finger or other conductor might damage system boards or other static-sensitive devices. To prevent damage, observe antistatic precautions.

Before you perform this procedure, make sure that you have a T-15 Torx screwdriver available.

Procedure

1. Power down the server.
2. Disconnect the power cord from the AC source.
3. Remove the power adapter cord from the power cord clamp, and then disconnect the power adapter from the server.
4. Disconnect all peripheral cables from the server.
5. If installed, unlock and remove the security padlock and/or the Kensington security lock.

   For more information, see the lock documentation.
6. If the server is in a vertical orientation, position the server in a horizontal orientation.

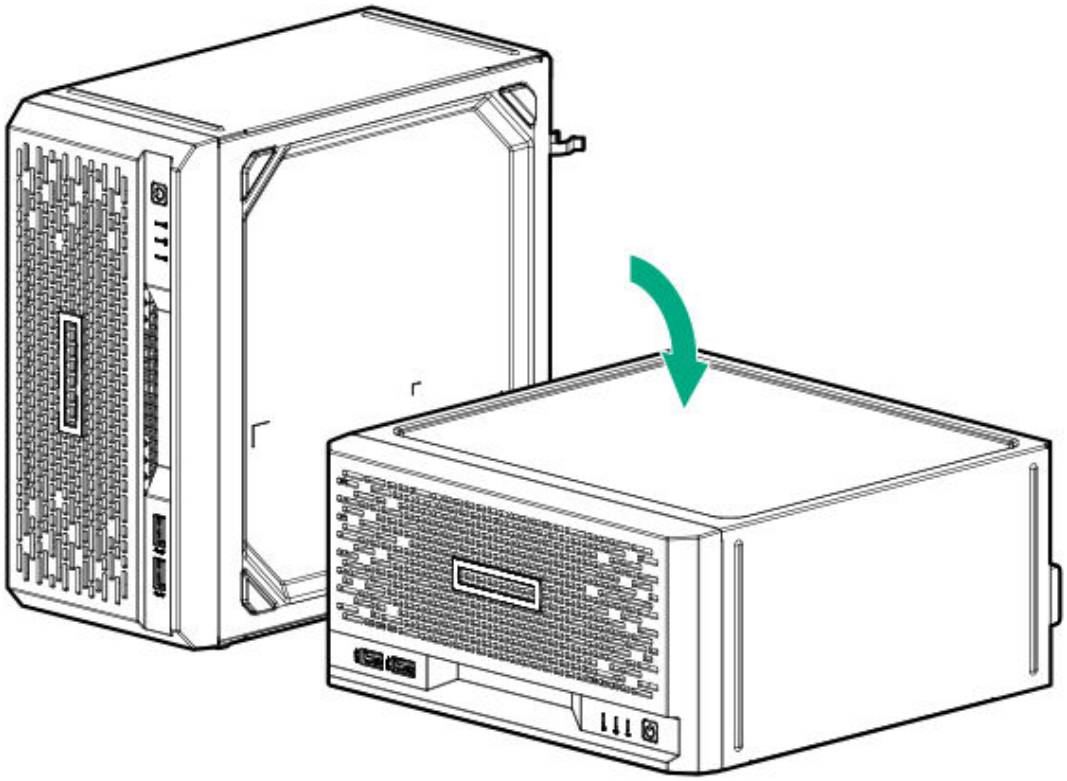

7. Remove the chassis cover.
8. Remove the system board assembly.
9. Remove the iLO enablement module blank.

   Retain the blank for future use.

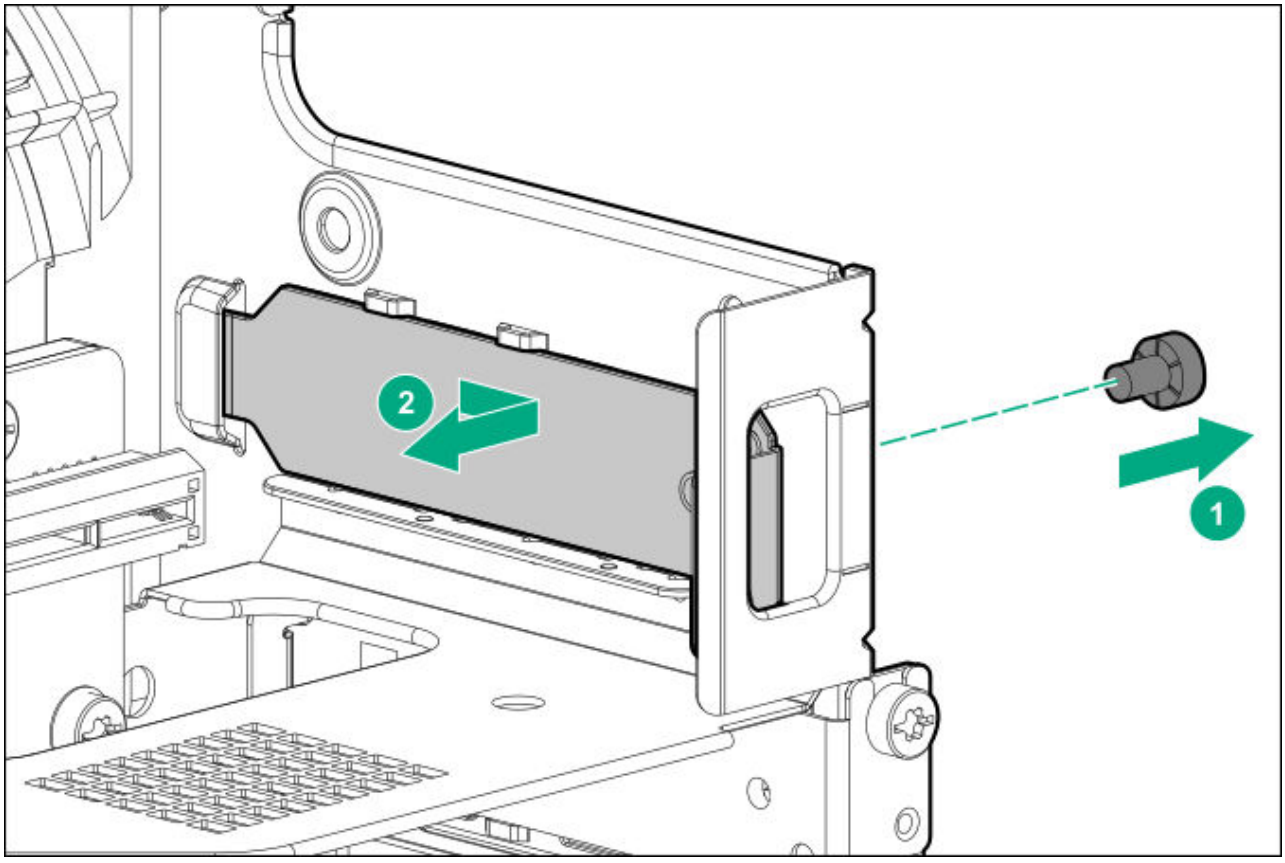

.0. Install the iLO enablement module (callout 1), and then install the screw on the rear panel (callout 2). Make sure that the module is firmly seated in the slot.

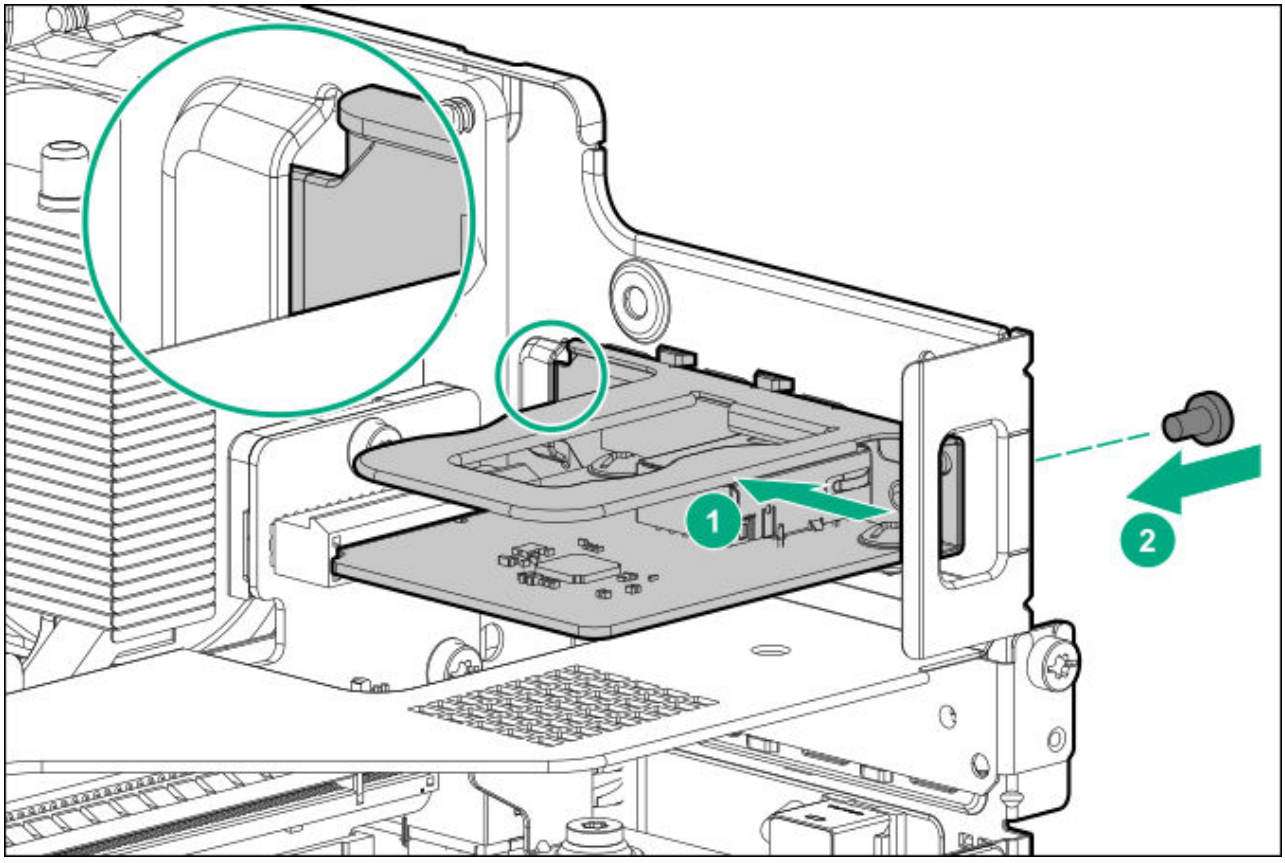

1. Install the system board assembly.
2. Install the chassis cover.
3. If removed, install the security padlock and/or the Kensington security lock.

   For more information, see the lock documentation.
4. Connect all peripheral cables to the server.
5. Connect the power adapter to the server, and then secure the power adapter cord in the power cord clamp.
6. Connect the power cord to the AC source.
7. Power up the server.

Results

The installation is complete.

The iLO dedicated network port is now the default port for iLO connection. To configure the iLO dedicated network port settings, see the iLO user guide:

https://www.hpe.com/support/ilo-docs

Cabling

This chapter includes cabling guidelines and diagrams for internal component cabling.

Subtopics

Cabling guidelines
Storage cabling
Fan cabling

Cabling guidelines

The cabling diagrams in this chapter used different colors to better differentiate one cable from another for illustration clarity. Most of the system cables are actually black.

Observe the following guidelines when working with system cables.

Before connecting cables

- Note the port labels on the PCA components. Not all these components are used by all systems:
  - System board ports
  - Drive and power supply backplane ports
  - Expansion card ports (controllers, adapters, expanders, risers, and similar boards)
- Note the label near each cable connector. This label indicates the destination port for the cable connector.
- Some data cables are prebent. Do not unbend or manipulate the cables.
- To prevent mechanical damage or depositing oil that is present on your hands, and other contamination, do not touch the ends of the connectors.

When connecting cables

- Before connecting a cable to a port, lay the cable in place to verify the length of the cable.
- Use the internal cable management features to properly route and secure the cables.
- When routing cables, be sure that the cables are not in a position where they can be pinched or crimped.

- Avoid tight bend radii to prevent damaging the internal wires of a power cord or a server cable. Never bend power cords and server cables tight enough to cause a crease in the sheathing.
- Make sure that the excess length of cables is properly secured to avoid excess bends, interference issues, and airflow restriction.
- To prevent component damage and potential signal interference, make sure that all cables are in their appropriate routing position before installing a new component and before closing up the server.

When disconnecting cables

- Grip the body of the cable connector. Do not pull on the cable itself because this action can damage the internal wires of the cable or the pins on the port.
- If a cable does not disconnect easily, check for any release latch that must be pressed to disconnect the cable.

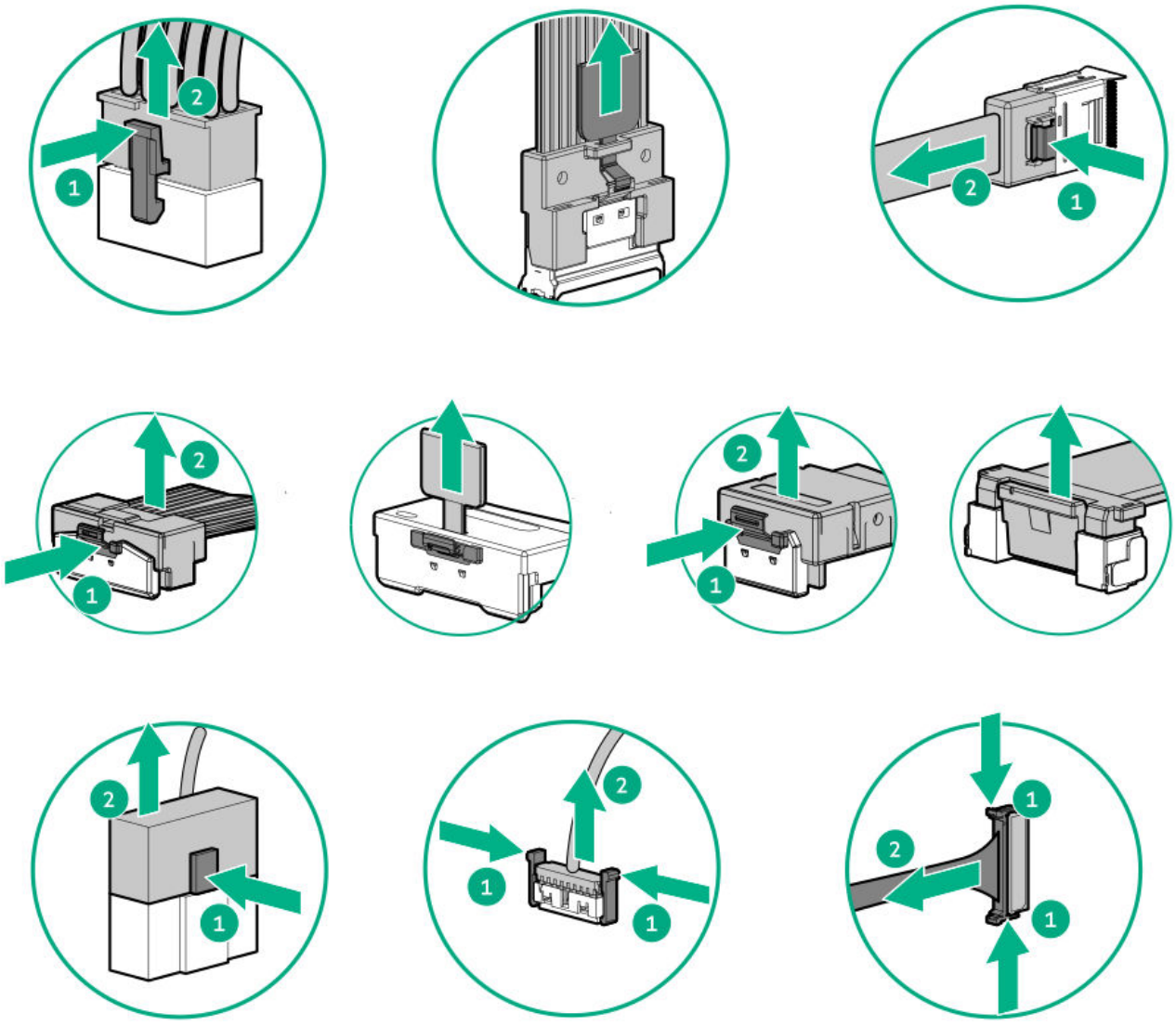

- Remove cables that are no longer being used. Retaining them inside the system can restrict airflow. If you intend to use the removed cables later, label and store them for future use.

Storage cabling

Subtopics

Four-bay drive cabling: Onboard SATA controller cabling
The server supports onboard SATA controller cabling. Use the table and image below to cable your server for onboard SATA mode.
Four-bay drive cabling: Type-p controller cabling

Four-bay drive cabling: Onboard SATA controller cabling

The server supports onboard SATA controller cabling. Use the table and image below to cable your server for onboard SATA mode.

IMPORTANT:

The four-bay non-hot-plug drive cable assembly consists of the drive and ambient temperature sensor cables. If any of these cables becomes defective, the entire cable assembly will need to be replaced.

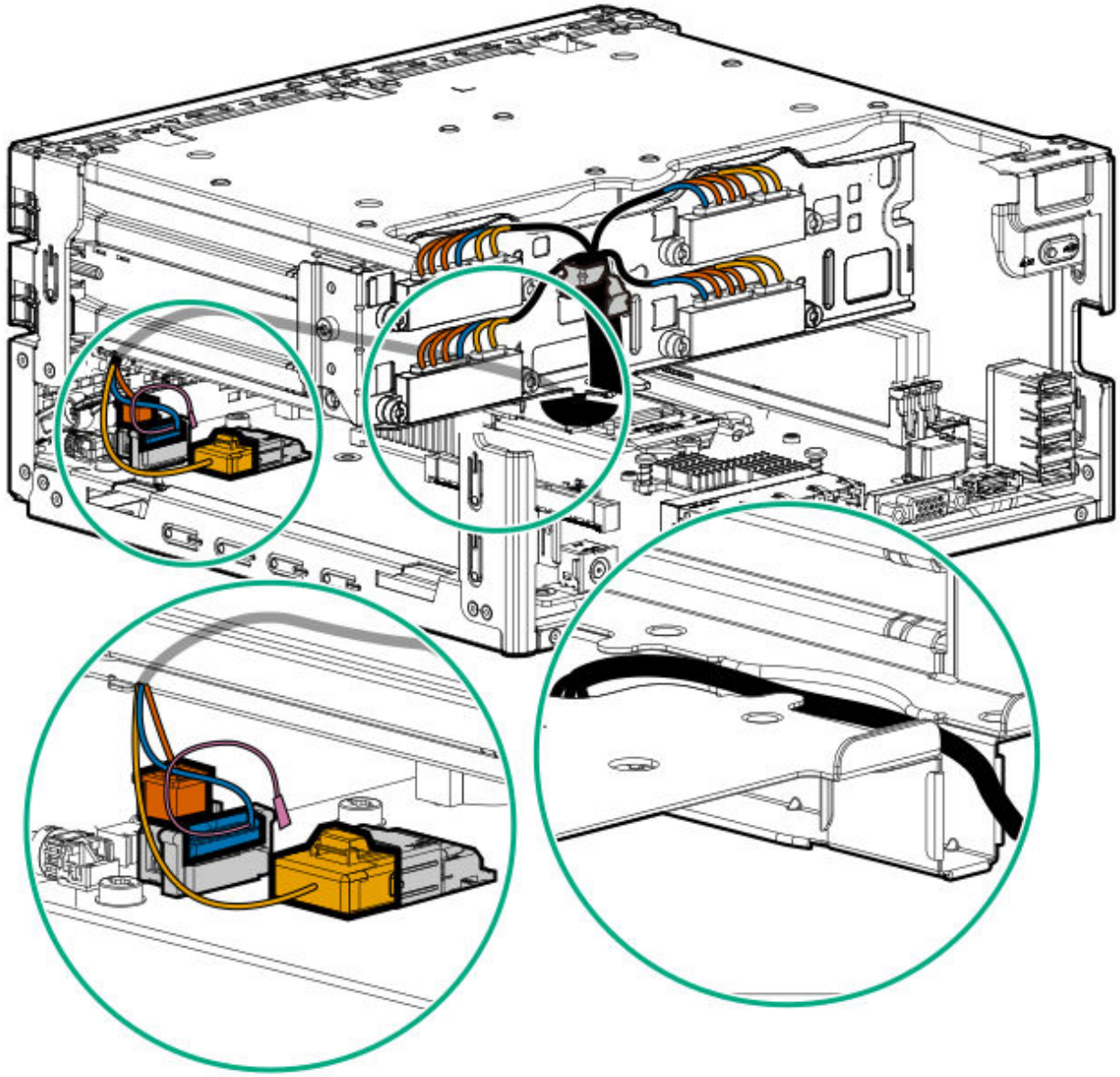

Color	Description
Orange	Drive power cable
Blue	Drive sideband signal cable
Gold	Drive data cable
Pink	Ambient temperature sensor cable

Four-bay drive cabling: Type-p controller cabling

IMPORTANT:

The four-bay non-hot-plug drive cable assembly consists of the drive and ambient temperature sensor cables. If any of these cables becomes defective, the entire cable assembly will need to be replaced.

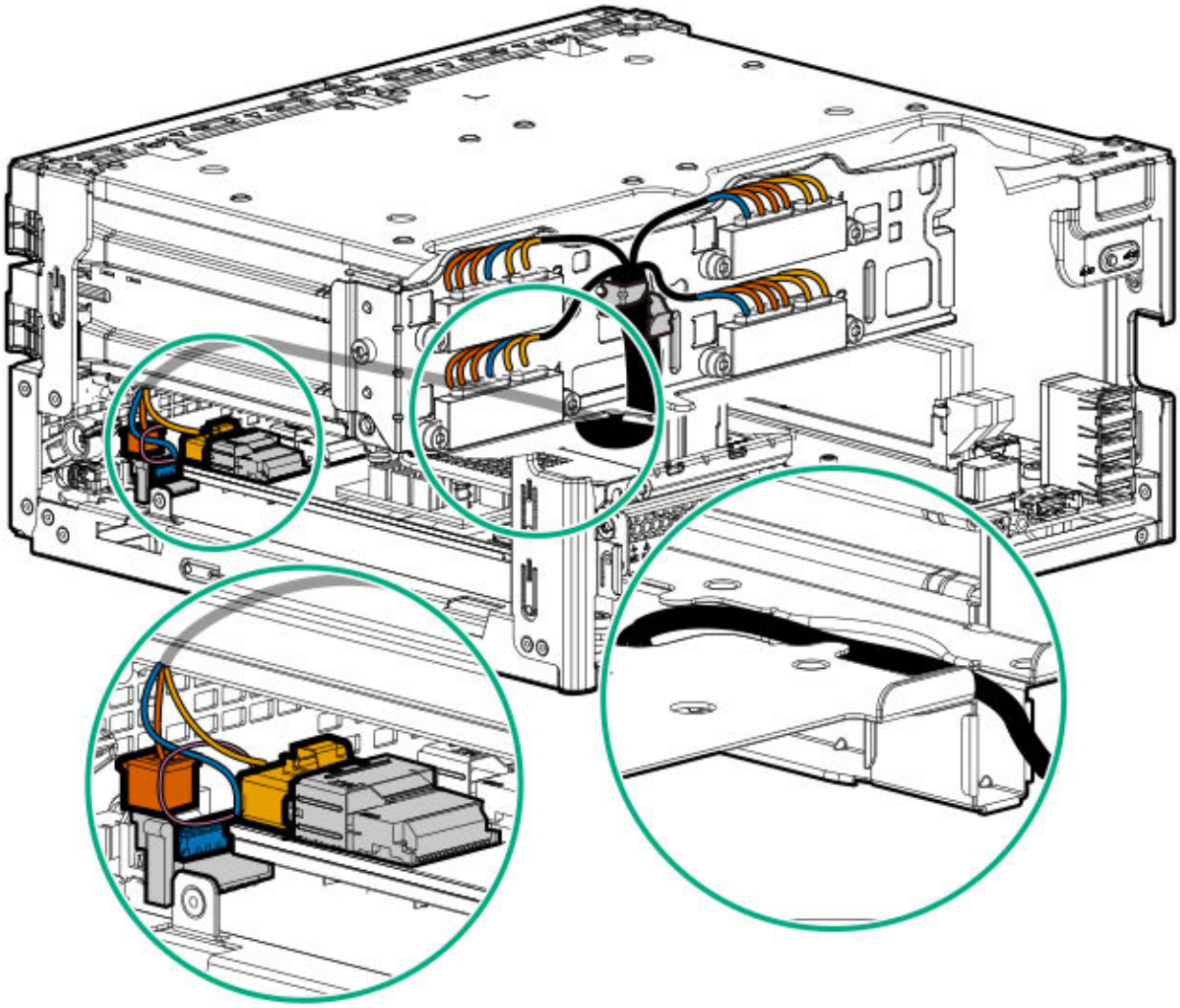

Color	Description
Orange	Drive power cable
Blue	Drive sideband signal cable
Gold	Drive data cable

Color	Description
Pink	Ambient temperature sensor cable

Fan cabling

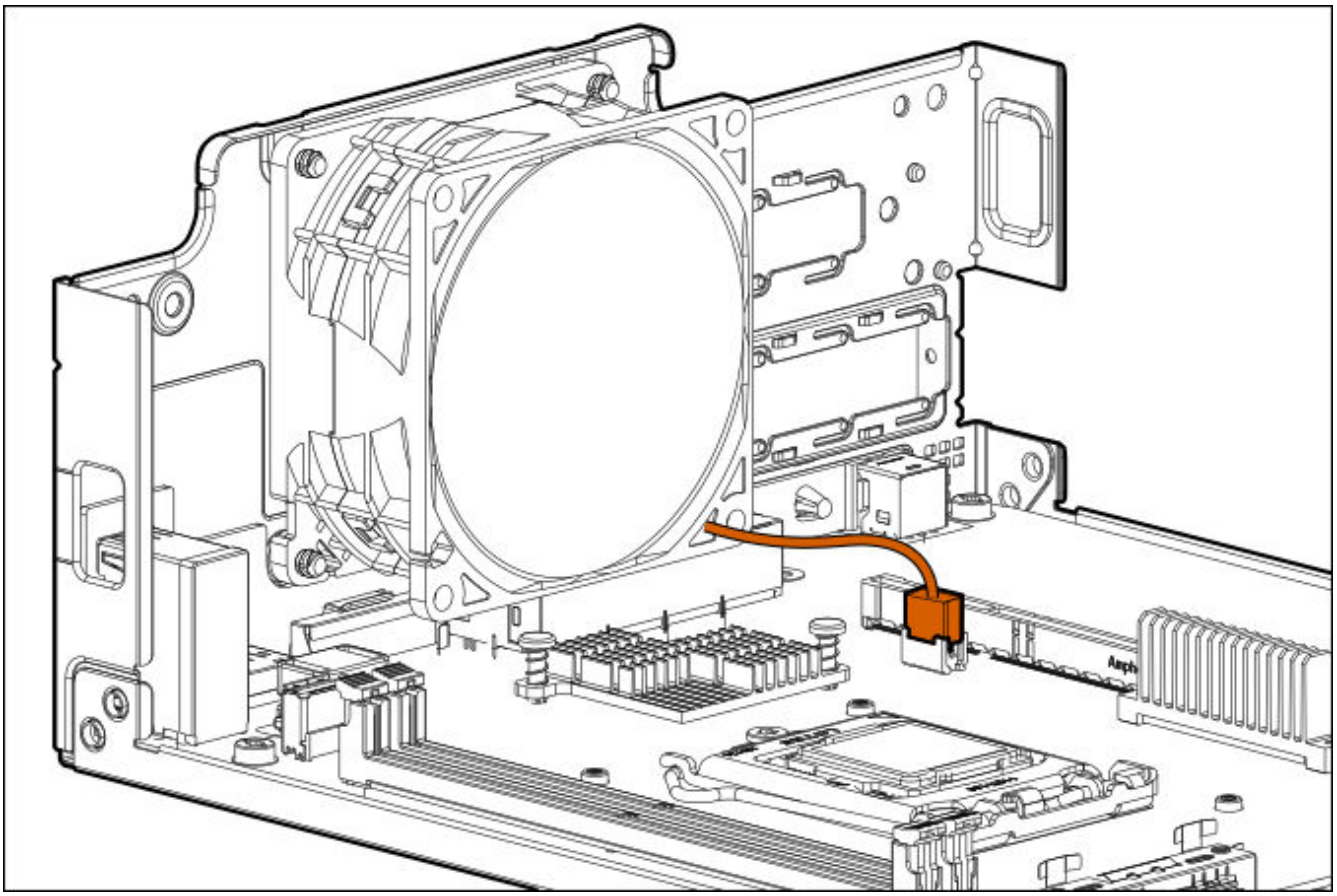

Configuration resources

Use the following resources to find documentation for configuring and managing your server.

- Some utilities might not apply to your server. For information about server compatibility with the products listed in this chapter, see the product QuickSpecs (**https://www.hpe.com/servers/microserver-gen10-plus-v2**).

- Products ordered from HPE Factory Express might have already been configured with some or all the configurations in this chapter. To determine if any additional setup is required, see your HPE Factory Express order.
- For the most recent changes, feature enhancements, and bug fixes, see the latest product release notes.

Subtopics

Updating firmware or system ROM
Configuring the server
Configuring storage controllers
Deploying an OS
Configuring security
Optimizing the server
Server management
Managing Linux-based high performance compute clusters

Updating firmware or system ROM

To	Use
Download service packs	Service Pack for ProLiant (SPP) **https://www.hpe.com/servers/spp/download**
Deploy service packs to a single server	Smart Update Manager (SUM) **https://www.hpe.com/info/sum-docs**
Deploy service packs to multiple servers	HPE OneView **https://www.hpe.com/support/oneview-docs**
• Enable policy-based management of server or se rver group firmware for distributed server infrast ructure • Monitor server compliance with a configured fir mware baseline • Receive automatic iLO firmware updates • Receive baseline update alerts	HPE GreenLake for Compute Ops Management **https://www.hpe.com/info/com-docs**

Configuring the server

To configure	Use
Single server (GUI)	• Intelligent Provisioning **https://www.hpe.com/info/intelligentprovisioning/docs** • iLO remote console or web interface **https://www.hpe.com/support/ilo5** • UEFI System Utilities **https://www.hpe.com/info/UEFI-manuals** • HPE GreenLake for Compute Ops Management **https://www.hpe.com/info/com-docs**
Single server (scripting)	• RESTful Interface Tool **https://www.hpe.com/support/restfulinterface/docs** • Python iLO Redfish Library (python-ilorest-library) **https://github.com/HewlettPackard/python-ilorest-library** • Scripting Tools for Windows Powershell **https://www.hpe.com/info/powershell/docs** • iLO RESTful API **https://hewlettpackard.github.io/ilo-rest-api-docs/ilo5/** • HPE GreenLake for Compute Ops Management API **https://developer.greenlake.hpe.com/**

To configure	Use
Multiple servers (either UI or scripting)	• HPE OneView [1] **https://www.hpe.com/support/oneview-docs** • HPE GreenLake for Compute Ops Management **https://www.hpe.com/info/com-docs** ◦ **Server settings:** Define server-specific para meters such as firmware baselines, and then apply them to server groups. ◦ **Server groups:** Organize servers into custo m-defined sets with associated server settin gs, and then apply group-specific policies to create a consistent configuration across the servers in the group.

[1] For servers running HPE OneView, do not use another tool, such as iLO, to delete or change certain settings. For more information about using HPE OneView and iLO to manage the same server, see the iLO user guide at **https://www.hpe.com/support/ilo5**.

Configuring storage controllers

Controller type	Documentation
SR controllers	—
Gen10 Plus	HPE SR Gen10 Plus Controller User Guide **https://www.hpe.com/info/SR-Gen10Plus-UG**
Gen10	HPE Smart Array SR Controller Gen10 User Guide **https://www.hpe.com/support/SR-Gen10-UG**
Cross-generation SR guides	• HPE SR Storage Administrator User Guide **https://www.hpe.com/support/SSA-UG**

Controller type	Documentation
	• HPE SR Storage Administrator CLI User Guide **https://www.hpe.com/support/SSA-UG**
Intel Virtual RAID on CPU	—
Intel VROC for HPE Gen10 Plus	OS-specific Intel VROC user guide **https://www.hpe.com/support/IntelVROC-Gen10Plus-docs**

Deploying an OS

For a list of supported operating systems, see the HPE Servers Support & Certification Matrices:

https://www.hpe.com/support/Servers-Certification-Matrices

To	See
Configure the server to boot from a SAN	HPE Boot from SAN Configuration Guide **https://www.hpe.com/info/boot-from-san-config-guide**
Configure the server to boot from a PXE server	UEFI System Utilities User Guide for HPE ProLiant Gen10, Proliant Gen10 Plus Servers and HPE Synergy **https://www.hpe.com/support/UEFIGen10-UG-en**
Deploy an OS using iLO virtual media	iLO user guide **https://www.hpe.com/support/ilo5**
Deploy an OS using Intelligent Provisioning	Intelligent Provisioning user guide **https://www.hpe.com/info/intelligentprovisioning/docs**

Configuring security

To	See
Implement server security best practices.	• HPE Gen10, Gen10 Plus, and Gen11 Security Reference Guide **https://www.hpe.com/info/server-security-reference-en** • HPE iLO 5 Security Technology Brief **https://www.hpe.com/support/ilo5-security-en**
Configure and use the Server Configuration Lock feature on HPE Trusted Supply Chain servers and other servers that have the Server Configuration Lock feature enabled.	Server Configuration Lock User Guide for HPE ProLiant Gen10, Gen10 Plus, and Gen11 servers and HPE Synergy **https://www.hpe.com/info/server-config-lock-UG-en**

Optimizing the server

To	See
Optimize server performance through management and tuning features.	HPE Server Performance Management and Tuning Guide **https://www.hpe.com/info/server-performance-management-tuning-en**
Obtain recommendations for resolving incorrect settings.	HPE InfoSight for Servers User Guide **https://www.hpe.com/support/InfoSight-for-Servers-UG-en**

Server management

To monitor	See
Single server	HPE iLO **https://www.hpe.com/support/ilo5**
Multiple servers	HPE OneView **https://www.hpe.com/support/oneview-docs**
Single or multiple servers	HPE GreenLake for Compute Ops Management **https://www.hpe.com/info/com-docs**

Managing Linux-based high performance compute clusters

To	Use
Provision, manage, and monitor clusters.	HPE Performance Cluster Manager **https://www.hpe.com/support/hpcm_manuals**
Optimize your applications.	HPE Performance Analysis Tools **https://www.hpe.com/info/perftools**
Optimize software library for low latency and high bandwidth, both on-node and off-node, for point-to-point and collective communications.	HPE Cray Programming Environment User Guide **https://www.hpe.com/info/cray-pe-user-guides**

Troubleshooting

Subtopics

NMI functionality
Troubleshooting resources

NMI functionality

An NMI crash dump enables administrators to create crash dump files when a system is not responding to traditional debugging methods.

An analysis of the crash dump log is an essential part of diagnosing reliability problems, such as hanging operating systems, device drivers, and applications. Many crashes freeze a system, and the only available action for administrators is to cycle the system power. Resetting the system erases any information that could support problem analysis, but the NMI feature preserves that information by performing a memory dump before a hard reset.

To force the OS to initiate the NMI handler and generate a crash dump log, the administrator can use the iLO Generate NMI feature.

Troubleshooting resources

Troubleshooting resources are available for HPE Gen10 and Gen10 Plus server products in the following documents:

- Troubleshooting Guide for HPE ProLiant Gen10 and Gen10 Plus servers provides procedures for resolving common problems and comprehensive courses of action for fault isolation and identification, issue resolution, and software maintenance.
- Integrated Management Log Messages and Troubleshooting Guide for HPE ProLiant Gen10 and Gen10 Plus servers and HPE Synergy provides IML messages and associated troubleshooting information to resolve critical and cautionary IML events.

To access troubleshooting resources for your product, see the **Hewlett Packard Enterprise website**.

System battery replacement

If the server no longer automatically displays the correct date and time, then replace the battery that provides power to the real-time clock. Under normal use, battery life is 5–10 years.

Subtopics

System battery information
Removing and replacing the system battery

System battery information

The server contains an internal lithium manganese dioxide, a vanadium pentoxide, or an alkaline battery that provides power to the real-time clock.

WARNING:
If this battery is not properly handled, a risk of the fire and burns exists. To reduce the risk of personal injury:

- Do not attempt to recharge the battery.
- Do not expose the battery to temperatures higher than 60°C (140°F).
- Do not expose the battery to extremely low air pressure as it might lead to explosion or leakage of flammable liquid or gas.
- Do not disassemble, crush, puncture, short external contacts, or dispose the battery in fire or water.

Removing and replacing the system battery

Prerequisites

Before you perform this procedure, make sure that you have a small flat-bladed, nonconductive tool available.

About this task

Procedure

1. Power down the server.
2. Disconnect the power cord from the AC source.
3. Remove the power adapter cord from the power cord clamp, and then disconnect the power adapter from the server.
4. Disconnect all peripheral cables from the server.
5. If the server is in a vertical orientation, position the server in a horizontal orientation.

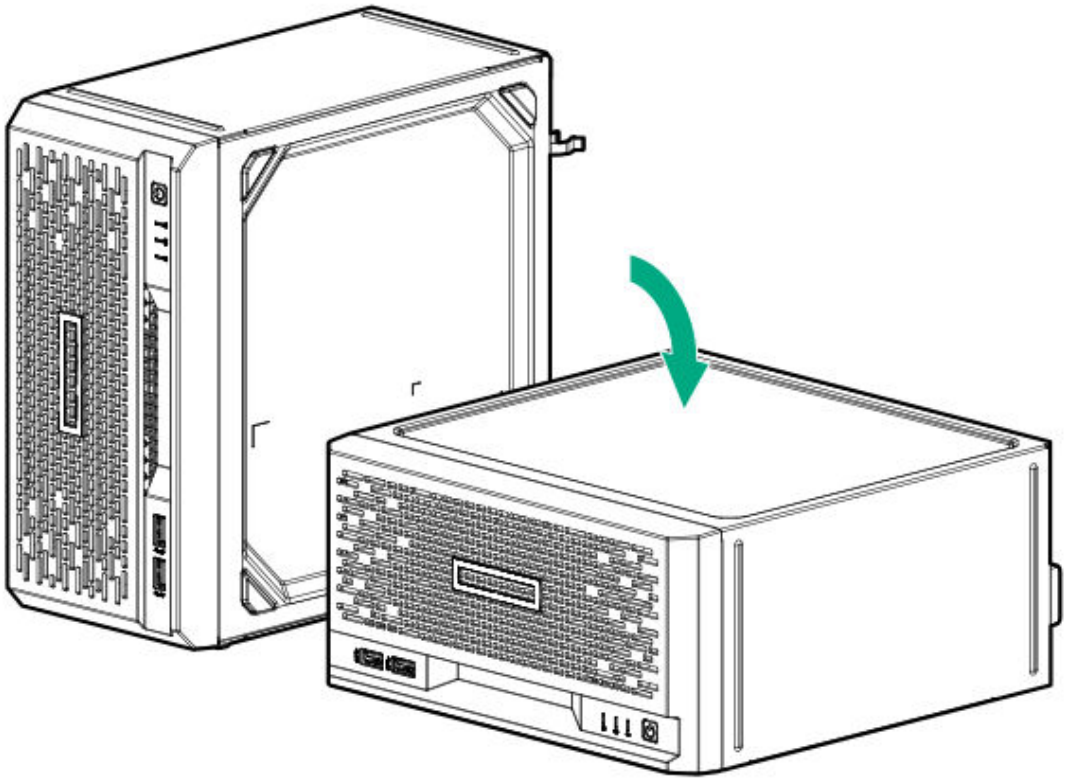

6. Remove the chassis cover.
7. Remove the system board assembly.
8. Locate the battery on the system board.
9. Remove the system battery:
   a. Use a small flat-bladed, nonconductive tool to press the battery latch (callout 1).
   b. Remove the system battery from the socket (callout 2).

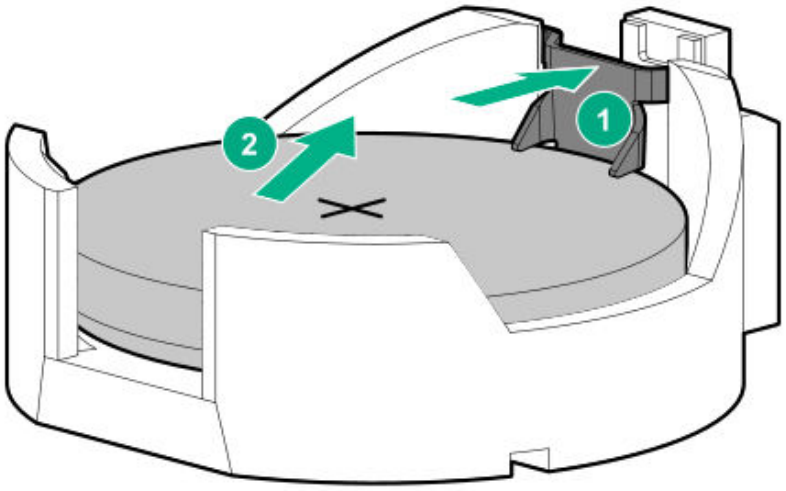

.0. Install the system battery:

a. With the side of the battery showing the "+" sign facing up, insert the battery into the socket (callout 1).

b. Press the system battery down until it clicks into place (callout 2).

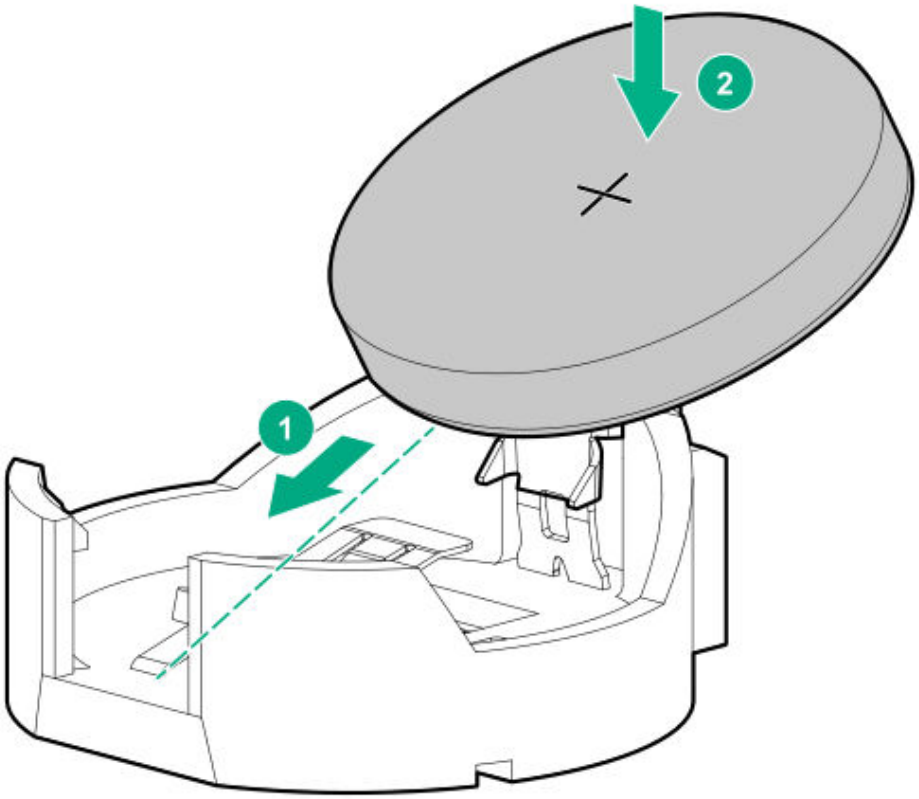

1. Install the system board assembly.
2. Install the chassis cover.
3. If removed, install the security padlock and/or the Kensington security lock.

   For more information, see the lock documentation.
4. Connect all peripheral cables to the server.
5. Connect the power adapter to the server, and then secure the power adapter cord in the power cord clamp.
6. Connect the power cord to the AC source.
7. Power up the server.
8. Properly dispose of the old battery.

   For more information about proper battery disposal, contact an authorized reseller or an authorized service provider.

Safety, warranty, and regulatory information

Subtopics

Regulatory information
Warranty information

Regulatory information

To view the regulatory information for your product, view the Safety and Compliance Information for Server, Storage, Power, Networking, and Rack Products, available at the Hewlett Packard Enterprise Support Center:

https://www.hpe.com/support/Safety-Compliance-EnterpriseProducts

Additional regulatory information

Hewlett Packard Enterprise is committed to providing our customers with information about the chemical substances in our products as needed to comply with legal requirements such as REACH (Regulation EC No 1907/2006 of the European Parliament and the Council). A chemical information report for this product can be found at:

https://www.hpe.com/info/reach

For Hewlett Packard Enterprise product environmental and safety information and compliance data, including RoHS and REACH, see:

https://www.hpe.com/info/ecodata

For Hewlett Packard Enterprise environmental information, including company programs, product recycling, and energy efficiency, see:

https://www.hpe.com/info/environment

Subtopics

VCCI-B notice for products that comply with CISPR 32
Notices for Eurasian Economic Union
Turkey RoHS material content declaration
Ukraine RoHS material content declaration

VCCI-B notice for products that comply with CISPR 32

この装置は、クラスＢ機器です。この装置は、住宅環境で使用することを目的としていますが、この装置がラジオやテレビジョン受信機に近接して使用されると、受信障害を引き起こすことがあります。

取扱説明書に従って正しい取り扱いをして下さい。

VCCI-B

Notices for Eurasian Economic Union

EAC

Manufacturer and Local Representative Information

Manufacturer information:

Hewlett Packard Enterprise Company, 1701 E Mossy Oaks Road, Spring, TX 77389 U.S.

Local representative information Russian:

- **Russia**

ООО "Хьюлетт Паккард Энтерпрайз", Российская Федерация, 125171, г. Москва, Ленинградское шоссе, 16А, стр.3, Телефон: +7 499 403 4248 Факс: +7 499 403 4677

- **Kazakhstan**
  ТОО «Хьюлетт-Паккард (К)», Республика Казахстан, 050040, г. Алматы, Бостандыкский район, проспект Аль-Фараби, 77/7, Телефон/факс: + 7 727 355 35 50

Local representative information Kazakh:

- **Russia**
  ЖШС "Хьюлетт Паккард Энтерпрайз", Ресей Федерациясы, 125171, Мәскеу, Ленинград тас жолы, 16А блок 3, Телефон: +7 499 403 4248 Факс: +7 499 403 4677

- **Kazakhstan**
  ЖШС «Хьюлетт-Паккард (К)», Қазақстан Республикасы, 050040, Алматы к., Бостандык ауданы, Әл-Фараби даңғ ылы, 77/7, Телефон/факс: +7 727 355 35 50

Manufacturing date:

The manufacturing date is defined by the serial number.

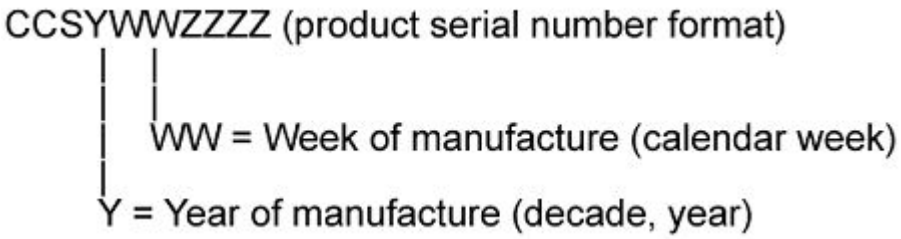

If you need help identifying the manufacturing date, contact **tre@hpe.com**.

Turkey RoHS material content declaration

Türkiye Cumhuriyeti: AEEE Yönetmeliğine Uygundur

Ukraine RoHS material content declaration

Обладнання відповідає вимогам Технічного регламенту щодо обмеження використання деяких небезпечних речовин в електричному та електронному обладнанні, затвердженого постановою Кабінету Міністрів України від 3 грудня 2008 № 1057

Warranty information

To view the warranty information for your product, see the **warranty check tool**.

Specifications

Subtopics

Environmental specifications
Mechanical specifications

Environmental specifications

Specifications	Value
Temperature range*	—
Operating	10°C to 35°C (50°F to 95°F)
Nonoperating	-30°C to 60°C (-22°F to 140°F)
Relative humidity (noncondensing)	—
Operating	8% to 90% 28°C (82.4°F) maximum wet bulb temperature
Nonoperating	5 to 95%

Specifications	Value
	38.7°C (101.7°F) maximum wet bulb temperature
Altitude	—
Operating	3050 m (10,000 ft). This value may be limited by the type and number of options installed. Maximum allowable altitude change rate is 457 m /min (1500 ft/min).
Nonoperating	9144 m (30,000 ft). Maximum allowable altitude change rate is 457 m /min (1500 ft/min).

Standard operating support

10°C to 35°C (50°F to 95°F) at sea level with an altitude derating of 1.0°C per every 305 m (1.8°F per every 1000 ft) above sea level to a maximum of 3050 m (10,000 ft), no direct sustained sunlight. Maximum rate of change is 20°C/hr (36°F/hr). The upper limit and rate of change may be limited by the type and number of options installed.

System performance during standard operating support may be reduced if operating above 30°C (86°F).

Extended ambient operating support

For approved hardware configurations, the supported system inlet range is extended to be:

- 5°C to 10°C (41°F to 50°F) and 35°C to 40°C (95°F to 104°F) at sea level with an altitude derating of 1.0°C per every 175 m (1.8°F per every 574 ft) above 900 m (2953 ft) to a maximum of 3050 m (10,000 ft).
- 40°C to 45°C (104°F to 113°F) at sea level with an altitude derating of 1.0°C per every 125 m (1.8°F per every 410 ft) above 900 m (2953 ft) to a maximum of 3050 m (10,000 ft).

The approved hardware configurations for this system are listed on the Extended Ambient Temperature Guidelines for Gen10 Plus HPE ProLiant and HPE Apollo servers and HPE Synergy:

https://www.hpe.com/support/ASHRAEGen10_Plus

System performance might be reduced if operating in the extended ambient operating range.

Mechanical specifications

Dimension	Value
Height	11.89 cm (4.68 in)
Depth	24.50 cm (9.65 in)

Dimension	Value
Width	24.50 cm (9.65 in)
Weight, minimum (one drive and one DIMM installed, no iLO enablement module or expansion card installed)	4.82 kg (10.63 lb)
Weight, maximum (four drives, two DIMMs, iLO enablement module, and an expansion card installed)	7.20 kg (15.87 lb)

Websites

General websites

Single Point of Connectivity Knowledge (SPOCK) Storage compatibility matrix

https://www.hpe.com/storage/spock

Product white papers and analyst reports

https://www.hpe.com/us/en/resource-library

For additional websites, see Support and other resources.

Product websites

HPE ProLiant MicroServer Gen10 Plus v2 product page

https://www.hpe.com/servers/microserver-gen10-plus-v2

HPE ProLiant MicroServer Gen10 Plus v2 user documents

https://www.hpe.com/info/microservergen10plusv2-docs

Support and other resources

Subtopics

Accessing Hewlett Packard Enterprise Support
Accessing updates
Customer self repair
Remote support
Documentation feedback

Accessing Hewlett Packard Enterprise Support

- For live assistance, go to the Contact Hewlett Packard Enterprise Worldwide website:

  https://www.hpe.com/info/assistance

- To access documentation and support services, go to the Hewlett Packard Enterprise Support Center website:

  https://www.hpe.com/support/hpesc

Information to collect

- Technical support registration number (if applicable)
- Product name, model or version, and serial number
- Operating system name and version
- Firmware version
- Error messages
- Product-specific reports and logs
- Add-on products or components
- Third-party products or components

Accessing updates

- Some software products provide a mechanism for accessing software updates through the product interface. Review your product documentation to identify the recommended software update method.
- To download product updates:

  Hewlett Packard Enterprise Support Center

  https://www.hpe.com/support/hpesc

  My HPE Software Center

  https://www.hpe.com/software/hpesoftwarecenter

- To subscribe to eNewsletters and alerts:

  https://www.hpe.com/support/e-updates

- To view and update your entitlements, and to link your contracts and warranties with your profile, go to the Hewlett Packard Enterprise Support Center **More Information on Access to Support Materials** page:

  https://www.hpe.com/support/AccessToSupportMaterials

> **IMPORTANT:**
> Access to some updates might require product entitlement when accessed through the Hewlett Packard Enterprise Support Center. You must have an HPE Account set up with relevant entitlements.

Customer self repair

Hewlett Packard Enterprise customer self repair (CSR) programs allow you to repair your product. If a CSR part needs to be replaced, it will be shipped directly to you so that you can install it at your convenience. Some parts do not qualify for CSR.

For more information about CSR, contact your local service provider.

Remote support

Remote support is available with supported devices as part of your warranty or contractual support agreement. It provides intelligent event diagnosis, and automatic, secure submission of hardware event notifications to Hewlett Packard Enterprise, which initiates a fast and accurate resolution based on the service level of your product. Hewlett Packard Enterprise strongly recommends that you register your device for remote support.

If your product includes additional remote support details, use search to locate that information.

HPE Get Connected

https://www.hpe.com/services/getconnected

HPE Tech Care Service

https://www.hpe.com/services/techcare

HPE Complete Care

https://www.hpe.com/services/completecare

Documentation feedback

Hewlett Packard Enterprise is committed to providing documentation that meets your needs. To help us improve the documentation, use the **Feedback** button and icons (at the bottom of an opened document) on the Hewlett Packard Enterprise Support Center portal (**https://www.hpe.com/support/hpesc**) to send any errors, suggestions, or comments. This process captures all document information.