HPE ProLiant MicroServer Gen10 - Product Information Reference

Part Number:
Published:
Edition:

HPE ProLiant MicroServer Gen10 - Product Information Reference

Abstract

Part Number:
Published:
Edition:

© Copyright –

Notices

The information contained herein is subject to change without notice. The only warranties for Hewlett Packard Enterprise products and services are set forth in the express warranty statements accompanying such products and services. Nothing herein should be construed as constituting an additional warranty. Hewlett Packard Enterprise shall not be liable for technical or editorial errors or omissions contained herein.

Confidential computer software. Valid license from Hewlett Packard Enterprise required for possession, use, or copying. Consistent with FAR 12.211 and 12.212, Commercial Computer Software, Computer Software Documentation, and Technical Data for Commercial Items are licensed to the U.S. Government under vendor's standard commercial license.

Links to third-party websites take you outside the Hewlett Packard Enterprise website. Hewlett Packard Enterprise has no control over and is not responsible for information outside the Hewlett Packard Enterprise website.

Acknowledgments

Intel®, Itanium®, Optane™, Pentium®, Xeon®, Intel Inside®, and the Intel Inside logo are trademarks of Intel Corporation in the U.S. and other countries.

AMD and the AMD EPYC™ and combinations thereof are trademarks of Advanced Micro Devices, Inc.

Microsoft® and Windows® are either registered trademarks or trademarks of Microsoft Corporation in the United States and/or other countries.

Adobe® and Acrobat® are trademarks of Adobe Systems Incorporated.

Java® and Oracle® are registered trademarks of Oracle and/or its affiliates.

UNIX® is a registered trademark of The Open Group.

All third-party marks are property of their respective owners.

Revision history

Part number	Publication date	Edition	Summary of changes

Table of contents

Overview

- Summary 6
  - Product description 6
  - What's new 6
- Standard Models 7
  - New RoHS compliant part numbers 7
  - Standard models 7
- Product features 9

Specifications

- Specifications 13
  - Physical specifications 13
  - Electrical specifications 13
  - Environmental specifications 14
  - Safety certifications 16

Compatibility/Supportability

- Spare Parts 16
  - New model specific parts lists 16
  - System components 17
  - Server options 19
- Option Parts 21
  - New model specific parts lists 22
  - Unique options 22
  - Memory 23
  - Optical drives 23
  - Hard drives 23
  - Solid State Drives (SSD) 24
  - Networking 25
  - Computation and graphics accelerators 25
  - Security 25
  - Smart Array controllers 25
  - Disk backup 26
  - Rack mount consoles, KVM switches, and keyboards 26
- OS Compatibility 26

Useful Links.....27

Summary

Subtopics

Product description
What's new

Product description



HPE ProLiant MicroServer Gen10 is a compact and uniquely designed server that is ideal for small and home offices looking to build the first IT server environment with a form factor that is easy to use. HPE MicroServer Gen10 helps businesses to provide better and easy access to data, more efficiency in operations, while driving down the operating expenses.

What's new

New option kits support

- AMD Radeon Pro WX 2100 graphics card

- HPE Smart Array E208i-p SR Gen10 controller
- HPE Ethernet 10Gb 2-Port 521T Adapter
- HPE 240GB SATA Read-Intensive (RI) SFF raw SSD

New operating systems (OS) support

- Red Hat Enterprise Linux 7.4

Standard Models

Subtopics

New RoHS compliant part numbers
Standard models

New RoHS compliant part numbers

To find the latest RoHS compliance information, please use the HPE PartSurfer (**Click here to visit HPE PartSurfer website**) and click on one of the linked model numbers. When locating RoHS information in PartSurfer, user can use the Option part number for the components, the sales order number for a system that the component is used in, or the Spare part number for a specific part. User can find the sales order numbers and Option part numbers in the Product QuickSpecs.

Standard models

Description	Model Number
WW Entry BTO model	
HPE ProLiant MicroServer Gen10 X3216 8GB-U 1T B 4-Large Form Factor (LFF) Non-Hot-Plug (NHP) SATA 200 W Power Supply (PS) entry US server	870208-001 **Click here to obtain parts list for this model**.
HPE ProLiant MicroServer Gen10 X3216 8GB-U 1T B 4-LFF NHP SATA 200 W PS entry JP server	870208-291 **Click here to obtain parts list for this model**.

Description	Model Number
HPE ProLiant MicroServer Gen10 X3216 8GB-U 1T B 4-LFF NHP SATA 200 W PS entry AP server	870208-371 **Click here to obtain parts list for this model**.
HPE ProLiant MicroServer Gen10 X3216 8GB-U 1T B 4-LFF NHP SATA 200 W PS entry EU server	870208-421 **Click here to obtain parts list for this model**.
HPE ProLiant MicroServer Gen10 X3216 8GB-U 1T B 4-LFF NHP SATA 200 W PS entry CN server	870208-AA1 **Click here to obtain parts list for this model**.
Entry models	
HPE ProLiant MicroServer Gen10 X3216 1P 8GB-U 4-LFF NHP SATA 200 W PS entry server	873830-001 **Click here to obtain parts list for this model**.
HPE ProLiant MicroServer Gen10 X3216 1P 8GB-U 4-LFF NHP SATA 200 W PS entry JP server	873830-291 **Click here to obtain parts list for this model**.
HPE ProLiant MicroServer Gen10 X3216 1P 8GB-U 4-LFF NHP SATA 200 W PS entry AP server	873830-375 **Click here to obtain parts list for this model**.
HPE ProLiant MicroServer Gen10 X3216 1P 8GB-U 4-LFF NHP SATA 200 W PS entry EU/UK server	873830-421 **Click here to obtain parts list for this model**.
HPE ProLiant MicroServer Gen10 X3216 1P 8GB-U 4-LFF NHP SATA 200 W PS entry AMS server	873830-S01 **Click here to obtain parts list for this model**.
Performance models	
HPE ProLiant MicroServer Gen10 X3418 1P 8GB-U 4-LFF-NHP 200 W PS performance server	P07203-001 **Click here to obtain parts list for this model**.
HPE ProLiant MicroServer Gen10 X3418 1P 8GB-U 4-LFF-NHP 200 W PS performance JP server	P07203-291 **Click here to obtain parts list for this model**.
HPE ProLiant MicroServer Gen10 X3418 1P 8GB-U 4-LFF-NHP 200 W PS performance AP server	P07203-375 **Click here to obtain parts list for this model**.
HPE ProLiant MicroServer Gen10 X3418 1P 8GB-U 4-LFF-NHP 200 W PS performance EU/UK server	P07203-421

Description	Model Number
	Click here to obtain parts list for this model.
HPE ProLiant MicroServer Gen10 X3418 1P 8GB-U 4-LFF-NHP 200 W PS performance AMS server	P07203-S01 **Click here to obtain parts list for this model**.
Solution models	
HPE ProLiant MicroServer Gen10 X3421 3.4 GHz 4 -core 1P 8GB-U 4LFF-NHP 200 W PS solution serve r	P04923-001 **Click here to obtain parts list for this model**.
HPE ProLiant MicroServer Gen10 X3421 3.4 GHz 4 -core 1P 8GB-U 4-LFF NHP SATA 200 W PS solution JP server	P04923-291 **Click here to obtain parts list for this model**.
HPE ProLiant MicroServer Gen10 X3421 3.4 GHz 4 -core 1P 8GB-U 4-LFF NHP SATA 200 W PS solution AP server	P04923-375 **Click here to obtain parts list for this model**.
HPE ProLiant MicroServer Gen10 X3421 3.4 GHz 4 -core 1P 8GB-U 4-LFF NHP SATA 200 W PS solution EU/UK server	P04923-421 **Click here to obtain parts list for this model**.
HPE ProLiant MicroServer Gen10 X3421 3.4 GHz 4 -core 1P 8GB-U 4-LFF NHP SATA 200 W PS solution AMS server	P04923-S01 **Click here to obtain parts list for this model**.

NOTE:

Country code key:

- S01, 001 - Americas
- 291 - Japan
- 375 - AP
- 421 - EMEA
- AA1 - China

Product features

Feature	Description	
Processor	• AMD Opteron X3216 processor (1.6 - 3.0 GHz / 2 compute cores / 4 g raphic cores / 1MB / 12 - 15 W) • AMD Opteron X3421 processor (2.1 - 3.4 GHz / 4 compute cores / 8 g raphic cores / 2MB / 12 - 35 W)	
Cache memory	• **For X3421 and X3418 processor:** 2MB (1 x 2MB) L2 cache • **For X3216 processor:** 1MB (1 x 1MB) L2 cache	
Memory protection	ECC	
Memory	**Type**	HPE Standard memory DDR4 unbuffered (U DIMM)
	DIMM slots available	2
	Standard	8GB (1 x 8GB) PC4-2400T DDR4 UDIMM
	Maximum	32GB (2 x 16GB) PC4-2400T DDR4 UDIMM

NOTE:

- HPE memory from previous generation servers are not f ully compatible with the HPE ProLiant MicroServer Gen 10.
- Only the SKUs with X3421 processor support memory s peed up to 2400 MT/s.
- SKUs with X3216 processor only support up to 1600 M T/s memory speed.

Network controller	Embedded Broadcom BCM5720 dual port Gbe LOM

Expansion slots

Expansion Slot	Technology	Bus Width	Connector Width	Form Facto r	Notes
1	PCIe 3.0	X8	X8	Low profile	Open-end connector to support

Feature	Description					
	Expansion Slot	**Technology**	**Bus Width**	**Connector Width**	**Form Factor**	**Notes**
						up to x16 PCIe card
	2	PCIe 3.0	X1	X4	Low profile	Open-end connector to support up to x16 PCIe card
Storage controller	The Gen10 controller naming framework has been updated to simplify identification as depicted below.					
	Embedded storage controller	**Marvell 88SE9230 PCIe to SATA 6Gb/s controller** **NOTE:** **Supports RAID 0/1/10 only. No FBWC support.**				
	Essential RAID controller	HPE Smart Array E208i-p SR Gen10 controller **NOTE:** Supports RAID 0/1/5/10. No FBWC support.				
Internal storage devices	**Optical drive**	• Optional: SATA DVD-RW drive • Optional: SATA SSD				
	Hard drives	None ship standard				
	Solid State Drives (SSD)	None ship standard				

Feature	Description	
Maximum internal storage	**Non-hot plug SATA**	16TB (4 x 4TB) 3.5 in SATA
Interfaces	**Video**	• 1 Rear VGA port • 2 Rear display ports 1.2
	USB 2.0 ports	3 total (2 rear, 1 internal)
	USB 3.0 ports	4 total (2 rear, 2 front)
	Network RJ-45 (Ethernet) 2	
Industry standardcompliance	• ACPI V5.0 compliant • PCIe 3.0 compliant • PXE support • WOL support • EMC class B • USB 2.0 • USB 3.0 • SATA 6 Gb/s	
System fans	One (1) non-redundant system fan shipped standard.	
Form factor	Ultra micro tower.	
Service and support	HPE pointnext for industry standard servers: HPE Pointnext delivers confidence, reduces risk and helps users realize agili ty and stability. Its support technology lets user to tap into the knowledge of millions of devices and thousands of experts to stay informed and in control, anywhere, any time. Protect user business beyond warranty with HPE packaged support servic es: HPE packaged support services enable users to order the right service level, length of coverage and response time for the new server purchased, giving f ull entitlement for the term selected.	

Specifications

Subtopics

Physical specifications
Electrical specifications
Environmental specifications
Safety certifications

Physical specifications

Specification	Description
Dimensions (H x W x D):	23.5 x 23.0 x 25.4 cm (9.25 x 9.06 x 10.00 in)
Weight	Maximum: 9.70 kg (21.36 lb) Minimum: 6.50 kg (14.32 lb)

Electrical specifications

Specification	Description
Input requirements	
Rated line voltage	100 V ac to 240 V ac
Rated input current	3.5 A (At 100 V ac)
Rated input frequency	50 to 60 Hz
Server power cords	All pre-configured servers ship with a standard 6 -foot IEC C-13/C-14 jumper cord (A0K02A). This ju mper cord is also included with each standard AC po wer supply option kit.
Rated input power	• 200 W - Power supply

Specification	Description
	• 244 W (At 115 V ac)
Power supply	One (1) 200 W non-hot plug, non-redundant power supply
Rated steady-state power	• 200 W power supply • 200 W (At 100 V ac) • 200 W (At 200 V ac)
Maximum peak power	• 200 W power supply • 200 W (At 100 V ac) • 200 W (At 200 V ac)

NOTE:

Click here to view the power requirements for the selected system.

Environmental specifications

Specification	Description
Operating temperature	10° to 35°C (50° to 95°F)
Operating relative humidity	10% to 90%
Non-operating relative humidity	5 to 95%
Operating altitude	3050 m (10,000 ft)
Non-operating altitude	9144 m (30,000 ft)
Acoustic noise	• Listed are the declared A-Weighted sound powe r levels (LWAd) and declared average by stander position A-Weighted sound pressure levels (LpA

Specification	Description
	m) when the product is operating in a 23°C ambient environment. • Noise emissions were measured in accordance with ISO 7779 (ECMA 74)and declared in accordance with ISO 9296 (ECMA 109).

Configuration	Lightly loaded	Heavily loaded
CPU type and quantity	AMD Opteron processor at 15 W cTDP x1	AMD Opteron processor at 35 W cTDP x1
DIMM type, capacity and quantity	8GB UDIMM 2400 MT/s x1	8GB UDIMM 2400 MT/s x1
HDD type and quantity	2.5-inch SFF NHP HDD 500GB x1	3.5-inch LFF NHP HDD 500 GB x4
Idle sound power level in Bels LWAd	3.8 Bels	4.0 Bels
Operating sound power level in Bels LWAd	3.8 Bels	4.0 Bels
Idle sound pressure level LpAm	26.0 dBA	30.4 dBA
Operating sound pressure level LpAm	26.0 dBA	31.0 dBA

NOTE:

- Acoustics levels presented here accounts for test configuration only and acoustics level will vary depending on system configuration .

Specification	Description
	• Values are subject to change wit hout notification and are for refe rence only.

Safety certifications

Specification	Description
Emissions Classification (EMC)	
FCC rating	Class B
Normative standards	CISPR32, EN55032, EN55024FCC CFR 47, Pt15, IC ES-003, CNS13438, GB9254K32, K24, EN61000-3 -2, EN61000-3-3

NOTE:

Product conformance to cited product specifications is based on sample (Type) testing, eva luation, or assessment. This product or family of products is eligible to bear the appropriate compliance logos and statements

Spare Parts

Subtopics

New model specific parts lists
System components
Server options

New model specific parts lists

IMPORTANT: To obtain current part number information for a specific product model, use the Standard Models page for this product family.

- The product Standard Models page now links the model SKU numbers to the spare parts list for each model found on the HPE PartSurfer web site. (To report missing or incorrect parts information in PartSurfer, please use the "Contact us" and "Missing or incorrect data" links within the PartSurfer web site utility).
- To look up RoHS-compliant information in PartSurfer, use the component's option part number or the sales order number for a system in which the component is used (Available in the QuickSpecs or Standard Models page).

System components

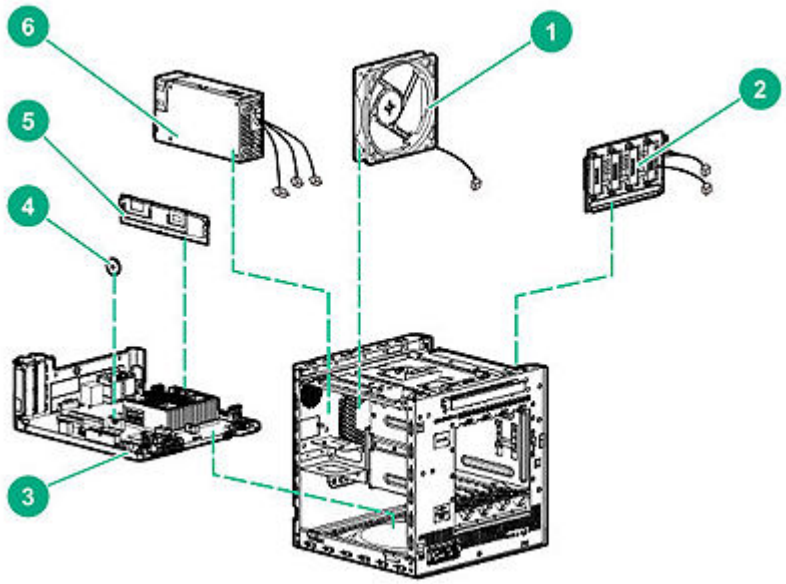

Item	Description	Spare Part Number
1	Fan MicroSever G10	874740-001
2	Four bay non-hot-plug drive cable assembly	
	CA NHP HDD BP Kit MicroSever G 10	874741-001
3	System board assembly	
	M/B X3216 MicroServer G10	874737-001

Item	Description	Spare Part Number
	M/B X3421 MicroServer G10	874738-001
4	System battery	
	Battery for Real-Time Clock (RTC) - 3.0 V, 220 mAh, lithium coin cell, 20 mm diameter, 3.2 mm height (C R2032)	319603-001
5	DIMM	
	8GB PC4-2400T-E unbuffered wit h ECC Synchronous Dynamic Rand om Access Memory (SDRAM) Dual Data Rate (DDR4) packaged in Du al In-line Memory Module (DIMM), 1Gx72	869537-001
	16GB PC4-2400T-E, unbuffered w ith ECC (Error correcting code) SD RAM, operated in a DDR4 mode, p ackaged in a DIMM, organized as 2 Gx72	869538-001
6	Power supply	
	Power supply 200 W MicroServer G10	874739-001

Server options

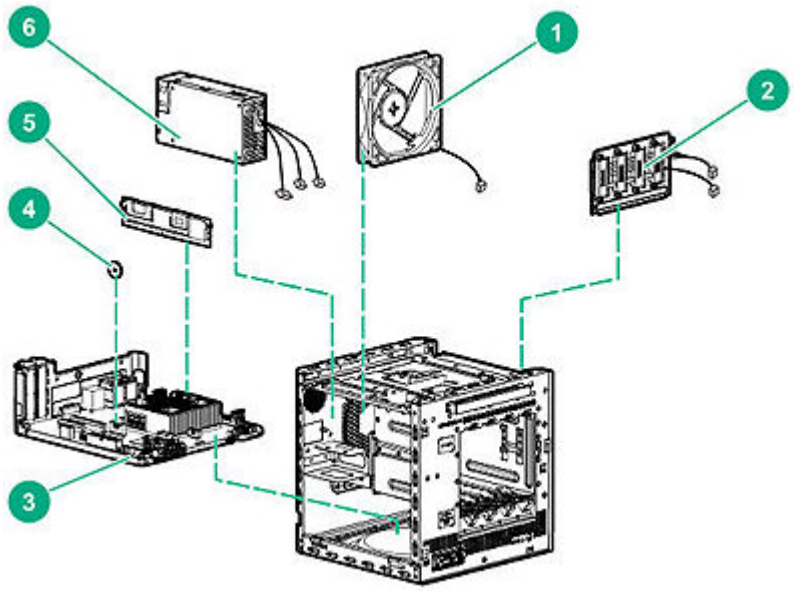

Item	Description	Spare Part Number
1	Optical drive	
	SATA DVD-ROM optical drive - 8X DVD-ROM read, 24X CD-ROM read, 9.5 mm (0.374 in) height	481430-001
	SATA DVD-RW optical drive (Jack black color) - 8X DVD-ROM read, 24X CD-ROM read, 9.5 mm (0.374 in) height	652297-001
2	Solid state drive	
	DRIVE SSD 240GB SFF SATA SFF RI DS RW	875654-001 Note:-Part 875654-001 is no longer supplied. Please order the replacement, P21515-001
3	LFF non-hot-plug hard drive	
	500GB SATA hard drive - 6 Gb/s transfer rate, 3.5 in Large Form Factor (LFF), non-hot-plug, entry 512e format	843394-001

Item	Description	Spare Part Number
	1TB SATA SSD drive - 6 Gb/s transfer rate,7,200 RPM, 3.5 in LFF, non-hot-plug, 512e format	843395-001
	1TB non-hot-plug SATA hard disk drive - 6 Gb/s transfer rate, 7,200 RPM, 3.5 in LFF, Midline (MDL)	659569-001
	2TB SATA drive - 6 Gb/s transfer rate,7,200 RPM, 3.5 in LFF, non-hot-plug, 512e format	843396-001
	2TB non-hot-plug SATA hard disk drive - 7,200 RPM, 6 Gb/s transfer rate, 3.5 in LFF, MDL	659570-001
	3TB SATA hard drive - 6 Gb/s transfer rate,7,200 RPM, 3.5 in LFF, non-hot-plug	843397-001
	4TB SATA non-hot plug hard drive - 5,900 RPM, 3.5 in LFF, 6 Gb/s interface, Entry (ETY), 512e format	815661-001
	4TB non-hot-plug SATA hard disk drive - 7,200 RPM, 6 Gb/s transfer rate, 3.5 in LFF, MDL	801925-001
4	Network controller	
	Ethernet 1Gb 2-port 332T adapter - Has two 10/100/1000BASE-T RJ45 ports - Requires one x1 (Gen 2) PCI express slot (Compatible with x1, x4, x8 and x16 PCI Express slots) - Requires CAT5 or better twisted-pair	616012-001
	Ethernet 1Gb 4-port 331T adapter - Has four 10/100/1000BASE-T RJ45 ports and 4Mb integrated buffer memory - Requires one x4 (Gen2) PCI express slot (Compatible with x8 and x16 PCI express slots) - Requires CAT5 or better twisted-pair	649871-001

Item	Description	Spare Part Number
	Ethernet 10Gb 2-port 521T ada pter	869573-001
5	Storage controller	
	Smart Array E208i-p SR controller - SAS/SATA interface, 8-SAS lanes across 2 x4 internal Mini-SAS por ts, No flash-backed write cache, 12 Gb/s SAS, 6 Gb/s SATA,PCI Express 3.0 x8 link, RAID 0, 1, 5, 10	836266-001
6	SSD cable	
	SSD power cable, SSD SATA cable	874742-001
7	RDX backup system	
	HP RDX (Removable disk backup System) 500GB cartridge	695145-001
	1TB Removable Disk Cartridge (R DX)	695146-001
	2TB (RDX) removable disk cartrid ge	759488-001
	External removable disk backup system - USB 3.0 interface, 5 1/ 4in large form factor (LFF), comp atible with RDX cartridges of any capacity	815082-001
8	Trusted Platform Module (TPM)	
	TPM 2.0 board - Plugs in socket o n the system I/O board - NOTE: Th is board is not user replaceable - It is attached to system board with a security rivet	812119-001

Option Parts

Subtopics

New model specific parts lists
Unique options
Memory
Optical drives
Hard drives
Solid State Drives (SSD)
Networking
Computation and graphics accelerators
Security
Smart Array controllers
Disk backup
Rack mount consoles, KVM switches, and keyboards

New model specific parts lists

IMPORTANT: To obtain current part number information for a specific product model, use the Standard Models page for this product family.

- The product Standard Models page now links the model SKU numbers to the spare parts list for each model found on the HPE PartSurfer web site. (To report missing or incorrect parts information in PartSurfer, please use the "Contact us" and "Missing or incorrect data" links within the PartSurfer web site utility.)
- To look up RoHS-Compliant information in PartSurfer, use the component's option part number or the sales order number for a system in which the component is used (Available in the QuickSpecs or Standard Models page).

Unique options

Part Description	Option Part Number
HPE MicroServer Gen10 SFF NHP SATA converter kit	870213-B21
HPE 240GB SATA 6G Read Intensive SFF RW PM883 SSD **Notes**: HPE MicroServer Gen10 Slim SFF SATA Enablement Kit (870212-B21) to accommodate this SFF SSD into the media bay.	P09685-B21

Memory

Part Description	Option Part Number
Unbuffered with ECC DIMMs (UDIMMs)	
HPE 8GB (1 x 8GB) single rank x8 DDR4-2400 CAS -17-17-17 unbuffered standard memory kit	862974-B21
HPE 16GB (1 x 16GB) dual rank x8 DDR4-2400 CA S-17-17-17 unbuffered standard Memory kit	862976-B21

Optical drives

Part Description	Option Part Number
HP 9.5 mm SATA DVD-ROM JackBlack Gen9 optical drive	726536-B21
HP 9.5 mm SATA DVD-RW JackBlack Gen9 optical d rive	726537-B21

Hard drives

Part Description	Option Part Number
6G SATA Non-Hot Plug LFF (3.5 in) Standard Midline (MDL) Drives	
HPE 4TB SATA 6G MDL 7.2 K LFF (3.5 in) Read-Wri te (RW) 1 yr warranty HDD	801888-B21
HPE 2TB SATA 6G MDL 7.2 K LFF (3.5 in) RW 1 yr warranty HDD	801884-B21

Part Description	Option Part Number
HPE 1TB SATA 6G MDL 7.2 K LFF (3.5 in) RW 1 yr warranty HDD	801882-B21
6G SATA Non-Hot Plug LFF (3.5 in) ETY HDD	
HPE 4TB SATA 6G entry 5.9 K LFF (3.5 in) RW 1 yr warranty HDD	815635-B21
6G SATA Non-Hot Plug LFF (3.5 in) STY HDD	
HPE 3TB SATA 6G MDL 7.2 K LFF (3.5 in) RW 1 yr warranty HDD	843270-B21
6G SATA Non-Hot Plug LFF (3.5 in) ETY HDD	
HPE 2TB SATA 6G MDL 7.2 K LFF (3.5 in) RW 1 yr warranty HDD	843268-B21
HPE 1TB SATA 6G MDL 7.2 K LFF (3.5 in) RW 1 yr warranty HDD	843266-B21
HPE 500GB SATA 6G MDL 7.2 K LFF (3.5 in) RW 1 yr warranty HDD	843264-B21

Solid State Drives (SSD)

Part Description	Option Part Number
HPE 240GB SATA 6G Read Intensive (RI) SFF (2.5 in) RW 3 yr warranty Digitally Signed(DS) firmware SS D	875507-B21

Networking

Part Description	Option Part Number
HPE Ethernet 1Gb 2-port 332T Adapter	615732-B21
HPE Ethernet 1Gb 4-port 331T Adapter	647594-B21
HPE Ethernet 10Gb 2-port 521T Adapter	867707-B21

Computation and graphics accelerators

Part Description	Option Part Number
HPE AMD Radeon Pro WX2100 graphics accelerator	Q1P47A

Security

Part Description	Option Part Number
HPE Trusted Platform Module (TPM) 2.0 kit	745823-B21

Smart Array controllers

Part Description	Option Part Number
Essential RAID Controllers	
HPE Smart Array E208i-p SR Gen10 (8 Internal Lanes/No cache) 12G SAS PCIePlug-in controller	804394-B21

Disk backup

Part Description	Option Part Number
HP RDX+ 500GB external backup system	Q2042A
HPE RDX 1TB Removable Disk Cartridge	Q2044A
HPE RDX 2TB Removable Disk Cartridge	Q2046A
HPE RDX 3TB Removable Disk Cartridge	Q2047A
HPE RDX 4TB Removable Disk Cartridge	Q2048A
HPE RDX 1TB External Disk Backup System	B7B69B
HPE RDX 2TB External Disk Backup System	E7X53B
HPE RDX 4TB External Disk Backup System	Q2R33A
HPE RDX External Docking Station	C8S07B

Rack mount consoles, KVM switches, and keyboards

Part Description	Option Part Number
HPE USB Keyboard and Mouse	
HPE USB US Keyboard/Mouse kit	631341-B21
HPE USB JP Keyboard/Mouse kit	631360-B21
HPE USB AP/Internal Keyboard/Mouse kit	672097-373

OS Compatibility

Feature	Description
OS and virtualization software support	• Microsoft Windows Server 2012 R2 • Microsoft Windows Server 2016 • Red Hat Enterprise Linux (RHEL) 7.4 • ClearOS



NOTE:

ClearOS, an easy to use OS with an application marketplace, allows user to build a fully fun ctional server that is just right for user at no upfront cost.

Useful Links

Description	Useful Links
Alerts	**Click here to view " Advisories, Alerts and Bulletins and Notices of HPE ProLiant MicroServer Gen10 ".**
Drivers and Software	**Click here to view "Drivers and software of HPE ProLiant MicroServer Gen10".**
Knowledge article	**Click here to view" Knowledge articles, Troubleshooting, FAQ, How to , Information document of HPE ProLiant MicroServer Gen10".**
Manuals	**Click here to view "Manuals, Guides,Release notes, Troubleshooting articles and other related document of HPE ProLiant MicroServer Gen10".**
Videos	**Click here to access " Videos of Remove/Replace , Setup/Installation, Troubleshooting, Management/Operations of HPE ProLiant MicroServer Gen10" .**