HPE ProLiant MicroServer Gen10 User Guide

Part Number: 30-9DCCCD72-006
Published: January 2025
Edition: 6

HPE ProLiant MicroServer Gen10 User Guide

Abstract

This document is for the person who installs, administers, and troubleshoots server or storage products. Hewlett Packard Enterprise assumes you are qualified in the servicing of computer equipment and trained in recognizing hazards in products with hazardous energy levels.

Part Number: 30-9DCCCD72-006
Published: January 2025
Edition: 6

© Copyright 2017–2020, 2025 Hewlett Packard Enterprise Development LP

Notices

The information contained herein is subject to change without notice. The only warranties for Hewlett Packard Enterprise products and services are set forth in the express warranty statements accompanying such products and services. Nothing herein should be construed as constituting an additional warranty. Hewlett Packard Enterprise shall not be liable for technical or editorial errors or omissions contained herein.

Confidential computer software. Valid license from Hewlett Packard Enterprise required for possession, use, or copying. Consistent with FAR 12.211 and 12.212, Commercial Computer Software, Computer Software Documentation, and Technical Data for Commercial Items are licensed to the U.S. Government under vendor's standard commercial license.

Links to third-party websites take you outside the Hewlett Packard Enterprise website. Hewlett Packard Enterprise has no control over and is not responsible for information outside the Hewlett Packard Enterprise website.

Acknowledgments

AMD Opteron™ is a trademark of Advanced Micro Devices, Inc.

Linux® is the registered trademark of Linus Torvalds in the U.S. and other countries.

Microsoft® and Windows® are either registered trademarks or trademarks of Microsoft Corporation in the United States and/or other countries.

SAS® is a registered trademark or trademark of SAS Institute, Inc.

VMware® is a registered trademark or trademark of VMware, Inc. and its subsidiaries in the United States and other jurisdictions.

All third-party marks are property of their respective owners.

Table of contents

Component identification 7
- Front panel components 7
- Front panel LEDs and buttons 9
- Rear panel components 11
- Rear panel LEDs 13
- System board components 14
  - DIMM slot locations 15
  - DIMM identification 16
  - PCIe slot description 18
- Drive numbering 20
- Drive screws 20

Setup 21
- HPE Installation Service 22
- Setting up the server 22
- Optimum environment 26
  - Site requirements 27
  - Space and airflow requirements 27
  - Temperature requirements 27
  - Power requirements 28
  - Electrical grounding requirements 28
- Server warnings and cautions 30
- Electrostatic discharge 31
- Setting up RAID using the Marvell BIOS Utility 31
- Setting up RAID using the HPE Rapid Setup Software 33
- Installing an operating system 34
  - Install an OS using the HPE Rapid Setup Software 34
  - Install an OS from a bootable installation media 35

Operations 35
- Power up the server 36
- Power down the server 36
- Prepare the server for hardware installation or removal 36
- Prepare the server for operation 37
- Remove the front bezel 37
  - Removing a locked front bezel 37

Removing an unlocked front bezel ... 39
Install the front bezel ... 40
Remove the chassis cover ... 42
Install the chassis cover ... 43
Install the chassis cover ... 43
Install the system board assembly ... 44
Install the system board assembly ... 45
Remove the system board assembly ... 46
Remove the system board assembly ... 47
Hardware options installation ... 49
Introduction ... 50
Drive options ... 50
Drive support information ... 50
Drive installation guidelines ... 51
Installing an LFF drive ... 51
Install the LFF drive ... 52
Installing an SFF drive ... 54
Install the SFF drive ... 55
Media bay options ... 59
Installing an SSD ... 60
Install the SSD ... 60
Installing an optical drive ... 65
Install an optical drive ... 66
Memory support ... 72
DIMM population information ... 72
DIMM handling guidelines ... 72
DIMM installation guidelines ... 73
Installing a DIMM ... 73
Install the DIMM ... 74
Storage controller options ... 75
Installing a Smart Array storage controller ... 75
Expansion board options ... 76
Installing an expansion board ... 77
Remove the air baffle from an expansion card ... 78
Install a low-profile bracket on an expansion card ... 79
Install the expansion board ... 80
Internal USB device options ... 82
Install an internal USB device ... 82

External HPE RDX Backup System option....84
Trusted Platform Module....84
Trusted Platform Module (TPM) — China Import Restrictions....84
Trusted Platform Module guidelines....85
Installing the Trusted Platform Module overview....86
Installing the Trusted Platform Module board....86
Install the Trusted Platform Module board....87
Retaining the recovery key/password....88
Enabling the Trusted Platform Module....89
Cabling....89
Cabling overview....90
Four-bay non-hot-plug drive cabling....90
SSD cabling....92
Optical drive cabling....93
Fan cabling....94
Power supply cabling....95
Software and configuration utilities....95
Server mode....96
Product QuickSpecs....96
Aptio Setup Utility....96
Using the Aptio Setup Utility....97
Boot option control....97
Boot option....98
Selecting the boot mode....98
Restoring and customizing configuration settings....99
Clearing the BIOS configuration settings....99
Clearing the BIOS settings by using the Aptio Setup Utility....100
Clearing the BIOS settings by using the CMOS header....100
Embedded UEFI Shell....102
Secure Boot configuration....103
Marvell BIOS Utility....103
Accessing the Marvell BIOS Utility under UEFI boot mode....104
Accessing the Marvell BIOS Utility under legacy boot mode....104
Marvell Storage Utility....104
Installing the Marvell Storage Utility....105
Smart Storage Administrator....105
USB support....106
Keeping the system current....107

Firmware 107
Firmware update 107
User default settings after BIOS update 108
Updating the system ROM using the EFI tool from within the Embedded UEFI Shell 109
Online Flash components 110
Drivers, firmware, and software updates 110
Operating System Version Support 110
Proactive notifications 110
Troubleshooting 111
Troubleshooting resources 111
System battery replacement 111
System battery information 112
Replacing a system battery 112
Replace the system battery 113
Safety, warranty, and regulatory information 114
Regulatory information 114
Notices for Eurasian Economic Union 115
Turkey RoHS material content declaration 116
Ukraine RoHS material content declaration 116
Warranty information 116
Specifications 117
Environmental specifications 117
Server specifications 118
Power supply specifications 118
200 W power supply specifications 118
Support and other resources 119
Accessing Hewlett Packard Enterprise Support 119
HPE product registration 120
Accessing updates 120
Customer self repair 121
Remote support 121
Documentation feedback 122
Acronyms and abbreviations 122

Component identification

This chapter describes the external and internal server features and components.

Subtopics

Front panel components
Front panel LEDs and buttons
Rear panel components
Rear panel LEDs
System board components
Drive numbering
Drive screws

Front panel components

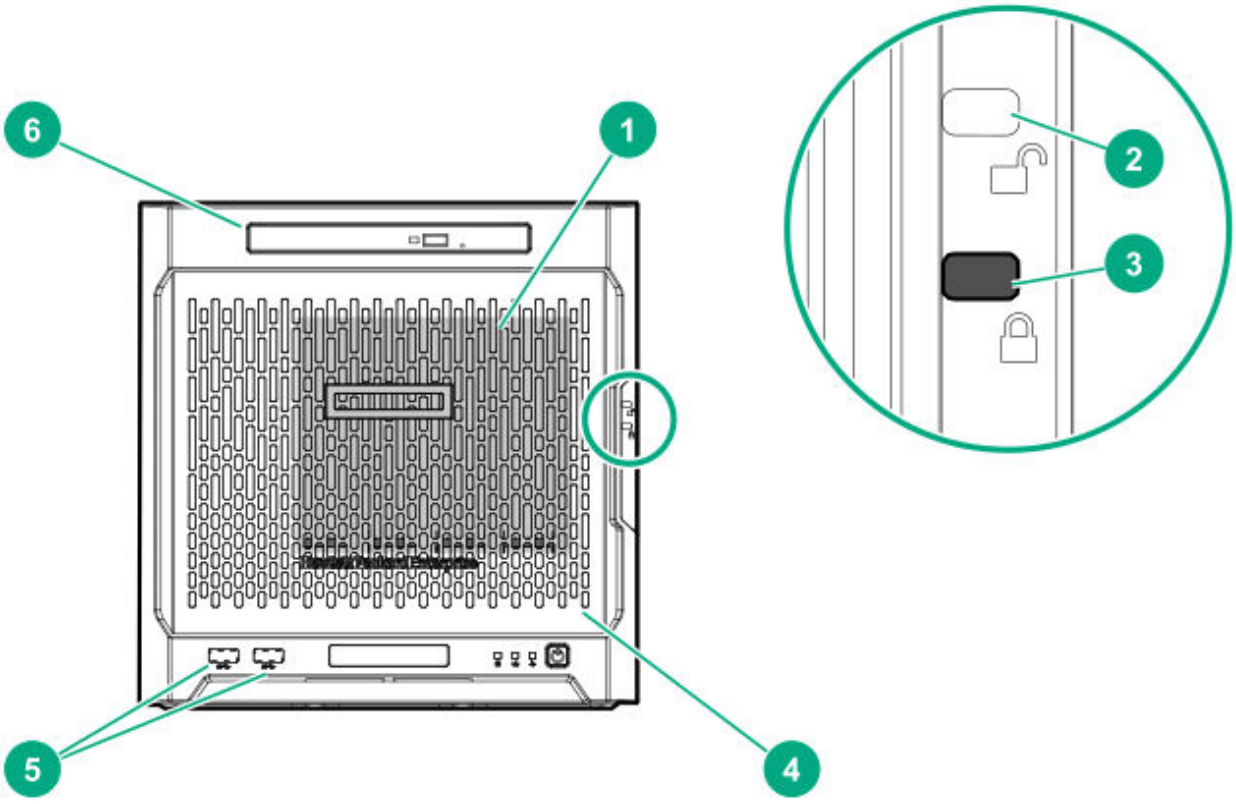

Item	Component	Description
1	Drive bays (4, behind the front bezel)	By default, the drive bays support 3.5-inch LFF SATA drives. To support 2.5-inch SFF drives, install the SFF drive converter option.
2	Front bezel unlock indicator	To remove the front bezel from the chassis, this groove must s how the blue indicator.
3	Front bezel lock indicator	To lock the front bezel in the chassis, this groove must show t he blue indicator.
4	Front bezel	To access the front drive bays, remove this bezel.
5	USB 3.0 ports (2)	Connect USB 3.0 devices to these ports. USB 3.0 support a fter POST varies by operating system.
6	Media bay	When the relevant enablement options kits are installed, thi s bay supports either a slim-type optical disc drive or solid -state drive option.

Front panel LEDs and buttons

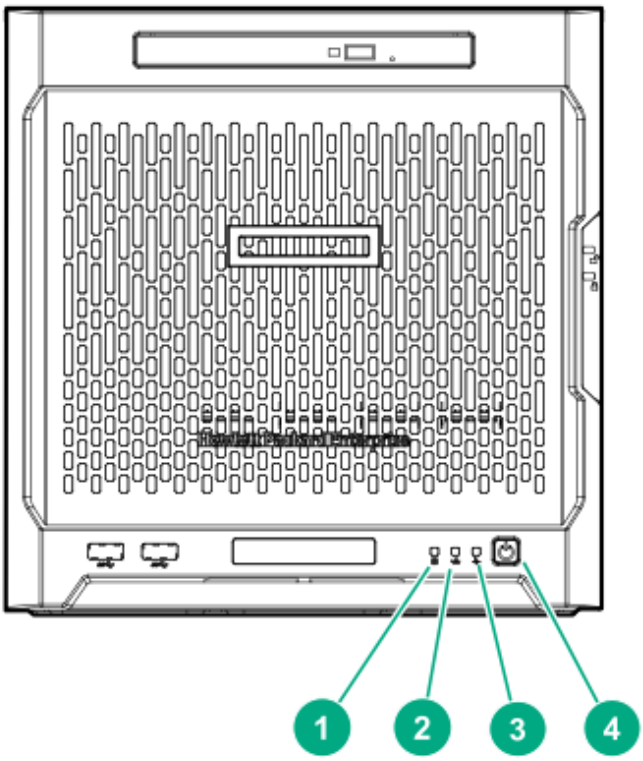

Item	Description	Status
1	Drive activity LED	Flashing green = Ongoing drive activity Off = No drive activity This LED only reflects the status of LFF/SFF drives and SSD that are connected to the onboard SATA ports.
2	NIC status LED	Solid green = Linked to network Flashing green = Network active Off = No network activity This LED only reflects the status of Ethernet connections manage d by the embedded Broadcom BCM5720 Gigabit Ethernet contro ller.
3	Health LED	Solid green = Normal Flashing amber = One or more components is in degraded conditi on. [1] Flashing red = One or more components is in critical condition. [1]

Item	Description	Status
4	Power on/Standby button and system power LED	Flashing green = Ongoing power-on sequence Solid green = System on and normal operation Amber = System in standby Off = No power present [2]

[1] To identify which component is in the degraded or critical state, reboot the server. A POST error message screen showing the affected component will appear for about 30 seconds. Depending on how critical the component health status is, the system boot may or may not be completed. For troubleshooting information, see the **HPE ProLiant MicroServer Gen10 Troubleshooting Guide**.

[2] If the server does not power on, verify the following items:

- The site power is available.
- The power cord is properly connected to the server power jack and to a working power source.
- The internal power supply cable is properly connected to the system board.

Rear panel components

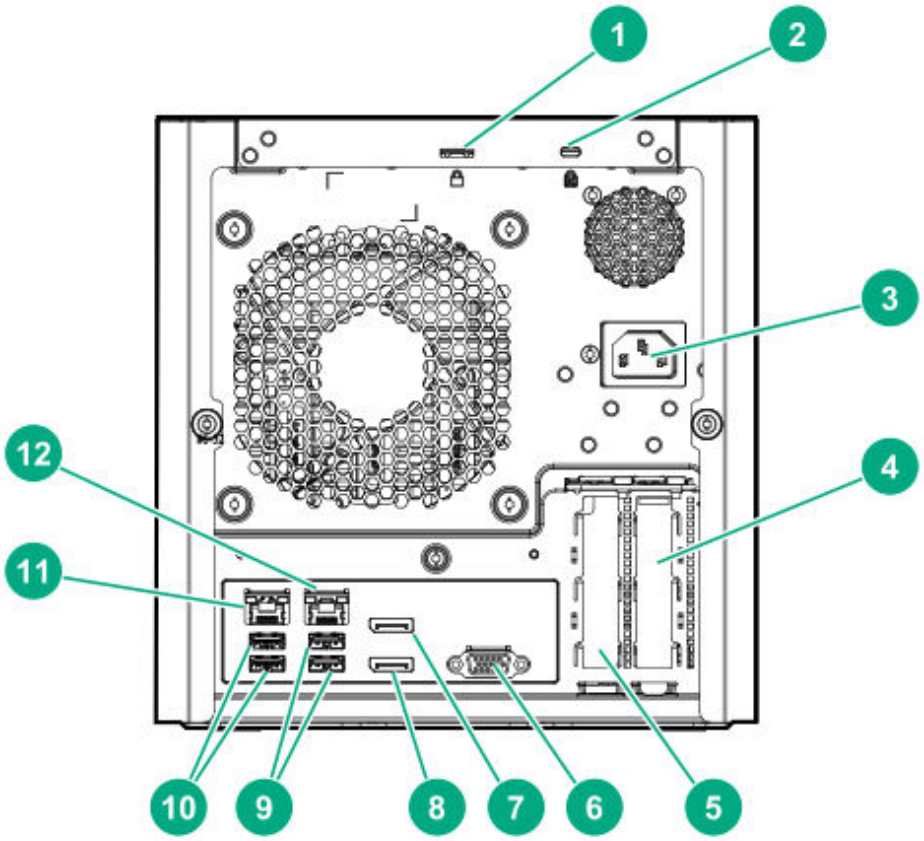

Item	Component	Description
1	Padlock eye	To lock the chassis cover and prevent access to the internal c omponents, attach a padlock here.
2	Kensington security slot	To secure the server to a heavy or immovable object, connect an anti-theft security cable here.
3	Power jack	Connects the power cord.
4	Expansion slot 2, PCIe3 ×4 (1)	For additional hardware capabilities, install a compatible low -profile PCIe expansion board here. This expansion slot sup ports expansion boards with a physical connector link widths of up to ×16. [1]
5	Expansion slot 1, PCIe3 ×8 (8, 4, 1)	For additional hardware capabilities, install a compatible low -profile PCIe expansion board here. This expansion slot sup ports expansion boards with a physical connector link widths of up to ×16. [1]

Item	Component	Description
6	Video port	Connects to an analog VGA monitor or projector.
7	Display port 1	Connects to a digital display device, such as a high-resolution set top boxes or TV displays. [2]
8	Display port 2	Connects to a digital display device, such as a high-resolution set top boxes or TV displays. [2]
9	USB 2.0 ports (2)	Connect USB 2.0 devices to these ports.
10	USB 3.0 ports (2)	Connect USB 3.0 devices to these ports. USB 3.0 support a fter POST varies by operating system.
11	NIC port 1 (1 Gb)	Connect an Ethernet cable here to connect the server to a wi red network. [3]
12	NIC port 2 (1 Gb)	Connect an Ethernet cable here to connect the server to a wi red network. [3]

[1] This expansion slot is open-ended, which enables down-plugging. Down-plugging means a larger-width expansion board can be installed in a smaller-width connector. For this server, the expansion slot supports low-profile expansion boards with a physical connector link width of up to ×16. The board operates at the highest common negotiable link width specified for the slot.

[2] To support 4K resolution at a full 60 Hz frame rate, this Display port requires dual-channel memory configuration. Single-channel memory configuration will only support up to 30 Hz frame rate.

[3] This NIC port supports 10/100/1000 Mbps data transfer rate per port.

Rear panel LEDs

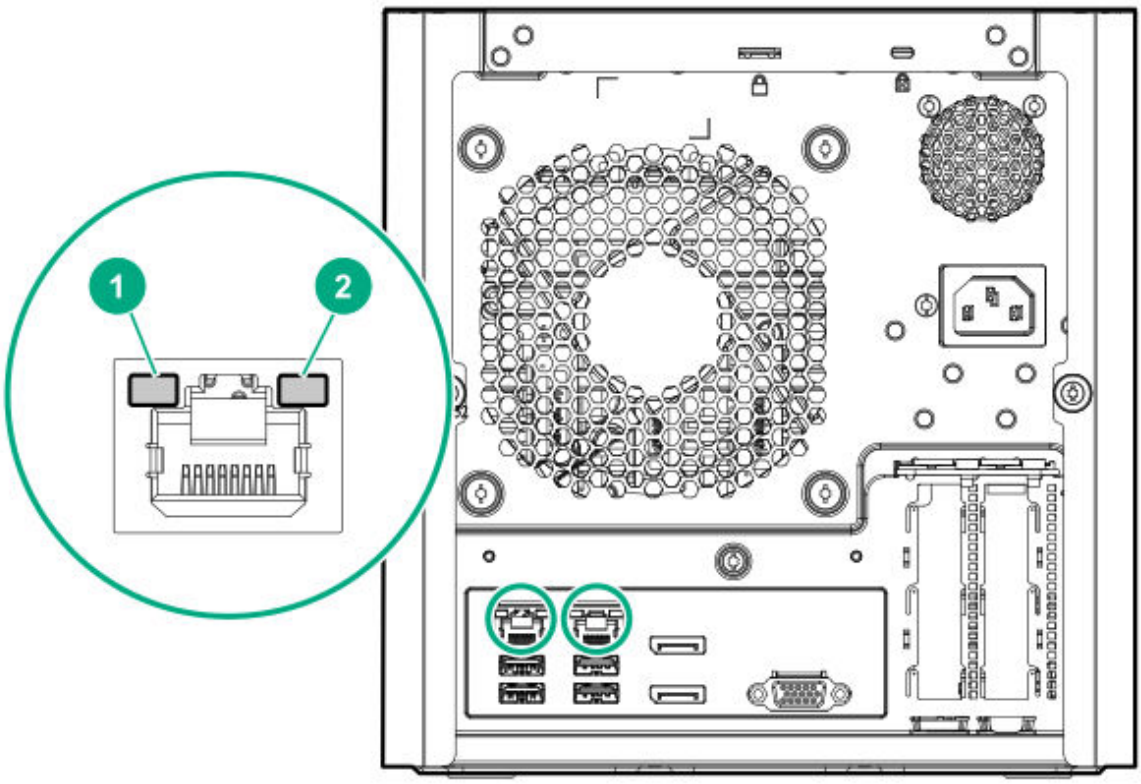

Item	Description	Status
1	NIC link LED	Solid green = Link exists Off = No link exists
2	NIC status LED	Solid green = Linked to network Flashing green = Network active Off = No network activity

System board components

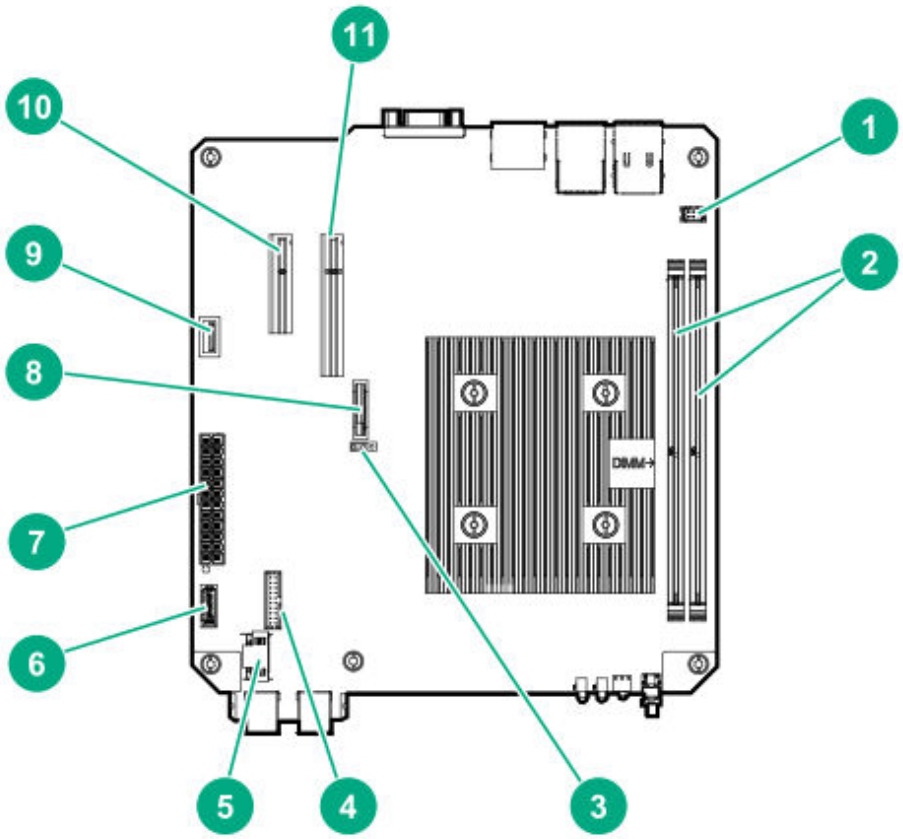

Item	Component	Description
1	Fan connector	Connects the fan cable.
2	DIMM slots	These slots support standard UDIMMs with ECC only.
3	CMOS header	Use the jumper on this header to clear the CMOS.
4	TPM connector	This connector supports the TPM 2.0 option for data security solutio n.
5	LFF/SFF drive SATA port	Connects the LFF/SFF drive SATA cable. [1]
6	Optical drive or SSD SATA port	Connects the optical drive or SSD SATA cable. [1]
7	System board power conne ctor	Connects the power supply cable.
8	System battery	This battery provides power to the server real-time clock and BIOS s ettings.

Item	Component	Description
9	Internal USB 2.0 port	Connect internal USB devices to this port.
10	Expansion slot 2, PCIe3 ×4 (1)	For additional hardware capabilities, install a compatible low-profile PCIe expansion board here. This expansion slot supports expansion boards with a physical connector link widths of up to ×16. [2]
11	Expansion slot 1, PCIe3 ×8 (8, 4, 1)	For additional hardware capabilities, install a compatible low-profile PCIe expansion board here. This expansion slot supports expansion boards with a physical connector link widths of up to ×16. [2]

[1] These are SATA 6Gb/s ports.

[2] This expansion slot is open-ended, which enables down-plugging. Down-plugging means a larger-width expansion board can be installed in a smaller-width connector. For this server, the expansion slot supports low-profile expansion boards with a physical connector link widths of up to ×16. The board operates at the highest common negotiable link width specified for the slot.

Subtopics

DIMM slot locations
DIMM identification
PCIe slot description

DIMM slot locations

The DIMM slots are numbered 1 and 2. The arrow in the following illustration points to the front of the server.

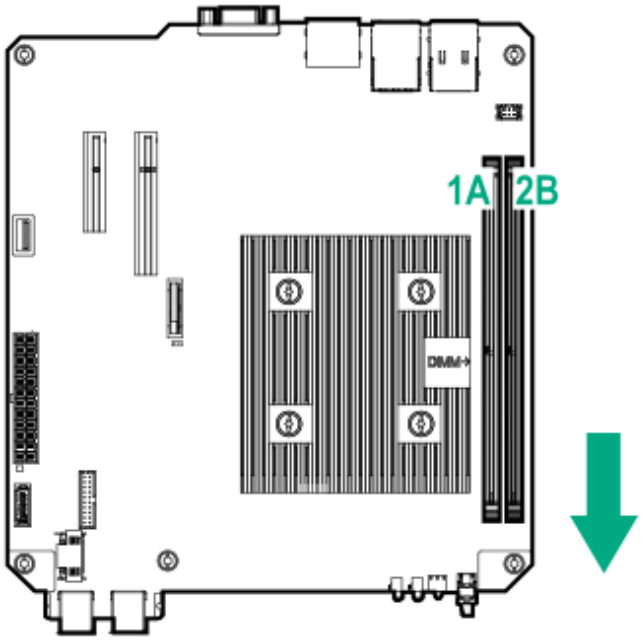

DIMM identification

To determine DIMM characteristics, see the label attached to the DIMM. The information in this section helps you to use the label to locate specific information about the DIMM.

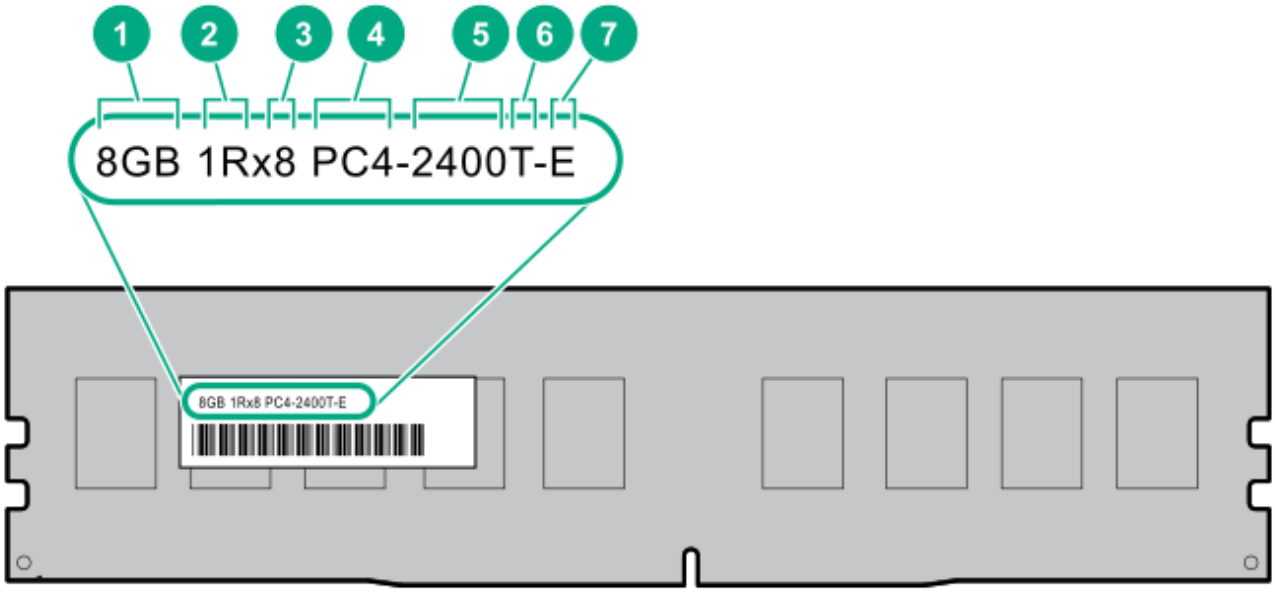

Item	Description	Definition
1	Capacity	8 GB 16 GB 32 GB 64 GB 128 GB
2	Rank	1R = Single-rank 2R = Dual-rank 4R = Quad-rank 8R = Octal-rank
3	Data width on DRAM	x4 = 4-bit x8 = 8-bit x16 = 16-bit
4	Memory generation	PC4 = DDR4
5	Maximum memory speed	2133 MT/s 2400 MT/s 2666 MT/s

Item	Description	Definition
6	CAS latency	P = CAS 15-15-15 T = CAS 17-17-17 U = CAS 20-18-18 V = CAS 19-19-19 (for RDIMM, LRDIMM) V = CAS 22-19-19 (for 3DS TSV LRDIMM)
7	DIMM type	R = RDIMM (registered) L = LRDIMM (load reduced) E = UDIMM (unbuffered ECC)

PCIe slot description

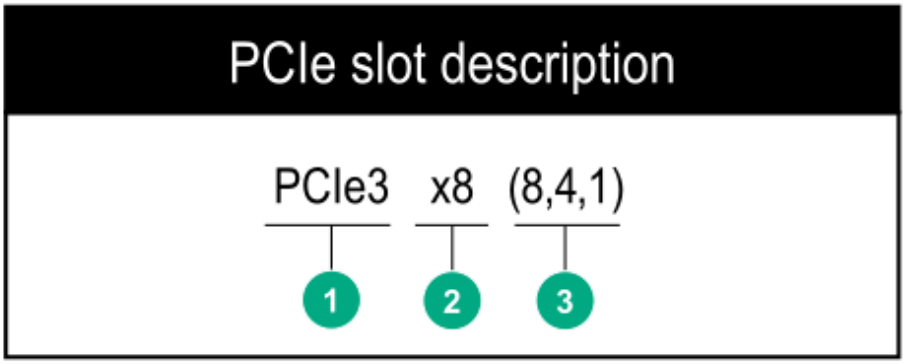

Item	Description	Definition
1	PCI Express version	Each PCIe version corresponds to a specific data transfer rate between the processor and peripheral devices. Gene rally, a version update corresponds to an increase in tran sfer rate. • PCIe 1.x • PCIe 2.x • PCIe 3.x

Item	Description	Definition
		The PCIe technology is under constant development. For the latest information, see the **PCI-SIG website**.
2	Physical connector link width	PCIe devices communicate through a logical connection called an interconnect or link. At the physical level, a link is composed of one or more lanes. The number of lanes i s written with an "x" prefix with x16 being the largest si ze in common use. • x1 • x2 • x4 • x8 • x16
3	Negotiable link width	These numbers correspond to the maximum link bandwi dth supported by the slot.

Drive numbering

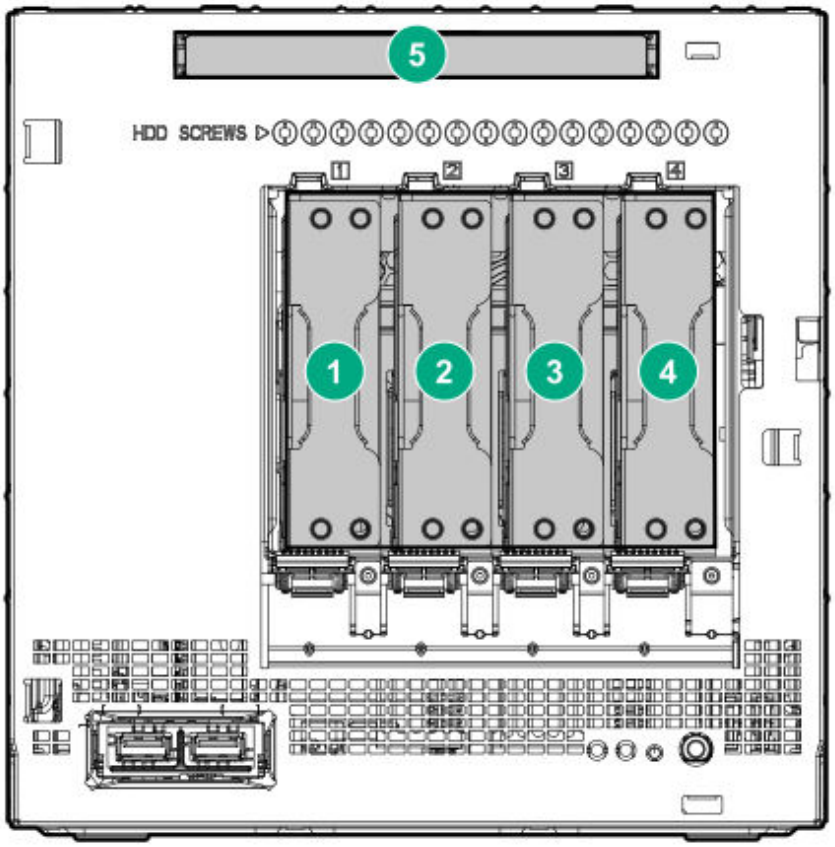

Item	Description
1-4	LFF/SFF drives To support 2.5-inch SFF drives, install the SFF drive converter option.
5	Solid-state drive or optical disc drive

Drive screws

There are 16 T-15 Torx screws located above the drive bays. Use these screws to install LFF or SFF drives in the server.

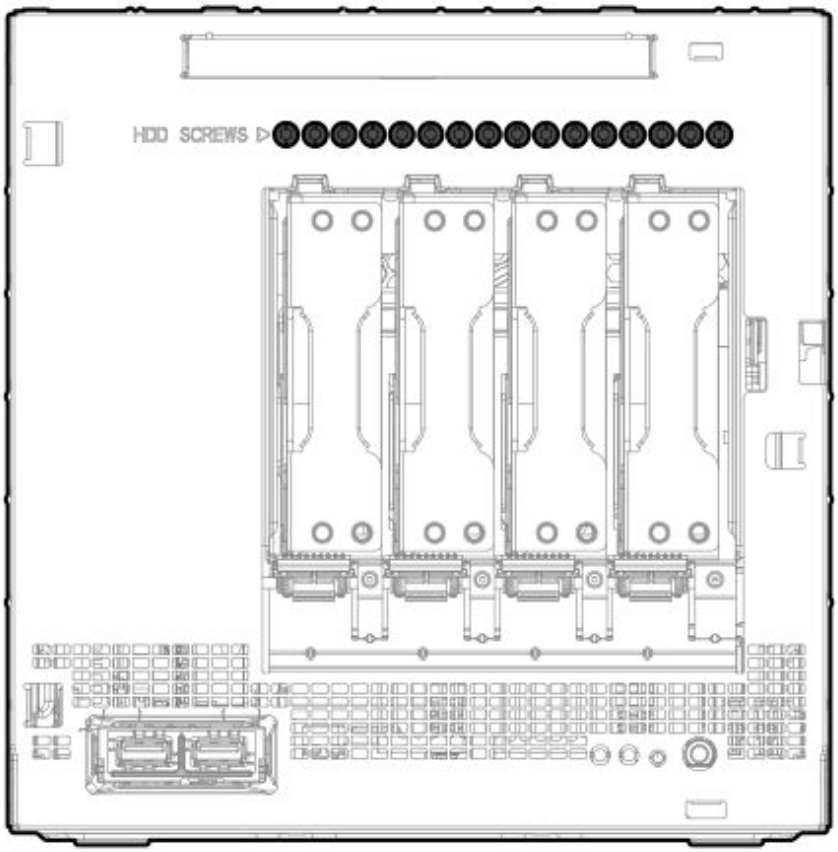

Setup

Subtopics

- **HPE Installation Service**
- **Setting up the server**
- **Optimum environment**
- **Server warnings and cautions**
- **Electrostatic discharge**
- **Setting up RAID using the Marvell BIOS Utility**
- **Setting up RAID using the HPE Rapid Setup Software**
- **Installing an operating system**

HPE Installation Service

HPE Installation Service provides basic installation of Hewlett Packard Enterprise branded equipment, software products, as well as HPE-supported products from other vendors that are sold by HPE or by HPE authorized resellers. The Installation Service is part of a suite of HPE deployment services that are designed to give users the peace of mind that comes from knowing that their HPE and HPE-supported products have been installed by an HPE specialist.

The HPE Installation Service provides the following benefits:

- Installation by an HPE authorized technical specialist.
- Verification prior to installation that all service prerequisites are met.
- Delivery of the service at a mutually scheduled time convenient to your organization.
- Allows your IT resources to stay focused on their core tasks and priorities.
- Full coverage during the warranty period for products that require installation by an HPE authorized technical specialist.

For more information on the features, limitations, provisions, and ordering information of the HPE Installation Service, see this Hewlett Packard Enterprise website:

https://www.hpe.com/support/installation-service

Setting up the server

Prerequisites

Before setting up the server:

- This server supports Class 2 UEFI implementation. UEFI Class 2 implementation supports both UEFI boot mode and legacy BIOS boot mode. The boot mode is configured in the Aptio Setup Utility. When the server is configured for UEFI boot mode, observe the appropriate operating system, boot mode, network device, and controller requirements. For more information on these requirements, see the Important UEFI Requirements for HPE ProLiant MicroServer Gen10 on the Hewlett Packard Enterprise Information Library:
  https://www.hpe.com/info/UEFI/docs
- Download the latest system software and firmware for the server:
  https://www.hpe.com/downloads/microservergen10

  Support validation required
- If an HPE Smart Array controller is installed, download the storage driver from the HPE Support Center website:

https://www.hpe.com/support/hpesc

- Verify that your OS or virtualization software is supported:
  https://www.hpe.com/info/ossupport
- Read the operational requirements for the server:
  Optimum environment
- Read the safety and compliance information on the HPE website:
  https://www.hpe.com/support/safety-compliance-enterpriseproducts

Procedure

Unbox the server

1. Unbox the server and verify the contents:
   - Server
   - Power cord
   - Printed setup documentation

Install the hardware options

2. (Optional) Install the hardware options.

   For installation instructions, see Hardware options installation.

Connect the I/O cables and power cord

3. Connect the I/O devices:
   a. Connect a keyboard and mouse to the USB ports.
   b. Connect a monitor to the VGA or Display port.

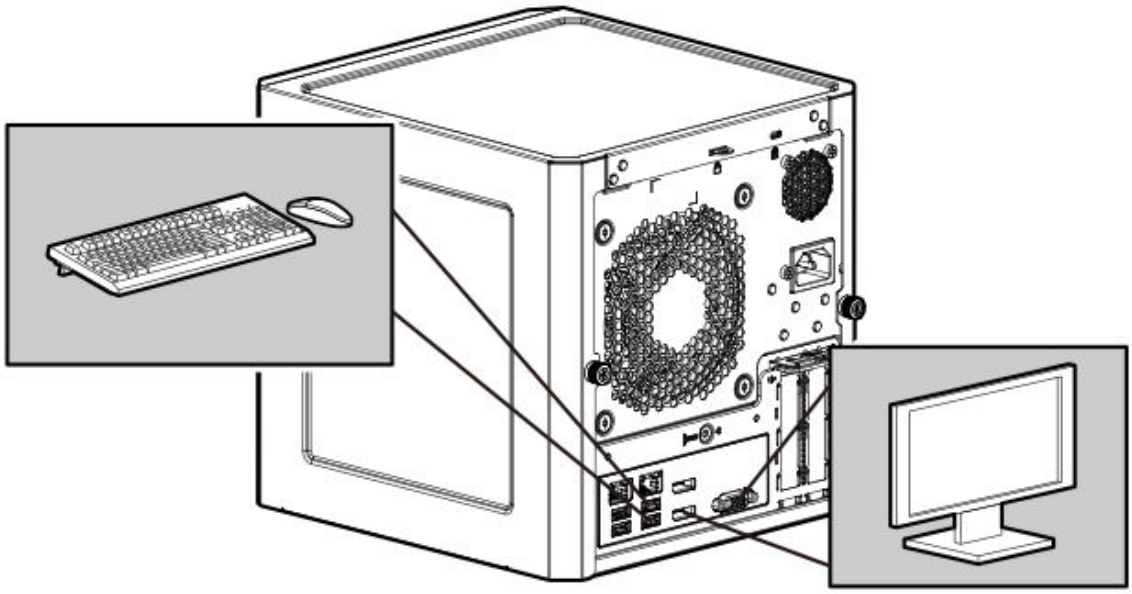

4. Connect the network cable:
   a. Connect one end of the network cable to the NIC port.
   b. Connect the other end of the network cable to a network jack or a network device, such as router or LAN switch.

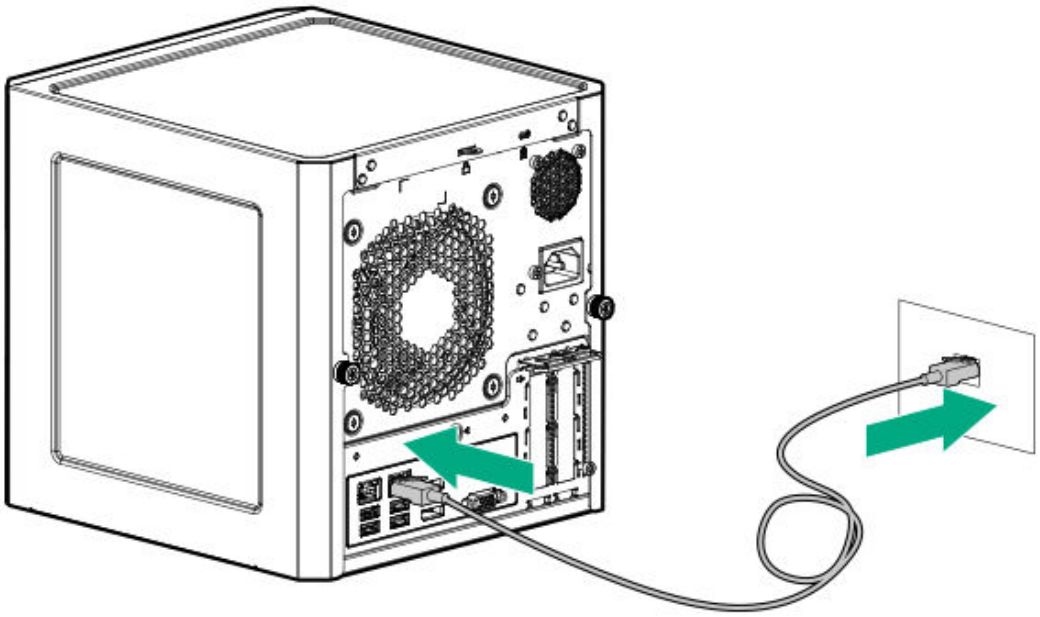

5. Connect the power cord:
   a. Connect the power cord to the server power jack.
   b. Connect the power cord to the AC power source.

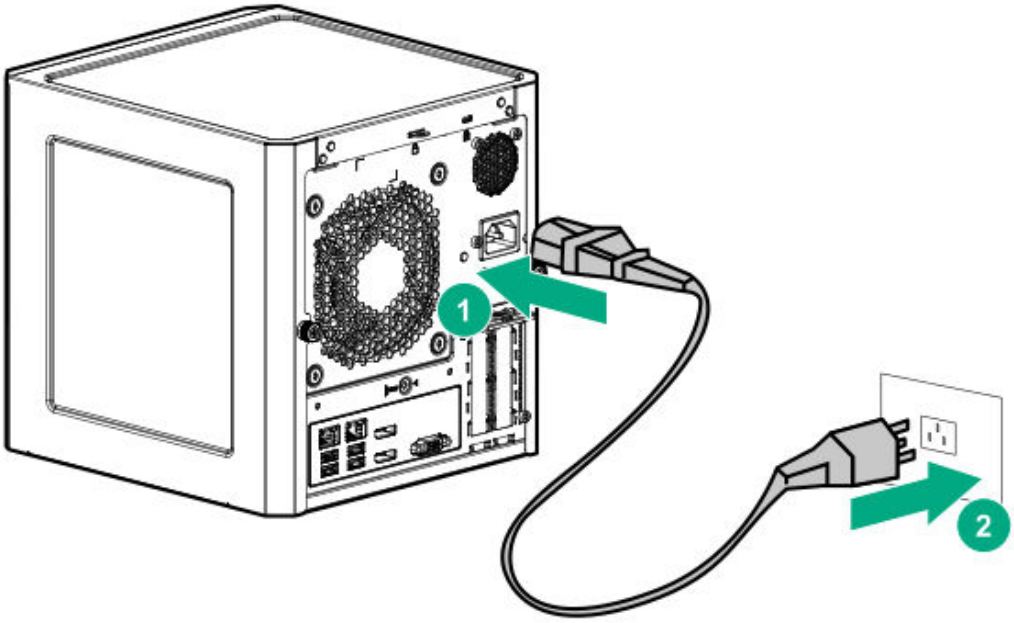

Power on the server

6. Press the Power On/Standby button.
7. Verify that the system power LED changes to green.
8. Update the following:
    - System ROM
    - Storage controller
    - Network controller

Set up the storage

9. Set up the storage. Do one of the following:
    - If the drives are connected to the onboard LFF/SFF drive SATA port, set up RAID using the Marvell BIOS Utility.
    - If the drives are connected to an HPE Smart Array controller option, do one of the following:
        - If the HPE Rapid Setup Software USB drive is shipped with server, set up automatic RAID using the RSS.
        - Set up RAID using the Smart Storage Administrator.

    An SSD or optical drive installed in the media bay does not support RAID configuration.

Deploy an OS or virtualization software

.0. Install an operating system (OS).

.1. Register the server.

Optimum environment

When installing the server, select a location that meets the environmental requirements described in this section.

Subtopics

Site requirements
Space and airflow requirements
Temperature requirements
Power requirements
Electrical grounding requirements

Site requirements

The server may be located in an office space or a purpose-made equipment room. The location must:

- Comply with local health and safety regulations.
- Be clean, tidy, and free of excessive dust and vibration.
- Be in an area in which the server cannot easily be disconnected from its power source.
- Not be adjacent to or underneath any area or piece of equipment where liquid is stored.
- Not be in a place where the server might be bumped, scratched, or disturbed.
- Be within an area that is ideally locked or at minimum not accessible to unauthorized personnel.
- Be within patching distance, directly or via cable management cross-patches, of the location of the WAN connection and the switch that supplies the office/room floor network ports.

Space and airflow requirements

Leave at least a 10 cm (4 in) clearance space at the front and back of the server for proper ventilation.

CAUTION

The server draws in cool air through the ventilation openings on the front side, and expels warm air through the ventilation openings on the rear side. Do not block these openings. Failure to observe this caution will result in improper airflow and insufficient cooling that can lead to thermal damage.

Temperature requirements

To ensure continued, safe, and reliable equipment operation, install or position the system in a well-ventilated, climate-controlled environment.

The maximum recommended TMRA for most server products is 35°C (95°F). The temperature in the room where the server is located must not exceed 35°C (95°F).

CAUTION

To reduce the risk of damage to the equipment when installing third-party options:

- Do not permit optional equipment to impede airflow around the server beyond the maximum allowable limits.
- Do not exceed the manufacturer's TMRA.

Power requirements

Installation of this equipment must comply with local and regional electrical regulations governing the installation of information technology equipment by licensed electricians. This equipment is designed to operate in installations covered by NFPA 70, 1999 Edition (National Electric Code) and NFPA-75, 1992 (code for Protection of Electronic Computer/Data Processing Equipment). For electrical power ratings on options, see the product rating label or the user documentation supplied with that option.

CAUTION

Protect the server from power fluctuations and temporary interruptions with a regulating uninterruptible power supply. This device protects the hardware from damage caused by power surges and voltage spikes and keeps the system in operation during a power failure.

When installing more than one server, you might have to use additional power distribution devices to safely provide power to all devices. Observe the following guidelines:

- Balance the server power load between available AC supply branch circuits.
- Do not allow the overall system AC current load to exceed 80% of the branch circuit AC current rating.
- Do not use common power outlet strips for this equipment.
- Provide a separate electrical circuit for the server.

Electrical grounding requirements

The server must be grounded properly for proper operation and safety. In the United States, you must install the equipment in accordance with NFPA 70, National Electric Code Article 250, as well as any local and

regional building codes. In Canada, you must install the equipment in accordance with Canadian Standards Association, CSA C22.1, Canadian Electrical Code. In all other countries, you must install the equipment in accordance with any regional or national electrical wiring codes, such as the International Electrotechnical Commission (IEC) Code 364, parts 1 through 7. Furthermore, you must be sure that all power distribution devices used in the installation, such as branch wiring and receptacles, are listed or certified grounding-type devices.

Because of the high ground-leakage currents associated with multiple servers connected to the same power source, Hewlett Packard Enterprise recommends the use of a PDU that is either permanently wired to the building's branch circuit or includes a nondetachable cord that is wired to an industrial-style plug. NEMA locking-style plugs or those complying with IEC 60309 are considered suitable for this purpose. Using common power outlet strips for the server is not recommended.

Server warnings and cautions

WARNING

To reduce the risk of personal injury, electric shock, or damage to the equipment, disconnect the power cord to remove power from the server. Pressing the Power On/Standby button does not shut off system power completely. Portions of the power supply and some internal circuitry remain active until AC power is removed.

WARNING

To reduce the risk of personal injury from hot surfaces, allow the drives and the internal system components to cool before touching them.

CAUTION

Protect the server from power fluctuations and temporary interruptions with a regulating UPS. This device protects the hardware from damage caused by power surges and voltage spikes and keeps the server in operation during a power failure.

CAUTION

To prevent improper cooling and thermal damage, do not operate the server with the media bay blank, chassis cover, or the front bezel removed.

CAUTION

To prevent damage to electrical components, properly ground the server before beginning any installation procedure. Improper grounding can cause electrostatic discharge.

CAUTION

To avoid data loss, Hewlett Packard Enterprise recommends that you back up all server data before installing or removing a hardware option, or performing a server maintenance or troubleshooting procedure.

Electrostatic discharge

Be aware of the precautions you must follow when setting up the system or handling components. A discharge of static electricity from a finger or other conductor may damage system boards or other static-sensitive devices. This type of damage may reduce the life expectancy of the system or component.

To prevent electrostatic damage:

- Avoid hand contact by transporting and storing products in static-safe containers.
- Keep electrostatic-sensitive parts in their containers until they arrive at static-free workstations.
- Place parts on a grounded surface before removing them from their containers.
- Avoid touching pins, leads, or circuitry.
- Always be properly grounded when touching a static-sensitive component or assembly. Use one or more of the following methods when handling or installing electrostatic-sensitive parts:
    - Use a wrist strap connected by a ground cord to a grounded workstation or computer chassis. Wrist straps are flexible straps with a minimum of 1 megohm ±10 percent resistance in the ground cords. To provide proper ground, wear the strap snug against the skin.
    - Use heel straps, toe straps, or boot straps at standing workstations. Wear the straps on both feet when standing on conductive floors or dissipating floor mats.
    - Use conductive field service tools.
    - Use a portable field service kit with a folding static-dissipating work mat.

  If you do not have any of the suggested equipment for proper grounding, have an authorized reseller install the part.

For more information on static electricity or assistance with product installation, contact an authorized reseller.

Setting up RAID using the Marvell BIOS Utility

Procedure

1. Reboot the server.
2. Access the MBU.
3. In the Topology pane, select **HBA 0: Marvell 0** and press the **Enter** key.

   The Configuration Wizard popup appears.



4. Press the **Enter** key.
5. Use the arrow keys to scroll through the list of free physical drives.
6. To select/deselect the physical drive to use to create the drive array, press the spacebar.

   An asterisk (*) appears when a drive is selected.
7. After selecting the physical drives, press the **Enter** key.
8. Select the preferred RAID level and press the **Enter** key.

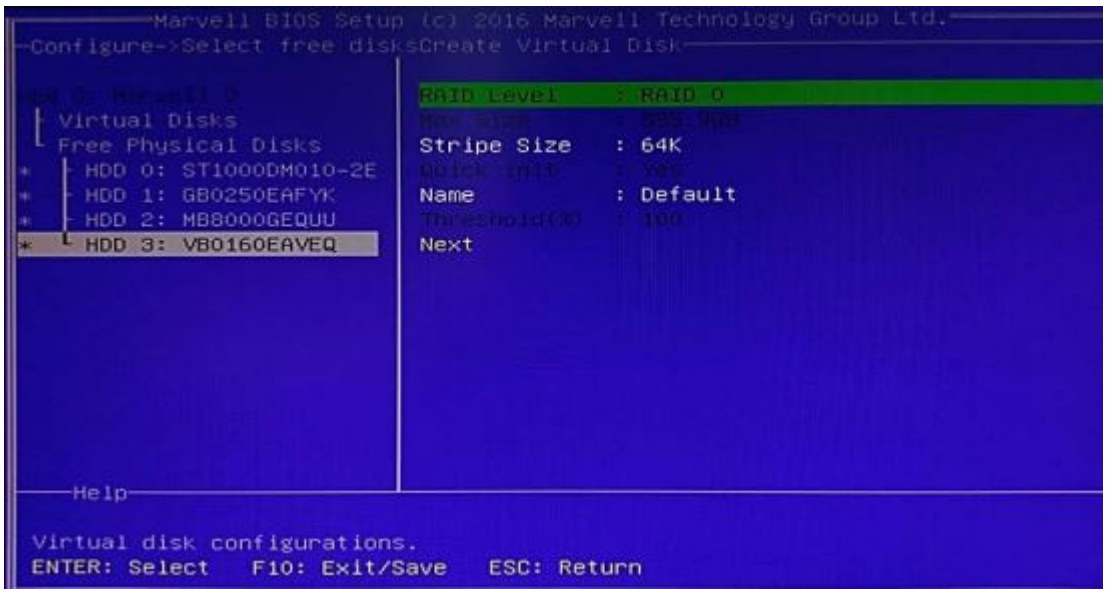

9. Select the stripe size for the drive array and press the **Enter** key.

10. A default name is assigned to the new drive array. To rename the drive array:
    a. Select the **Name** field.
    b. Enter a new name.
    c. Press the **Enter** key.
11. Select **Next**.
12. Press the **Enter** key.

    A dialog box appears to confirm the drive array creation.
13. Press **Y** to create the drive array.

    The new drive array appears in the Topology pane.
14. Press **F10** to save the RAID configuration.
15. If RAID was set up prior to the OS installation, install the OS now.

Setting up RAID using the HPE Rapid Setup Software

Prerequisites

- Make sure that HPE Rapid Setup Software USB drive is plugged into the server USB port.
- Make sure that the server drives are of the same size and type.

About this task

This server only supports the HPE RSS automatic RAID function; manual RAID configuration is not supported.

When the server boots from the USB drive, HPE RSS prompts you to select your RAID setup.

Procedure

1. Press the **F11** key when prompted during system boot.
2. Select the USB drive corresponding to the RSS USB drive from the boot menu.

   The server launches the HPE Rapid Setup Software.
3. Read and accept the EULA to continue.

   The software scans the server for RAID information and hardware.

4. To configure automatic RAID, click **Continue**.
5. If RAID was set up prior to the OS installation, install the OS now.

Installing an operating system

To install an operating system on the server, use one of the following methods:

- If the HPE Rapid Setup Software USB drive is shipped with the server, you can use this software to install the OS. The RSS main menu will display the available OS install images for the server.
- Install an OS directly from the OS installation media.

  This installation media can either be an optical CD/DVD or a USB drive. If you are using an OS installation CD/DVD and the server does not have an internal optical drive installed, an external USB optical drive is required.

Subtopics

Install an OS using the HPE Rapid Setup Software
Install an OS from a bootable installation media

Install an OS using the HPE Rapid Setup Software

Prerequisites

- Make sure the HPE Rapid Setup Software USB drive is plugged into the server USB port.
- If you are installing a supported Windows operating system, plug the OS installation media into the server or make sure that the files are available on a network drive.

  ClearOS and ClearVM are both included in the HPE Rapid Setup Software USB drive, you do not need another media source.

About this task

Use the HPE Rapid Setup Software to install the supported versions of Windows, ClearOS, ClearVM, and VMware. HPE Rapid Setup Software does not support installing a Linux operating system.

Procedure

1. On the HPE Rapid Setup Software main menu, select the operating system that you want to install.

2. Select the location where the operating system files are saved.
3. Navigate to the operating system installation files.
4. Follow the onscreen prompts.

Install an OS from a bootable installation media

Procedure

1. On the Aptio Setup Utility screen, select the **Boot** menu.
2. Under **Boot Option Priorities**, verify that **Boot Option #1** is set to the OS installation media device.

   If it is not set, select **Boot Option #1**, press the **Enter** key, and then change the setting.
3. To confirm the change and exit the utility, press the **F4** key.

   The server automatically reboots to the selected device.
4. Follow the OS installation wizard instructions.

Operations

This chapter describes the hardware operations carried out prior to and after installing or removing a hardware component, or performing a server maintenance or troubleshooting procedure.

Before performing these hardware operations, review and observe the server warnings and cautions.

Subtopics

Power up the server
Power down the server
Prepare the server for hardware installation or removal
Prepare the server for operation
Remove the front bezel
Install the front bezel
Remove the chassis cover
Install the chassis cover
Install the system board assembly
Remove the system board assembly

Power up the server

About this task

Press the Power On/Standby button.

The server exits standby mode and applies full power to the system. The system power LED changes to green.

Power down the server

Prerequisites

Before powering down the server for any upgrade or maintenance procedures, perform a backup of critical server data and programs.

Procedure

- Press and release the Power On/Standby button.

  This method initiates a controlled shutdown of applications and the OS before the server enters standby mode.

- Press and hold the Power On/Standby button for more than 4 seconds to force the server to enter standby mode.

  This method forces the server to enter standby mode without properly exiting applications and the OS. If an application stops responding, you can use this method to force a shutdown.

  The system power LED changes to red indicating that the server is in standby mode. Auxiliary power is still present in the system in this mode.

Prepare the server for hardware installation or removal

Procedure

1. Power down the server.
2. Disconnect the power cord from the AC source, and then from the server.

3. Disconnect all peripheral cables from the server.
4. If installed, unlock and remove the security padlock and/or the Kensington security lock.

   For more information, see the lock documentation.

Prepare the server for operation

Procedure

1. If removed, attach the security padlock and/or the Kensington security lock.

   For more information, see the lock documentation.
2. Connect all peripheral cables to the server.
3. Connect the power cord to the server power jack, and then to the AC source.
4. Secure the power cord and rear panel cables based on the standard cable management practices.
5. Power up the server.

Remove the front bezel

To access the drive bays, remove the front bezel.

Subtopics

Removing a locked front bezel
Removing an unlocked front bezel

Removing a locked front bezel

Prerequisites

1. Power down the server.
2. Disconnect the power cord from the AC source, and then from the server.
3. Disconnect all peripheral cables from the server.

4. Remove the chassis cover.

Procedure

1. To unlock the front bezel from the chassis, slide the release tab upward.

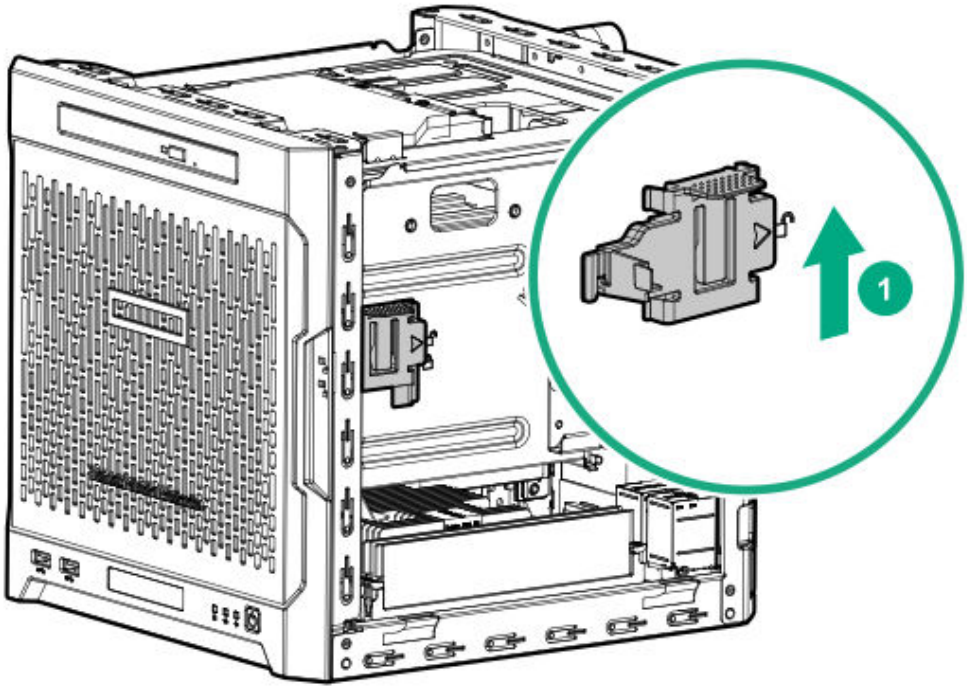

2. Open the front bezel.

   The front bezel is a removable part. Opening the bezel will loosen it from the front panel.

3. To completely detach the bezel from the front panel, pull the bezel hinges from the chassis.

   Retain the bezel for later use.

Results

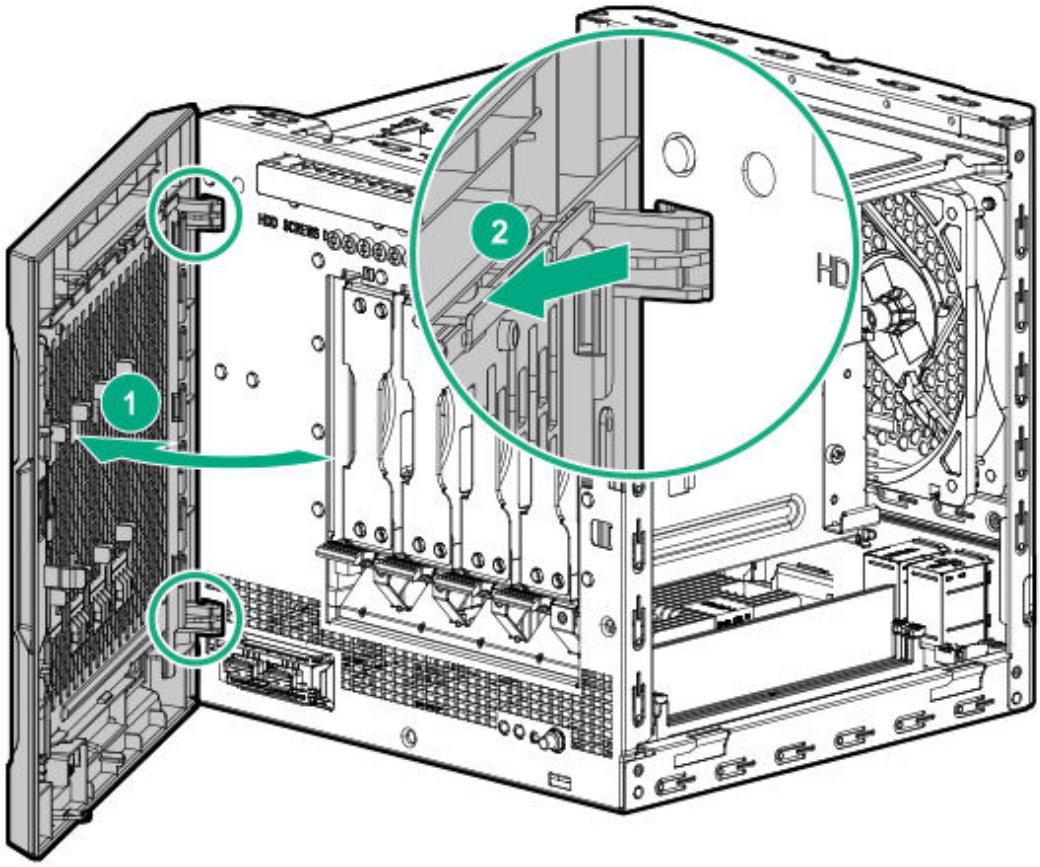

Removing an unlocked front bezel

Prerequisites

1. Power down the server.
2. Disconnect the power cord from the AC source, and then from the server.
3. Disconnect all peripheral cables from the server.

Procedure

1. Open the front bezel.

   The front bezel is a removable part. Opening the bezel will loosen it from the front panel.

2. To completely detach the bezel from the front panel, pull the bezel hinges from the chassis.

   Retain the bezel for later use.

Results

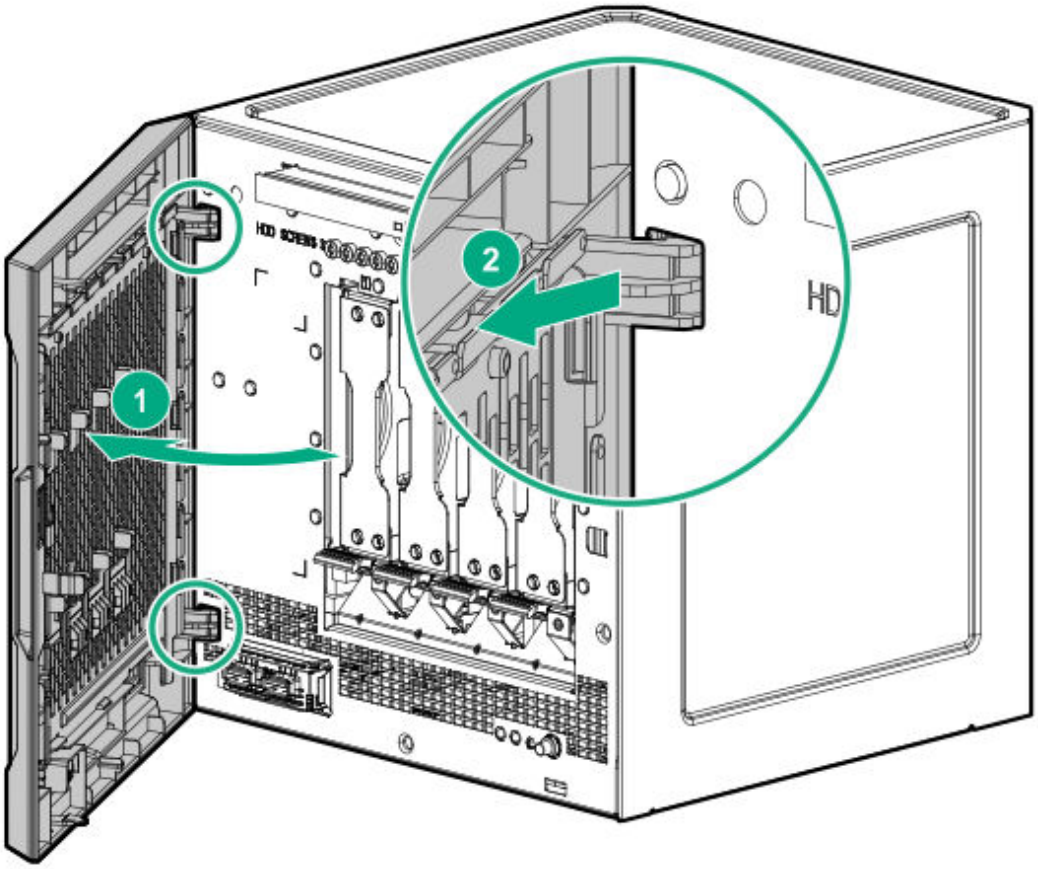

Install the front bezel

About this task

To cover the drive bays, install the front bezel.

Procedure

1. Attach the bezel to the front panel, and then close it.

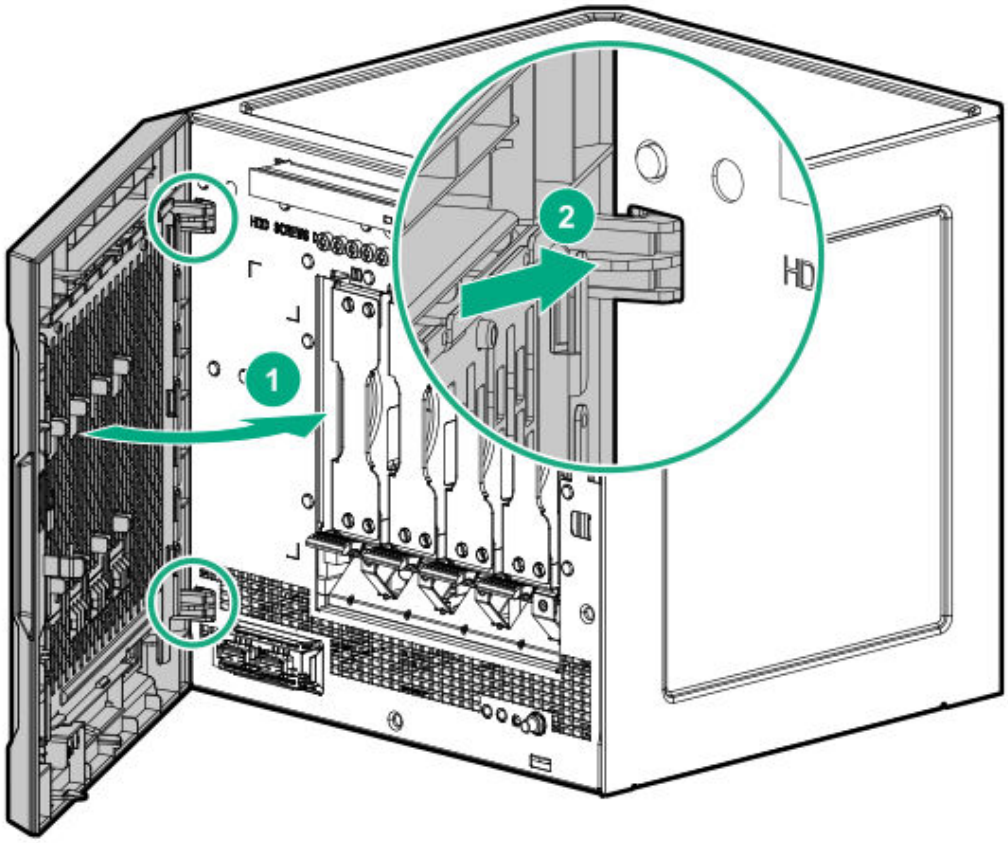

2. If you prefer to secure the bezel to the chassis, do the following:

   a. If installed, remove the chassis cover.

   b. Slide the release tab downwards to lock the bezel to the chassis.

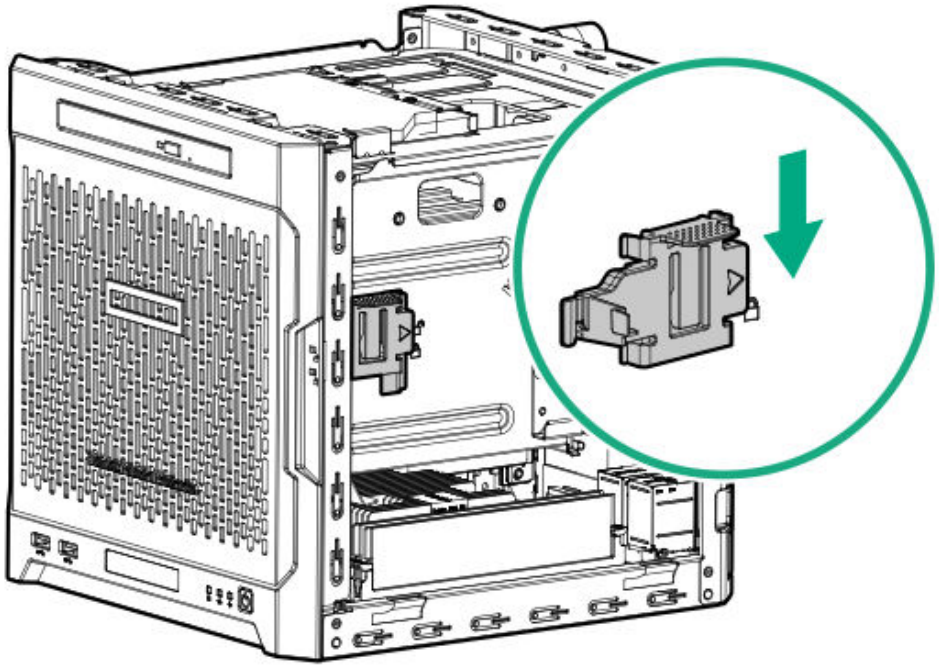

c. Install the chassis cover.

Remove the chassis cover

About this task

To access the front bezel lock and the internal components, remove the chassis cover.

Procedure

1. If installed, unlock and remove the security padlock and/or the Kensington security lock.

   For more information, see the lock documentation.

2. Remove the chassis cover thumbscrews.

   If the thumbscrews are too tight, use a T-15 screwdriver to remove it.

3. Slide the chassis cover toward the rear panel, and then lift it from the server.

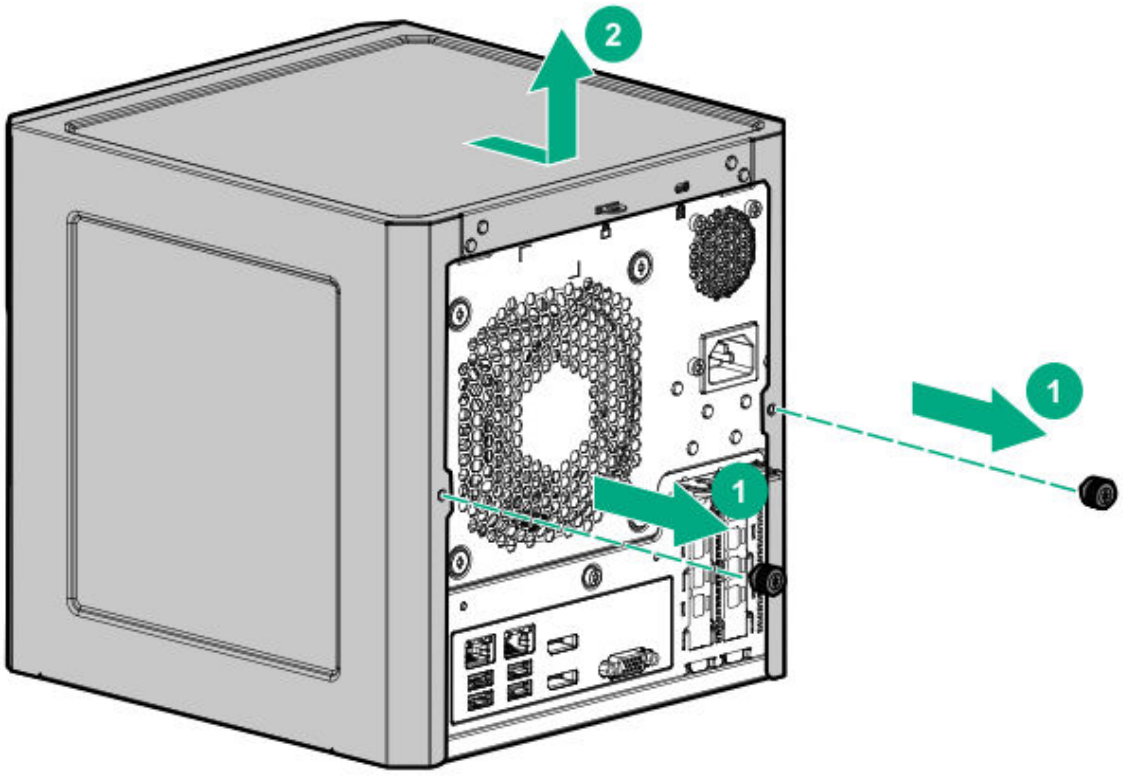

Install the chassis cover

To prevent access to the front bezel lock and the internal components, install the chassis cover.

Subtopics

Install the chassis cover

Install the chassis cover

Prerequisites

1. Verify that all internal cables are properly connected and are secured in their respective cable ties.
2. Verify that the drive cables are not blocking the fan blades.

About this task

To prevent access to the front bezel lock and the internal components, install the chassis cover.

Procedure

1. Insert the tabs on the bottom left and right sides of the chassis cover into the corresponding slots on the chassis.
2. Slide the chassis cover towards the front panel.
3. Install the chassis thumbscrews.

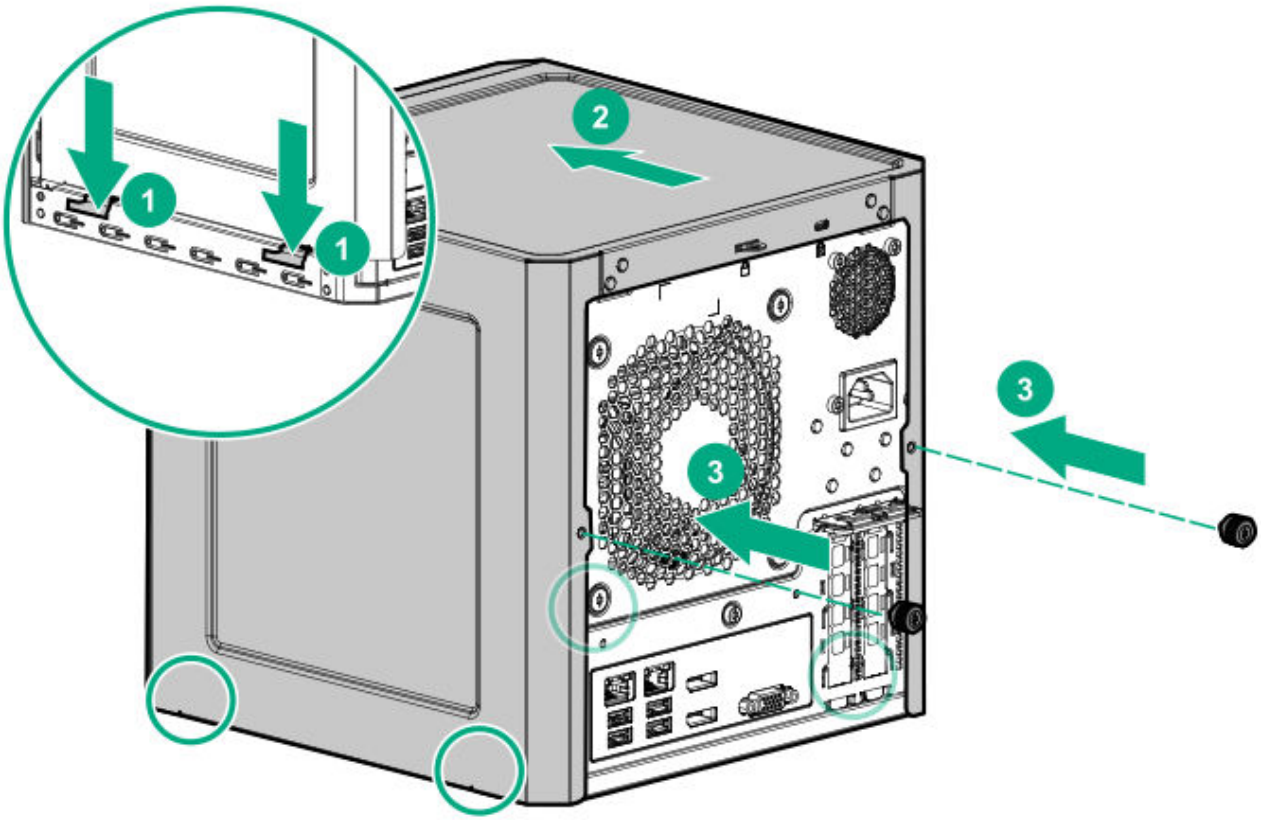

4. If removed, install the security padlock and/or the Kensington security lock.

   For more information, see the lock documentation.

Install the system board assembly

To secure the system board inside the chassis, install the system board assembly.

Subtopics

Install the system board assembly

Prerequisites

Before you perform this procedure, make sure that you have a T-15 Torx screwdriver available.

About this task

To secure the system board inside the chassis, install the system board assembly.

Procedure

1. Slide the system board assembly into the chassis.
2. Press against the system board assembly until it clicks into place.
3. Install the system board assembly screw.

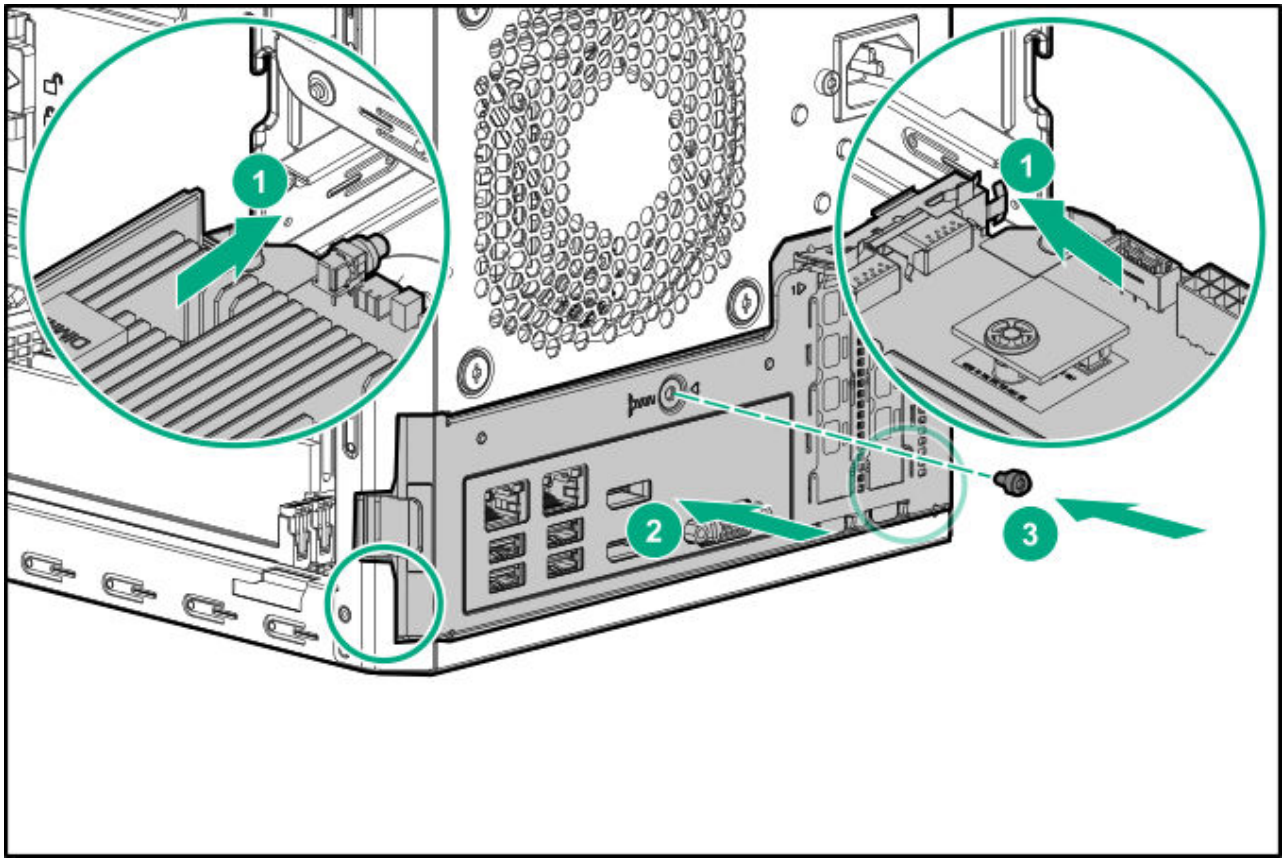

4. Connect the following system cables:
   - Power supply cable

- Optical drive or SSD SATA cable (optional)
- LFF/SFF drive SATA cable – This cable can either be connected to the system board or to an installed Smart Array storage controller board.
- Fan cable

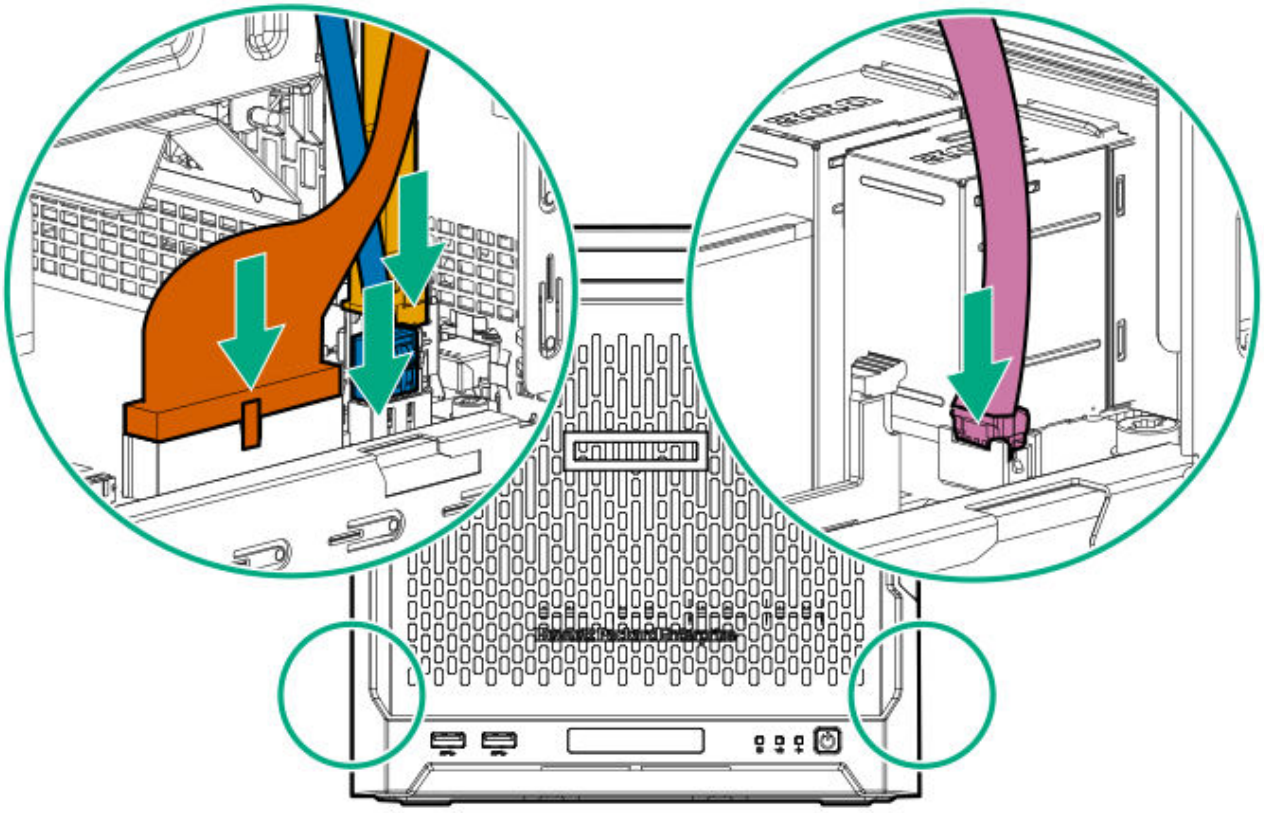

5. If removed, install the internal USB device.

Remove the system board assembly

To install or remove hardware components on the system board or to access the CMOS header, remove the system board assembly.

Subtopics

Remove the system board assembly

Remove the system board assembly

Prerequisites

Before you perform this procedure, make sure that you have a T-15 Torx screwdriver available.

About this task

To install or remove hardware components on the system board or to access the CMOS header, remove the system board assembly.

Procedure

1. If installed, remove the internal USB device.
2. To serve as a reference for system cable connections when the system board assembly is installed back into the server, take a picture of the current system board cable connections.
3. Disconnect the following system cables:
   - Power supply cable
   - Optical drive or SSD SATA cable (optional)
   - LFF/SFF drive SATA cable – This cable can either be connected to the system board or to an installed Smart Array storage controller board
   - Fan cable

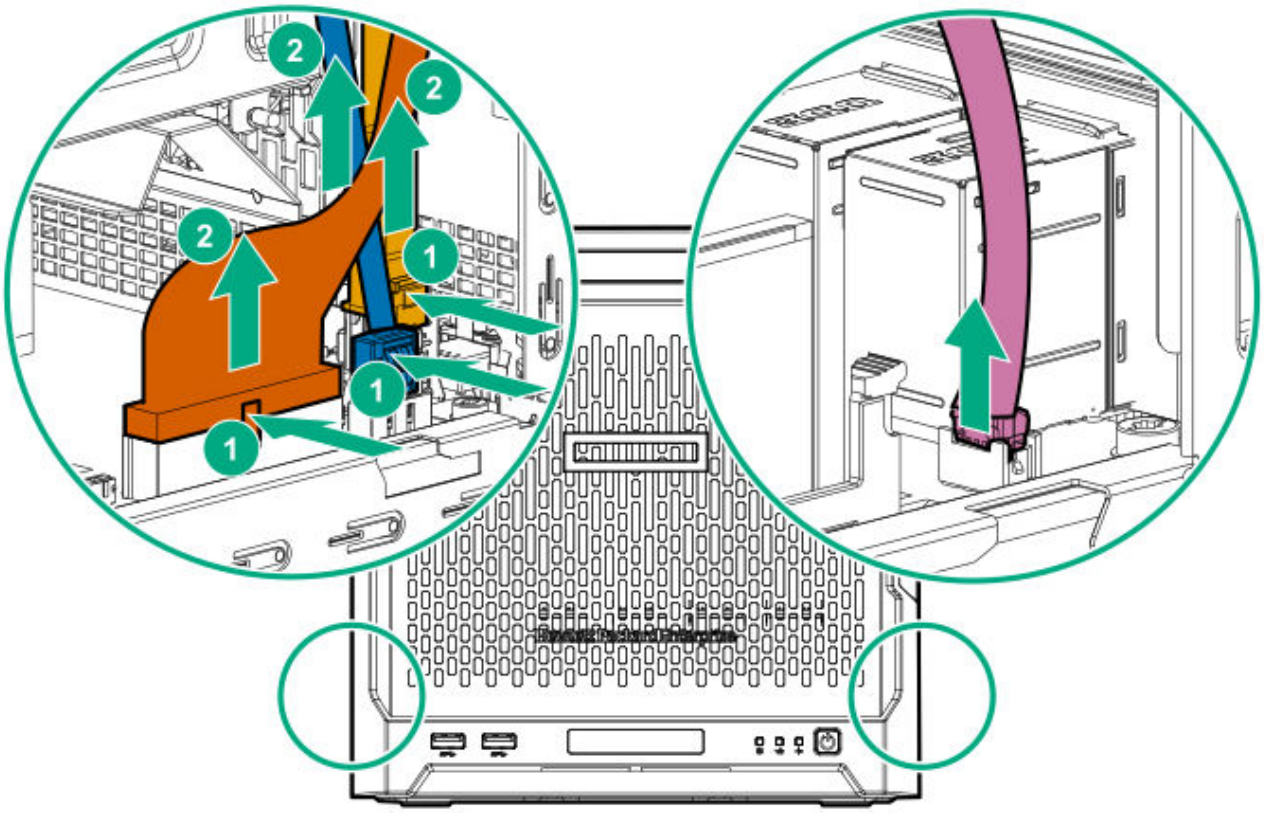

4. Remove the system board assembly screw.
5. Place a finger in the notch on both sides of the system board assembly, and then pull out the assembly.

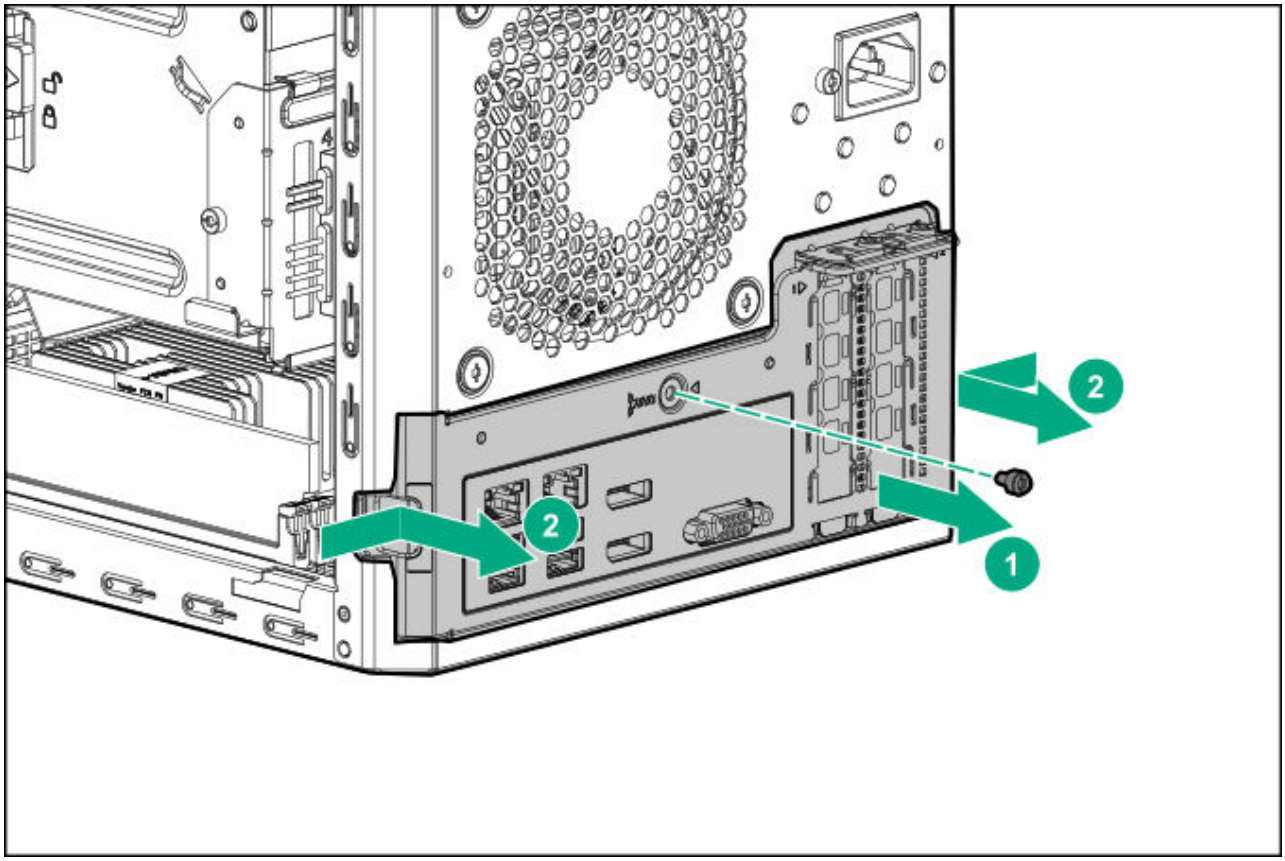

Hardware options installation

To view the warranty for your server and supported options, see Warranty information.

Subtopics

Introduction
Drive options
Media bay options
Memory support
Storage controller options
Expansion board options
Internal USB device options
External HPE RDX Backup System option
Trusted Platform Module

Introduction

Install any hardware options before initializing the server. If multiple options are being installed, read the installation instructions for all the hardware options to identify similar steps and streamline the installation process.

WARNING

To reduce the risk of personal injury from hot surfaces, allow the drives and the internal system components to cool before touching them.

CAUTION

To prevent damage to electrical components, properly ground the server before beginning any installation procedure. Improper grounding can cause electrostatic discharge.

Drive options

Subtopics

Drive support information
Drive installation guidelines
Installing an LFF drive
Installing an SFF drive

Drive support information

- This server has four drive bays that support:
  - LFF non-hot-plug drives. The maximum LFF drive capacity is 16 TB (4 x 4 TB).
  - SFF non-hot-plug drives. This drive configuration requires the SFF-to-LFF drive converter option.

  These drives are not designed to be installed or removed from the server while the system is still powered on. Power off the server before installing or removing a drive.
- The embedded Marvell 88SE9230 PCIe to SATA 6Gb/s Controller supports SATA drives only. RAID 0, 1, and 10 levels are supported.

To configure drives connected to the onboard LFF/SFF drive SATA port, use the Marvell BIOS Utility or the Marvell Storage Utility.

- For SAS drive and advanced RAID support, install an HPE Smart Array Gen10 type-p SR controller option.

  To configure drives connected to the Smart Array controller option, use the Smart Storage Administrator.

Drive installation guidelines

- Populate drive bays based on the drive numbering sequence. Start from the drive bay with the lowest device number.
- All drives grouped into the same drive array must meet the following criteria:
  - They must be either all hard drives or all solid-state drives.
  - Drives should be the same capacity to provide the greatest storage space efficiency when drives are grouped together into the same drive array.
- The system automatically sets all device numbers.

Installing an LFF drive

About this task

To add internal data storage to the server, install one or more LFF drives in the drive bays.

Procedure

1. Power down the server.
2. Disconnect the power cord from the AC source, and then from the server.
3. Disconnect all peripheral cables from the server.
4. Remove the front bezel.
5. Install the LFF drive.
6. Install the front bezel.
7. Connect all peripheral cables to the server.

8. Connect the power cord to the server power jack, and then to the AC source.
9. Power up the server.
10. Determine the status of the server drives from the drive LED definitions.
11. To configure drive arrays, do one of the following:
    - If the drives are connected to the onboard LFF/SFF drive SATA port, use the Marvell Storage Utility or the Marvell BIOS Utility.
    - If the drives are connected to a Smart Array storage controller board, use the Smart Storage Administrator.

Subtopics

Install the LFF drive

Install the LFF drive

Prerequisites

Before you perform this procedure, make sure that you have the following items available:

- T-15 Torx screwdriver
- LFF drive option

About this task

The LFF drives supported in this server do not require a drive caddy or a drive carrier to install. You only have to use the drive mounting screws on the chassis.

Procedure

1. Remove four drive screws from the front panel.

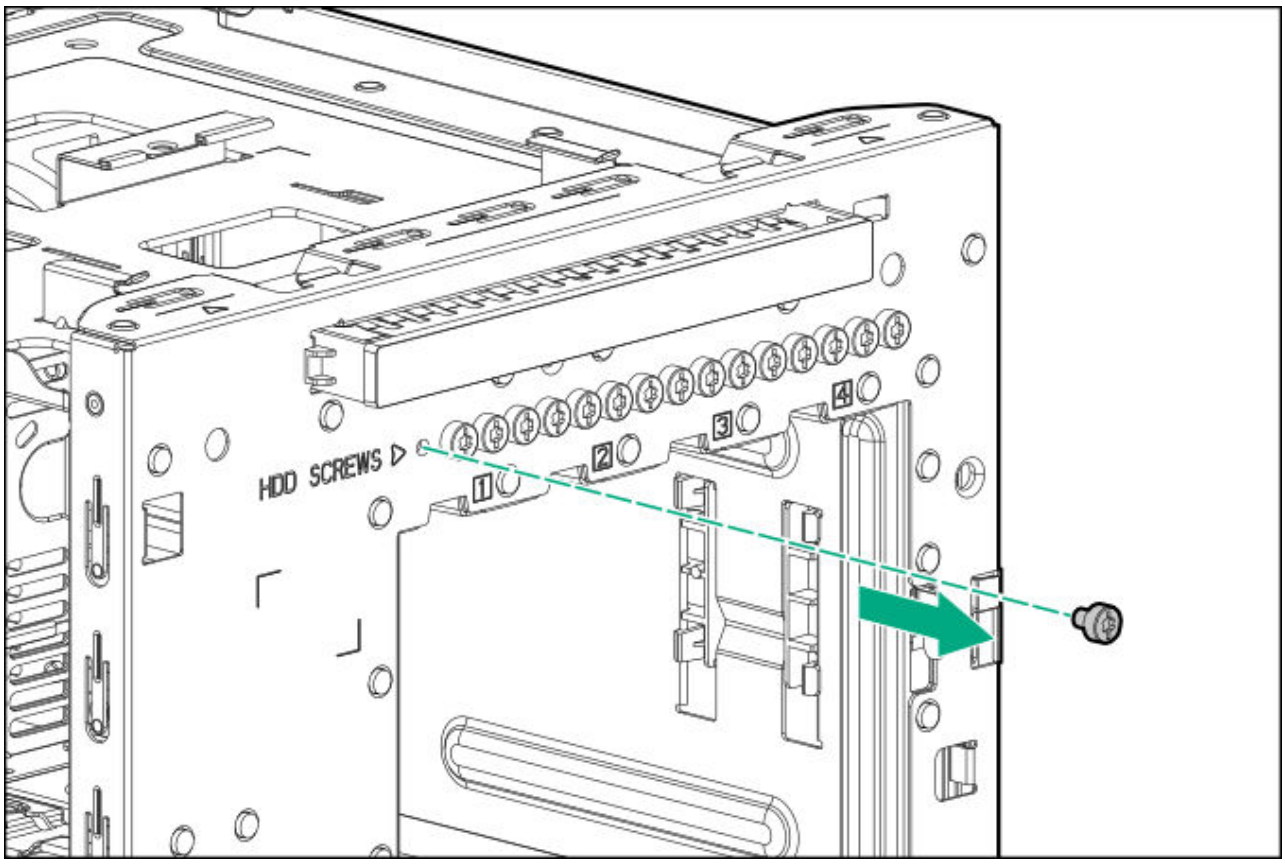

2. Install the screws in the drive.

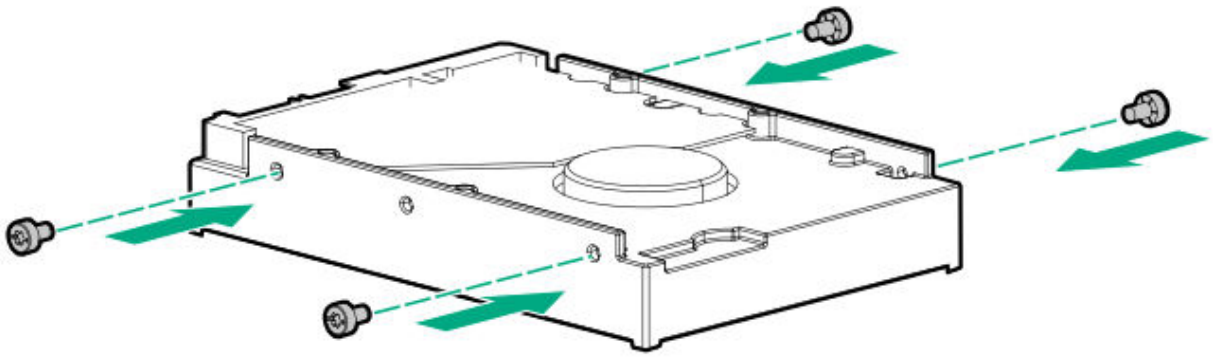

3. Slide the drive into the drive bay until it clicks into place.

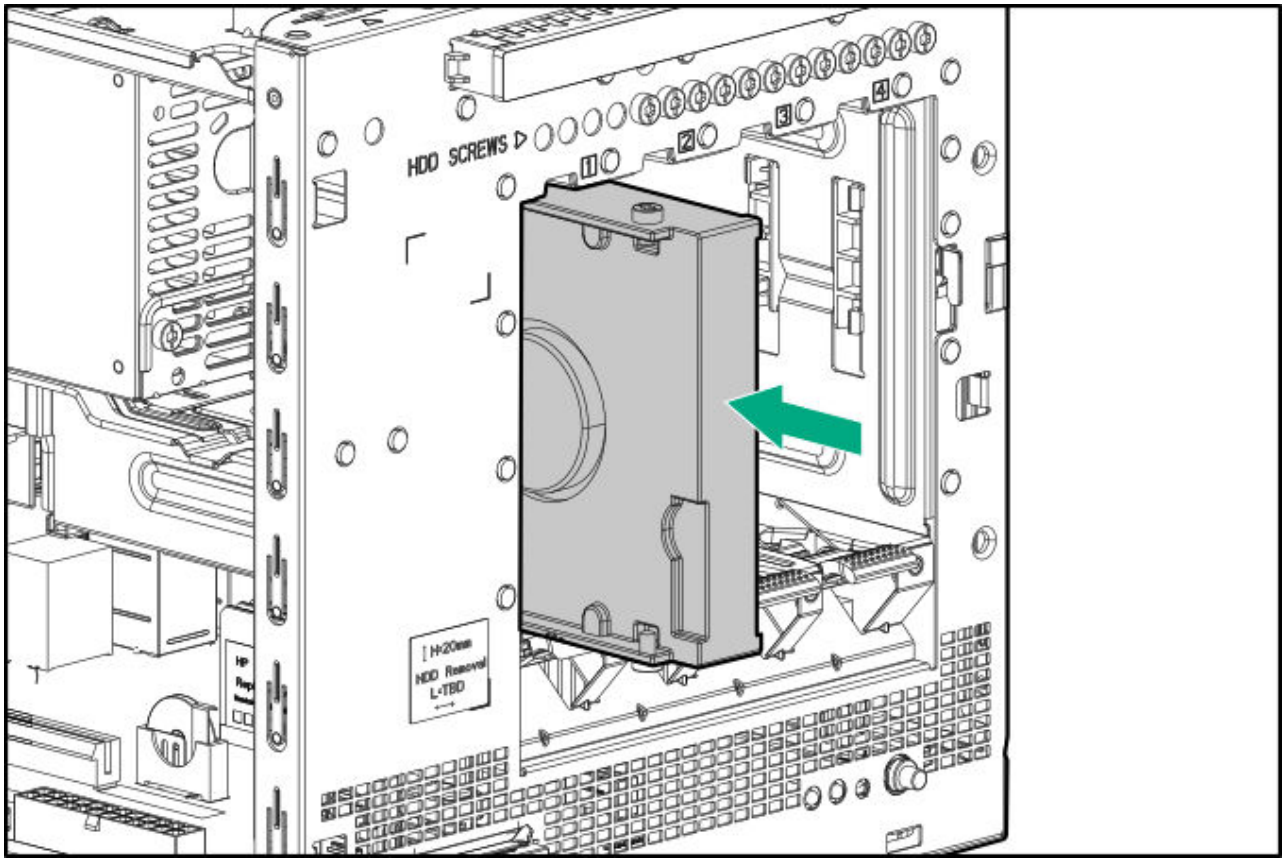

Installing an SFF drive

About this task

To install SFF drives in the drive bays, install the SFF drive converter option. In general, SFF drives give greater power and space savings. SFF drives can require as little as half the power and generate significantly less heat than LFF drives.

Procedure

1. Power down the server.
2. Disconnect the power cord from the AC source, and then from the server.
3. Disconnect all peripheral cables from the server.
4. Remove the front bezel.
5. Install the SFF drive.
6. Install the front bezel.

7. Connect all peripheral cables to the server.
8. Connect the power cord to the server power jack, and then to the AC source.
9. Power up the server.
10. Determine the status of the server drives from the drive LED definitions.
11. To configure drive arrays, do one of the following:
    - If the drives are connected to the onboard LFF/SFF drive SATA port, use the Marvell Storage Utility or the Marvell BIOS Utility.
    - If the drives are connected to a Smart Array storage controller board, use the Smart Storage Administrator.

Subtopics

Install the SFF drive

Install the SFF drive

Prerequisites

Before you perform this procedure, make sure that you have the following items available:

- T-10 Torx screwdriver
- T-15 Torx screwdriver
- SFF drive converter option kit. This kit includes:
    - Drive converter tray
    - T-10 screws (4)
- SFF drive option

Procedure

1. Install the SFF drive in the drive converter tray.

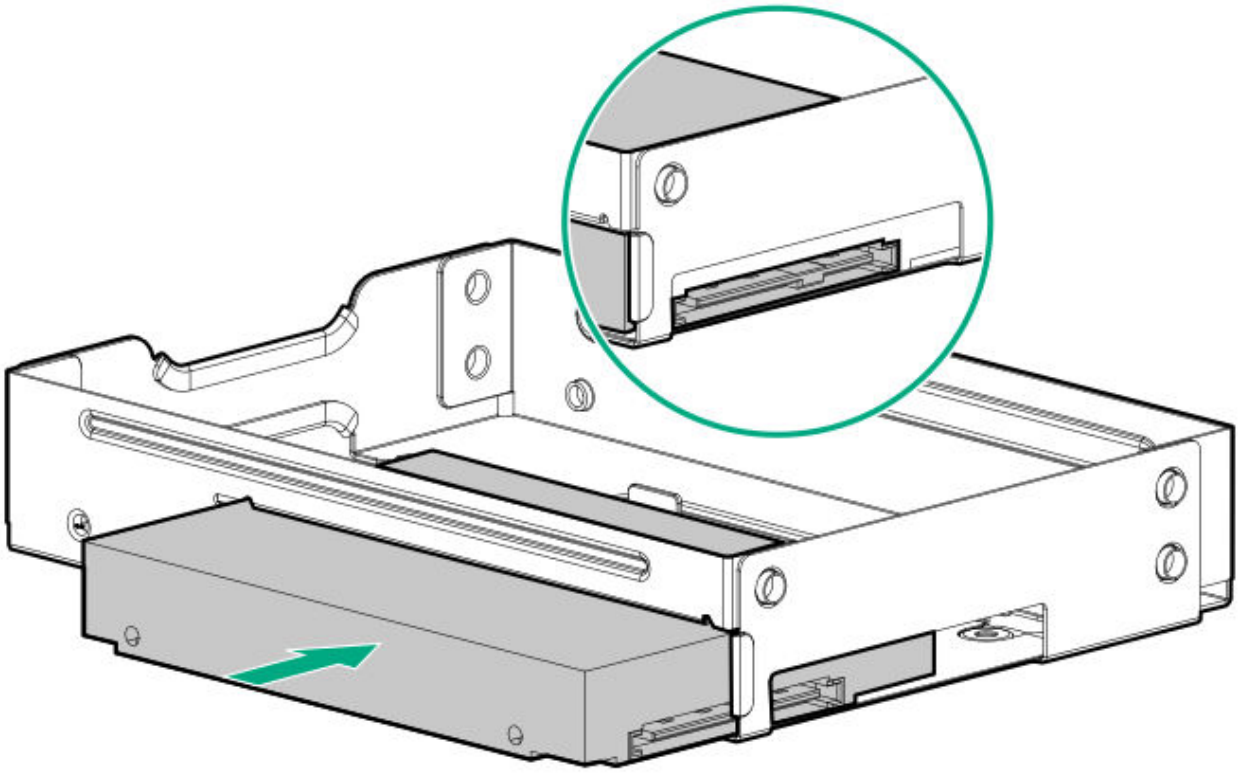

2. Follow the callout sequence in the following illustration to install the screws included in the converter kit on the bottom side of the converter tray.

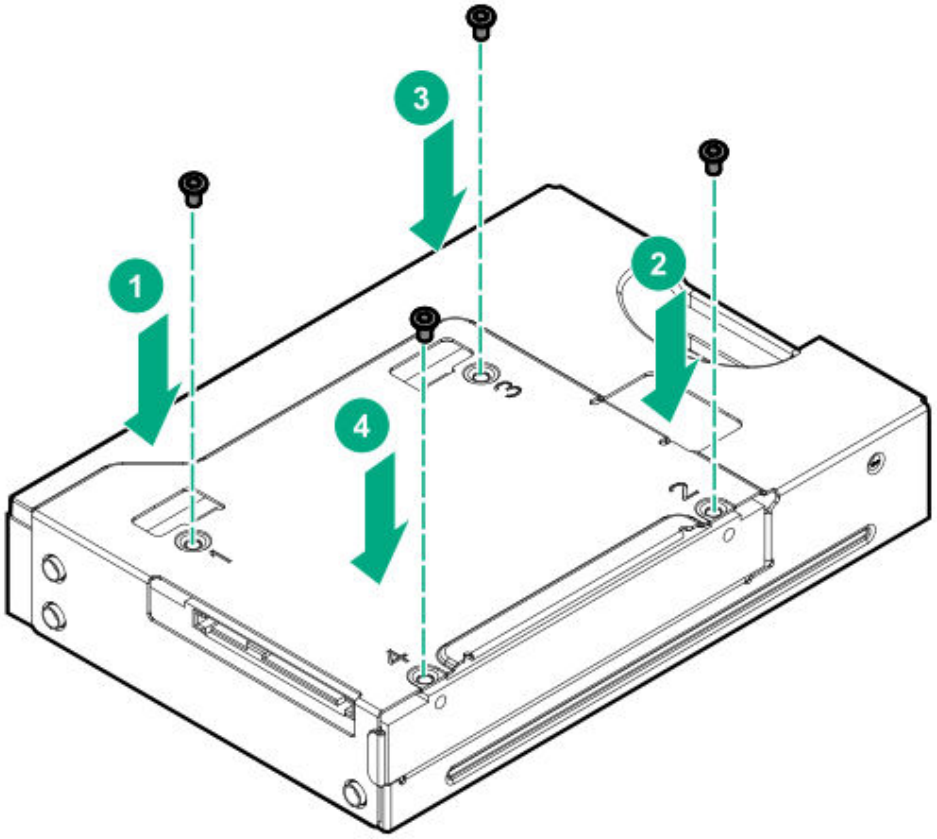

3. Remove three drive screws from the front panel.

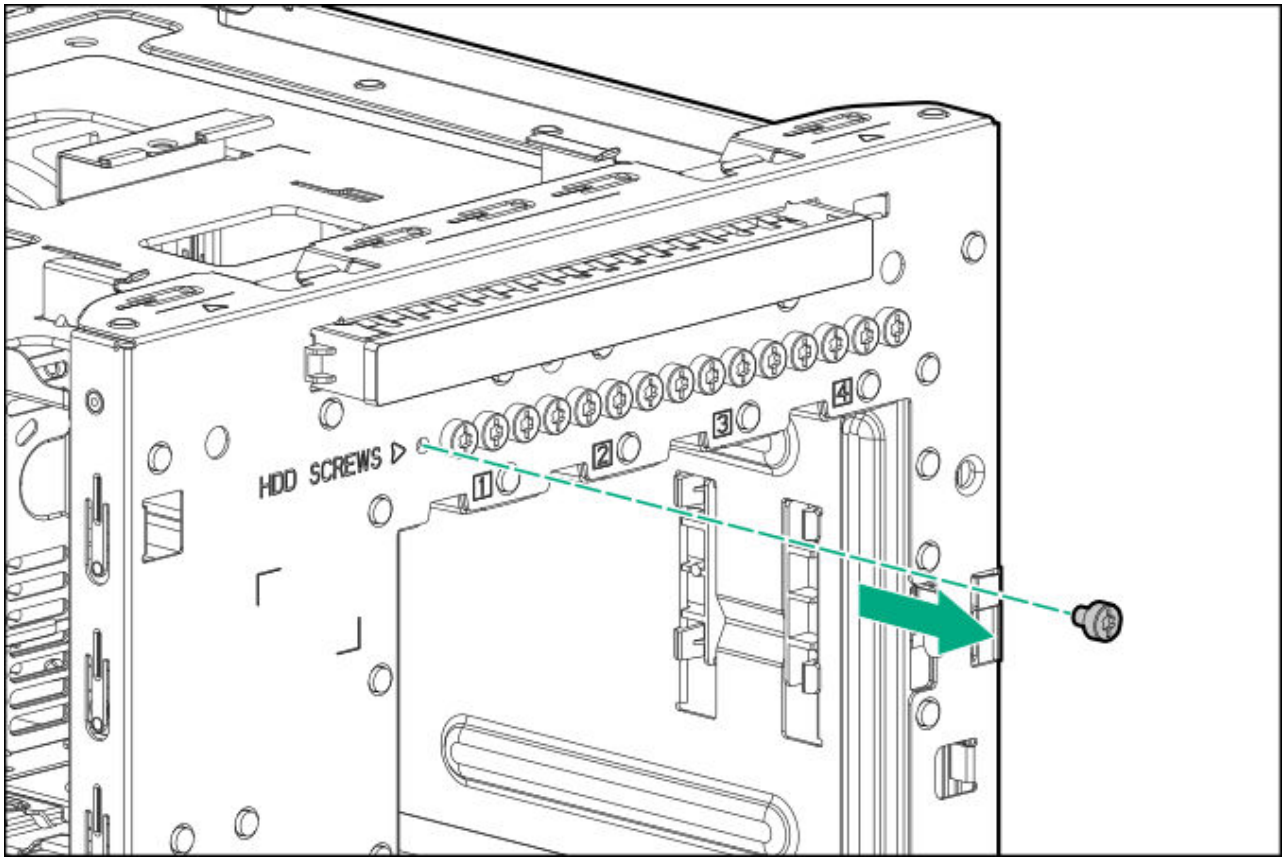

4. Install the three screws removed from the front panel on the left and right sides of the converter tray.

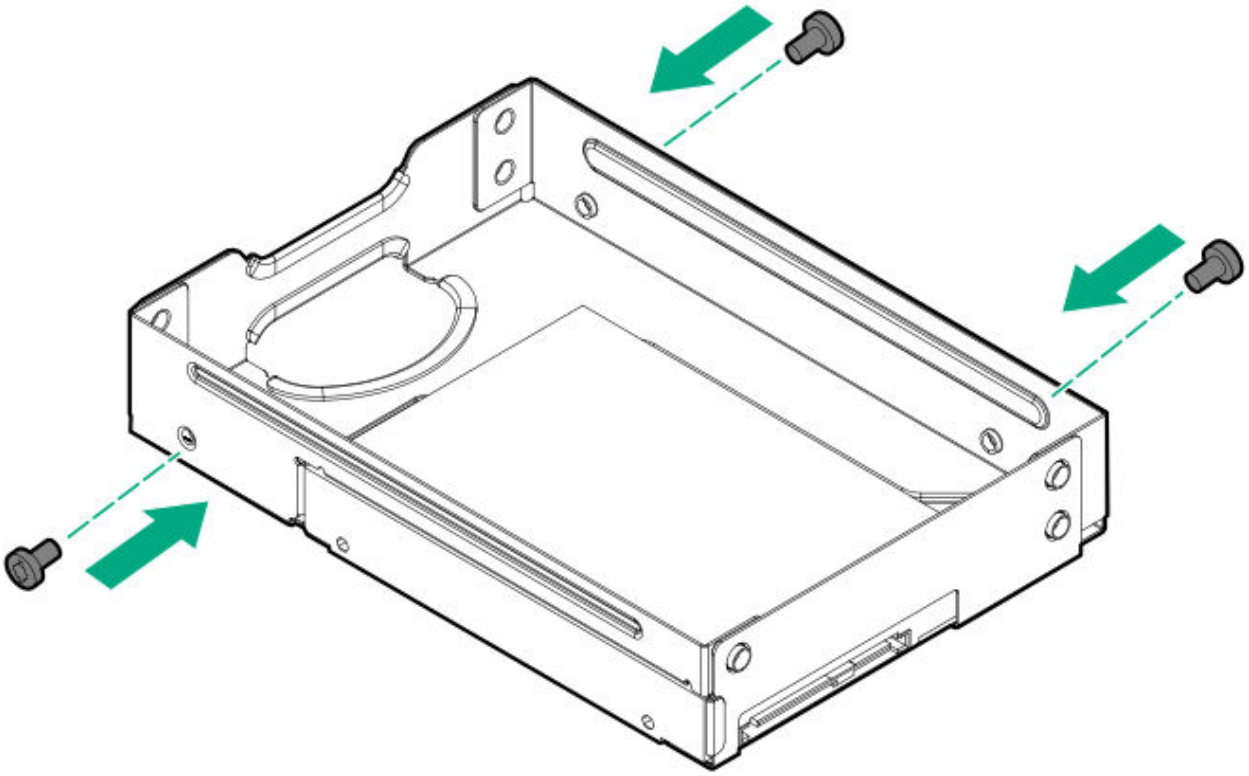

5. Slide the drive into the drive bay until it clicks into place.

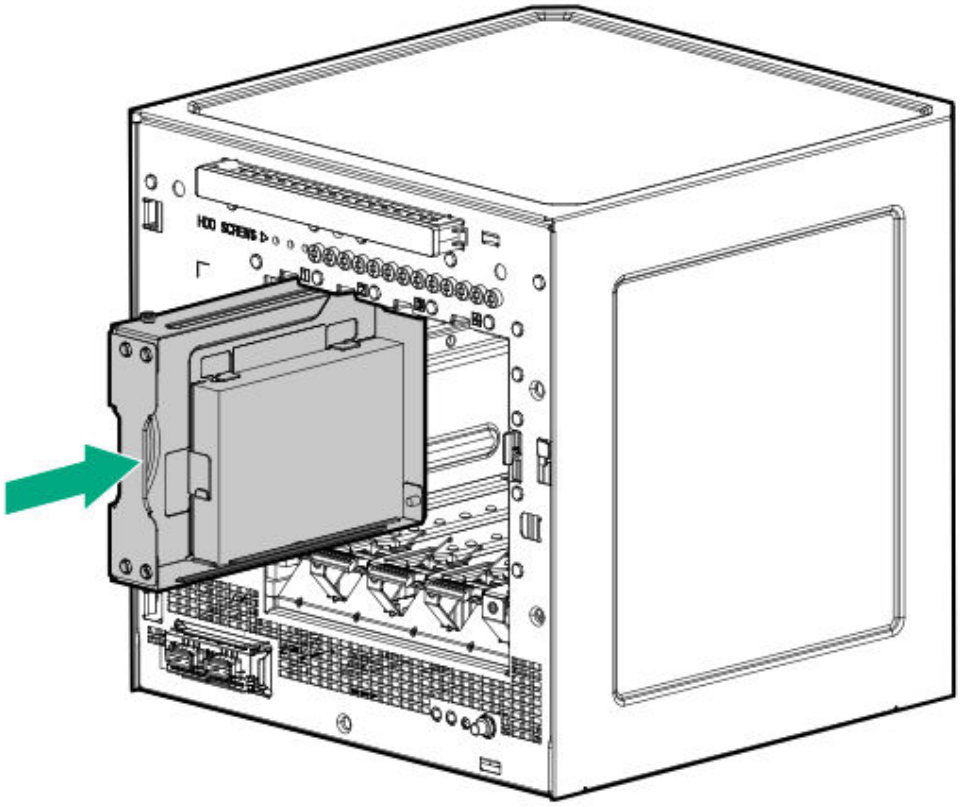

Media bay options

Use the media bay to install one of these options:

- 7-mm slim-type SATA SSD
- 9.5 mm slim-type SATA optical drive

Subtopics

Installing an SSD
Installing an optical drive

Installing an SSD

About this task

The media bay supports a 7-mm slim-type SATA solid-state drive option. SSDs have no moving parts. Information is stored in microchips. Traditional hard disk drives use a mechanical arm with a read/write head to move around and read information from the right location on a rotating storage platters. This lack of rotating media in SSDs:

- Greatly reduces the SSD's power consumption
- Enable SSDs to tolerate significantly higher operating shock and vibration levels

SSDs are suitable for server workloads with highly random data under a variety of write-workload applications.

Procedure

1. Power down the server.
2. Disconnect the power cord from the AC source, and then from the server.
3. Disconnect all peripheral cables from the server.
4. Remove the chassis cover.
5. Install the SSD.
6. Install the chassis cover.
7. Connect all peripheral cables to the server.
8. Connect the power cord to the server power jack, and then to the AC source.
9. Power up the server.

Subtopics

Install the SSD

Install the SSD

Prerequisites

Before you perform this procedure, make sure that you have the following items available:

- T-10 Torx screwdriver
- T-15 Torx screwdriver

- SSD enablement option kit. This kit includes:
  - SSD tray
  - SSD power cable
  - SSD SATA cable
  - T-10 screws (4, for securing the SSD)
  - T-15 Torx screw (1, for securing the SSD tray)
- SSD option

Procedure

1. Place the SSD in the SSD tray, and then install the SSD screws.

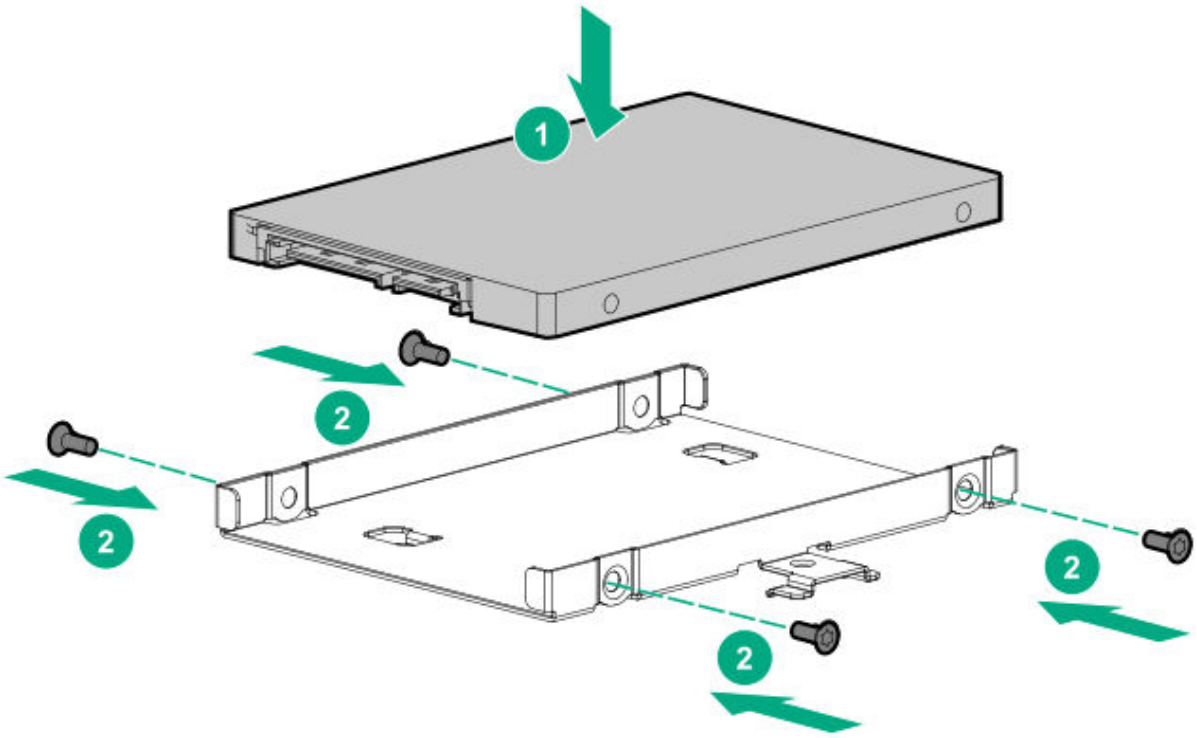

2. Install the SSD assembly in the media bay, and then secure it with the screw.

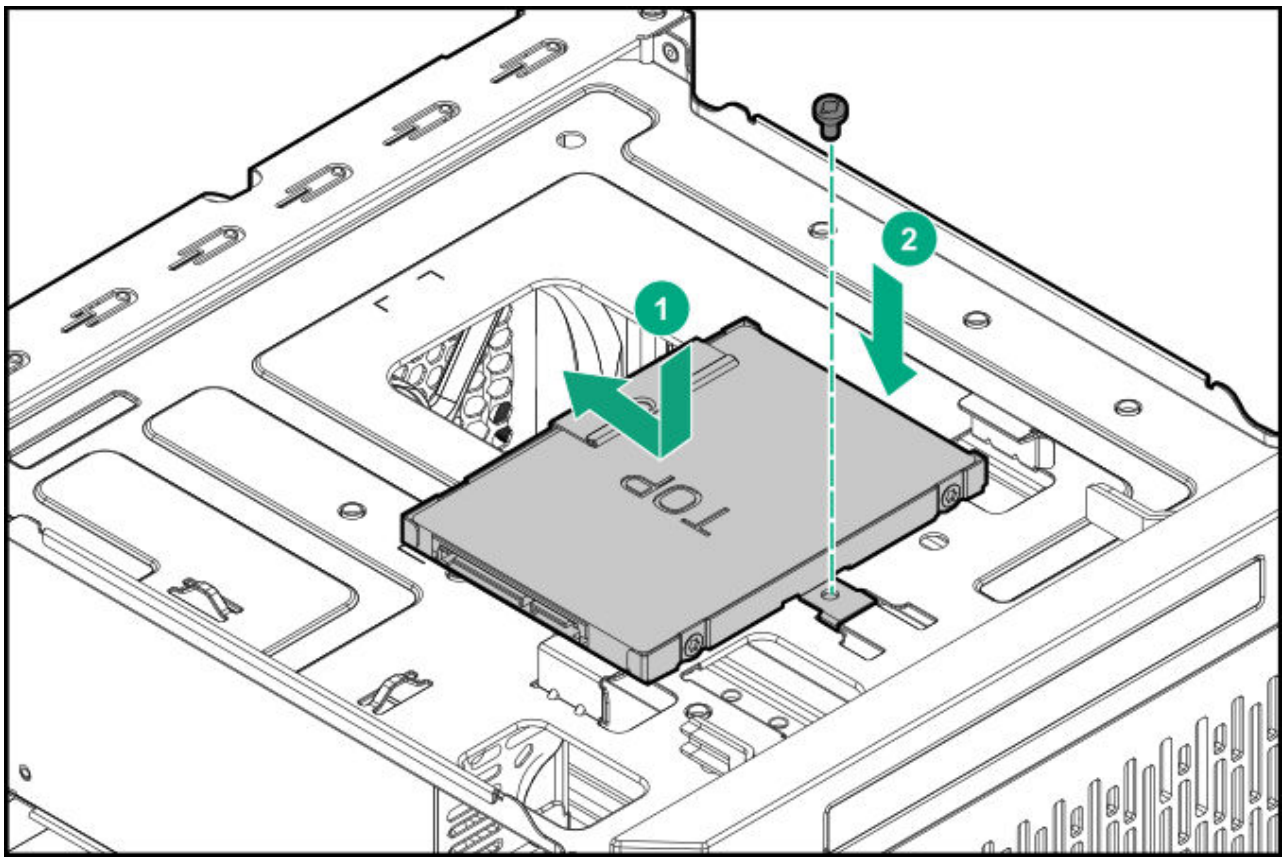

3. Connect the SSD power cable:

   a. Open the cable ties.

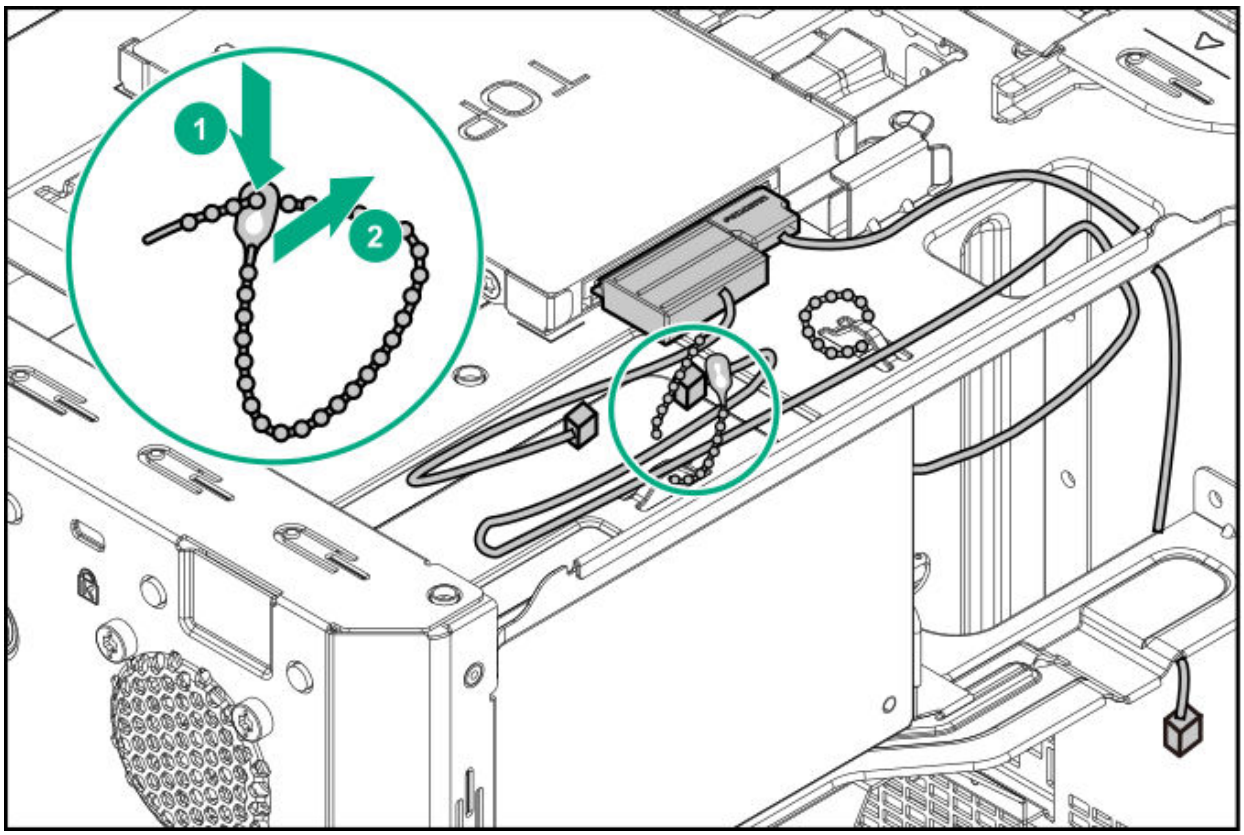

b. Connect the power cable to the SSD, and then to the power supply cable labeled P3.

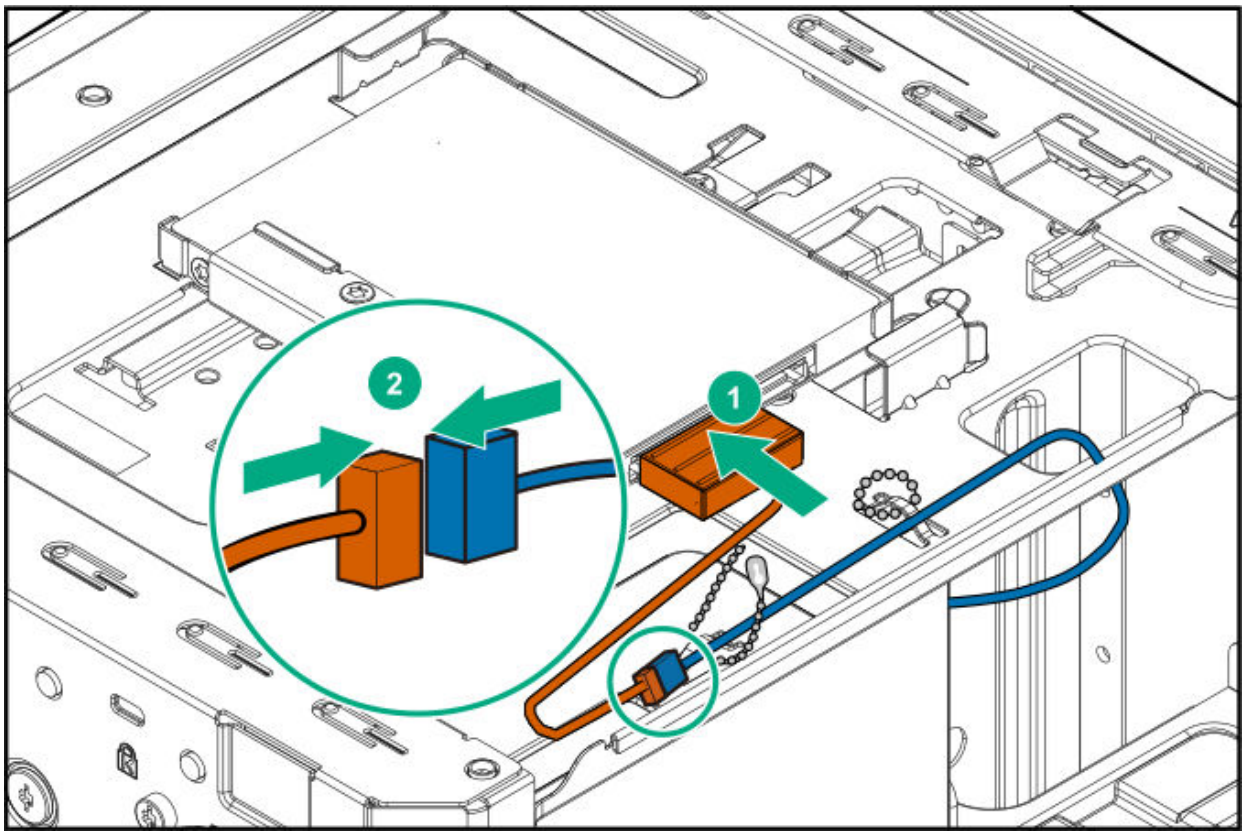

4. Connect the SSD SATA cable:

   a. Connect the SATA cable to the SSD.

   b. Route the SATA cable through the left side chassis opening down to the system board.

   c. Connect the SATA cable to the SATA port.

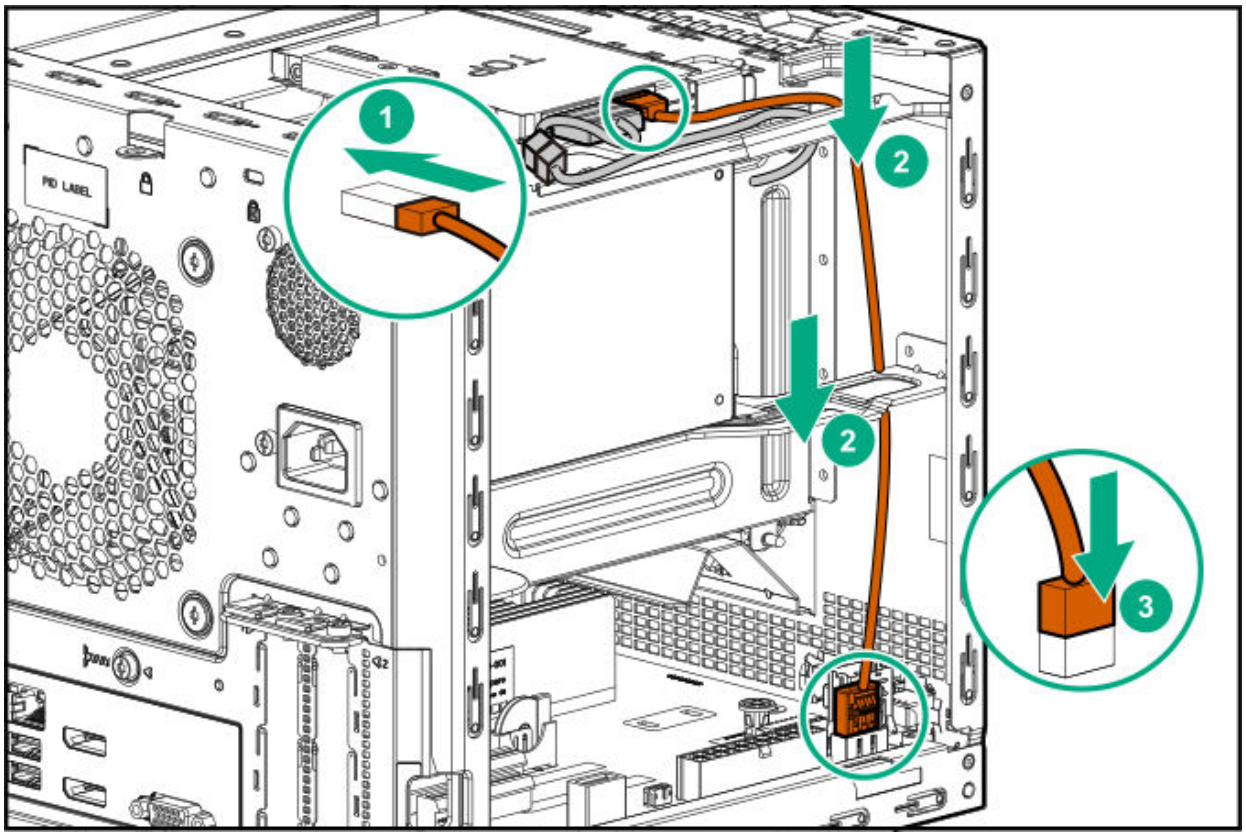

5. Bundle the extra length of the SSD power and SATA cables, and then secure them in the cable ties.

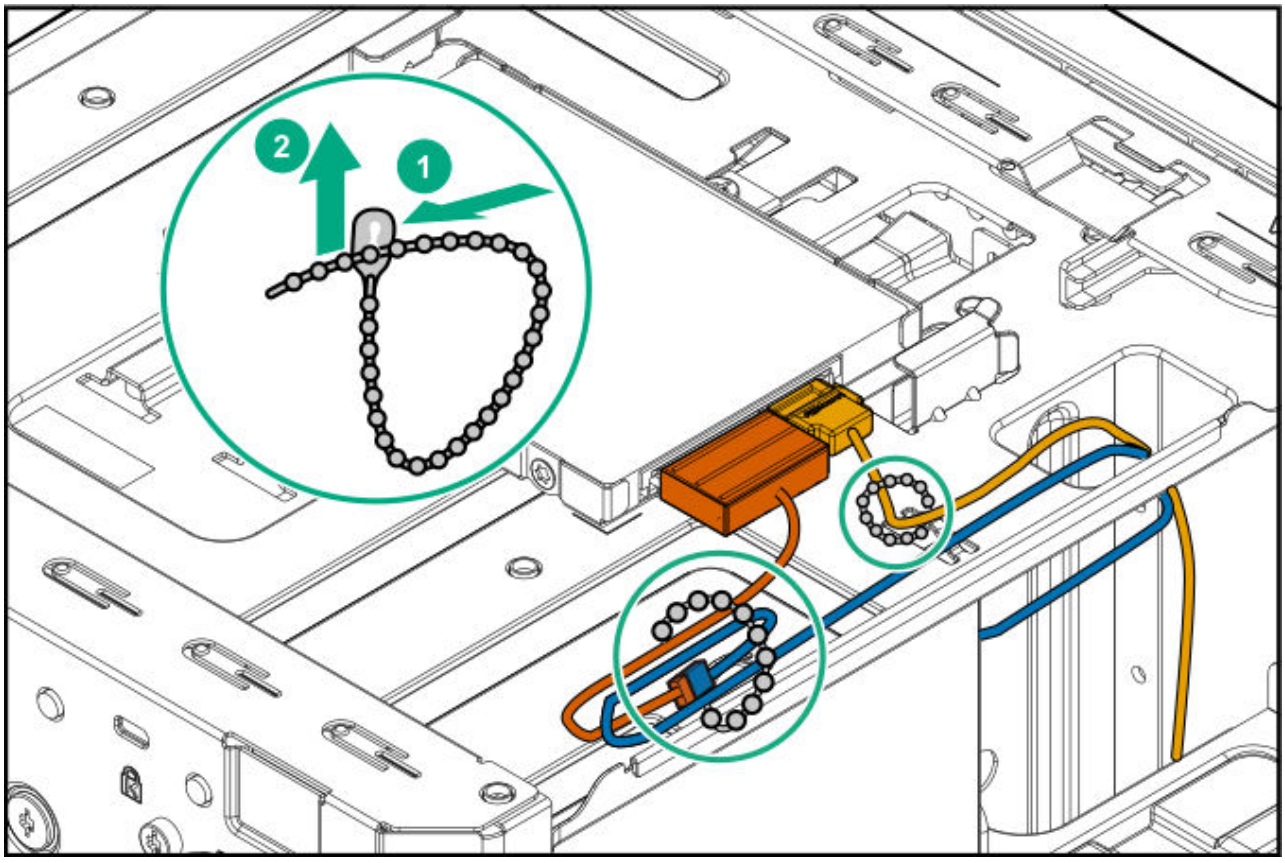

Installing an optical drive

About this task

The media bay supports a 9.5 mm slim-type SATA optical drive option. This option allows you to retrieve or store data on optical discs like CDs and DVDs.

Procedure

1. Power down the server.
2. Disconnect the power cord from the AC source, and then from the server.
3. Disconnect all peripheral cables from the server.
4. Remove the chassis cover.
5. Remove the front bezel.
6. Install an optical drive.
7. Install the front bezel.

8. Install the chassis cover.
9. Connect all peripheral cables to the server.
10. Connect the power cord to the server power jack, and then to the AC source.
11. Power up the server.

Subtopics

Install an optical drive

Install an optical drive

Prerequisites

Before you perform this procedure, make sure that you have the following items available:

- T-15 Torx screwdriver
- Phillips No. 2 screwdriver
- Optical drive option kit. This kit includes:
  - Optical drive
  - Optical drive bracket
  - Phillips No. 2 screws (2, for securing the optical drive bracket)
  - T-15 screw (1, for securing the optical drive)

Procedure

1. Facing the server, press and hold the release latches on both sides of the optical drive blank, and then push the blank out of the media bay.

   Retain the blank for future use.

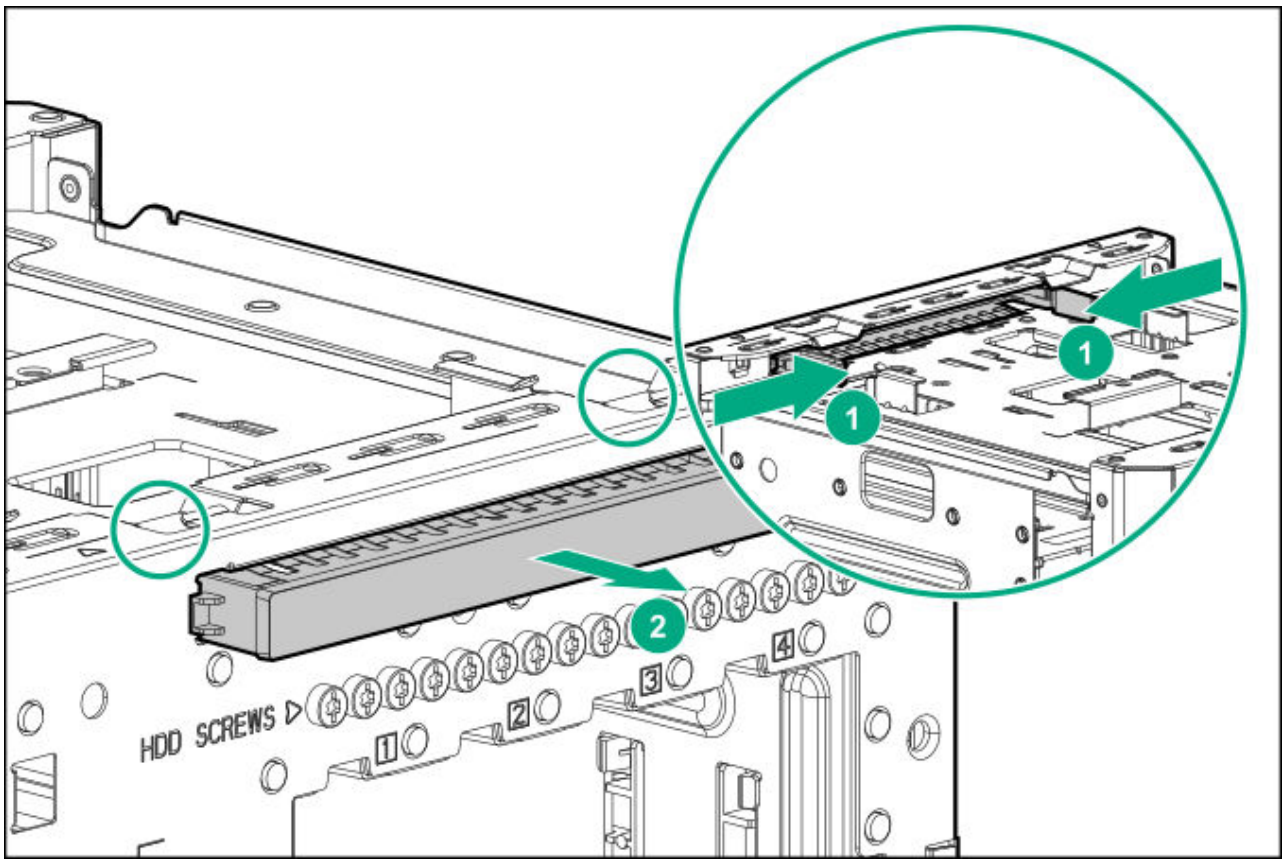

2. Attach the bracket to the optical drive.

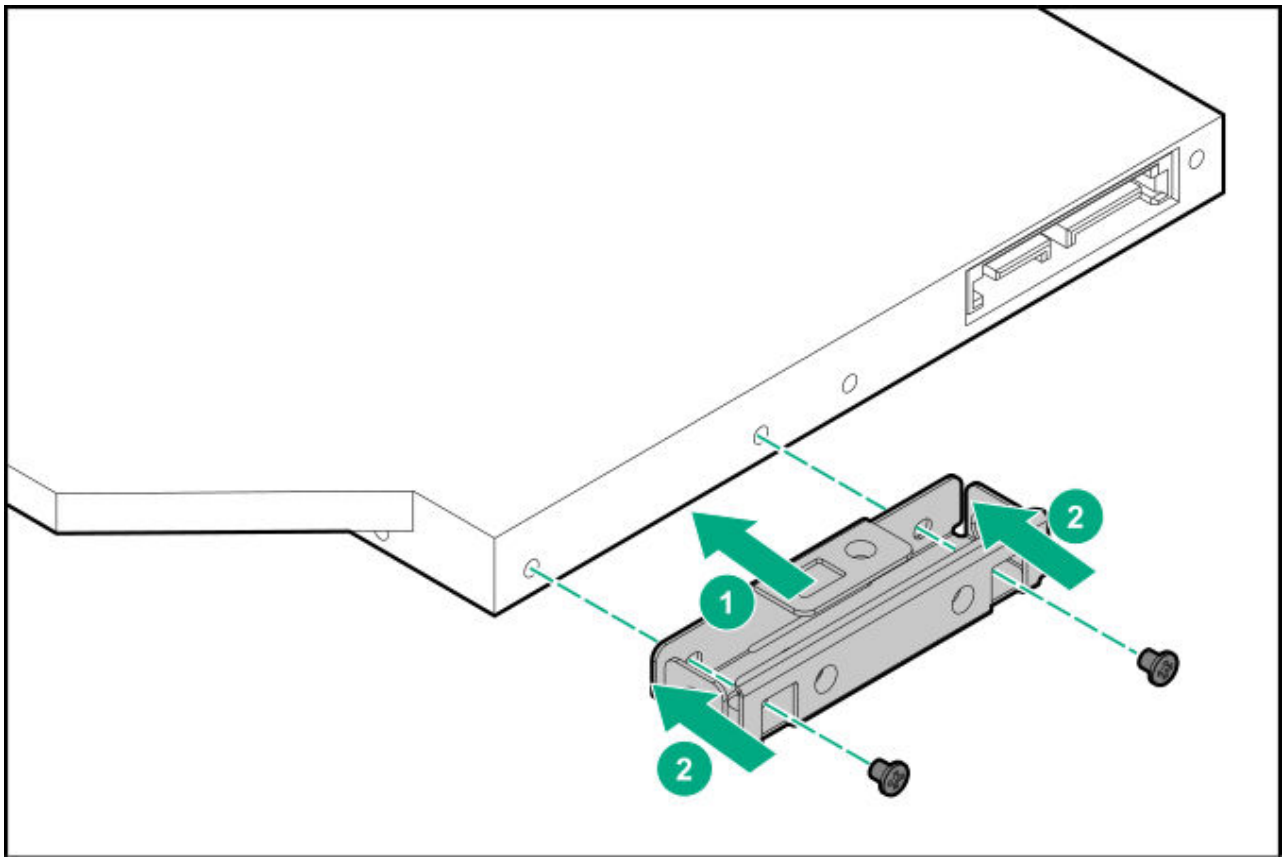

3. Slide the optical drive into the media bay.
4. Install the optical drive screw.

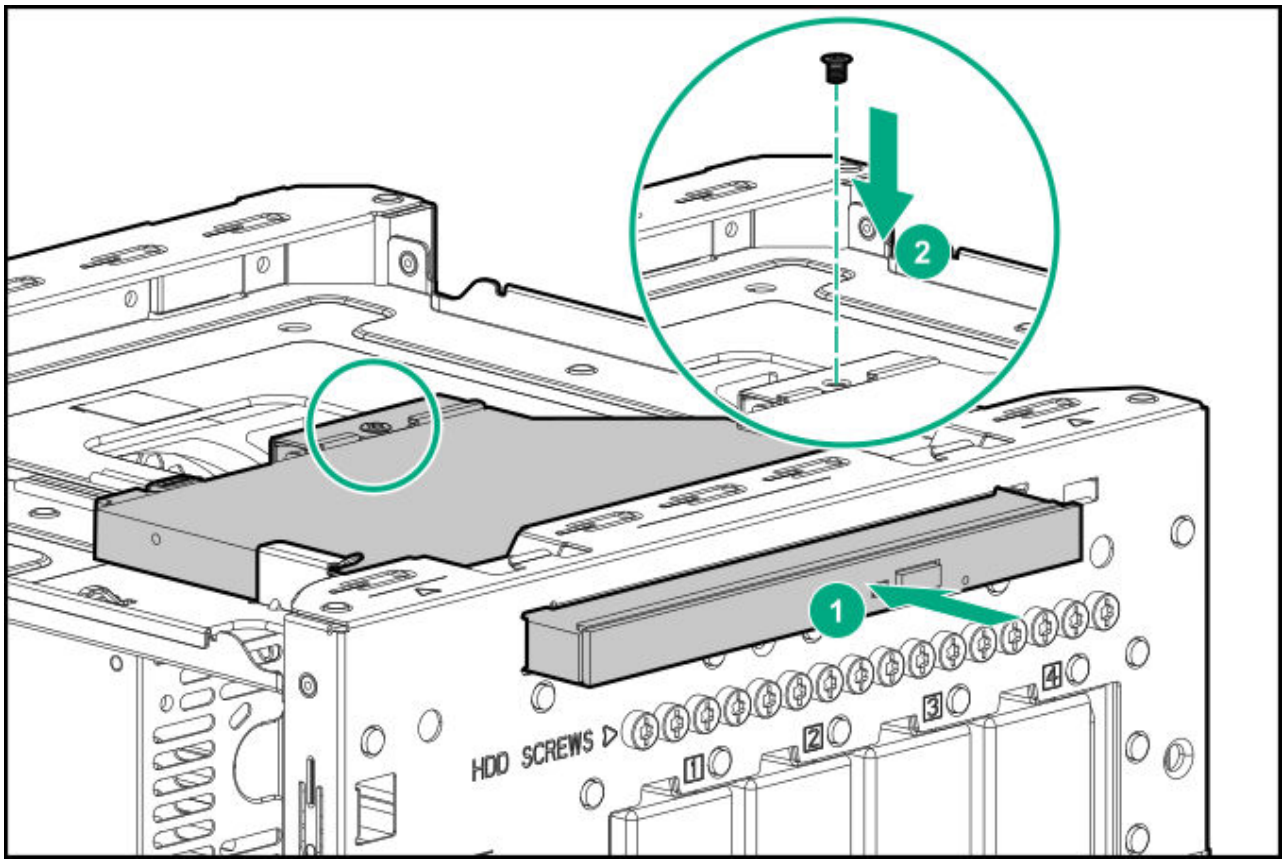

5. Connect the optical drive SATA Y-cable:
   a. Connect the common end of the cable to the optical drive.

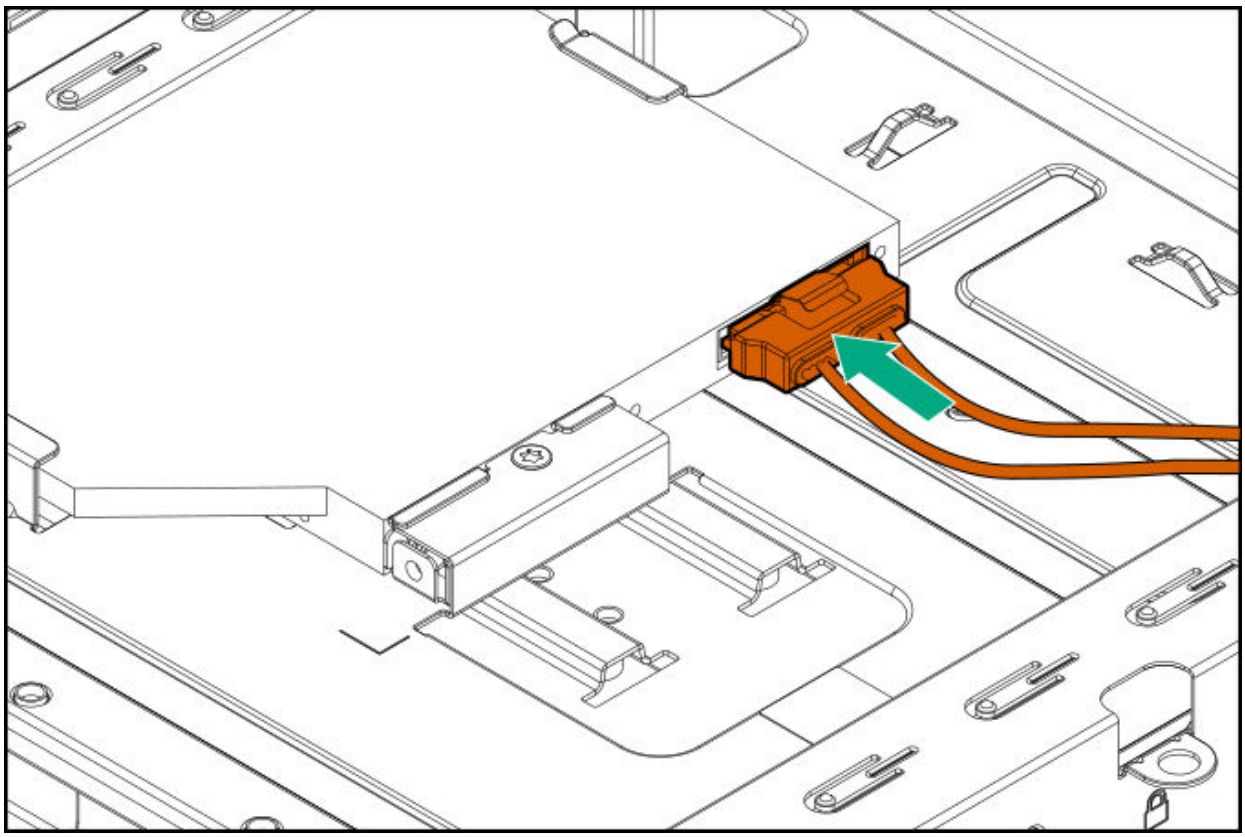

b. Open the cable tie.

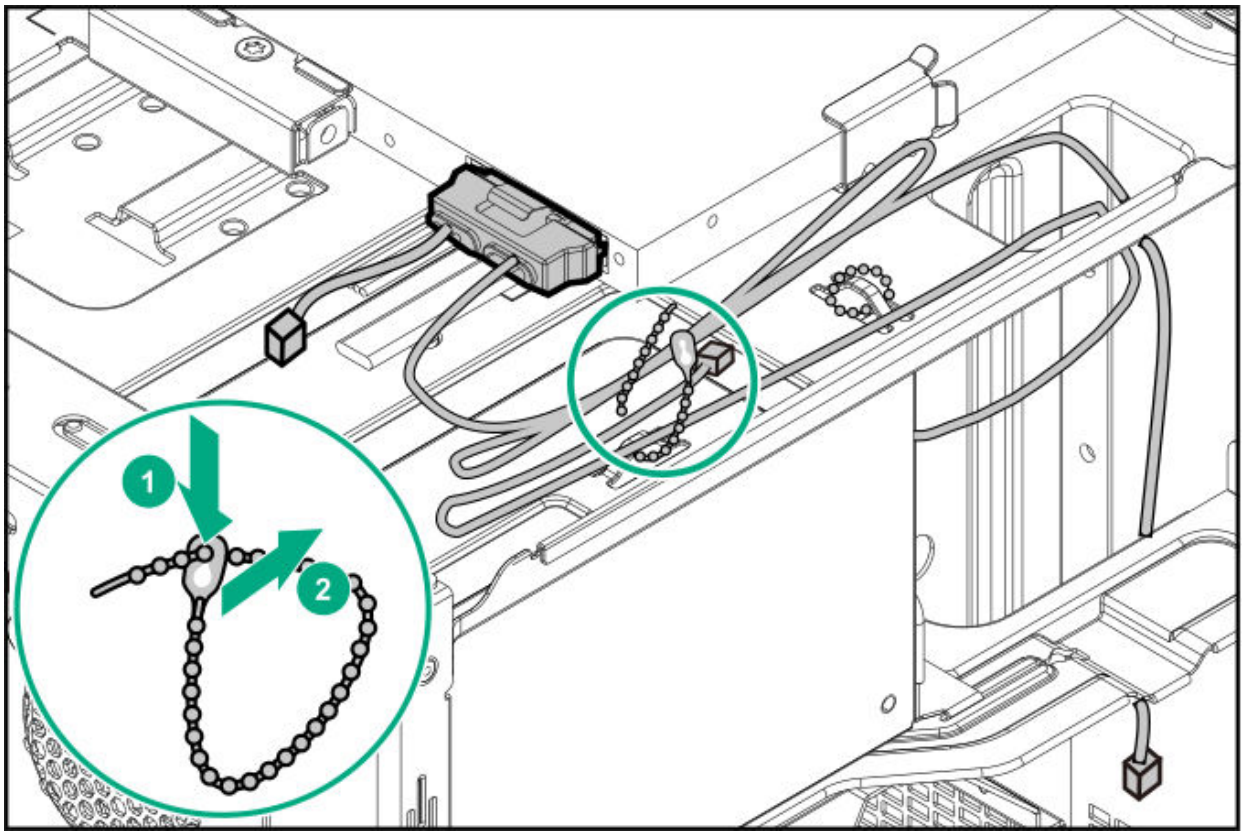

c. Connect the power end of the SATA cable to the power supply cable labeled P3.

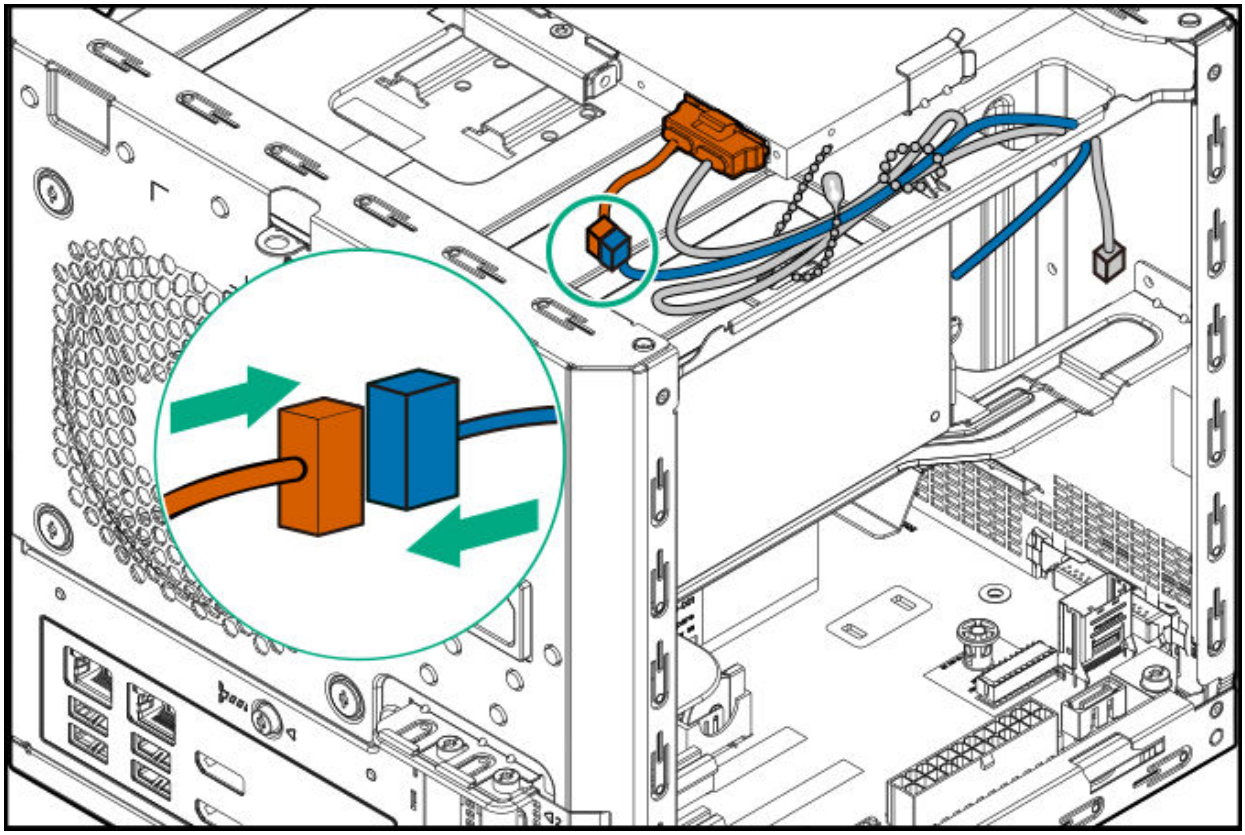

d. Route the data end of the SATA Y-cable through the left side chassis opening down to the system board.

e. Connect the data end of the cable to the SATA port.

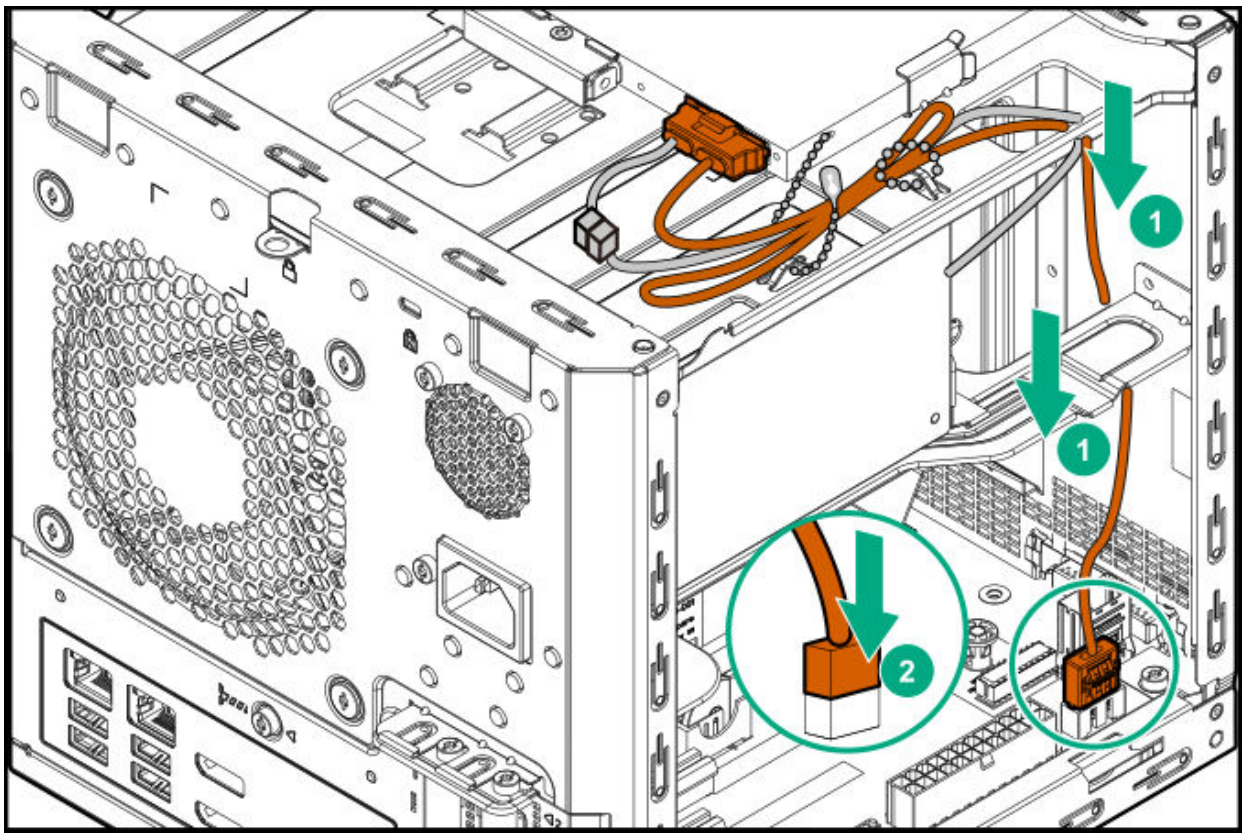

f. Bundle the extra length of the SATA Y-cable and the power supply P3 cable, and then secure them in the cable tie.

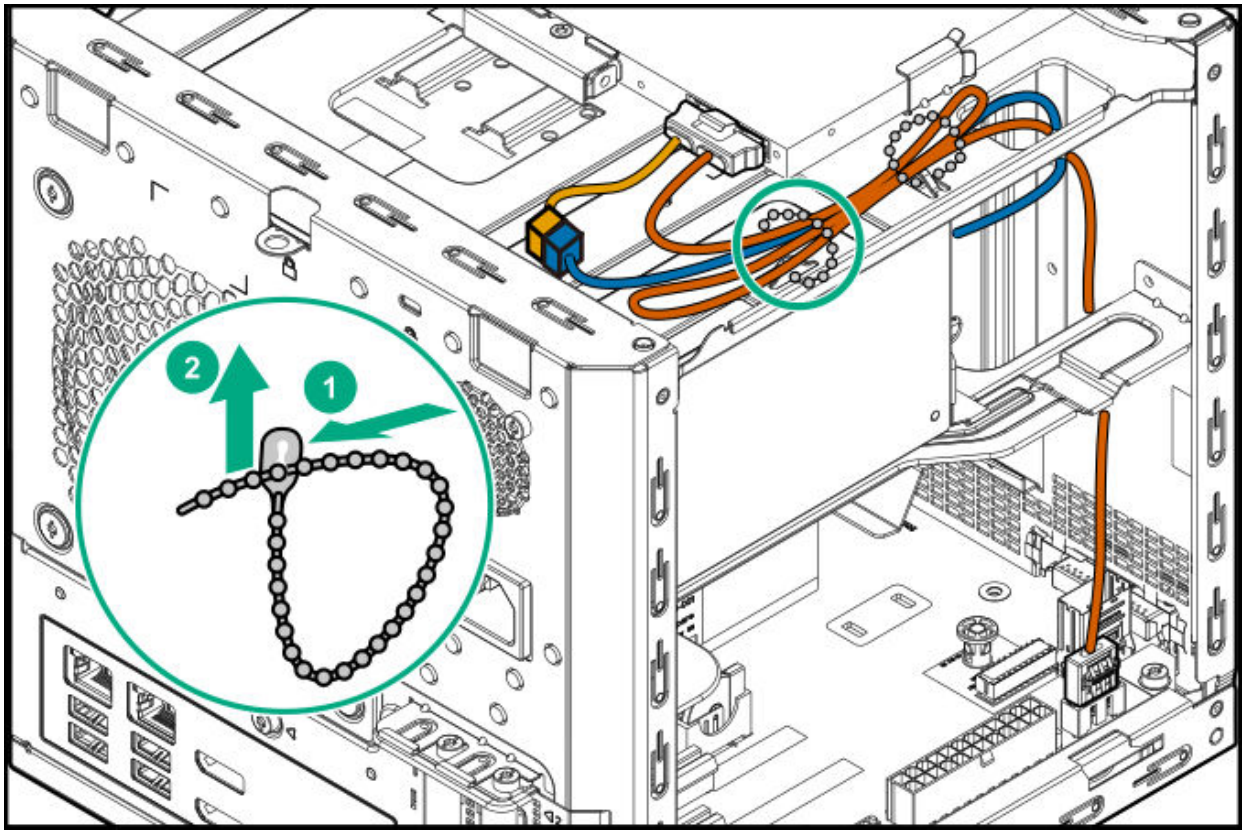

Memory support

The server has two DIMM slots supporting standard PC4-2400T UDIMM for a maximum memory capacity of 32 GB.

Maximum memory speed is determined by the processor:

- AMD Opteron X3216 supports memory speed of up to 2400 MT/s.
- AMD Opteron X3418 and AMD Opteron X3421 support memory speed of up to 1600 MT/s.

Subtopics

DIMM population information
DIMM handling guidelines
DIMM installation guidelines
Installing a DIMM

DIMM population information

For specific DIMM population information, see the relevant memory technical paper in:

https://www.hpe.com/docs/server-memory

DIMM handling guidelines

When handling a DIMM, observe the following guidelines:

- Avoid electrostatic discharge.
- Always hold DIMMs by the side edges only.
- Avoid touching the connectors on the bottom of the DIMM.
- Never wrap your fingers around a DIMM.
- Avoid touching the components on the sides of the DIMM.

- Never bend or flex the DIMM.

> **CAUTION**
> Failure to properly handle DIMMs can cause damage to the components on the DIMM, as well as the system board connector.

DIMM installation guidelines

When installing a DIMM, observe the following guidelines:

- Before seating the DIMM, open the DIMM slot and align the DIMM with the slot.
- To align and seat the DIMM, use two fingers to hold the DIMM along the side edges.
- To seat the DIMM, use two fingers to apply gentle pressure along the top of the DIMM.

For more information, see the **Hewlett Packard Enterprise website**.

Installing a DIMM

About this task

The server uses memory to perform almost all of its operations. Upgrading the server memory capacity leads to faster boot-up, processing period, and timely responses to promote optimum system performance.

Procedure

1. Power down the server.
2. Disconnect the power cord from the AC source, and then from the server.
3. Disconnect all peripheral cables from the server.
4. Remove the chassis cover.
5. Install the DIMM.
6. Install the chassis cover.
7. Connect all peripheral cables to the server.
8. Connect the power cord to the server power jack, and then to the AC source.

9. Power up the server.

.0. To configure the memory, use the Aptio Setup Utility. Select **Chipset > South Bridge > Memory Configuration**.

Subtopics

Install the DIMM

Install the DIMM

Procedure

1. Open the DIMM slot latches.
2. Align the notch on the bottom edge of the DIMM with the keyed surface of the DIMM slot, and then fully press the DIMM into the slot until the latches snap back into place.

   The DIMM slots are structured to ensure proper installation. If you try to insert a DIMM but it does not fit easily into the slot, you might have positioned it incorrectly. Reverse the orientation of the DIMM and insert it again.

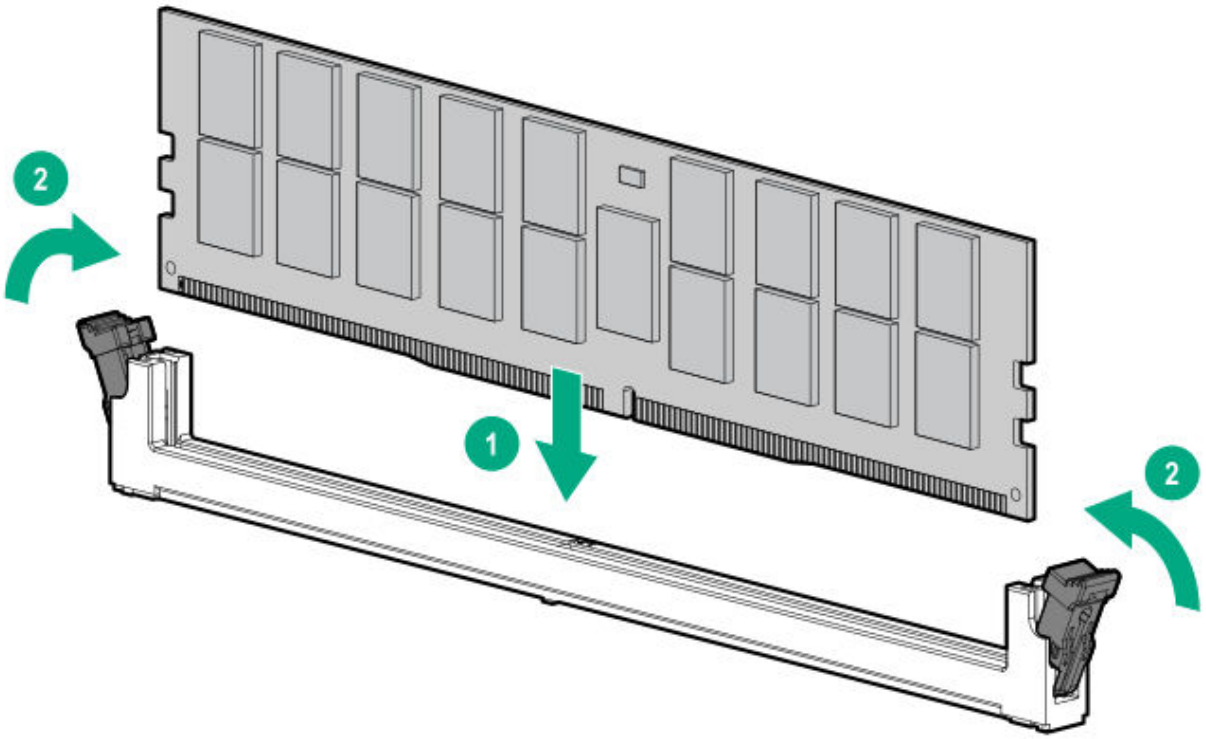

Storage controller options

The server supports the following storage controllers:

- The embedded Marvell 88SE9230 PCIe to SATA 6Gb/s Controller supports SATA drives connected to the onboard LFF/SFF drive SATA port. RAID 0, 1, and 10 levels are supported.

  To configure drives connected to the onboard LFF/SFF drive SATA port, use the Marvell BIOS Utility or the Marvell Storage Utility.

- The server supports HPE Smart Array Gen10 type-p SR controller options. Use this option for SAS/SATA drive and advanced RAID support.

  To configure drives connected to a Smart Array controller option, use the Smart Storage Administrator.

Subtopics

Installing a Smart Array storage controller

Installing a Smart Array storage controller

Prerequisites

Before you perform this procedure, perform the following steps:

1. Back up data on the system.
2. Close all applications.
3. Update the server firmware if it is not the latest version.
4. Do one of the following:
   - If the new Smart Array is the new boot device, install the device drivers.
   - If the new Smart Array is not the new boot device, go to the next step.
5. Ensure that users are logged off and that all tasks are completed on the server.

CAUTION

In systems that use external data storage, be sure that the server is the first unit to be powered down and the last to be powered back up. Taking this precaution ensures that the system does not erroneously mark the drives as failed when the server is powered up.

Procedure

1. Power down the server.
2. Disconnect the power cord from the AC source, and then from the server.
3. Disconnect all peripheral cables from the server.
4. Remove the chassis cover.
5. Remove the system board assembly.
6. If the storage controller is shipped with an air baffle attached, remove this baffle from the board.
7. If the storage controller is shipped with a full-height bracket attached, replace it with a low-profile one.
8. Install the storage controller.
9. Install the system board assembly
10. Connect all necessary internal cabling to the storage controller.

    For more information on these cabling requirements, see the documentation that ships with the option.
11. Install the chassis cover.
12. Connect all necessary external cabling to the storage controller.

    For more information on these cabling requirements, see the documentation that ships with the option.
13. Connect all peripheral cables to the server.
14. Connect the power cord to the server power jack, and then to the AC source.
15. Power up the server.
16. Update the drive firmware if it is not the latest version.
17. Use the Smart Storage Administrator to create arrays and logical drives.

Results

The installation is complete.

Expansion board options

The server has two low-profile, open-ended PCIe3 expansion slots. Use these slots to install additional hardware capabilities such as:

- A storage controller board to enable advanced drive features.
- A network adapter with advanced Ethernet connectivity features.

Subtopics

Installing an expansion board

Installing an expansion board

Procedure

1. Power down the server.
2. Disconnect the power cord from the AC source, and then from the server.
3. Disconnect all peripheral cables from the server.
4. Remove the chassis cover.
5. Remove the system board assembly.
6. If the expansion board is shipped with an air baffle attached, remove this baffle from the board.
7. If the expansion board is shipped with a full-height bracket attached, replace it with a low-profile one.
8. Install the expansion board.
9. Install the system board assembly
10. Connect all necessary internal cabling to the expansion board.

    For more information on these cabling requirements, see the documentation that ships with the option.
11. Install the chassis cover.
12. Connect all necessary external cabling to the expansion board.

    For more information on these cabling requirements, see the documentation that ships with the option.
13. Connect all peripheral cables to the server.
14. Connect the power cord to the server power jack, and then to the AC source.
15. Power up the server.

Subtopics

Remove the air baffle from an expansion card

Install a low-profile bracket on an expansion card
Install the expansion board

Remove the air baffle from an expansion card

Procedure

Remove the air baffle from an expansion card.

The number and location of the latches that secure the baffle to the card will vary depending on the expansion card. The illustration below is only an example image. See the expansion card documentation for model-specific information.

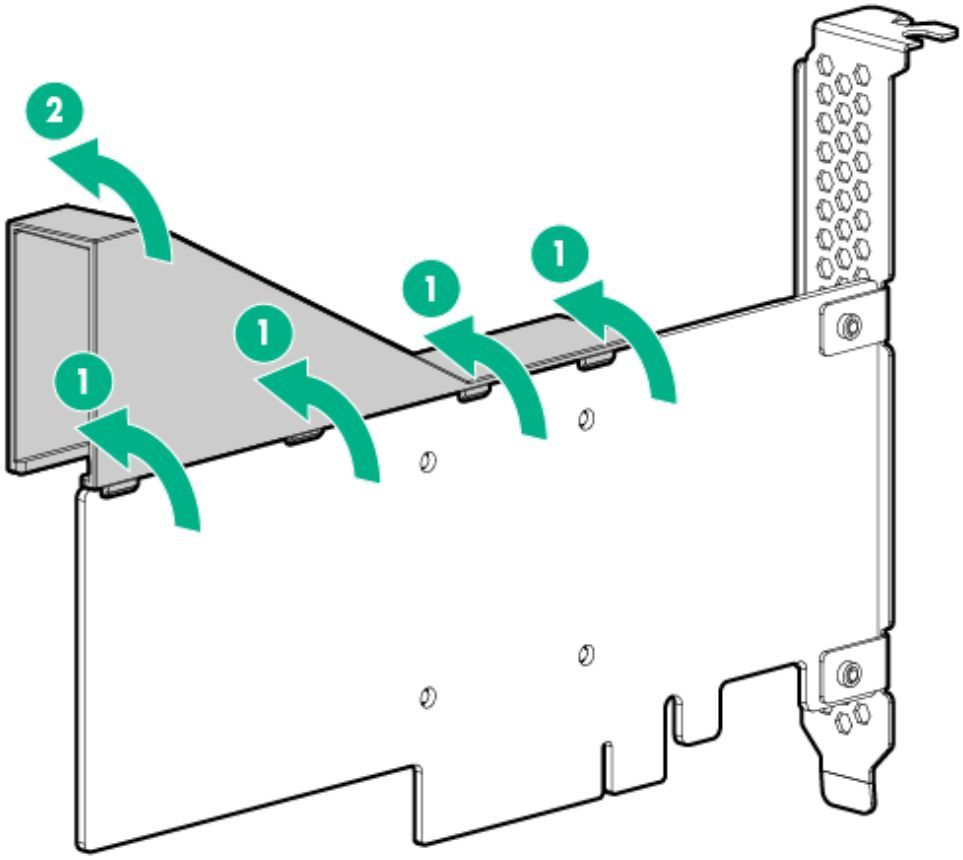

Install a low-profile bracket on an expansion card

About this task

The number and location of the bracket screws will vary depending on the expansion card. The illustrations below are only example images. See the expansion card documentation for model-specific information.

Procedure

1. Remove the full-height bracket from the expansion card.

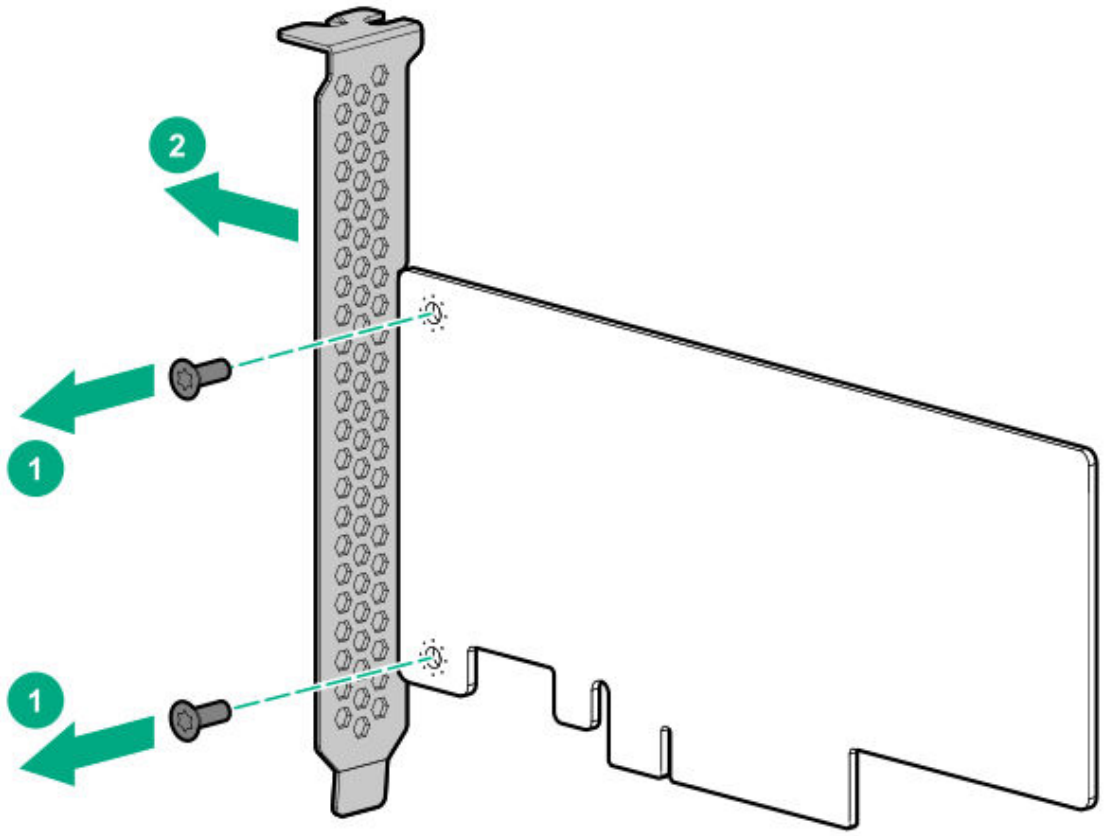

2. Install the low-profile bracket on the expansion card.

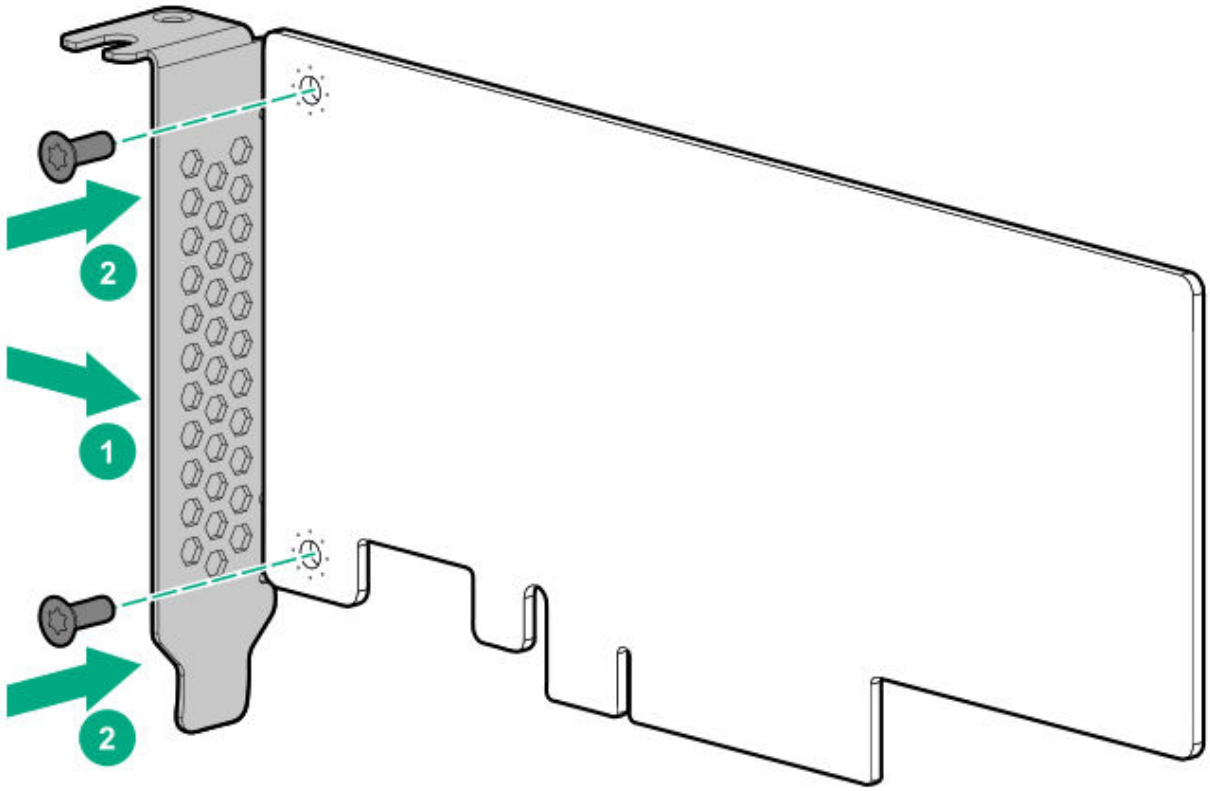

Install the expansion board

Prerequisites

Before you perform this procedure, make sure that you have T-15 Torx screwdriver available.

Procedure

1. Identify the expansion slot compatible with the expansion board, and then remove the blank opposite that slot.

   Retain the blank for future use.

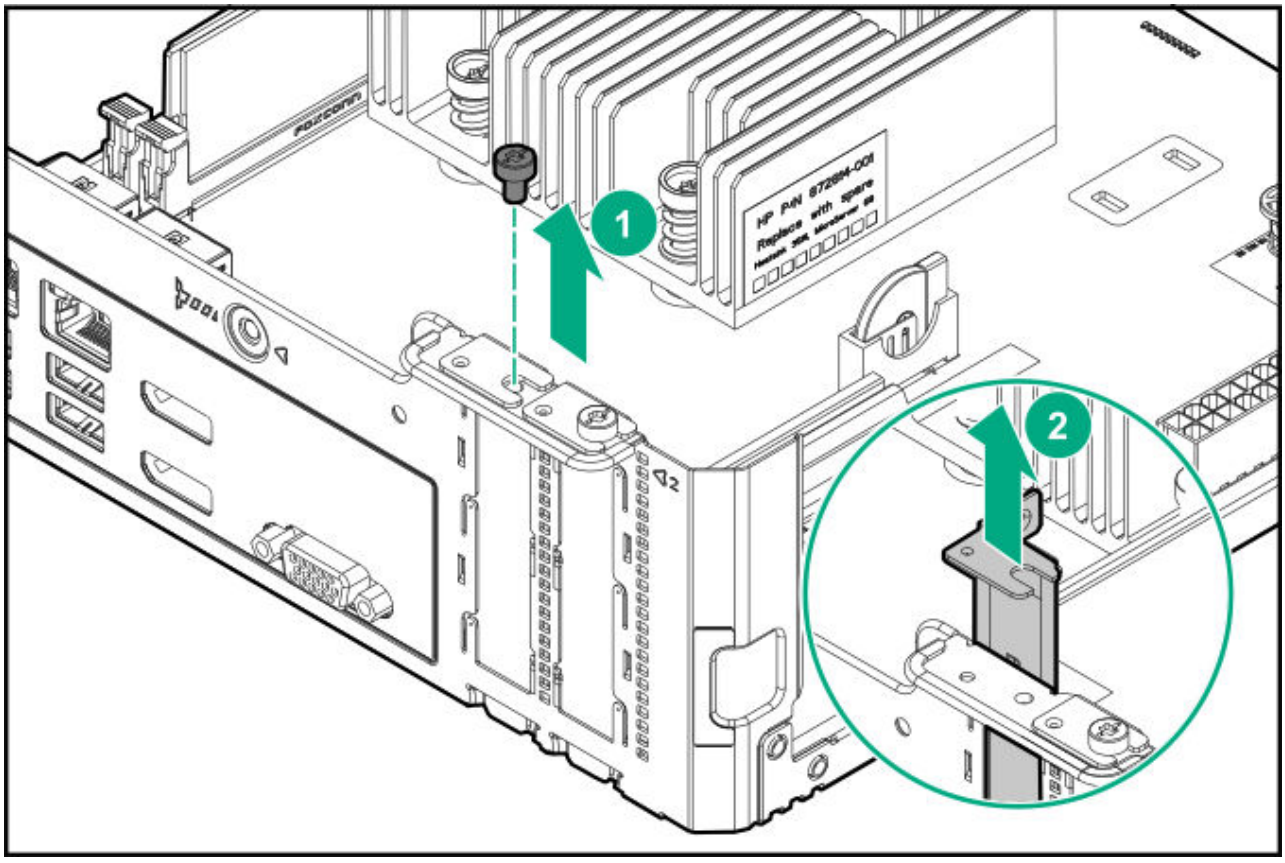

2. Verify that any switches or jumpers on the expansion board are set properly.

   For more information, see the expansion board documentation.

3. Install the expansion board. Verify that the board is firmly seated in the slot.

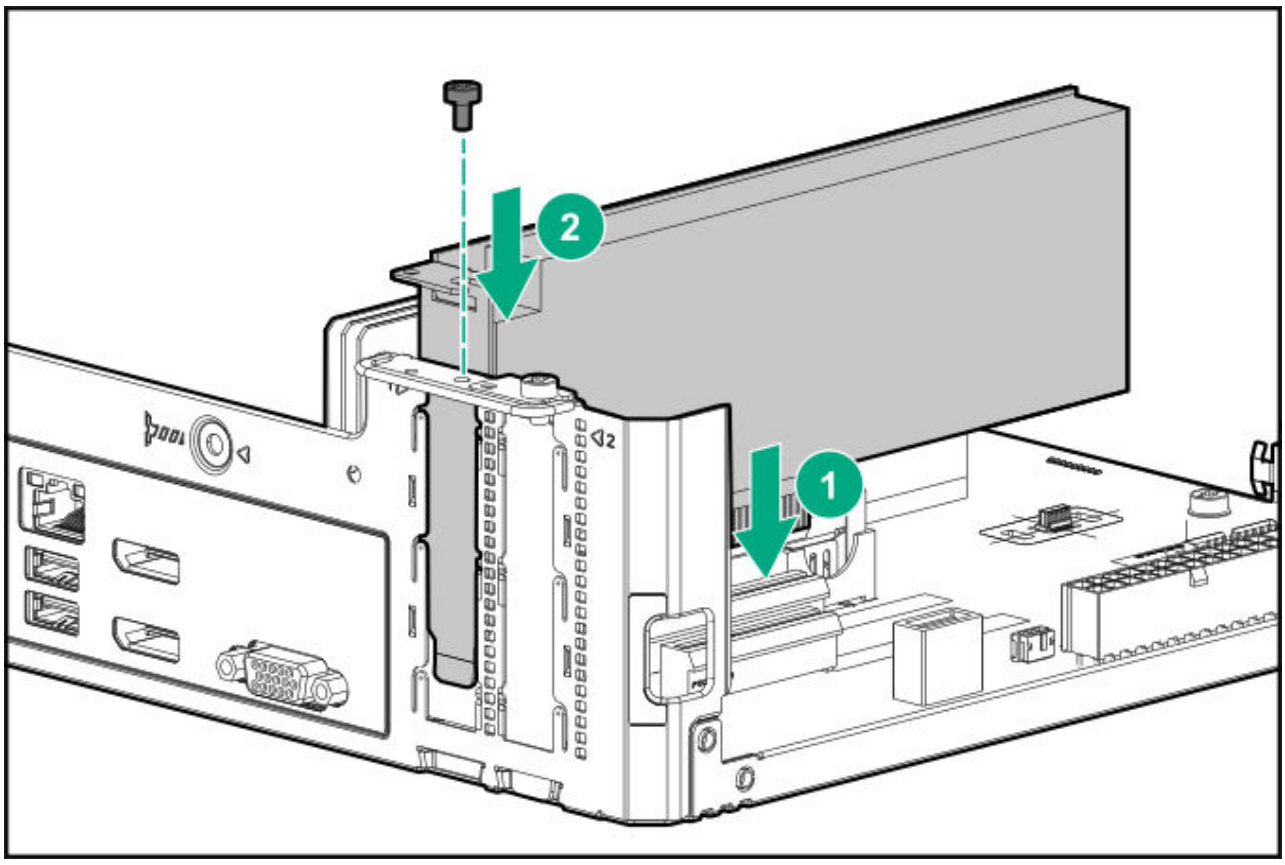

Internal USB device options

The server has an internal USB 2.0 port that you can use to install an internal USB flash media device for:

- booting up from flash solution
- data backup/redundancy

Subtopics

Install an internal USB device

Install an internal USB device

Procedure

1. Power down the server.

2. Disconnect the power cord from the AC source, and then from the server.
3. Disconnect all peripheral cables from the server.
4. Remove the chassis cover.
5. Plug in the USB device into the internal USB port.

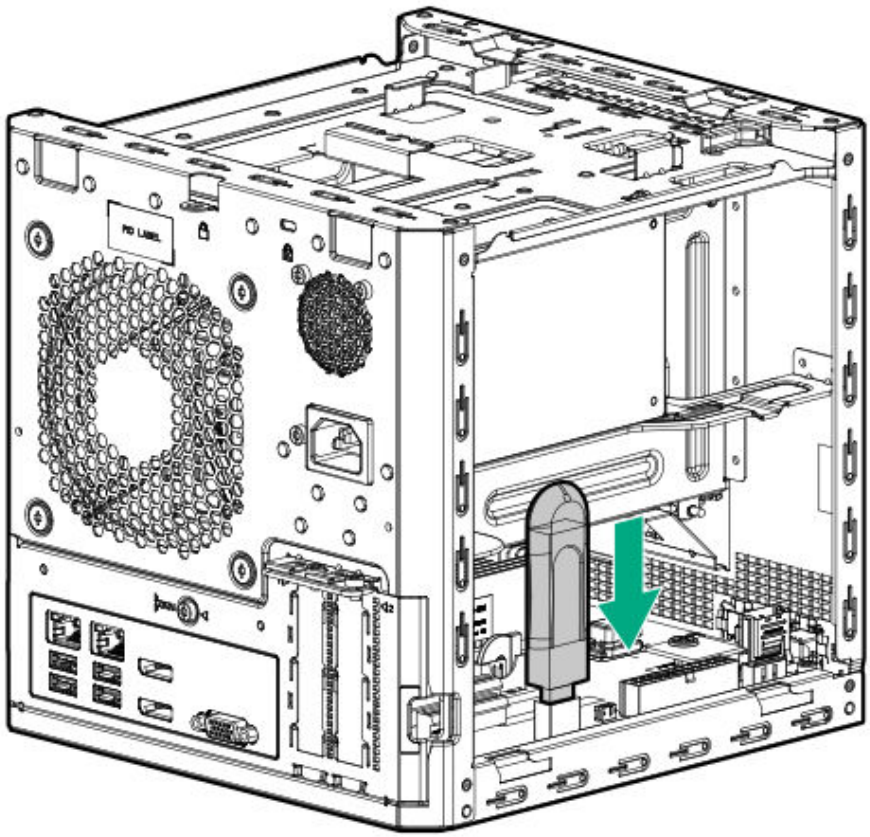

6. Install the chassis cover.
7. Connect all peripheral cables to the server.
8. Connect the power cord to the server power jack, and then to the AC source.
9. Power up the server.

Results

For more information on any required setup or configuration procedure, see the USB device documentation.

External HPE RDX Backup System option

To install a simple, inexpensive, and reliable way to securely store your data backups, install an external HPE RDX Backup System. The backup system is a removable, ruggedized, hard disk drive system.

The backup system consists of two components:

- RDX cartridge
- RDX docking station

Hewlett Packard Enterprise recommends that no more than one HPE RDX Removable Disk Backup System be connected to a system at a time.

For more information on installing and configuring the external HPE RDX Removable Disk Backup System, see the RDX product documentation:

https://www.hpe.com/info/rdx

Trusted Platform Module

The TPM is a hardware-based system security feature that can securely store information, such as passwords and encryption keys, which can be used to authenticate the platform.

The TPM works with Microsoft Windows BitLocker which is a data protection feature available in Microsoft Windows Server 2008 R2 SP1 and later operating systems. BitLocker helps protect user data and helps ensure that a server running Windows Server has not been tampered with while the system was offline.

This server supports TPM 2.0. To prevent possible damage to the TPM or to the system board, the TPM cannot be removed from the board once it has been installed.

Subtopics

Trusted Platform Module (TPM) — China Import Restrictions
Trusted Platform Module guidelines
Installing the Trusted Platform Module overview
Installing the Trusted Platform Module board
Retaining the recovery key/password
Enabling the Trusted Platform Module

Trusted Platform Module (TPM) — China Import Restrictions

HPE Special Reminder: Before enabling TPM functionality on this system, you must ensure that your intended use of TPM complies with relevant local laws, regulations and policies, and approvals or licenses must be obtained if applicable.

For any compliance issues arising from your operation/usage of the TPM which violates the above mentioned requirement, you shall bear all the liabilities wholly and solely. HPE will not be responsible for any related liabilities.

可信任平台模块 (Trusted Platform Module，TPM) 声明

HPE 特别提醒：在您在系统中启用 TPM 功能前，请您务必确认，您将要对 TPM 的使用遵守相关的当地法律、法规及政策，并已获得所需的一切事先批准及许可(如适用)。

若因您未获得相应的操作/使用许可而发生的合规问题，皆由您自行承担全部责任，与 HPE 无涉。

Trusted Platform Module guidelines

> **CAUTION**
> Always observe the guidelines in this document. Failure to follow these guidelines can cause hardware damage or halt data access.

When installing or replacing a TPM, observe the following guidelines:

- Do not remove an installed TPM. Once installed, the TPM becomes a permanent part of the system board.
- When installing or replacing hardware, Hewlett Packard Enterprise service providers cannot enable the TPM or the encryption technology. For security reasons, only the customer can enable these features.
- When returning a system board for service replacement, do not remove the TPM from the system board. When requested, HPE Service provides a TPM with the spare system board.
- Any attempt to remove an installed TPM from the system board breaks or disfigures the TPM security rivet. Upon locating a broken or disfigured rivet on an installed TPM, administrators should consider the system compromised and take appropriate measures to ensure the integrity of the system data.
- When using BitLocker, always retain the recovery key/password. The recovery key/password is required to enter Recovery Mode after BitLocker detects a possible compromise of system integrity.
- HPE is not liable for blocked data access caused by improper TPM use. For operating instructions, see the encryption technology feature documentation provided by the operating system.

Installing the Trusted Platform Module overview

Procedure

1. Installing the Trusted Platform Module board.
2. Retain the recovery key/password.
3. Enabling the Trusted Platform Module.

Installing the Trusted Platform Module board

Procedure

1. Power down the server.
2. Disconnect the power cord from the AC source, and then from the server
3. Disconnect all peripheral cables from the server.
4. Remove the chassis cover.
5. Remove the system board assembly.
6. Install the Trusted Platform Module board.
7. Install the system board assembly.
8. Install the chassis cover.
9. Connect all peripheral cables to the server.
10. Connect the power cord to the server power jack, and then to the AC source.
11. Power up the server.

Subtopics

Install the Trusted Platform Module board

Install the Trusted Platform Module board

Procedure

1. Locate the TPM connector on the system board.
2. Install the TPM board.

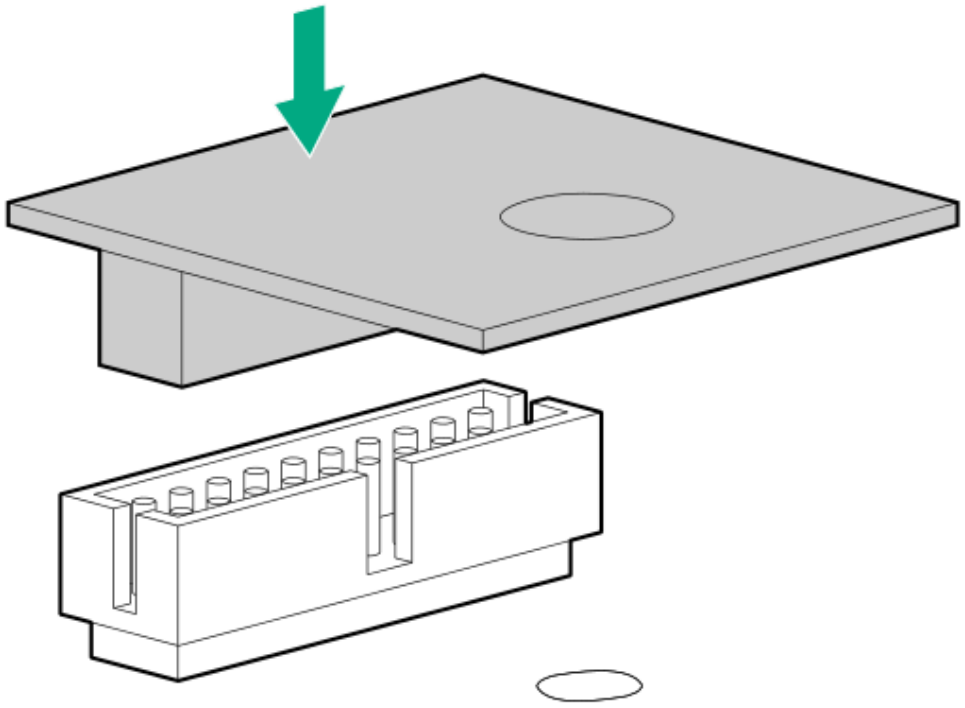

3. Install the TPM security rivet by pressing the rivet firmly into the system board.

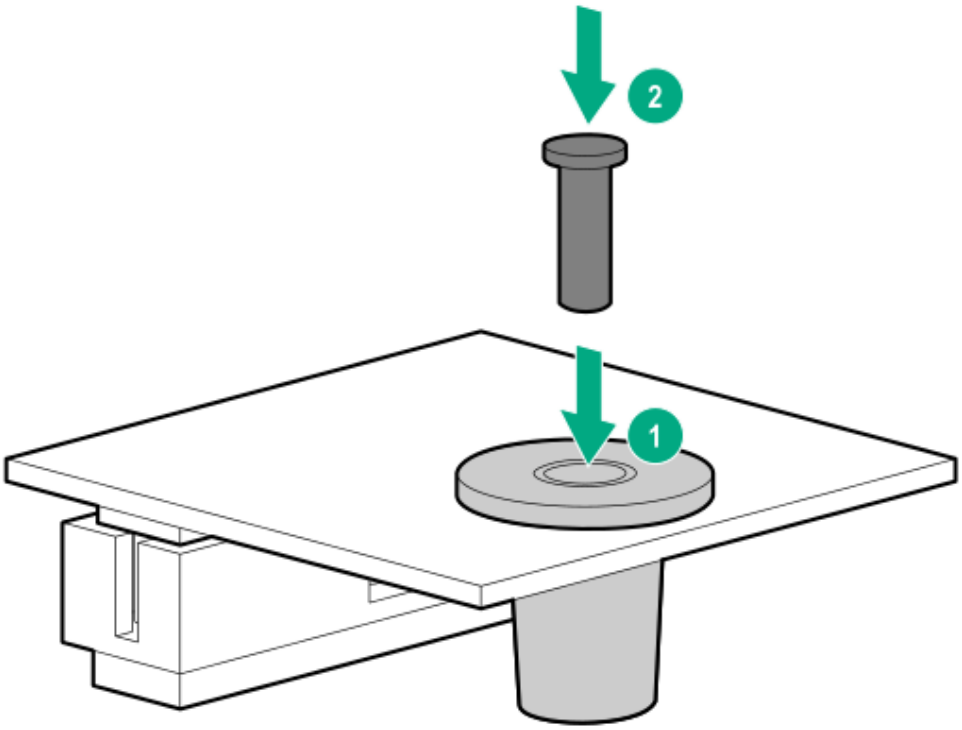

Retaining the recovery key/password

About this task

The recovery key/password is generated during BitLocker setup, and can be saved and printed after BitLocker is enabled. When using BitLocker, always retain the recovery key/password. The recovery key/password is required to enter Recovery Mode after BitLocker detects a possible compromise of system integrity.

To help ensure maximum security, observe the guidelines listed in the following procedure list when retaining the recovery key/password.

Procedure

- Always store the recovery key/password in multiple locations.
- Always store copies of the recovery key/password away from the blade.
- Do not save the recovery key/password on the encrypted hard drive.

Enabling the Trusted Platform Module

Procedure

1. To access the Aptio Setup Utility, on the enter setup prompt, press the **F2** or **Del** key.
2. Select **Advanced > Trusted Computing**, and then press the **Enter** key.
3. Verify that the TPM device name is displayed.
4. To exit the utility, press the **Esc** key.

   The server reboots without user input. During this system reboot, the TPM is enabled.
5. Enable TPM functionality in the OS, such as Microsoft Windows BitLocker or measured boot.

   > **CAUTION**
   >
   > When a TPM is installed and enabled on the server, data access is locked if you fail to follow the proper procedures for updating the system or option firmware, replacing the system board, replacing a hard drive, or modifying OS application TPM settings.

   For more information on adjusting TPM usage in BitLocker, see the Microsoft website:

   https://technet.microsoft.com/en-us/library/cc732774.aspx

Cabling

Subtopics

Cabling overview
Four-bay non-hot-plug drive cabling
SSD cabling
Optical drive cabling
Fan cabling
Power supply cabling

Cabling overview

This section provides guidelines that help you make informed decisions about cabling the server and hardware options to optimize performance.

> **CAUTION**
>
> When routing cables, always be sure that the cables are not in a position where they can be pinched or crimped.

Four-bay non-hot-plug drive cabling

The four-bay non-hot-plug drive cable assembly consists of the drive power and SATA cables attached to a bracket. If either the drive power or SATA cable becomes defective, the entire cable assembly will need to be replaced.

- LFF/SFF drive SATA cable connected to the system board

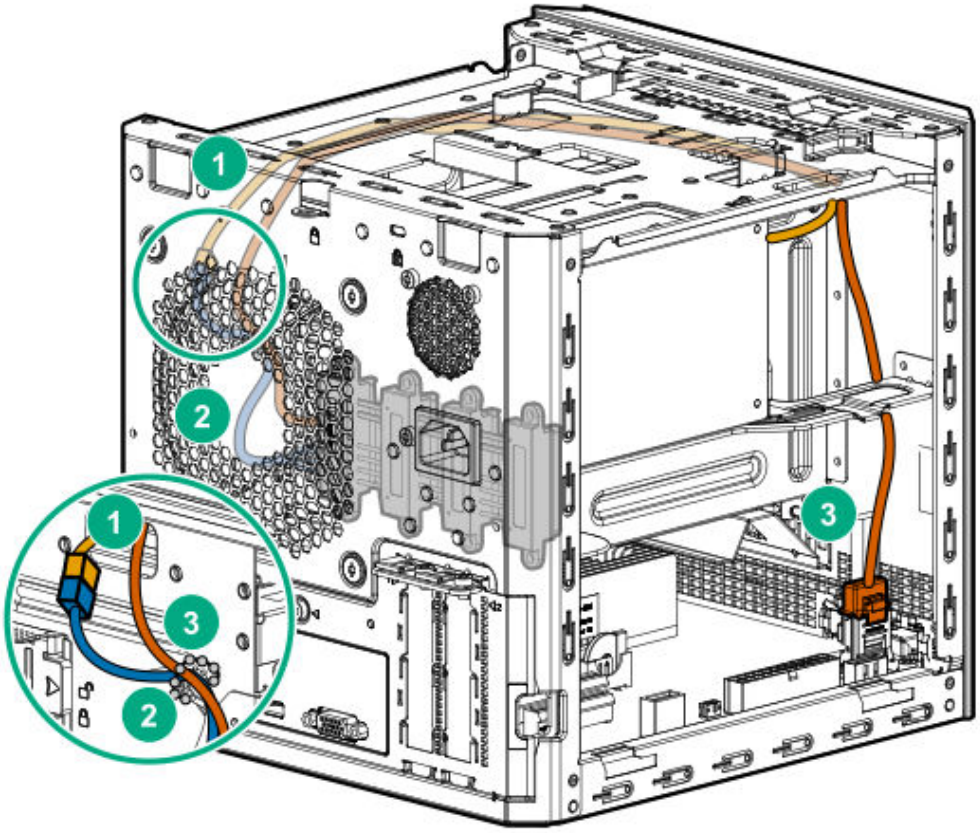

Item	Description
1	P2 power supply cable
2	LFF/SFF drive power cable
3	LFF/SFF drive SATA cable

- LFF/SFF drive SATA cable connected to a Smart Array storage controller board

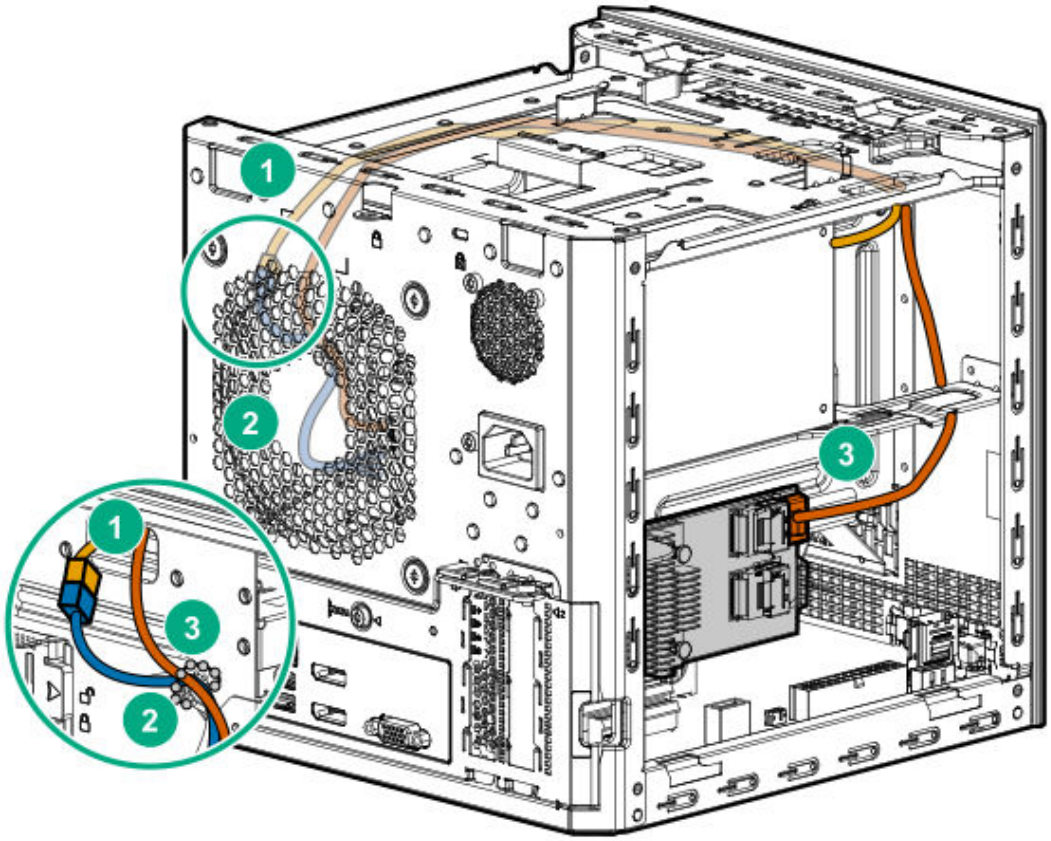

Item	Description
1	P2 power supply cable
2	LFF/SFF drive power cable
3	LFF/SFF drive SATA cable

SSD cabling

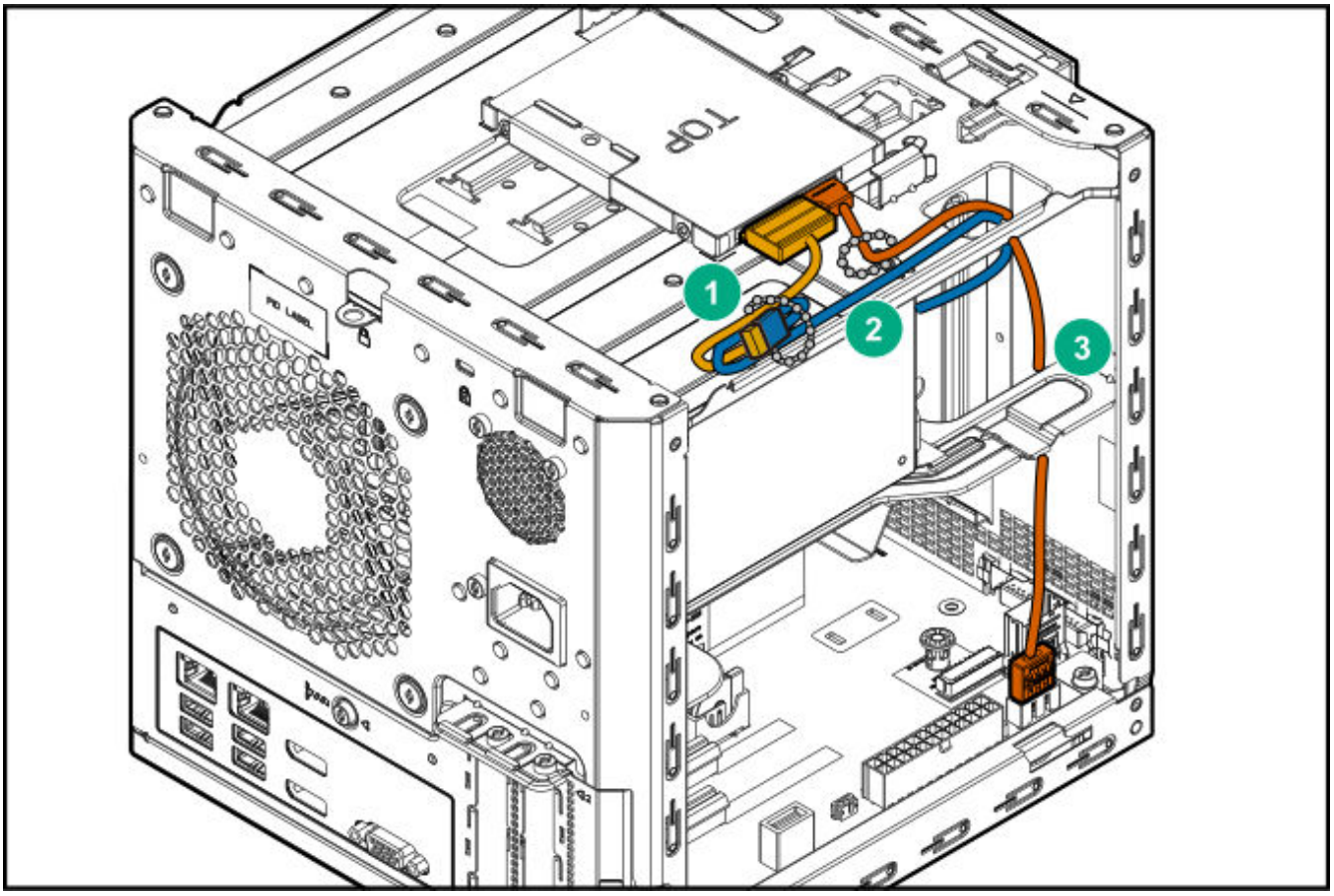

Item	Description
1	SSD power cable
2	P3 power supply cable
3	SSD SATA cable

Optical drive cabling

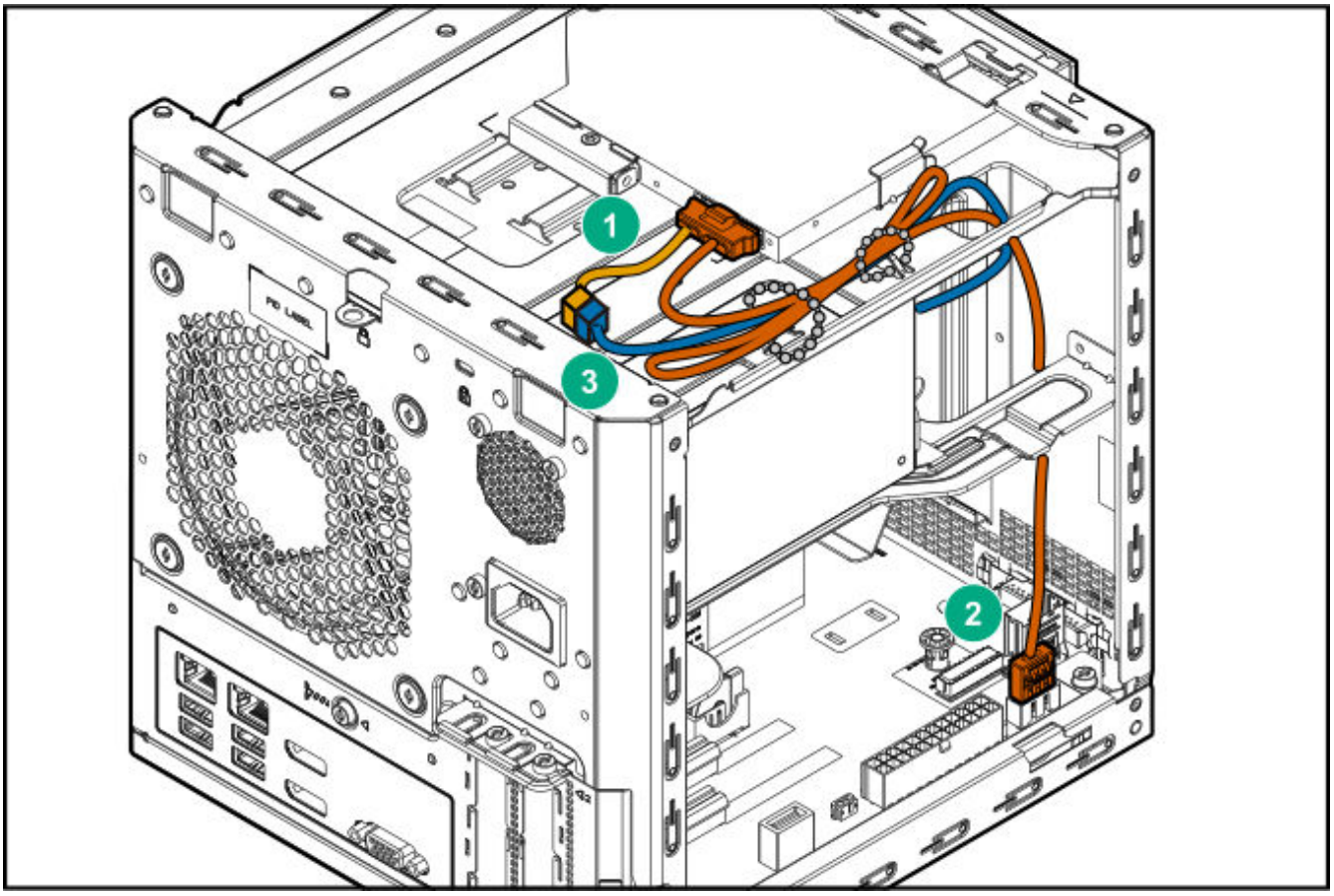

Item	Description
1	Optical drive power cable
2	Optical drive SATA cable
3	P3 power supply cable

Fan cabling

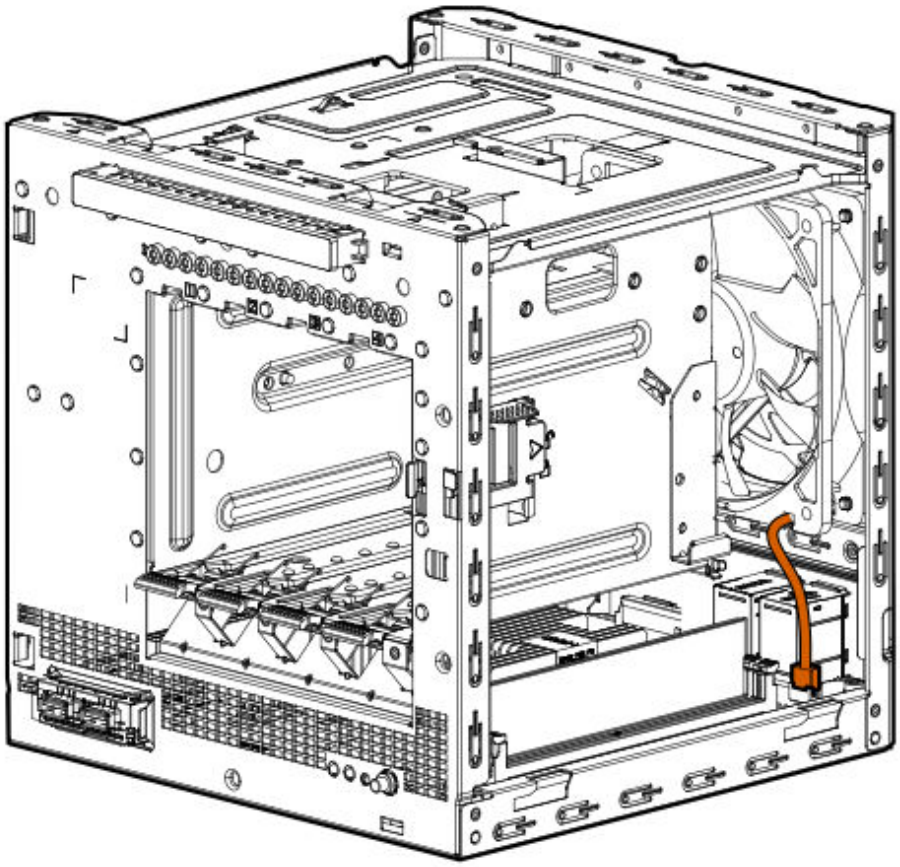

Power supply cabling

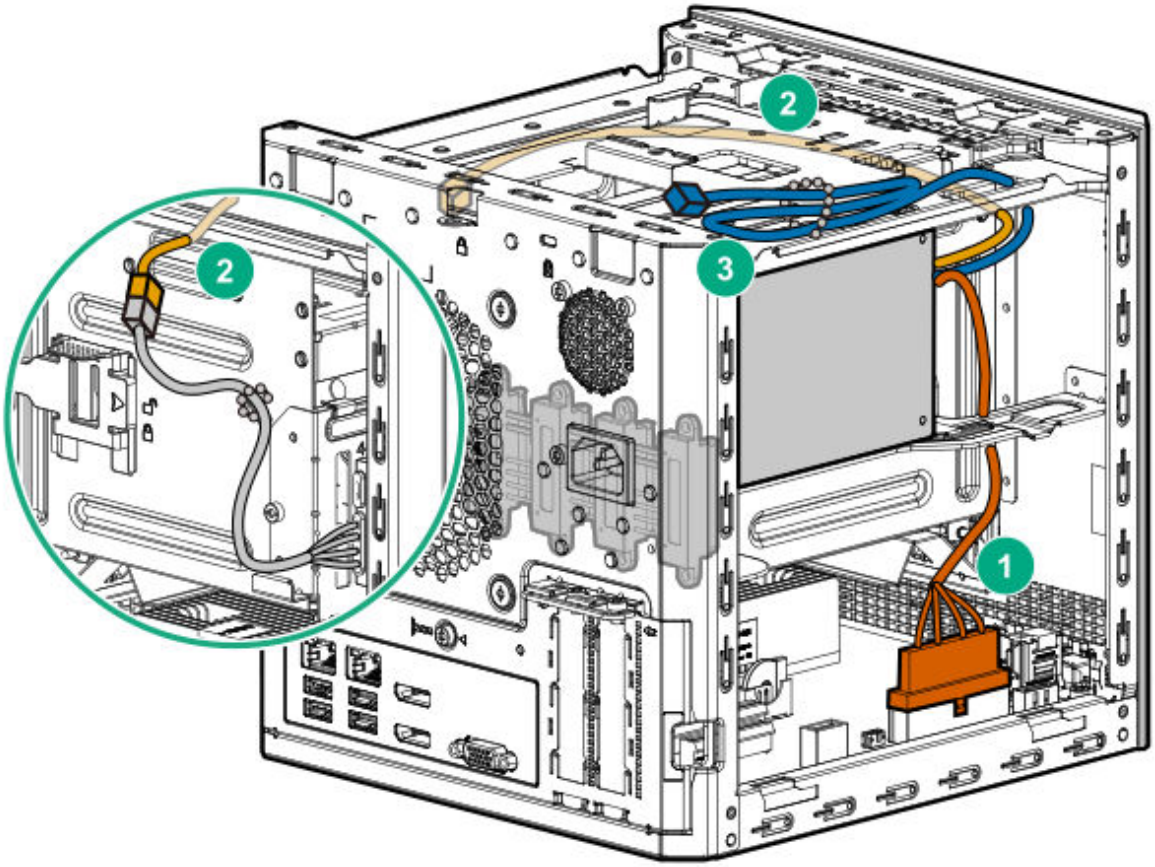

Item	PSU cable marker	Description
1	P1	System board power cable
2	P2	LFF/SFF drive power cable
3	P3	Optical drive/SSD power cable

Software and configuration utilities

Subtopics

Server mode
Product QuickSpecs
Aptio Setup Utility
Marvell BIOS Utility

Marvell Storage Utility
Smart Storage Administrator
USB support
Keeping the system current

Server mode

Software or configuration utility	Server mode
Aptio Setup Utility	Offline
Smart Storage Administrator	Online
Marvell Storage Utility	Online
Marvell BIOS Utility	Offline

Product QuickSpecs

For more information about product features, specifications, options, configurations, and compatibility, see the product QuickSpecs:
https://www.hpe.com/info/quickspecs

Aptio Setup Utility

The Aptio Setup Utility is embedded in the system ROM. This utility enables you to perform a wide range of configuration activities, including the following:

- Configuring system devices and installed options
- Enabling and disabling system features
- Displaying system information
- Selecting the primary boot controller
- Configuring memory options

Subtopics

Using the Aptio Setup Utility
Boot option control
Restoring and customizing configuration settings
Clearing the BIOS configuration settings
Embedded UEFI Shell
Secure Boot configuration

Using the Aptio Setup Utility

To use the Aptio Setup Utility, use the following keys:

Key	Action
F2 or Del (during POST)	Access the Aptio Setup Utility.
Left and right arrows	Navigate the menus.
Up and down arrows	Navigate menu items.
Enter	Select menu items.
F4	Save selections and exit the utility.
F1	Access help for the highlighted configuration option.
Esc	Exit the utility.

Default configuration settings are applied to the server in either of the following scenarios:

- When the system powers up for the first time
- When the system is restored to the default settings

Default configuration settings are sufficient for typical server operations. However, you can modify the configuration settings as needed. The system prompts you to access the Aptio Setup Utility every time the system is powered up.

Boot option control

This feature enables you:

- To choose the boot mode, select **Advanced > Boot Option.**
- To set the boot option priority, select **Boot > Boot Option Priorities**.
- To select the one time boot option, select **Save & Exit > Boot Override**.

This menu allows you to select the boot device for a specific boot and does not modify the boot order configuration settings.

To select the one time boot option directly during POST, press the **F11** key when prompted during system boot, and then select the preferred boot device.

Subtopics

Boot option
Selecting the boot mode

Boot option

Use this option to set the boot mode for the system. The following boot modes are supported:

- UEFI boot mode — The UEFI boot mode is the default boot mode. It configures the server to boot UEFI-compatible operating systems, and is required to use certain Aptio Setup Utility options.
- Legacy boot mode — This boot mode configures the server to boot traditional operating systems in legacy BIOS-compatibility mode. Certain situations might require that you operate in legacy boot mode, such as booting custom OS images that were installed using legacy boot mode or created using a legacy BIOS system.

Selecting the boot mode

Procedure

1. Reboot the server.
2. To access the Aptio Setup Utility, press the **Del** or **F2** key.
3. Select **Advanced > Boot Option > Boot Mode**.
4. Select a boot mode setting, and then press the **Enter** key.
5. To confirm the change and exit the utility, press the **F4** key.

Restoring and customizing configuration settings

The following options are available for restoring or customizing the configuration settings:

- Reset all configuration settings to the factory default settings.
- Restore and use the system default configuration settings.
- Configure default settings as necessary, and then save the configuration as the user default configuration.
- Restore the user default configuration.

  To restore the user default configuration, select **Save & Exit > Default Option > Restore User Default**.

Clearing the BIOS configuration settings

The server BIOS configuration settings such as the system date and time, boot sequence, and hardware settings are stored in the CMOS. These settings are configured in the Aptio Setup Utility.

You might need to clear the CMOS if any of the following conditions occur:

- POST errors or boot issues
- Corrupted BIOS settings
- Incorrect settings made in the Aptio Setup Utility have caused error messages to be unreadable.
- If there is a hardware compatibility issue of a known compatible component.
- If the power-on password is forgotten.



CAUTION

Be careful when clearing or altering the BIOS settings. Changing some settings might prevent the server from booting up correctly or might result in data loss.

Clearing the CMOS resets the BIOS settings to their factory default state. To clear the CMOS:

- If the Aptio Setup Utility is accessible, use the Restore Defaults option under the Save & Exit menu.
- If the Aptio Setup Utility is not accessible, use the CMOS header.

After clearing the CMOS, use the Aptio Setup Utility to reconfigure the BIOS settings.

Subtopics

Clearing the BIOS settings by using the Aptio Setup Utility

Clearing the BIOS settings by using the Aptio Setup Utility

Procedure

1. Reboot the server.
2. To access the Aptio Setup Utility, on the enter setup prompt, press the **F2** or **Del** key.
3. Select the **Save & Exit** menu.
4. Under **Default Options**, select **Restore Defaults**, and then press the **Enter** key.
5. Select **Yes**.
6. To confirm the change and exit the utility, press the **F4** key.

Clearing the BIOS settings by using the CMOS header

About this task

The arrow shown in the steps 6 and 7 illustrations points to the front of the server.

Procedure

1. Power down the server.
2. Disconnect the power cord from the AC source, and then from the server.
3. Disconnect all peripheral cables from the server.
4. Remove the chassis cover.
5. Remove the system board assembly.
6. Remove the jumper from its default position on pins 2 and 3, and place them on pins 1 and 2.

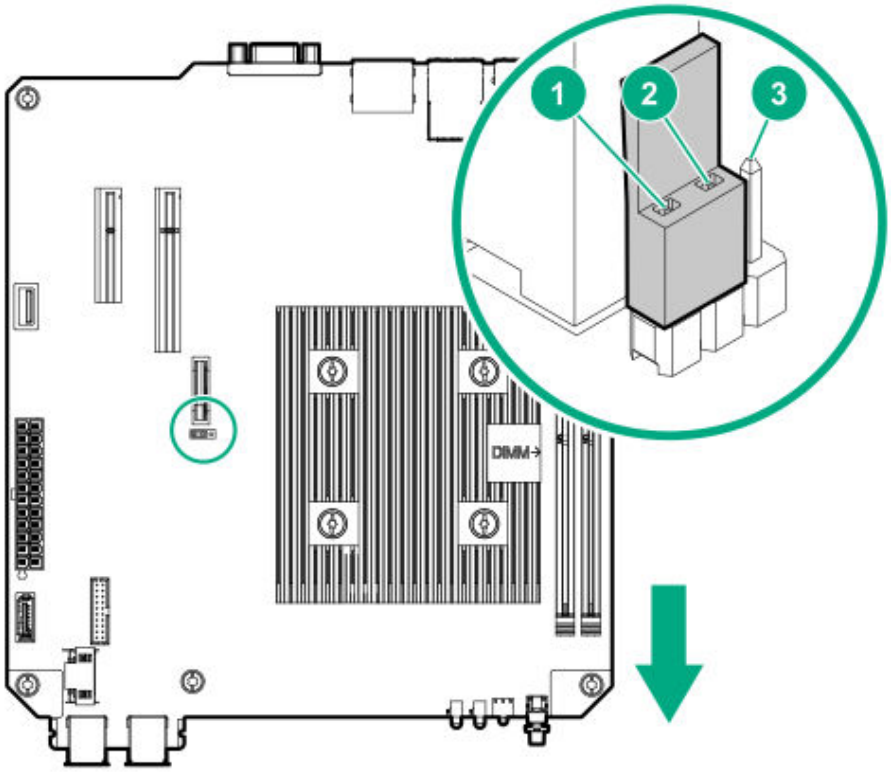

7. After five seconds, remove the jumper from pins 1 and 2, and move it back to the default position on pins 2 and 3.

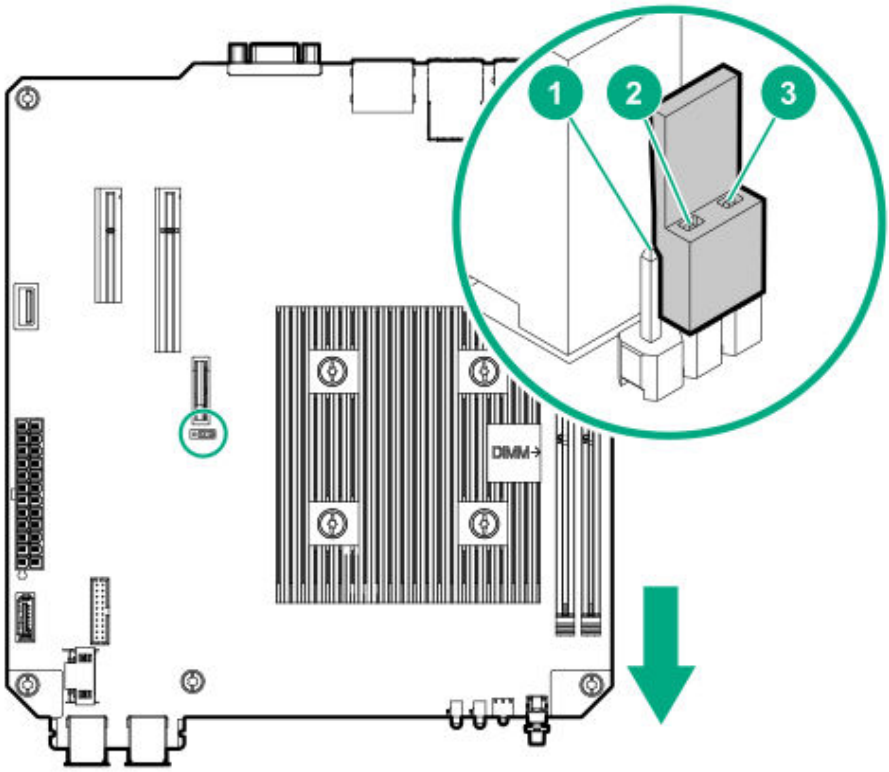

8. Install the system board assembly.
9. Install the chassis cover.
10. Connect all peripheral cables to the server.
11. Connect the power cord to the server power jack, and then to the AC source.
12. Power up the server.

Embedded UEFI Shell

The system BIOS in this server includes an Embedded UEFI Shell in the ROM. The UEFI Shell environment provides an API, a command-line prompt, and a set of CLIs that allow scripting, file manipulation, and system information. These features enhance the capabilities of the Aptio Setup Utility.

For more information, see the UEFI Shell Specification on the UEFI website:

https://www.uefi.org/specifications

Secure Boot configuration

Secure Boot is implemented in the BIOS and does not require special hardware. Secure Boot ensures that each component launched during the boot process is digitally signed. Secure Boot also ensures that the signature is validated against a set of trusted certificates embedded in the UEFI BIOS.

Secure Boot validates the software identity of the following components in the boot process:

- UEFI drivers loaded from PCIe cards
- UEFI drivers loaded from mass storage devices
- Preboot UEFI shell applications
- OS UEFI boot loaders

When Secure Boot is enabled, only firmware components and operating systems with boot loaders that have an appropriate digital signature can be executed during the boot process. Only operating systems that support Secure Boot and have a UEFI boot loader signed with one of the authorized keys can boot.

User can customize the certificates embedded in the UEFI BIOS by adding or removing their own certificates.

Marvell BIOS Utility

The Marvell BIOS Utility (MBU) is built into the ROM of the embedded Marvell 88SE9230 PCIe to SATA 6Gb/s Controller. This Marvell storage controller supports the hardware RAID 0, 1, and 10 levels. Use the MBU to create and manage RAID virtual disks and arrays using the drives connected to the embedded storage controller.

For more information, see the Marvell Storage Controller User Guide for the HPE ProLiant MicroServer Gen10 in the Hewlett Packard Enterprise Support Center website:

https://www.hpe.com/info/microservergen10-docs

Subtopics

Accessing the Marvell BIOS Utility under UEFI boot mode
Accessing the Marvell BIOS Utility under legacy boot mode

Accessing the Marvell BIOS Utility under UEFI boot mode

Prerequisites

Accessing the MBU using the `RAID` command in the UEFI `Shell` prompt requires system BIOS version A330 or later. If needed, update the system BIOS.

About this task

The UEFI boot mode is the server default boot mode.

Procedure

1. Reboot the server.
2. During POST, press the **Delete** key.
3. From the **Aptio Setup Utility** screen, select **Save & Exit tab > UEFI: Built-in EFI Shell**, and then press the **Enter** key.
4. At the `Shell` prompt, type `RAID`, and then press the **Enter** key.

Accessing the Marvell BIOS Utility under legacy boot mode

About this task

The UEFI boot mode is the server default boot mode. To switch to legacy boot mode, see Selecting the boot mode.

Procedure

1. Reboot the server.
2. On the POST drive information screen, press **Ctrl**+**M**.

Marvell Storage Utility

The Marvell Storage Utility (MSU) is a configuration and management utility for the embedded Marvell 88SE9230 PCIe to SATA 6Gb/s Controller. This Marvell storage controller supports hardware RAID 0, 1, and 10 levels. Use the MSU to create and manage RAID virtual disks and arrays using the drives connected to the embedded storage controller.

To enable MSU access through GUI or CLI, install the MSU in the server.

For more information, see the Marvell Storage Controller User Guide for the HPE ProLiant MicroServer Gen10 in the Hewlett Packard Enterprise Support Center website:

https://www.hpe.com/info/microservergen10-docs

Subtopics

Installing the Marvell Storage Utility

Installing the Marvell Storage Utility

Prerequisites

Access to some HPESC downloads might require product entitlement. You must have an HPE Passport set up with relevant entitlements.

Procedure

1. Go to the HPE ProLiant MicroServer Gen10 download page:

   https://www.hpe.com/downloads/microservergen10

2. Under **Software Type** select **Utility**.
3. Download the `Marvell Storage Utility (MSU) for HPE MicroServer Gen10 Server` package compatible with the target server OS.
4. Unzip the package and open the `Marvell_MSU` folder.
5. Follow the installation procedure described in the `instructions.txt` file.

Smart Storage Administrator

SSA is the main tool for configuring arrays on HPE Smart Array SR controllers. It exists in three interface formats: the SSA GUI, the SSA CLI, and SSA Scripting. All formats provide support for configuration tasks. Some of the advanced tasks are available in only one format.

The diagnostic features in SSA are also available in the standalone software Smart Storage Administrator Diagnostics Utility CLI.

During the initial provisioning of the server or compute module, an array is required to be configured before the operating system can be installed. You can configure the array using SSA.

Accessing SSA in the online environment requires an administrator to download the SSA executables and install them. You can run SSA online after launching the host operating system.

> **IMPORTANT**
>
> The offline version of SSA has been discontinued. For more information, see the following customer notice:
>
> **https://support.hpe.com/hpesc/public/docDisplay?docId=a00132048en_us**

For more information, see the following guides:

- SSA GUI:

  https://www.hpe.com/support/SSA-UG

- SSA CLI:

  https://www.hpe.com/support/SSACLI-UG

- SSA scripting:

  https://www.hpe.com/support/STK_Windows_UG_en

USB support

Hewlett Packard Enterprise servers support both USB 2.0 ports and USB 3.0 ports. Both port types support installing all types of USB devices (USB 1.0, USB 2.0, and USB 3.0), but might run at lower speeds in specific situations:

- USB 3.0 capable devices operate at USB 2.0 speeds when installed in a USB 2.0 port.
- In UEFI boot mode, Hewlett Packard Enterprise provides legacy USB support in the preboot environment before the operating system loads for USB 1.0, USB 2.0, and USB 3.0 speeds.
- In legacy boot mode, Hewlett Packard Enterprise provides legacy USB support in the preboot environment before the operating system loads for USB 1.0 and USB 2.0 speeds. USB 3.0 ports can be used with all devices in legacy boot mode but are not available at USB 3.0 speeds in the preboot environment. Standard USB support (USB support from within the operating system) is provided by the OS through the appropriate USB device drivers. Support for USB 3.0 varies by operating system.

The pre-OS behavior of the USB ports is configurable in the Aptio Setup Utility.

Keeping the system current

Subtopics

Firmware
Firmware update
Drivers, firmware, and software updates
Operating System Version Support
Proactive notifications

Firmware

Firmware is a software program that is stored in the system ROM chip on the system board or to an optional controller. Firmware controls the system when it is first powered on and then passes control to the operating system.

The firmware on the system board of the server is called the system ROM or the BIOS. The firmware on another piece of hardware configured in the server is called the option ROM.

Firmware update

Update the firmware (also called "flashing the ROM") as part of regular server maintenance. In addition, check for specific firmware updates in between regular updates to help keep the server performing optimally.

Firmware updates are created for, but are not limited to, the following reasons:

- To provide critical problem fixes that ensure system stability, such as upgrades that might prevent server unresponsiveness and other issues that could put the system at risk.
- To correct product issues, such as ROM or processor functionality.
- To improve system performance or make the system more serviceable.

Server downtime and time spent removing, returning, and ultimately replacing hardware might be avoided by first updating the firmware during the troubleshooting process. Many product issues that result in hardware replacement are preventable or correctable with a firmware update. Hewlett Packard Enterprise recommends checking for a firmware update before sending a part back to Hewlett Packard Enterprise for replacement.

On servers that have add-on options, Hewlett Packard Enterprise recommends checking for firmware upgrades for each installed option whenever an update to the system ROM or to another option is performed. This ensures that the entire system is running the latest updates for each component.

Multiple methods exist to update the system ROM:

- EFI tool under Embedded UEFI Shell
- Online Flash components

  Product entitlement is required to perform updates.

> **CAUTION**
> Any kind of system interruption during the firmware update results in errors that might corrupt the BIOS settings. These errors prevent the server from booting up. To prevent these update errors, observe the following cautions:
>
> - Attach a UPS to the server to provide backup power to the system when updating the firmware.
> - Do not perform a forced shutdown of the server.
> - Do not perform a forced closure of the firmware update tool.

Subtopics

User default settings after BIOS update
Updating the system ROM using the EFI tool from within the Embedded UEFI Shell
Online Flash components

User default settings after BIOS update

When updating the system BIOS from version A320 (or earlier) to version A330 (or later), the following system BIOS settings will revert to their factory default values:

- System time and date
- Drive configuration
- Boot device sequence
- System passwords
- Security setup

Before performing the BIOS update, manually record the user default values for these listed BIOS settings so that they can be restored after completing the BIOS update.

Updating the system ROM using the EFI tool from within the Embedded UEFI Shell

Prerequisites

Access to some updates might require product entitlement when accessed through the Hewlett Packard Enterprise Support Center. You must have an HPE Passport set up with relevant entitlements.

About this task

For systems configured in UEFI boot mode, use the following procedure to update the firmware.

Procedure

1. Access the System ROM Flash component for your server from the Hewlett Packard Enterprise Support Center website (**https://www.hpe.com/support/hpesc**) and save the package in a USB key.
2. Copy the file to a USB device.
3. Attach the USB device to the server.
4. To access the **One-Time Boot Menu** option, when prompted, press the **F11** key.
5. Select **UEFI: Built-in EFI Shell**.
6. To obtain the assigned file system volume for the USB key, enter the `map -r` command at the UEFI Shell prompt.
7. Change to the file system that contains the System ROM Flash Binary file that you downloaded for your server. Enter one of the fsx file systems available, such as `fs0` or `fs1`, and then press the **Enter** key.

   If no other storage devices are mounted on the system, the USB drive is `fs0:` on the UEFI Shell.
8. To change from the current directory to the directory that contains the binary file, enter the `cd` command.
9. To flash the system ROM from the downloaded binary file, enter the `flashbios.nsh` command.
10. Reboot the server.

    To ensure that the firmware update takes effect and for hardware stability to be maintained, system reboot is required.

Online Flash components

Online Flash components provide updated system firmware that can be installed directly on supported operating systems. To download this component, go to the Hewlett Packard Enterprise Support Center website (**https://www.hpe.com/support/hpesc**). Under **Select your HPE product**, enter the product name or number, and then click **Go**. To update the firmware, follow the instructions inside the firmware update package. The firmware update takes effect after rebooting the server.

Drivers, firmware, and software updates

> **IMPORTANT**
> Always perform a backup before installing or updating device drivers.

- For the latest option ROM and driver updates for Hewlett Packard Enterprise hardware options, download the individual drivers, firmware, and components from the Hewlett Packard Enterprise Support Center website (**https://www.hpe.com/support/hpesc**). Under **Select your HPE product**, enter the product name or number, and then click **Go**.
- For the latest system ROM and other systems software components, download the individual drivers, firmware, and components from the server download page on the Hewlett Packard Enterprise website:

  https://www.hpe.com/downloads/microservergen10

Operating System Version Support

For information about specific versions of a supported operating system, refer to the **operating system support matrix**.

Proactive notifications

30 to 60 days in advance, Hewlett Packard Enterprise sends notifications to subscribed customers on upcoming:

- Hardware, firmware, and software changes

- Bulletins
- Patches
- Security alerts

You can subscribe to proactive notifications on the **https://www.hpe.com/support/hpesc**.

Troubleshooting

Subtopics

Troubleshooting resources

Troubleshooting resources

Use the following resources for troubleshooting the system:

- For information on resolving common problems, comprehensive courses of action for fault isolation and identification, issue resolution, and software maintenance, see the HPE ProLiant MicroServer Gen10 Troubleshooting Guide at:

  https://www.hpe.com/info/gen10-troubleshooting

- For information on the latest server download options, issue resolutions, user documentation, and product advisories, see the HPE ProLiant MicroServer Gen10 support page at:

  https://www.hpe.com/support/microservergen10

System battery replacement

Subtopics

System battery information
Replacing a system battery

System battery information

The server contains an internal lithium manganese dioxide, a vanadium pentoxide, or an alkaline battery that provides power to the real-time clock.

WARNING

If this battery is not properly handled, a risk of fire or burning exists. To reduce the risk of personal injury:

- Do not attempt to recharge the battery.
- Do not expose the battery to temperatures higher than 60°C (140°F).
- Do not expose the battery to low air pressure as it might lead to explosion or leakage of flammable liquid or gas.
- Do not disassemble, crush, puncture, short external contacts, or dispose of the battery in fire or water.

Replacing a system battery

Procedure

1. Power down the server.
2. Disconnect the power cord from the AC source, and then from the server.
3. Disconnect all peripheral cables from the server.
4. Remove the chassis cover.
5. Remove the system board assembly.
6. Replace the system battery.
7. Install the system board assembly.
8. Install the chassis cover.
9. Connect all peripheral cables to the server.
10. Connect the power cord to the server power jack, and then to the AC source.
11. Power up the server.

Subtopics

Replace the system battery

Replace the system battery

Procedure

1. Locate the battery on the system board.
2. Slightly push the metal tab, and then remove the system battery from its socket.

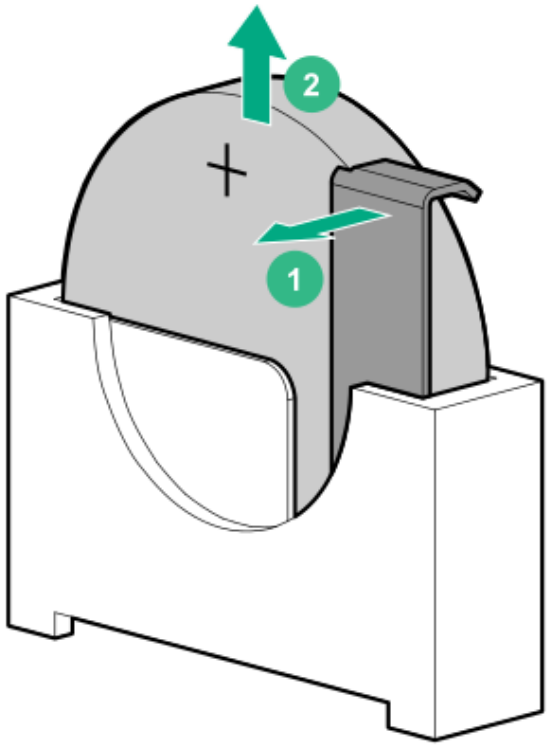

3. Slightly push the metal lab, and then install the new system battery in the socket.

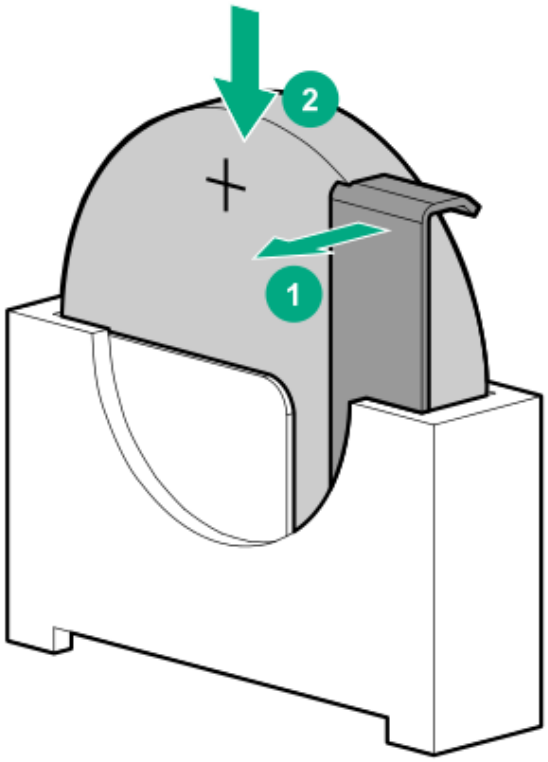

Results

For more information about battery replacement or proper disposal, contact an authorized reseller or an authorized service provider.

Safety, warranty, and regulatory information

Subtopics

Regulatory information
Warranty information

Regulatory information

To view the regulatory information for your product, view the Safety and Compliance Information for Server, Storage, Power, Networking, and Rack Products, available at the Hewlett Packard Enterprise Support Center:

https://www.hpe.com/support/Safety-Compliance-EnterpriseProducts

Additional regulatory information

Hewlett Packard Enterprise is committed to providing our customers with information about the chemical substances in our products as needed to comply with legal requirements such as REACH (Regulation EC No 1907/2006 of the European Parliament and the Council). A chemical information report for this product can be found at:

https://www.hpe.com/info/reach

For Hewlett Packard Enterprise product environmental and safety information and compliance data, including RoHS and REACH, see:

https://www.hpe.com/info/ecodata

For Hewlett Packard Enterprise environmental information, including company programs, product recycling, and energy efficiency, see:

https://www.hpe.com/info/environment

Subtopics

Notices for Eurasian Economic Union
Turkey RoHS material content declaration
Ukraine RoHS material content declaration

Notices for Eurasian Economic Union

Manufacturer and Local Representative Information

Manufacturer information:

Hewlett Packard Enterprise Company, 1701 E Mossy Oaks Road, Spring, TX 77389 U.S.

Local representative information Russian:

- **Russia**
  ООО "Хьюлетт Паккард Энтерпрайз", Российская Федерация, 125171, г. Москва, Ленинградское шоссе, 16А, стр.3, Телефон: +7 499 403 4248 Факс: +7 499 403 4677
- **Kazakhstan**
  ТОО «Хьюлетт-Паккард (К)», Республика Казахстан, 050040, г. Алматы, Бостандыкский район, проспект Аль-Фараби, 77/7, Телефон/факс: + 7 727 355 35 50

Local representative information Kazakh:

- **Russia**
  ЖШС "Хьюлетт Паккард Энтерпрайз", Ресей Федерациясы, 125171, Мәскеу, Ленинград тас жолы, 16A блок 3, Телефон: +7 499 403 4248 Факс: +7 499 403 4677

- **Kazakhstan**
  ЖШС «Хьюлетт-Паккард (К)», Қазақстан Республикасы, 050040, Алматы к., Бостандық ауданы, Әл-Фараби даңғ ылы, 77/7, Телефон/факс: +7 727 355 35 50

Manufacturing date:

The manufacturing date is defined by the serial number.

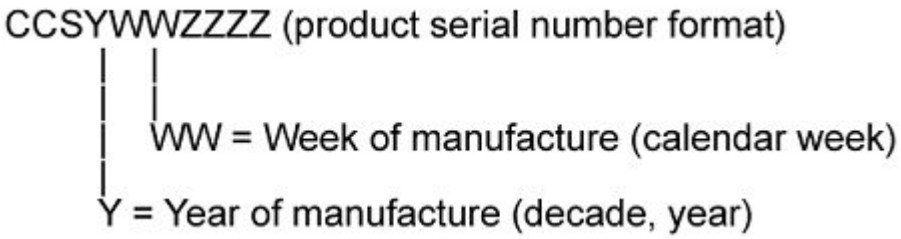

If you need help identifying the manufacturing date, contact **tre@hpe.com**.

Turkey RoHS material content declaration

Türkiye Cumhuriyeti: AEEE Yönetmeliğine Uygundur

Ukraine RoHS material content declaration

Обладнання відповідає вимогам Технічного регламенту щодо обмеження використання деяких небезпечних речовин в електричному та електронному обладнанні, затвердженого постановою Кабінету Міністрів України від 3 грудня 2008 № 1057

Warranty information

To view the warranty information for your product, see the **warranty check tool**.

Specifications

Subtopics

Environmental specifications
Server specifications
Power supply specifications

Environmental specifications

Specification	Value
Temperature range [1]	—
Operating [2]	10°C to 35°C (50°F to 95°F)
Nonoperating	-30°C to 60°C (-22°F to 140°F)
Relative humidity (noncondensing)	—
Operating	10% to 90% 28°C (82.4°F) maximum web bulb temperature (non condensing) across the operating temperature range of 0°C to 40°C.
Nonoperating	5% to 95% 38.7°C (101.7°F), maximum wet bulb temperature

[1] All temperature ratings shown are for sea level. An altitude derating of 1.0°C per 304.8 m (1.8°F per 1000 ft) to 3048 m (10,000 ft) is applicable. No direct sunlight allowed. Maximum rate of change is 20°C per hour (36°F per hour). The upper limit and rate of change might be limited by the type and number of options installed.

[2] System performance during standard operation might degrade if there is a fan fault or if the internal server temperature is above 30°C (86°F).

Server specifications

Dimension	Value
Height	23.50 cm (9.25 in)
Depth	25.40 cm (10.00 in)
Width	23.00 cm (9.06 in)
Weight (approximate values)	
Minimum (one drive and one DIMM installed, no media drive or expansion board installed)	6.495 kg (14.32 lb)
Maximum (four drives, two DIMMs, optical drive or SSD, and two expansion boards installed)	9.69 kg (21.36 lb)

Power supply specifications

The server is configured with a non-hot-plug, nonredundant 200 W power supply.

Subtopics

200 W power supply specifications

200 W power supply specifications

Specification	Value
Input requirements	
Rated input voltage	100 V AC to 240 V AC
Rated input frequency	50 Hz to 60 Hz
Rated input current	3.5 A at 100 V AC
Rated input power	244 W at 115 V AC

Specification	Value
Efficiency	>82% at full load
Power supply output	
Rated steady-state power	200 W
Maximum peak power	200 W
Rated output power	200 W

Support and other resources

Subtopics

Accessing Hewlett Packard Enterprise Support
HPE product registration
Accessing updates
Customer self repair
Remote support
Documentation feedback

Accessing Hewlett Packard Enterprise Support

- For live assistance, go to the Contact Hewlett Packard Enterprise Worldwide website:

  https://www.hpe.com/info/assistance

- To access documentation and support services, go to the Hewlett Packard Enterprise Support Center website:

  https://www.hpe.com/support/hpesc

Information to collect

- Technical support registration number (if applicable)
- Product name, model or version, and serial number
- Operating system name and version

- Firmware version
- Error messages
- Product-specific reports and logs
- Add-on products or components
- Third-party products or components

HPE product registration

To gain the full benefits of the Hewlett Packard Enterprise Support Center and your purchased support services, add your contracts and products to your account on the HPESC.

- When you add your contracts and products, you receive enhanced personalization, workspace alerts, insights through the dashboards, and easier management of your environment.
- You will also receive recommendations and tailored product knowledge to self-solve any issues, as well as streamlined case creation for faster time to resolution when you must create a case.

To learn how to add your contracts and products, see **https://www.hpe.com/info/add-products-contracts**.

Accessing updates

- Some software products provide a mechanism for accessing software updates through the product interface. Review your product documentation to identify the recommended software update method.
- To download product updates:

  Hewlett Packard Enterprise Support Center

  https://www.hpe.com/support/hpesc

  My HPE Software Center

  https://www.hpe.com/software/hpesoftwarecenter

- To subscribe to eNewsletters and alerts:

  https://www.hpe.com/support/e-updates

- To view and update your entitlements, and to link your contracts and warranties with your profile, go to the Hewlett Packard Enterprise Support Center **More Information on Access to Support Materials** page:

  https://www.hpe.com/support/AccessToSupportMaterials

> **IMPORTANT**
>
> Access to some updates might require product entitlement when accessed through the Hewlett Packard Enterprise Support Center. You must have an HPE Account set up with relevant entitlements.

Customer self repair

Hewlett Packard Enterprise customer self repair (CSR) programs allow you to repair your product. If a CSR part needs to be replaced, it will be shipped directly to you so that you can install it at your convenience. Some parts do not qualify for CSR.

For more information about CSR, contact your local service provider.

Remote support

Remote support is available with supported devices as part of your warranty or contractual support agreement. It provides intelligent event diagnosis, and automatic, secure submission of hardware event notifications to Hewlett Packard Enterprise, which initiates a fast and accurate resolution based on the service level of your product. Hewlett Packard Enterprise strongly recommends that you register your device for remote support.

If your product includes additional remote support details, use search to locate that information.

HPE Get Connected

https://www.hpe.com/services/getconnected

HPE Tech Care Service

https://www.hpe.com/services/techcare

HPE Complete Care Service

https://www.hpe.com/services/completecare

Documentation feedback

Hewlett Packard Enterprise is committed to providing documentation that meets your needs. To help us improve the documentation, use the **Feedback** button and icons (at the bottom of an opened document) on the Hewlett Packard Enterprise Support Center portal (**https://www.hpe.com/support/hpesc**) to send any errors, suggestions, or comments. This process captures all document information.

Acronyms and abbreviations

3DS TSV

Three-dimensional stacked through-silicon via (integrated circuit packaging technology)

API

Application program interface

CAS

Column address strobe

CSR

Customer Self Repair

DDR4

Double data rate-4

EAC

EurAsian Conformity

fsx

File system exerciser

HPE RSS

HPE Rapid Setup Software

ISO

International Organization for Standardization

LFF

Large form factor

LRDIMM

load reduced dual in-line memory module

PCIe

Peripheral Component Interconnect Express

PDU

power distribution unit

POST

Power-On Self-Test

PSU

Power supply unit

RDIMM

Registered dual in-line memory module

RoHS

Restriction of Hazardous Substances

SATA

Serial ATA

SSA

Smart Storage Administrator

SSD

Solid-state drive

TPM

Trusted Platform Module

TMRA

recommended ambient operating temperature

UDIMM

Unregistered dual in-line memory module

UEFI

Unified Extensible Firmware Interface

UPS

Uninterruptible power supply