RETIRED: This document has been officially retired, and the base products listed herein are now considered obsolete and are no longer available for sale. Consequently, the information contained within may no longer be current. This document is provided exclusively for reference and informational purposes.

QuickSpecs

Overview

Hot Plug SAS/SATA and Non-Hot Plug SATA Models

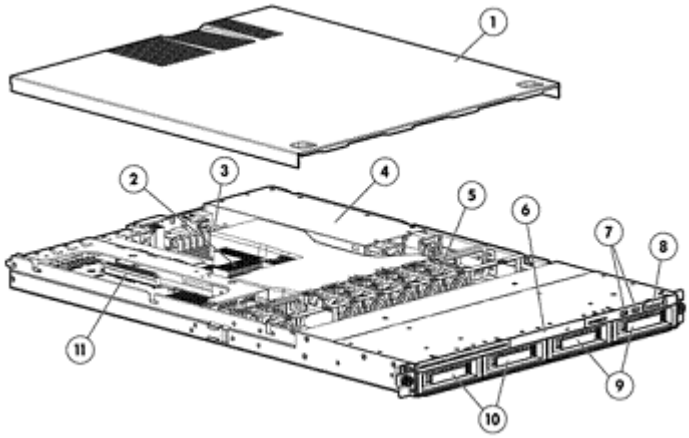

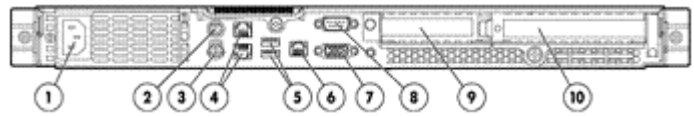

Front View:

1. Access panel
2. Quad-Core Intel® Xeon® 5400 series processors (supports up to two)
3. Eight PC2-5300 (DDR2-667) or PC2-6400 (DDR2-800) fully buffered DIMM memory slots
4. Power supply (650 Watts)
5. System fans
6. Optional CD-RW or DVD-ROM drive
7. Two USB ports
8. Power on/off & system LEDs
9. Optional 3rd and 4th 3.5" Non-Hot plug SATA or hot plug SAS/SATA hard drive bays
10. Standard 1st and 2nd 3.5" Non-Hot plug SATA or hot plug SAS/SATA hard drive bays
11. Expansion Slots:
    Non-Hot Plug Models – Two available x16 PCI-Express Gen2 slots
    Hot Plug Models – One available x16 PCI-Express slot Gen2 slot

Rear View:

1. Power Supply Cable Socket
2. PS/2 Mouse Port
3. PS/2 Keyboard Port
4. Two GbE LAN ports for NIC 1 and NIC 2 (RJ-45)
5. Rear USB ports
6. LO100i 10/100 Mbps LAN port for IPMI management (RJ-45)
7. Video Port
8. Serial Port
9. Low-Profile PCI Express x8/PCI-X riser board slot cover
10. Standard height/full-height PCI Express x16/PCI-X riser board

What's New

- Support for SATA Hot Plug 3.5" Midline (MDL) Solid State Drives
- Support for SAS Hot Plug 3.5" Enterprise (ENT) Hard Drives

At A Glance

The HP ProLiant DL160 G5 server is an affordable 1U, dual processor capable server equipped with essential performance features that provide customers with a platform to design a fully optimized solution. It is ideal for general purpose and high performance computing.

Overview

- Processors:
  - Supports up to two Intel® Quad-Core 5400 or Dual-Core 5200 sequence processors
    - Quad-Core Intel® Xeon® processors 5400 sequence with 12 MB Level 2 cache
    - Dual-Core Intel® Xeon® processors 5200 sequence with 6 MB Level 2 cache
  - Intel® 5400 Chipset
- Memory:
  - Supports up to 64 GB of PC2-5300 (DDR2-667) and up to 32 GB of PC2-6400 (DDR2-800) fully buffered DIMMs (DDR2-667) with Advanced ECC
- Internal Drive Support:
  - Support for up to four 3.5" Non-Hot plug serial ATA (SATA) hard drives or;
  - Support for up to four 3.5" Hot plug Serial Attached SCSI (SAS) or SATA hard drives.
  - NOTE: Installation of the Hot Plug Backplane 1U 2S Kit (445985-B21) is required if ordering third or fourth Hard Drives for Hot Plug models only.
  - Internal storage capacity of up to 1.0TB (4 x 1TB Hot Plug 3.5" SATA), 3.0TB (4 x 750 Non-Hot Plug SATA) or 4.0TB (4 x 1TB Hot Plug 3.5" SAS)
- Network Controller:
  - Two embedded NC105i PCIe Gigabit Server Adapters
- Storage Controllers:
  - Non-Hot Plug SATA Models: HP Embedded SATA RAID Controller
    NOTE: Transfer rate: 1.5 Gb/s SATA
  - Hot Plug SAS/SATA Models: HP SC40Ge 4-Port Internal SAS HBA with RAID 0, 1
    NOTE: When using the SC40Ge with SATA Hard Drives, 1.5G SATA Hard Drives are required.
    NOTE: Transfer rate: 1.5 Gb/s SATA, 3Gb/s SAS
- Expansion Slots:
  - Non-Hot Plug Models: Two available PCI Express 2.0 slots:
    - Slot 1: full-length/full-height PCI-Express 2.0 x16
    - Slot 2: low-profile/half-height PCI-Express 2.0 x16
  - Hot Plug Models: One available PCI-Express slot:
    - Slot 1: full-length/full-height PCI-Express 2.0 x16
    - Slot 2: low-profile/half-height PCI-X slot populated by the SAS/SATA storage controller
- Infrastructure Management:
  - HP Lights Out 100i Advanced Remote Management with new licensed key activated upgrades for Virtual KVM and virtual media support. LO100i management support for the DL160 G5 includes:
  - IPMI 2.0 & SMASH CLP support
  - ROM Setup Utility
  - Improvements to virtual media with the addition of USB 2.0 drives and protocol support for much faster transfer speeds and DVD-ROM support plus simplified virtual media (floppy and CD with no FTTP server requirements)
  - Enhanced browser interface and embedded KVM over IP provides OS-independent remote graphical console
- USB Ports:
  - Five USB ports (two front, one internal, two rear)
- Optical Drive:
  - Support for one (optional): DVD-ROM, DVD/CD RW
- Power Supply:
  - 650W Power Supply (Non-Hot Plug, Autoswitching)
  - Optional high-efficiency model
    - NOTE: Optional high-efficiency model requires the purchase of HP Power Supply Backplane (453652-B21)
- Additional Features:
  - Support for:
    - NVIDIA Quadro FX3700 512MB PCIe x 16 graphics card
    - NVIDIA Quadro FX1700 512MB PCIe x 16 graphics card
- Form Factor:

Overview

- Rack (1U)
- Fixed mounting rails included with all models

- Deployment/Serviceability:
  - Tool-less access to all system components for easy in rack serviceability
  - Customer Self Repair (CSR): HP products are designed with many CSR parts to minimize repair time and allow for greater flexibility in performing defective parts replacement
- Warranty:
  - This product is covered by a global limited warranty and supported by HP Services and a worldwide network of HP Authorized Channel Partners. Hardware diagnostic support and repair is available for one year from date of purchase. Support for software and initial setup is available for 90 days from date of purchase. Enhancements to warranty services are available through HP Care Pack services or customized service agreements. Hard drives have either a one year or three year warranty; refer to the specific hard drive QuickSpecs for details.
    NOTE: Server Warranty includes 1 year Parts, 1 year Labor, 1-year on-site support with next business day response. Warranty repairs may be accomplished through the use of Customer Self Repair (CSR) parts. These parts fall into two categories: 1) Mandatory CSR parts are designed for easy replacement. A travel and labor charge will result when customers decline to replace a Mandatory CSR part; 2) Optional CSR parts are also designed for easy replacement but may involve added complexity. Customers may choose to have HP replace Optional CSR parts at no charge. Additional information regarding worldwide limited warranty and technical support is available at: http://h18004.www1.hp.com/products/servers/platforms/warranty/index.html.

Standard Features

NOTE: For a brief, printer friendly data sheet that describes this product and informs you of the essential capabilities and specifications, please visit: http://h71028.www7.hp.com/ERC/downloads/4AA1-6954ENW.pdf
NOTE: For the Standard Features shipped in the Factory Integrated Models, please see the "Configuration Information - Factory Integrated Models" section.

Processor One of the following depending on Model	Quad-Core Intel® Xeon® processor X5482 (3.20 GHz, 120W, 1600MHz FSB) NOTE: Available through Configure To Order only. See Factory Integration Models section for more details. Quad-Core Intel® Xeon® processor X5472 (3.00 GHz, 120W, 1600MHz FSB) Quad-Core Intel® Xeon® processor X5470 (3.33 GHz, 120W, 1333MHz FSB) NOTE: Available through Configure To Order only. See Factory Integration Models section for more details. Quad-Core Intel® Xeon® processor X5460 (3.16 GHz, 120W, 1333MHz FSB) NOTE: Available through Configure To Order only. See Factory Integration Models section for more details. Quad-Core Intel® Xeon® processor L5430 (2.60 GHz, 50W, 1333MHz FSB) NOTE: Available through Configure To Order only. See Factory Integration Models section for more details. Quad-Core Intel® Xeon® processor L5420 (2.50 GHz, 50W, 1333MHz FSB) Quad-Core Intel® Xeon® processor L5410 (2.33 GHz, 50W, 1333MHz FSB) Quad-Core Intel® Xeon® processor E5472 (3.00 GHz, 80W, 1600MHz FSB) Quad-Core Intel® Xeon® processor E5462 (2.80 GHz, 80W, 1600MHz FSB) Quad-Core Intel® Xeon® processor E5430 (2.66 GHz, 80W, 1333MHz FSB) Quad-Core Intel® Xeon® processor E5405 (2.00 GHz, 80W, 1333MHz FSB) **Dual-Core Processors** Dual-Core Intel® Xeon® processor X5272 (3.40 GHz, 80W, 1600MHz FSB) Dual-Core Intel® Xeon® processor L5240 (3.00 GHz, 40W, TDP, 1333MHz FSB) NOTE: Available through Configure To Order only. See Factory Integration Models section for more details.
Upgradeability	Upgradeable to two processors
Chipset	Intel® 5400 Chipset
Cache Memory	12 MB (2 x 6 MB) Level 2 cache (5400 sequence) 6 MB (1 x 6 MB) Level 2 cache (5200 sequence)
Memory Protection	Advanced ECC capabilities

Standard Features

Memory	Type	PC2-5300 (DDR2-667) and PC2-6400 (DDR2-800)	
	Standard	1 GB	(2 x 512 MB)
	Maximum	32 GB	(8 x 4 GB) PC2-6400
		64 GB	(8 x 8 GB)

Network Controller Two embedded NC105i PCIe Gigabit Server Adapters

Expansion Slots #	Technology	Bus Width	Connector Width*	Bus Number*	Device No.**	Form Factor	Notes
1	PCI-Express 2.0	x16	x16	1	0	Full length, full height	3.3 volts
1	PCI-X***	64-bit	N/A	5	1	Full length, full height	3.3 volts
2	PCI-Express 2.0	x16	x16	6	3	Low Profile	3.3 volts
2	PCI-X***	64-bit	N/A	5	1	Low Profile	3.3 volts

NOTE: All slots can accept universal keyed PCI cards

* Default bus assignment. Inserting cards with PCI bridges may alter the actual bus assignment number.

** Slots are enumerated differently based on OS. MS OS's enumerate from lowest to highest Device ID by bus (starting with the lowest bus).

*** PCI-X bus speed will be 133MHz when only one PCI-X card is installed. It will be 100MHz when both slots have PCI-X cards installed.

Storage Controller	Non-Hot Plug SATA Models	HP Embedded SATA RAID Controller (integrated into the south-bridge) supporting SW RAID 0,1 NOTE: Transfer rate: 1.5 Gb/s SATA
	Hot Plug SATA/SAS Models	HP SC40Ge HBA with RAID 0, 1 NOTE: When using the SC40Ge with SATA Hard Drives, 1.5G SATA Hard Drives are required. NOTE: Transfer rate: 1.5 Gb/s SATA, 3 Gb/s SAS

NOTE: A diskette drive, USB floppy drive key or virtual FDD using LO100 Advanced Pack is needed to install storage controller drivers during a Windows operating system installation from a CD.

Storage	Diskette Drives	Via USB only
	Optical Drives	Optional 8x IDE (ATAPI) DVD-ROM drive, slim
		Optional 24x IDE (ATAPI) CD-ROM drive (optional)
	Drive Bays	Up to 4 Non-hot plug SATA 3.5" drives
		Up to 4 Hot plug SAS/SATA 3.5" drives

Standard Features

Maximum Internal Storage	Non-Hot Plug SATA	3.0TB	4 x 750GB
	Hot Plug SATA	4.0TB	4 x 1TB
	Hot Plug SAS	4.0TB	4 x 1TB

Interfaces	Parallel	None
	Network RJ-45(Ethernet)	2 10/100/1000 NIC ports (plus 1 dedicated for the HP ProLiant Lights Out 100i Remote Management)
	Serial	1
	Pointing Device (Mouse)	1
	Graphics	1
	Keyboard	1
	USB	5 (two front, one internal, two rear) NOTE: Please see the following URL for additional information regarding USB support: http://h18004.www1.hp.com/products/servers/platforms/usb-support.html.

Graphics	32MB shared supporting 1600x1200x16M resolution

Form Factor	Rack (1U), (1.75 in/4.45 cm)

Remote Management	Lights-Out 100i	HP Lights-Out 100i Remote Management delivers affordable, entry level remote management capabilities for HP ProLiant 100 Series servers with embedded LO100i. It allows customers or their service providers to remotely manage ProLiant 100 Series servers remotely over a LAN or the Internet and consists of the following: • LO100i Standard is embedded remote management and provides basic remote control via telnet, browser, and IPMI 2.0 and SMASH • LO100i Advanced Pack License are upgrades for essential, secure, remote control, serial console, virtual media, and Virtual KVM (graphical hardware-based, remote console) NOTE: Flexible and volume quantity (AKA) license kits are available for the Lights-Out 100i Lights-Out 100 Advanced Pack licenses as well as Electronic License To Use (E-LTU). AKA Tracking licenses require a 100 unit minimum forecast at initial contract signing. For these additional part numbers, please refer to each software products. QuickSpecs at this link for more information: www.hp.com/go/lo100.

Standard Features

Industry Standard Compliance	ACPI V2.0 Compliant PCI 2.2 Compliant PXE Support WOL Support Microsoft® Logo certifications IPMI 2.0, SMASH CLP compliant
Manageability	HP Lights-Out 100i Standard provides the following OS-independent remote control capabilities: • Virtual power • System event log access • System health • Remote serial console (serial redirection) • Browser, Telnet access • SMASH-CLP compliant • IPMI 2.0 compliant HP Lights-Out 100i Advanced Pack provides license key activated upgrades to the following: • Virtual KVM (KVM over IP functionality embedded on the system board)
Security	Power-on password Setup password
Server Power Cords	One 6' Highline (IEC-IEC) power cord ships standard NOTE: HP ProLiant DL servers no longer ship standard with NEMA power cords (163719-002) that allow connection to 110V US wall outlets in a home or office. ProLiant DL servers are primarily connected to PDU's in data center racks so they now ship standard with only a PDU power cord (416151-B21). If a user wishes to power a ProLiant DL server using a 110V receptacle (NEMA-15), the NEMA power cord (227099-001) must be ordered separately. If customers require a local power cord, they can check the power cord matrix for the appropriate cord. Please see the following power cord matrix: http://www.hp.com/go/powercordmatrix.
UPS and PDU Power Cord Matrix	Please see the UPS and PDU cable matrix's on the HP Power Protection and Management page. Under Power Cords, click on the "HP Power Cord Matrix" link. That link will list cable descriptions, requirements, and specifications for UPS and PDU units. Please see the following link: www.hp.com/products/powercords.
Power Supply	650 Watts, auto-switching, PFC (Power Factor Correcting) NOTE: Factory upgradeable to high-efficiency (HE) power supply for lower TCO

Standard Features

System Fans	6 system fans ship standard; Non-hot plug, Non-redundant
Operating Systems and Virtualization Software Support for ProLiant Servers	Microsoft Windows Server Microsoft Windows Server Hyper V Red Hat Enterprise Linux (RHEL) SUSE Linux Enterprise Server (SLES) Solaris 10 for x86/x64 based Systems NOTE: For more information on HP's Certified and Supported ProLiant Servers for OS and Virtualization Software and latest listing of software drivers available for your server, please visit our Support Matrix at: http://www.hp.com/go/supportos and our driver download page http://www.hp.com/support/DL160G5.
Rack Airflow Requirements	Rack 10000 G2 series Cabinets The increasing power of new high-performance processor technology requires increased cooling efficiency for rack-mounted servers. The 10000 G2 Series Racks provide enhanced airflow for maximum cooling, allowing these racks to be fully loaded with servers using the latest processors. CAUTION: If a third-party rack is used, observe the following additional requirements to ensure adequate airflow and to prevent damage to the equipment: Front and rear doors: If your 42U server rack includes closing front and rear doors, you must allow 5,350 sq cm (830 square inches) of hole evenly distributed from top to bottom to permit adequate airflow (equivalent to the required 64 percent open area for ventilation). Side: The clearance between the installed rack component and the side panels of the rack must be a minimum of 7 cm (2.75 inches) CAUTION: Always use blanking panels to fill all remaining empty front panel U-spaces in the rack. This arrangement ensures proper airflow. Using a rack without blanking panels results in improper cooling that can lead to thermal damage. NOTE: For additional information, refer to the Setup and Installation Guide or the Documentation CD provided with the server, or to the server documentation located in the Support section at the following URL: www.hp.com/servers/dl160.
Rack Support	The DL Fixed Rail System supports installation in racks with square or round mounting holes (including Compaq/HP 7000, 9000, 10000 and HP series), with an adjustment range of 24" - 36".
Telco Rack Support	Installation into Telco 2 post, and 4 post, or threaded holes racks requires a 3rd party option kit. For additional information, please visit: www.racksolutions.com.

Standard Features

Factory Express Portfolio for Servers and Storage

HP Factory Express offers configuration, customization, integration and deployment services for HP servers and storage products. Customers can choose how their factory solutions are built, tested, integrated, shipped and deployed.

Factory Express offers service packages for simple configuration, racking, installation, complex configuration and design services as well as individual factory services, such as image loading, asset tagging, and custom packaging. HP products supported through Factory Express include a wide array of servers and storage: HP Integrity, HP ProLiant, HP ProLiant Server Blades, HP BladeSystem, HP 9000 servers as well as the MSAxxxx, VA7xxx, EVA, XP, rackable tape libraries and configurable network switches.

For more information on Factory Express services for your specific server model please contact your sales representative or go to: http://www.hp.com/go/factory-express.

HP Enterprise Configurator

The HP eConfigure Enterprise Configurator now provides factory default racking for our HP hardware portfolio. This approach is aligned with our strategic direction to meet the needs and expectations of our valued customers. If you require "custom" rack configuration, please contact HP's Customer Business Center or an Authorized Partner for assistance.

Service and Support

HP Care Pack Services provide total care and support expertise with committed response designed to meet your IT and business needs.

HP Care Pack Services provide total care and support expertise with committed response designed to meet your IT and business needs.

HP Care Pack services include coverage for the HP branded hardware options qualified for the server that are purchased at the same time or afterward and internal to the enclosure. It also includes the 22" and smaller external monitors and tower UPS options up to 3kVA. These items will be covered at the same service level and for the same coverage period as the server. Coverage of UPS Battery is not included and standard warranty terms & conditions apply. For servers or storage systems installed within a rack, service also covers all HP qualified rack options installed within the same rack.

To fully capitalize on your HP ProLiant servers' capabilities requires a service partner who thoroughly understands your server technology and systems environment. HP Services, an industry leader in provision of multi vender support solutions provides a range of support services designed to meet the varying needs of business. Whether an SMB or large global corporation HP has a ProLiant server support offer to help you speedily deploy and maximize system uptime.

Recommended Service – Simplify ProLiant solution implementation, maintenance and management.

- Support Service – 3 Year, 9x5 Next Business Day coverage, excluding HP holidays only
- Deployment Service – Hardware Installation only

Enhanced Service – Optimize service level to increase IT performance and availability

- Support Service – 3 Year 13x5 Same Business Day, 4-Hour response coverage
- Deployment Service – Installation and Start-up only

Installation & Start-Up of a ProLiant server and Microsoft or Linux O/S per the Customer Description and/or Data Sheet. To be delivered on a scheduled basis 8am-5pm, M-F, excl. HP holidays.

For a complete listing of service offerings and information visit:
http://www.hp.com/services/proliantservices
http://www.hp.com/go/proliant/carepack

HPC Interconnects

NOTE: High Performance Computing (HPC) interconnect technologies are available for the DL160 G5 under the Cluster Platform product portfolio. These high-speed interconnects are fully supported by HP when they are part of these configure to order clusters. Solutions can be defined with a lot of flexibility with the help of configuration tools. Please visit the following URL to configure HPC Clusters with InfiniBand, Gigabit Ethernet or Myrinet Interconnects: http://www.hp.com/techservers/clusters/ucp/index.html

HPC Interconnects	InfiniBand	PCI-X and PCI-Express adapters
	Gigabit Ethernet	Use embedded ports
	Myrinet XP	PCI-X Rev D, Rev E and Rev F adapters

Non-Hot Plug Serial ATA (SATA) Models

NOTE: Non-Hot Plug models are not upgradeable to Hot Plug. Non-Hot Plug models require the addition of the HP HBA SAS-SATA 4x1LN Cable Kit (P/N: 452130-B21) in order to connect a hardware RAID controller.

HP DL160 G5 X5472 Non-Hot Plug SATA, 2GB, (1P) 445198-xx1 HP DL160 G5 E5430 Non-Hot Plug SATA, 1GB, (1P) 445197-xx1 HP DL160 G5 E5405 Non-Hot Plug SATA, 1GB, (1P) 445196-xx1	Processor(s) One of the following depending on model	(1) Quad-Core Intel® Xeon® processor X5472 (3.00 GHz, 120W, 1600 MHz FSB) (1) Quad-Core Intel® Xeon® processor E5430 (2.66 GHz, 80W, 1333MHz FSB) (1) Quad-Core Intel® Xeon® processor E5405 (2.00 GHz, 80W, 1333MHz FSB)
	Cache Memory	12MB (2 x 6MB) Level 2 cache
	Memory One of the following depending on model	2GB (2 x 1GB) PC2-5300 DDR2 fully buffered DIMMs (667MHz) with Advanced ECC (X5472 models) 1GB (2 x 512MB) PC2-5300 DDR2 fully buffered DIMMs (667MHz) with Advanced ECC (E5430, E5405 models)
	Network Controller	Two embedded NC105i PCIe Gigabit Server Adapters
	Storage Controller	HP Embedded SATA RAID Controller
	Hard Drive	160GB NHP SATA HDD
	Internal Storage	3.0TB maximum (4 x 750GB Non-Hot plug 3.5" SATA hard drives)
	Optical Drive	Optional CD/DVD-ROM, DVD/CD RW
	Form Factor	Rack (1U)

Hot Plug Serial ATA (SATA)/ Serial Attached SCSI (SAS) Models

HP DL160 G5 X5472 Hot Plug SAS/SATA, 2GB, (1P) 445204-xx1 HP DL160 G5 E5430 Hot Plug SAS/SATA, 1GB, (1P) 445203-xx1 HP DL160 G5 E5405 Hot Plug SAS/SATA 1GB, (1P) 445202-xx1	Processor(s) One of the following depending on model	(1) Quad-Core Intel® Xeon® processor X5472 (3.00 GHz, 120W, 1600 MHz FSB) (1) Quad-Core Intel® Xeon® processor E5430 (2.66 GHz, 80W, 1333MHz FSB) (1) Quad-Core Intel® Xeon® processor E5405 (2.00 GHz, 80W, 1333MHz FSB)
	Cache Memory	12 MB (2 x 6 MB) Level 2 cache
	Memory One of the following depending on model	2 GB (2 x 1 GB) PC2-5300 DDR2 fully buffered DIMMs (667MHz) with Advanced ECC (X5472 models) 1 GB (2 x 512 MB) PC2-5300 DDR2 fully buffered DIMMs (667MHz) with Advanced ECC (E5430, E5405 models)
	Network Controller	Two embedded NC105i PCIe Gigabit Server Adapters
	Storage Controller	HP SC40Ge SAS HBA with RAID
	Hard Drive	None ship standard (up to 4 Hot Plug SATA or SAS drives supported)
	Internal Storage	4.0TB max. (4 x 1TB Hot Plug 3.5" SAS/SATA hard drives)
	Optical Drive	Optional CD/DVD-ROM, DVD/CD RW
	Form Factor	Rack (1U)

Models

Country Code Key	xx = 00	U.S.
	xx = 20	Brazil (P/N 445202-201 only)
	xx = 29	Japan
	xx = 37	APD
	xx = 42	Euro
	xx = AA	PRC

NOTE: This section lists some of the steps required to configure a Factory Integrated Model. To ensure only valid configurations are ordered, HP recommends the use of an HP approved configurator. Contact your local sales representative for additional information.
NOTE: HP does not allow factory integration of options into standard models listed above. Configure-to-order servers must start with a CTO Chassis..
NOTE: FIO indicates that this option is a Factory Installable Option.

Step 1: Base Configuration (choose one of the following configurable models)

Non-Hot Plug SATA Model

NOTE: Non-Hot Plug models are not upgradeable to Hot Plug. Non-Hot Plug models require the addition of the HP HBA SAS-SATA 4x1LN Cable Kit (P/N: 452130-B21) in order to connect a hardware RAID controller.

HP ProLiant DL160 G5 Non-Hot Plug SATA Rack CTO Chassis 445192-B21

Factory Integrated Model ships with:

Two embedded NC105i PCIe Gigabit Server Adapters (WOL & PXE-capable)

Two available PCI-Express 2 slots:

Slot 1: full-length/full-height
Slot 2: low-profile/half-height

650 Watt Power Supply

One Highline IEC Power Cord

6 Non-Hot Plug Fans

Rack (1U), (1.75 in / 4.45 cm)
Fixed Rails

Hot Plug Model

HP ProLiant DL160 G5 Hot Plug SAS/SATA Rack CTO Chassis 445193-B21

Factory Integrated Model ships with:

Two embedded NC105i PCIe Gigabit Server Adapters (WOL & PXE-capable)

Two available PCI-Express 2 slots:

Slot 1: full-length/full-height
Slot 2: low-profile/half-height

650 Watt Power Supply

One Highline IEC Power Cord

6 Non-Hot Plug Fans

Rack (1U), (1.75 in / 4.45 cm)
Fixed Rails

Step 2: Choose Required Options (only one of the following from each list unless otherwise noted)

Processors	Quad-Core Processors	
	Quad-Core Intel® Xeon® processor X5482 (3.20 GHz, 120W, 1600MHz FSB), FIO NOTE: If 2 processors are desired, select one 495614-L21 and one 495614-B21.	495614-L21
	Quad-Core Intel® Xeon® processor X5472 (3.00 GHz, 120W, 1600MHz FSB), FIO NOTE: If 2 processors are desired, select one 462465-L21 and one 462465-B21.	462465-L21
	Quad-Core Intel® Xeon® processor X5470 (3.33 GHz, 120W, 1333MHz FSB), FIO NOTE: If 2 processors are desired, select one 495612-L21 and one 495612-B21.	495612-L21
	Quad-Core Intel® Xeon® processor X5460 (3.16 GHz, 120W, 1333MHz FSB), FIO NOTE: If 2 processors are desired, select one 446085-L21 and one 446085-B21.	446085-L21
	Quad-Core Intel® Xeon® processor L5430 (2.60 GHz, 50W, 1333MHz FSB), FIO NOTE: If 2 processors are desired, select one 495616-L21 and one 495616-B21.	495616-L21
	Quad-Core Intel® Xeon® processor L5420 (2.50 GHz, 50W, 1333MHz FSB), FIO NOTE: If 2 processors are desired, select one 495479-L21 and one 495479-B21.	495479-L21
	Quad-Core Intel® Xeon® processor L5410 (2.33 GHz, 50W, 1333MHz FSB), FIO NOTE: If 2 processors are desired, select one 448369-L21 and one 448369-B21.	448369-L21
	Quad-Core Intel® Xeon® processor E5472 (3.00 GHz, 80W, 1600MHz FSB), FIO NOTE: If 2 processors are desired, select one 448365-L21 and one 448365-B21.	448365-L21
	Quad-Core Intel® Xeon® processor E5462 (2.80 GHz, 80W, 1600MHz FSB), FIO NOTE: If 2 processors are desired, select one 463076-L21 and one 463076-B21.	463076-L21
	Quad-Core Intel® Xeon® processor E5430 (2.66 GHz, 80 W, 1333 MHz FSB), FIO NOTE: If 2 processors are desired, select one 446079-L21 and one 446079-B21.	446079-L21
	Quad-Core Intel® Xeon® processor E5405 (2.00 GHz, 80W, 1333MHz FSB), FIO NOTE: If 2 processors are desired, select one 446077-L21 and one 446077-B21.	446077-L21
	Dual-Core Processors	
	Dual-Core Intel® Xeon® processor X5272 (3.40 GHz, 80W, 1600MHz FSB) NOTE: If 2 processors are desired, select one 448371-L21 and one 448371-B21.	448371-L21
	Dual-Core Intel® Xeon® processor L5240 (3.00 GHz, 40W, 1333MHz FSB), FIO NOTE: If 2 processors are desired, select one 448373-L21 and one 448373-B21.	448373-L21

Configuration Information - Factory Integrated Models

Memory	1 GB FBD PC2-5300 2 X 512 MB Kit	397409-B21
	2 GB FBD PC2-5300 2 X 1 GB Kit	397411-B21
	4 GB FBD PC2-5300 2 X 2 GB Kit	397413-B21
	8 GB FBD PC2-5300 2 X 4 GB Kit	397415-B21
	Dual Rank	
	4 GB FBD PC2-6400 800MHz 2 x 2 GB Dual Rank Kit	484060-B21
	8 GB FBD PC2-6400 2 x 4 GB Dual Rank Kit	484062-B21
	16 GB FBD PC2-5300 2 x 8 GB Dual Rank Kit	413015-B21
	64 GB FBD PC2-5300 8 x 8 GB Dual Rank Kit	495604-B21
	Low Power	
	2 GB FBD PC2-5300 2 X 1 GB Low Power Kit	461826-B21
	4 GB FBD PC2-5300 2 x 2 GB Low Power Kit	461828-B21
	8 GB FBD PC2-5300 2 x 4 GB Low Power Kit	466440-B21
Hard Drive	NOTE: The components of a storage subsystem (e.g. the drive, the HBA/controller, firmware, and the server backplane) should operate at the same data transfer rate or the system bandwidth will be negotiated down to an acceptable level for all components.	
	NOTE: Hard drives have either a one year or three year warranty; refer to the specific hard drive QuickSpecs for details.	
	NOTE: A minimum of one hard drive is required when purchasing Non-Hot Plug CTO Chassis Model (P/N 445192-B21).	
	NOTE: SATA Non-Hot Plug Hard Drives ONLY required when purchasing Non-Hot Plug CTO Chassis Models (445192-B21) in Step 1.	
	Serial-ATA (SATA) Non-Hot Plug Hard Drives (Non-Hot Plug Models Only)	
	SATA Non-Hot Plug 3.5" Midline (MDL) Drive	
	HP 750GB 3G SATA 7.2K NHP 3.5" MDL HDD	462595-B21
	HP 500GB 3G SATA 7.2K NHP 3.5" MDL HDD	458941-B21
	HP 250GB 3G SATA 7.2K NHP 3.5" MDL HDD	458939-B21
	SATA Non-Hot Plug 3.5" Entry (ETY) Drives	
	HP 160GB 3G SATA 7.2K NHP 3.5" ETY HDD	458947-B21
	SATA Non-Hot Plug	
	HP 500GB 1.5G SATA 7.2K NHP 3.5" HDD, FIO	404469-B21

Configuration Information - Factory Integrated Models

Storage Controllers	NOTE: A minimum of one SAS Controller is required when purchasing Hot Plug CTO Chassis Model (P/N 445193-B21). NOTE: The below storage controllers are intended for use with internal drives ONLY in the Hot Plug CTO Chassis Model (P/N 445193-B21).	
	HP SC44Ge Host Bus Adapter NOTE: When using the SC44Ge with SATA Hard Drives, 1.5G SATA Hard Drives are required. Transfer rate: 1.5 Gb/s SATA, 3 Gb/s SAS.	416096-B21
	HP SC40Ge 4 Internal PCIe SAS RAID Half Height HBA, FIO NOTE: Recommended HBA when purchasing Hot Plug CTO Chassis Model (P/N 445193-B21). NOTE: When using the SC40Ge with SATA Hard Drives, 1.5G SATA Hard Drives are required. Transfer rate 1.5 Gb/s SATA, 3 Gb/s SAS.	449363-B21
	HP Smart Array E500/256MB Controller with Battery, FIO NOTE: Customers can only order one Smart Array E500/256MB Controller and one Battery-backed write cache upgrade (P/N 383280-B21) for the HP ProLiant DL160 G5 server based on battery space.	462105-B21
	Battery-backed write cache upgrade NOTE: When installing a battery-backed write cache module, the HP Smart Array E500 must be installed in the full-length PCI slot. This 256MB Battery-backed write cache upgrade for RAID 5 support.	383280-B21
	HP Smart Array E200/128 BBWC Controller	411508-B21
	HP HBA SAS-SATA 4x1LN Cable Kit	452130-B21
	NOTE: This option is required for any internal port HBA or controller that has a standard 4 port SAS/SATA connector.	

Step 3: Choose Additional Factory Integratable Options (only one of the following from each list unless otherwise noted)

Power Supply	HP 1200W High Efficiency Power Supply Kit, FIO NOTE: Selection of the HE Power Supply Unit will remove the 650 Watt standard power supply and requires the purchase of Power Supply Backplane (p/n 453652-B21).	453650-B21
	HP Power Supply Backplane, FIO NOTE: This backplane must be ordered with the High Efficiency Power Supply (P/N 453650-B2).	453652-B21

Step 4: Choose Additional Options for Factory Integration

NOTE: For additional options, please refer to the "Core Options" and "Additional Options" section below.

Core Options

NOTE: Some options may not be available for factory integration. Please contact an HP sales representative for additional information.

Processor	**Quad-Core Processors**	
	Quad-Core Intel® Xeon® processor X5482 (3.20 GHz, 120W, 1600MHz FSB)	495614-B21
	Quad-Core Intel® Xeon® processor X5472 (3.00 GHz, 120W, 1600MHz FSB)	462465-B21
	Quad-Core Intel® Xeon® processor X5470 (3.33 GHz, 120W, 1333MHz FSB)	495612-B21
	Quad-Core Intel® Xeon® processor X5460 (3.16 GHz, 120W, 1333MHz FSB)	446085-B21
	Quad-Core Intel® Xeon® processor L5430 (2.60 GHz, 50W, 1333MHz FSB)	495616-B21
	Quad-Core Intel® Xeon® processor L5420 (2.50 GHz, 50W, 1333MHz FSB)	495479-B21
	Quad-Core Intel® Xeon® processor L5410 (2.33 GHz, 50W, 1333MHz FSB)	448369-B21
	Quad-Core Intel® Xeon® processor E5472 (3.00 GHz, 80W, 1600MHz FSB)	448365-B21
	Quad-Core Intel® Xeon® processor E5462 (2.80 GHz, 80W, 1600MHz FSB)	463076-B21
	Quad-Core Intel® Xeon® processor E5430 (2.66 GHz, 80W, 1333MHz FSB)	446079-B21
	Quad-Core Intel® Xeon® processor E5405 (2.00 GHz, 80W, 1333MHz FSB)	446077-B21
	Dual-Core Processors	
	Dual-Core Intel® Xeon® processor X5272 (3.40 GHz, 80W, 1600MHz FSB)	448371-B21
	Dual-Core Intel® Xeon® processor L5240 (3.00 GHz, 40W, 1333MHz FSB)	448373-B21
Memory	1 GB FBD PC2-5300 2 X 512 MB Kit	397409-B21
	2 GB FBD PC2-5300 2 X 1 GB Kit	397411-B21
	4 GB FBD PC2-5300 2 X 2 GB Kit	397413-B21
	8 GB FBD PC2-5300 2 X 4 GB Kit	397415-B21
	Dual Rank	
	4 GB FBD PC2-6400 2 X 2 GB Dual Rank Kit	484060-B21
	8 GB FBD PC2-6400 2 x 4 GB Dual Rank Kit	484062-B21
	16 GB FBD PC2-5300 2 x 8 GB Dual Rank Kit	413015-B21
	64 GB FBD PC2-5300 8 x 8 GB Dual Rank Kit	495604-B21
	Low Power	
	2 GB FBD PC2-5300 2 X 1 GB Low Power Kit	461826-B21
	4 GB FBD PC2-5300 2 x 2 GB Low Power Kit	461828-B21
	8 GB FBD PC2-5300 2 x 4 GB Low Power Kit	466440-B21
Optical Drives	DVD-ROM Drive Optical Drives	447889-B21
	DVD/CD RW Drive Optical Drives	447891-B21
Hard Drives	NOTE: The components of a storage subsystem (e.g. the drive, the HBA/controller, firmware, and the server backplane) should operate at the same data transfer rate or the system bandwidth will be negotiated down to an acceptable level for all components. NOTE: Hard drives have either a one year or three year warranty; refer to the specific hard drive QuickSpecs for details.	

SATA Non-Hot Plug 3.5" Midline (MDL) Drives (Non-Hot Plug Models Only)	
HP 750GB 3G SATA 7.2K NHP 3.5" MDL HDD	462595-B21
HP 500GB 3G SATA 7.2K NHP 3.5" MDL HDD	458941-B21
HP 250GB 3G SATA 7.2K NHP 3.5" MDL HDD	458939-B21
SATA Non-Hot Plug 3.5" Entry (ETY) Drives	
HP 160GB 3G SATA 7.2K NHP 3.5" ETY HDD	458947-B21
SATA Hot Plug 3.5" Midline (MDL) Drives (SAS/SATA Hot Plug Models Only)	
NOTE: A SAS HBA or Array Controller is required.	
HP 1TB 3G SATA 7.2K 3.5" MDL HDD	454146-B21
HP 750GB 3G SATA 7.2K 3.5" MDL HDD	458930-B21
HP 500GB 3G SATA 7.2K 3.5" MDL HDD	458928-B21
HP 250GB 3G SATA 7.2K 3.5" MDL HDD	458926-B21
SATA Hot Plug 3.5" Entry (ETY) Drives	
HP 160GB 3G SATA 7.2K 3.5" ETY HDD	458945-B21
NOTE: Server BIOS update is required to support 3G SATA drives when configured with embedded SATA controller. Please see communication for details: http://h20000.www2.hp.com/bizsupport/TechSupport/Document.jsp?objectID=c01511475	
NOTE: Please see QuickSpecs for Technical Specifications and additional information: http://h18000.www1.hp.com/products/quickspecs/13021_div/13021_div.html (Worldwide)	
3.5" SATA Hot Plug Drives	
HP 750GB 1.5G SATA 7.2K 3.5" HDD	432341-B21
HP 500GB 1.5G SATA 7.2K 3.5" HDD	395473-B21
HP 250GB 1.5G SATA 7.2K 3.5" HDD	349239-B21
HP 160GB 1.5G SATA 7.2K 3.5" HDD	349238-B21
SATA Hot Plug 3.5" Midline (MDL) Solid State Drives	
HP 120GB 3G SATA 3.5in MDL 1y Wty SSD	570763-B21
HP 60GB 3G SATA 3.5in MDL 1y Wty SSD	570761-B21
NOTE: Please see QuickSpecs for Technical Specifications and additional information: http://h18000.www1.hp.com/products/quickspecs/13145_div/13145_div.html (Worldwide)	
3.5" SATA Non-Hot Plug Drives	
NOTE: The following previous generation of 1.5G SATA Hot Plug hard drives are supported.	
HP 250GB 1.5G SATA 7.2K NHP 3.5" HDD	411276-B21
HP 160GB 1.5G SATA 7.2K NHP 3.5" HDD	411275-B21
NOTE: Please see the QuickSpecs for Technical Specifications and additional information: http://h18000.www1.hp.com/products/quickspecs/11940_div/11940_div.html (Worldwide)	
SAS Hot Plug 3.5" Midline (MDL) Drives	

Core Options

	HP 1TB 7.2K 3.5" DP SAS MDL HDD	461137-B21
	HP 750GB 7.2K 3.5" DP SAS MDL HDD	461135-B21
	SAS Hot Plug 3.5" Enterprise (ENT) Drives	
	HP 600GB 6G SAS 15K 3.5" DP ENT HDD	516828-B21
	HP 450GB 6G SAS 15K 3.5" DP ENT HDD	516816-B21
	HP 300GB 6G SAS 15K 3.5" DP ENT HDD	516814-B21
	HP 300GB 3G SAS 15K 3.5" SP HDD	431944-B21
	HP 300GB 3G SAS 15K 3.5" DP HDD	416127-B21
	HP 146GB 3G SAS 15K 3.5" SP HDD	375872-B21
	HP 146GB 3G SAS 15K 3.5" DP HDD	384854-B21
	HP 72GB 3G SAS 15K 3.5" SP HDD	375870-B21
	NOTE: The purchase of SAS HBA or array controller is required.	
	NOTE: Please see the QuickSpecs for Technical Specifications and additional information: hhttp://h18000.www1.hp.com/products/quickspecs/12244_div/12244_div.html (Worldwide)	
Communications	Gigabit Ethernet Adapters	
	HP NC110T PCI Express Gigabit Server Adapter	434905-B21
	HP NC360T PCI Express Dual Port Gigabit Server Adapter	412648-B21
	HP NC364T PCI Express Quad Port Gigabit Server Adapter	435508-B21
	HP NC373F PCI Express Multifunction Gigabit Server Adapter	394793-B21
	HP NC373T PCI Express Multifunction Gigabit Server Adapter	394791-B21
	HP NC380T PCI Express Dual Port Multifunction Gigabit Server Adapter NOTE: Supported on a Full Length-Full Height slot only.	394795-B21
	HP NC382T PCI Express Dual Port Multifunction Gigabit Server Adapter	458492-B21
	10 Gigabit Ethernet Adapters	
	HP NC522SFP Dual Port 10GbE Server Adapter NOTE: A minimum of two Gigabytes (2 GB) of server memory is required per each NC522SFP adapter. NOTE: Direct Attach Cable (DAC) for copper environments or fiber transceivers and cables for fiber-optic environments must be purchased separately.	468332-B21

Additional Options

Remote Management	Lights-Out 100i Advanced Pack	
	HP LO100i Advanced Pack, No Media 1-Server License including 1 year of 24x7 Technical Support and Updates	530521-B21
	NOTE: Flexible and volume quantity (AKA) license kits are available for the Lights-Out 100i Advanced Pack licenses as well as Electronic License To Use (E-LTU). AKA Tracking licenses require a 100 unit minimum forecast at initial contract signing. For these additional part numbers, please refer to each software products' QuickSpecs at this link for more information: www.hp.com/go/lo100	
HP Insight Software	HP Insight Rapid Deployment software	
	HP Insight Rapid Deployment software No Media 1-Server License including 1 year of 24x7 Technical Support and Updates	452151-B21
	NOTE: This license allows 1 server to be deployed. Customer will receive a printed license entitlement certificate via physical shipment. The license entitlement certificate must be redeemed online or via fax in order to obtain the license activation key(s). Includes one year of 24 x 7 HP Software Technical Support Service.	
	NOTE: For additional license kits including electronic delivery options, please see the Rapid Deployment Software QuickSpecs at: http://h18000.www1.hp.com/products/quickspecs/11053_div/11053_div.html	
Graphic Cards	HP Nvidia Quadro FX1700 512 MB PCI-E 16x Kit	490646-B21
	HP Nvidia FX3700 512 MB PCI-E 16x Kit	490062-B21
Hot Plug HDD Backplane Option	Hot Plug HDD Backplane 1U 2S Kit	445985-B21
	NOTE: Installation of the Hot Plug Backplane 1U 2S Kit (445985-B21) is required if ordering third or fourth Hard Drives for Hot Plug models only.	
Storage Controllers	NOTE: The addition of storage controllers for internal hard drive use is intended for use ONLY with the Hot Plug SATA/SAS Model Chassis (P/N 445193-B21).	
	SAS Controllers	
	Smart Array E200 Controller	
	HP Smart Array E200/128 BBWC Controller	411508-B21
	Smart Array E500 Controller	
	HP Smart Array E500/256MB Controller	435129-B21
	NOTE: Standard RAID 0,1, 1+0.	
	NOTE: Customers can only order one Smart Array E500/256MB Controller and one Battery-backed write cache upgrade (P/N 383280-B21) for the HP ProLiant DL160 G5 server based on battery space.	
	Smart Array P400 Controller	
	HP Smart Array P400/256 Controller	405132-B21
	NOTE: Customers can only order one Smart Array P400/256MB Controller and one Battery-backed write cache upgrade (P/N 383280-B21) for the HP ProLiant DL160 G5 server based on battery space.	

Additional Options

HP Smart Array P400/512 Controller with BBWC NOTE: Customers can only order one Smart Array P400/512MB BBWC Controllers for the HP ProLiant DL160 G5 server based on battery space.	411064-B21
Smart Array P800 Controller	
HP Smart Array P800/512 BBWC Controller	381513-B21
Optional Upgrades	
Battery-backed write cache upgrade NOTE: When installing a battery-backed write cache module, the HP Smart Array E500 must be installed in the full-length PCI slot. This 256MB Battery-backed write cache upgrade for RAID 5 support.	383280-B21
512MB Battery-backed write cache upgrade NOTE: Contains batter and memory module. For Smart Array P400 Controller.	405148-B21
Riser Board Kits	
HP PCI-X Riser Board Kit NOTE: Replaces the standard Full Height PCI Express slot with a Full Height PCI-X slot.	445986-B21
HP PCI-X L/P Riser Kit NOTE: Replaces the standard Half Height (LP) PCI Express slot with a Half Height (LowProfile) PCI-X slot.	452698-B21
NOTE: Please see the QuickSpecs for Technical Specifications and additional information: http://h18000.www1.hp.com/products/quickspecs/12460_div/12460_div.html (Smart Array E200 Controller) http://h18000.www1.hp.com/products/quickspecs/12700_div/12700_div.html (Smart Array E500 Controller) http://h18000.www1.hp.com/products/quickspecs/12400_div/12400_div.html (Smart Array P400 Controller) http://h18000.www1.hp.com/products/quickspecs/12616_div/12616_div.html (Smart Array P800 Controller)	
SAS HBA	
HP 8 Internal Port SAS HBA with RAID NOTE: For use with Hot Plug SAS/SATA models. NOTE: The selection HP 8 Internal Port SAS HBA with RAID requires the purchase of the LowProfile PCI-X Riser Option kit (P/N 452698-B21) NOTE: Transfer rate: 1.5 Gb/s SATA, 3 Gb/s SAS.	347786-B21
HP SC44Ge Host Bus Adapter NOTE: PCI-Express SAS HBA. NOTE: When using the SC44Ge with SATA Hard Drives, 1.5G SATA Hard Drives are required. Transfer rate: 1.5 Gb/s SATA, 3 Gb/s SAS.	416096-B21
NOTE: Please see the QuickSpecs for Technical Specifications and additional information: http://h18004.www1.hp.com/products/quickspecs/12332_div/12332_div.html (8 Internal Port SAS HBA) http://h18004.www1.hp.com/products/quickspecs/12617_div/12617_div.html (SC44Ge HBA)	
SCSI HBA	
HP SC11Xe Host Bus Adapter NOTE: Recommended HBA for SCSI tape drive connect.	412911-B21

NOTE: Please see the QuickSpecs for Technical Specifications and additional information:
http://h18000.www1.hp.com/products/quickspecs/12566_div/12566_div.html
(SC11Xe HBA)

HPC Specific Options	HP IB 4X DDR PCI-e Dual Port 0 Memory HCA	483513-B21
	HP IB 4X DDR Conn-X PCI-e G2 Dual Port HCA	483514-B21
	HP IB 4X DDR PCI-e Dual Port HCA	409376-B21
	HP IB 4X DDR PCI-e DUAL PORT HCA	448397-B21
	HP 10 GbE PCI-e G2 Dual Port NIC	516937-B21
	NOTE: Please see the QuickSpecs for Technical Specifications and additional information: www.hp.com/go/ProLiantNICs	
	NOTE: For HPC interconnect adapters please see the HPC Interconnect section of this QuickSpecs.	

Tape Storage	NOTE: For the complete listing of Tape Drive offerings, please see: http://www.hp.com/products1/storage/compatibility/tapebackup/ISS/index.html	
	Tape Drives	
	USB Rack-Mount Tape Drives	
	HP StorageWorks 1U USB Rack-Mount Kit with one DAT 160 USB Tape Drive NOTE: Pre-configured with one DAT 160 USB tape drive.	AG703A
	SAS Rack-Mount Tape Drives NOTE: HP recommends purchasing the HP SC44Ge HBA (416096-B21) for a dedicated SAS HBA for tape.	
	HP StorageWorks 1U SAS Rack-Mount Kit with one LTO-4 Ultrium 1760 NOTE: Pre-configured with one LTO-4 Ultrium 1760 SAS tape drive.	EH946A
	HP StorageWorks 1U SAS Rack-Mount Kit NOTE: Supports up to (2) half-height SAS tape drives.	AE459A
	HP StorageWorks DAT 160 SAS Internal Tape Drive NOTE: Mounts inside the 1U SAS Rack-Mount Kit (AE459A)	Q1587A
	HP StorageWorks LTO-2 Ultrium 448 SAS Internal Tape Drive NOTE: Mounts inside the 1U SAS Rack-Mount Kit (AE459A)	DW085A
	HP StorageWorks LTO-3 Ultrium 920 SAS Internal Tape Drive NOTE: Mounts inside the 1U SAS Rack-Mount Kit (AE459A)	EH847A
	SCSI Rack-Mount Tape Solutions NOTE: SCSI Controller required. HP recommends purchasing the HP SC11Xe HBA (412911-B21) for a dedicated SCSI HBA for tape.	
	HP StorageWorks 1U SCSI Rack-mount kit with one LTO-2 Ultrium 448 SCSI Tape Drive (Carbonite) NOTE: Pre-configured with one LTO-2 Ultrium 448 SCSI tape drive.	DW028B
	HP StorageWorks 1U SCSI Rack-mount kit with one LTO-3 Ultrium 920 NOTE: Pre-configured with one LTO-3 Ultrium 920 SCSI tape drive.	EH903A
	HP StorageWorks 3U SCSI Rack-Mount with 1 LTO-4 Ultrium 1840 Tape Drive NOTE: Pre-configured with one LTO-4 Ultrium 1840 SCSI tape drive.	EH926A

For an up-to-date listing of the latest O/S and software support details for HP Ultrium tape drives, please visit: http://www.hp.com/go/connect

Tape Autoloaders

HP StorageWorks DAT Autoloader

HP StorageWorks DAT 72x10 tape autoloader	AE313B

HP StorageWorks 1/8 G2 Tape Autoloader

HP StorageWorks 1/8 G2 LTO-4 Ultrium 1760 SAS Tape Autoloader	AK377A
HP StorageWorks 1/8 G2 LTO-3 Ultrium 920 SAS Autoloader	AH558A
HP StorageWorks 1/8 G2 LTO-2 Ultrium 448 Tape Autoloader	AH164A
HP StorageWorks 1/8 G2 Tape Autoloader Rack Kit	AH166A

NOTE: Required to install the 1/8 G2 Autoloaders in a standard 19-inch rack; includes rails and rackmount instructions.

NOTE: Please see the QuickSpecs for Technical Specifications and additional information: http://www.hp.com/go/automation needed to create a complete solution; reference current compatibility information at: http://www.hp.com/go/ebs.

Tape Libraries

HP StorageWorks MSL2024 Tape Library

HP StorageWorks MSL2024 1 LTO-4 Ultrium 1840 SCSI Drive Library	AJ033A
HP StorageWorks MSL2024 1 LTO-4 Ultrium 1760 SAS Drive Library	AK378A
HP StorageWorks MSL2024 1 LTO-3 Ultrium 960 SCSI Drive Library	AG115A
HP StorageWorks MSL2024 1 LTO-3 Ultrium 920 SAS Drive Library	AH559A
HP StorageWorks MSL2024 1 LTO-2 Ultrium 448 SCSI Drive Library	AG116A

HP StorageWorks MSL4048 Tape Library

HP StorageWorks MSL4048 1 Ultrium 920 SAS Drive Library	AH560A
HP StorageWorks MSL4048 1 Ultrium 960 SCSI Drive Library	AG322A
HP StorageWorks MSL4048 2 LTO-4 Ultrium 1760 SAS Drive Library	AK380A
HP StorageWorks MSL4048 1 LTO-4 Ultrium 1840 SCSI Drive Library	AJ035A

NOTE: Please see the QuickSpecs for Technical Specifications and additional information: http://www.hp.com/go/automation needed to create a complete solution; reference current compatibility information at: http://www.hp.com/go/ebs.

Additional Options

Disk-Based Backup	RDX Removable Disk Backup	
	HP StorageWorks RDX160 External Removable Disk Backup System NOTE: 160GB of Disk Storage	AJ766A
	HP StorageWorks RDX320 External Removable Disk Backup System NOTE: 320GB of Disk Storage	AJ768A
	HP StorageWorks RDX500 External Removable Disk Backup System NOTE: 500GB of Disk Storage	AJ935A
	NOTE: Please see the QuickSpecs for Technical Specifications and additional information: http://h18000.www1.hp.com/products/quickspecs/13036_div/13036_div.html	
	D2D Backup	
	HP StorageWorks D2D120 Backup System with Data Protector Express Software Kit NOTE: 2TB of Disk Storage	EH924A
	HP StorageWorks D2D130 Backup System with LTO-3 Ultrium 920 SAS Tape Drive NOTE: 3TB of Disk Storage.	EH952A
	HP StorageWorks D2D2503i Backup System NOTE: 3TB of Disk Storage.	EH945A
	HP StorageWorks D2D2504i Backup System	EJ002A
	HP StorageWorks D2D4004i Backup System	EH938A
	NOTE: Please see the QuickSpecs for Technical Specifications and additional information: http://h18000.www1.hp.com/products/quickspecs/12651_div/12651_div.html (Worldwide)	
StorageWorks Options	StorageWorks Fibre Channel HBA	
	NOTE: The following is a list of all Fibre Channel Host Bus Adapters for Windows and Linux. For detailed compatibility information please see: http://h18006.www1.hp.com/storage/saninfrastructure/hba.html	
	Brocade Fibre Channel HBAs	
	HP 81B PCIe 8Gb FC Single Port HBA	AP769A
	HP 82B PCIe 8Gb FC Dual Port HBA	AP770A
	HP 41B PCIe 4Gb FC Single Port HBA	AP767A
	HP 42B PCIe 4Gb FC Dual Port HBA	AP768A
	Emulex Fibre Channel HBAs	
	HP StorageWorks 81E 8Gb SP PCI-e FC HBA	AJ762A
	HP 82E 8Gb Dual-port PCI-e FC HBA	AJ763A
	HP StorageWorks FC2142SR 4Gb PCI-e HBA	A8002A
	HP StorageWorks FC2242SR Dual Channel 4 Gb PCI-e HBA	A8003A
	QLogic Fibre Channel HBAs	
	HP StorageWorks 81Q PCI-e FC HBA	AK344A
	HP 82Q 8Gb Dual Port PCI-e FC HBA	AJ764A
	HP StorageWorks FC1142SR 4Gb PCI-e HBA	AE311A
	HP StorageWorks FC1242SR Dual Channel 4 Gb PCI-e HBA	AE312A

	StorageWorks SCSI HBA	
	HP U320e SCSI Host Bus Adapter	AH627A
	NOTE: Recommended HBA for MSL SCSI Tape Library connect.	
	HP StorageWorks FC2243 4Gb PCI-X 2.0 DC HBA	AD168A
HP StorageWorks Modular Smart Array	**HP StorageWorks 50 Modular Smart Array**	
	HP StorageWorks 50 Modular Smart Array	364430-B21
	NOTE: Rack-mountable 10 SFF drive enclosure with single I/O module, redundant hot plug power supplies and hot plug fans. NOTE: Please see the QuickSpecs for Technical Specifications and additional information: http://h18000.www1.hp.com/products/quickspecs/12245_div/12245_div.html (Worldwide)	
	HP StorageWorks 60 Modular Smart Array	
	HP StorageWorks 60 Modular Smart Array	418408-B21
	NOTE: Rack-mountable 12-drive (3.5" 3G SAS/1.5G SATA) 2U enclosure with 3Gb/s SAS host connectivity and redundant power supplies. NOTE: Please see the QuickSpecs for Technical Specifications and additional information: http://h18000.www1.hp.com/products/quickspecs/12627_div/12627_div.html (Worldwide)	
	HP StorageWorks 70 Modular Smart Array	
	HP StorageWorks 70 Modular Smart Array	418800-B21
	NOTE: Rack-mountable 25-drive (2.5" 3G SAS/1.5G SATA) 2U enclosure with 3Gb/s SAS host connectivity and redundant power supplies. NOTE: Please see the QuickSpecs for Technical Specifications and additional information: http://h18000.www1.hp.com/products/quickspecs/12652_div/12652_div.html (Worldwide)	
Uninterruptible Power Systems	**HP Rack-mountable UPS**	
	HP UPS R1500 G2 UPS	
	HP, R1.5k VA UPS, 1U,NA	AF419A
	HP, R1.5kVA UPS, 1U, INTL	AF418A
	HP, R1.5kVA UPS, 1U, JPN/TW	AF421A
	NOTE: Please see the QuickSpecs for Technical Specifications and additional information: http://h18000.www1.hp.com/products/quickspecs/13130_div/13130_div.html (Worldwide)	
	NOTE: Please see the QuickSpecs for Technical Specifications and additional information: http://h18000.www1.hp.com/products/quickspecs/13129_div/13129_div.html (Worlwide)	
	NOTE: For additional information on HP Uninterruptable Power Systems please go to: www.hp.com/servers/rackups.	

HP Rack Series	**HP Rack 10000 G2 Series** (Carbon/Graphite Metallic)	
	10642 G2 (42U) Rack Cabinet 1200mm Deep - Shock Pallet	AF034A
	10642 G2 (42U) Rack Cabinet 1200mm Deep - Pallet	AF038A
	10647 G2 (47U) Rack Cabinet 1200mm Deep - Shock Pallet	AF044A
	10647 G2 (47U) Rack Cabinet 1200mm Deep - Pallet	AF045A
	NOTE: It is mandatory to use a shock pallet when shipping racks with equipment installed.	
	NOTE: Please see the Rack 10000 G2 QuickSpecs for Technical Specifications such as height, width, depth, weight, and color: http://h18000.www1.hp.com/products/quickspecs/12402_div/12402_div.html (Worldwide)	
	NOTE: For additional information regarding Rack Cabinets, please see the following URL: http://www.hp.com/go/rackandpower.	
HP Rack Options	**HP KVM Switch Options**	
	2x1x16 IP Console Switch with Virtual Media	AF601A
	4x1x16 IP Console Switch with Virtual Media	AF602A
	2x16 Server Console Switch with Virtual Media	AF600A
	PS/2 Virtual Media Interface Adapter, 1 pack	AF604A
	NOTE: Requires PS/2 and one USB port on server.	
	HP Server Console Switch (KVM), 0 x 2 x 8 port	AF616A
	HP Server Console Switch (KVM), 0 x 2 x 16 port	AF617A
	PS/2 Interface Adapter, 1 pack	262588-B21
	PS/2 Interface Adapter, 8 pack	262587-B21
	HP 1x4 Console Switch	AF611A
	HP PS2 Server Console Cable, 6 foot, 2-Pack	AF612A
	HP USB Server Console Cable, 6 foot, 2-Pack	AF613A
	NOTE: required for supporting USB peripherals.	
	NOTE: Cat5e cables are required to connect Interface Adapters to Console Switches. Cat5e cables can be found at the following URL: http://www.hp.com/go/kvm.	
	HP Serial Console Server Options	
	HP 16 Port Serial Console Server (worldwide)	AF101A
	HP 48 Port Serial Console Server (worldwide)	AF102A
	Serial Adapter, RJ45-D89 DCE Female, 1-pack	AF103A
	Serial Adapter, RJ45-D89 DCE Female, 8-pack	AF110A
	NOTE: For additional information regarding KVM switches, Serial Console servers, rack mount monitors, keyboards and all related options please see the following URL: http://www.hp.com/go/kvm.	

Additional Options

USB Options	HP 1GB USB 2.0 Floppy Drive Key	442085-B21
	USB 1.44-MB External Diskette Drive	DC141B
	USB Floppy Drive	DC361B
	HP USB-P/S2 Mouse	DC369A
	HP Keyboard (USB) standard 2004	DT528A#xxx
	HP USB Internal Cable Kit	451363-B21
Service and Support Offerings (HP Care Pack Services)	Hardware Services 4-Hour On-site Service	
	13-Hour x 5-Day Coverage, 3 Years, Electronic	U9509E
	24-Hour x 7 Day Coverage, 3 Years, Electronic	U9510E
	Hardware Services Next Business Day On-Site Service	
	9-Hour x 5-Day Coverage, 3 Years, Electronic	U9508E
	Hardware Services 6-Hour Call to Repair On-Site Service	
	Hardware Installation, Electronic	U9520E
	NOTE: For more information, customer/resellers can contact: http://www.hp.com/services/carepack	

Memory

HP ProLiant DL160 G5 (all models)

NOTE: Memory configurations listed do not apply to "Factory Integrated Models".

Standard Memory

1GB (2x512MB) or 2GB (2 x 1GB) depending on model, PC2-5300 Fully Buffered DIMM memory, with Advanced ECC.

Maximum Memory

Up to 32GB memory is available with the optional installation of PC2-5300 Fully Buffered DIMM memory kits.

NOTE: Memory should be installed in pairs and matched for optimum performance.

NOTE: Chart does not represent all possible memory configurations.

Memory	Slot							
	1	2	3	4	5	6	7	8
Standard (1 GB)	512 MB	Empty	512 MB	Empty	Empty	Empty	Empty	Empty
Standard (2 GB)	1 GB	Empty	1 GB	Empty	Empty	Empty	Empty	Empty
Maximum (64GB)	8 GB	8 GB	8 GB	8 GB	8 GB	8 GB	8 GB	8 GB

Following are memory options available from HP:

1 GB FBD PC2-5300 2 X 512 MB Kit	397409-B21
2 GB FBD PC2-5300 2 X 1 GB Kit	397411-B21
4 GB FBD PC2-5300 2 X 2 GB Kit	397413-B21
8 GB FBD PC2-5300 2 X 4 GB Kit	397415-B21
Dual Rank	
4 GB FBD PC2-6400 2 X 2 GB Dual Rank Kit	484060-B21
8 GB FBD PC2-6400 2 x 4 GB Dual Rank Kit	484062-B21
16 GB FBD PC2-5300 2 x 8 GB Dual Rank Kit	413015-B21
64 GB FBD PC2-5300 8 x 8 GB Dual Rank Kit	495604-B21
Low Power	
2 GB FBD PC2-5300 2 X 1 GB Low Power Kit	461826-B21
4 GB FBD PC2-5300 2 x 2 GB Low Power Kit	461828-B21
8 GB FBD PC2-5300 2 x 4 GB Low Power Kit	466440-B21



1-4 Four Non-hot plug SATA or four 3.5" Hot-plug SAS/SATA hard drive bays

A Optional DVD-ROM, or DVD/CD RW

Drive Support

Removable Media

	Quantity Supported	Position Supported	Controller
DVD-ROM	Up to 1	A	Integrated IDE (ATAPI) (optional)
DVD/CD RW	Up to 1	A	Integrated IDE (ATAPI) (optional)

Hard Drives

NOTE: The components of a storage subsystem (e.g. the drive, the HBA/controller, firmware, and the server backplane) should operate at the same data transfer rate or the system bandwidth will be negotiated down to an acceptable level for all components.

NOTE: Hard drives have either a one year or three year warranty; refer to the specific hard drive QuickSpecs for details.

SATA Non-Hot Plug 3.5" Midline (MDL) Drives

	Quantity Supported	Position Supported	Controller
250GB 3G SATA 7.2K 500GB 3G SATA 7.2K 750GB 3G SATA 7.2K	Up to 4	1-4	HP Embedded SATA RAID Controller NOTE: Transfer rate: 1.5 Gb/s SATA

SATA Non-Hot Plug 3.5" Entry (ETY) Drives

	Quantity Supported	Position Supported	Controller
160GB 3G SATA 7.2K	Up to 4	1-4	HP Embedded SATA RAID Controller NOTE: Transfer rate: 1.5 Gb/s SATA

SATA Non-Hot Plug Drives

	Quantity Supported	Position Supported	Controller
160GB 1.5G SATA 250GB 1.5G SATA 500GB 1.5G SATA, FIO	Up to 4	1-4	HP Embedded SATA RAID Controller NOTE: Transfer rate: 1.5 Gb/s SATA

SATA Hot Plug 3.5" Midline (MDL) Drives

NOTE: Installation of the Hot Plug Backplane 1U 2S Kit (445985-B21) is required if ordering third or fourth Hard Drives for Hot Plug models only.

	Quantity Supported	Position Supported	Controller

Storage

160GB 3G SATA 7.2K 250GB 3G SATA 7.2K 500GB 3G SATA 7.2K 750GB 3G SATA 7.2K 1TB 3G SATA 7.2K	Up to 4	1-4	HP Smart Array P400 Controller HP Smart Array P800 Controller

3.5" SATA Hot Plug

	Quantity Supported	Position Supported	Controller
160GB 1.5G SATA 7.2K 250GB 1.5G SATA 7.2K 500GB 1.5G SATA 7.2K 750GB 1.5G SATA 7.2K	Up to 4	1-4	HP SC40Ge 4-Port Internal SAS HBA with RAID 0, 1 NOTE: When using the SC40Ge with SATA Hard Drives, 1.5G SATA Hard Drives are required. Transfer rate: 1.5 Gb/s SATA, 3 Gb/s SAS HP Smart Array P400 Controller HP Smart Array P800 Controller

SATA Hot Plug 3.5" Midline (MDL) Solid State Drives

	Quantity Supported	Position Supported	Controller
120GB 3G SATA 60GB 3G SATA	Up to 4	1-4	HP SC40Ge 4-Port Internal SAS HBA with RAID 0, 1 NOTE: When using the SC40Ge with SATA Hard Drives, 1.5G SATA Hard Drives are required. Transfer rate: 1.5 Gb/s SATA, 3 Gb/s SAS HP Smart Array P400 Controller HP Smart Array P800 Controller

SATA Non-Hot Plug 3.5" Entry (ETY) Drives

	Quantity Supported	Position Supported	Controller
160GB 3G SATA 7.2K	Up to 4	1-4	HP Embedded SATA RAID Controller NOTE: Transfer rate: 1.5 Gb/s SATA

SAS Hot Plug 3.5"Midline (MDL) Drives

NOTE: Installation of the Hot Plug Backplane 1U 2S Kit (445985-B21) is required if ordering third or fourth Hard Drives for Hot Plug models only.

	Quantity Supported	Position Supported	Controller
1TB 3G SAS 7.2K 750 3G SAS 7.2K	Up to 4	1-4	Embedded SATA with integrated SATA RAID 0,1 HP Smart Array E200/128 BBWC Controller HP Smart Array P400 Controller HP Smart Array E500/256MB Controller HP Smart Array P800 Controller

Storage

SAS Hot Plug 3.5" Enterprise (ENT) Drives

NOTE: Installation of the Hot Plug Backplane 1U 2S Kit (445985-B21) is required if ordering third or fourth Hard Drives for Hot Plug models only.

	Quantity Supported	Position Supported	Controller
600GB 6G SAS 15K 450GB 6G SAS 15K 450GB 3G SAS 15K 300GB 3G SAS 15K 146GB 3G SAS 15K 72GB 3G SAS 15K	Up to 4	1-4	HP SC40Ge 4-Port Internal SAS HBA with RAID 0, 1 NOTE: When using the SC40Ge with SATA Hard Drives, 1.5G SATA Hard Drives are required. Transfer rate: 1.5 Gb/s SATA, 3 Gb/s SAS HP Smart Array P400 Controller HP Smart Array P800 Controller

External Storage

	Quantity Supported	Position Supported	Controller
20 Modular Smart Array	Up to 2 per SA-6402 Up to 4 per SA-6404	External	Smart Array 6402/128 Controller Smart Array 6404/256 Controller Smart Array 642 Controller
50 Modular Smart Array	Up to 2	External	Smart Array 6402/128 Controller Smart Array 6404/256 Controller Smart Array 642 Controller
60 HP StorageWorks Modular Smart Array	Up to 8	External	HP Smart Array P800/512 BBWC Controller
70 HP StorageWorks Modular Smart Array	Up to 8	External	HP Smart Array P800/512 BBWC Controller

Tape and Disk-Based Backup

NOTE: For a complete listing of compatible tape and disk-based backup offerings, please visit: www.hp.com/go/connect

NOTE: SAS Tape Drives: Connecting hard drive cage and SAS tape to the same SAS Controller using split cable (supplied with tape drive) deactivates 1 of the hard drive bays. Actual hard drive bay deactivated depends on where split cable plugs into SAS drive connector. Example: 3x SAS cable connector plugged into SAS drive connector (5-8) on the back of the hard drive cage would mean drive bay 8 is deactivated.

	Position Supported	Controller	Controller/HBA Option Kit Part Number
HP StorageWorks SCSI Tape Drives, External LTO-1 Ultrium 232 LTO-2 Ultrium 448 LTO-3 Ultrium 920 LTO-3 Ultrium 960 LTO4 Ultrium 1760 LTO-4 Ultrium 1840 DAT 40 DAT 72 DAT 160	External	HP SC11Xe Host Bus Adapter	412911-B21

Storage

1U Rack-Mount Kit 3U Rack-Mount Kit			
HP StorageWorks USB Tape Drives, External DAT 40 USB DAT 72 USB DAT 160 USB 1U USB Rack-Mount Kit	External	USB 2.0 Port	N/A
HP StorageWorks SAS Tape Drives, External DAT 160 SAS LTO-2 Ultrium 448 SAS LTO-3 Ultrium 920 SAS LTO-4 Ultrium 1760 SAS LTO-4 Ultrium 1840 SAS 1U Rack-Mount Kit 3U Rack-Mount Kit	External	HP SC44Ge Host Bus Adapter	416096-B21
HP StorageWorks SCSI Tape Automation, External DAT 72x10 Autoloader 1/8 G2 Autoloader MSL2024 MSL4048	External	HP SC11Xe Host Bus Adapter HP U320e SCSI Host Bus Adapter NOTE: Recommended for MSL tape libraries.	412911-B21 AH627A
HP StorageWorks SAS Tape Automation, External 1/8 G2 Autoloader MSL2024 MSL4048	External	HP SC44Ge Host Bus Adapter NOTE: Please visit: http://www.hp.com/go/connect for details about minimum SAS controller firmware version and SAS cabling requirements.	416096-B21
HP StorageWorks Fibre Tape Automation, External MSL2024 MSL4048 MSL8096 MSL6000	External	Please consult the EBS connectivity matrix at: http://www.hp.com/go/ebs for detailed connectivity information.	N/A
HP StorageWorks RDX Removable Disk Backup System, External RDX160 RDX320 RDX500	External	USB 2.0 port	N/A

HP StorageWorks D2D Backup Systems D2D120 D2D130 D2D2503i D2D2504i D2D4004i	External	Embedded Network Controller	N/A

Power Specifications

Operational Input Voltage Range (Vrms)	90Vac to 264Vac full range					
Frequency Range (Nominal) (Hz)	47 Hz to 63 Hz					
Nominal Input Voltage (Vrms)	100	115	200	220	230	240
Max Rated Output Wattage Rating	653.10	653.19	653.08	652.96	653.08	652.96
Nominal Input Current (A rms)	8.55	7.31	4.12	3.77	3.6	3.46
Max Rated Input Wattage Rating (Watts)	855	840.72	824.12	827.5	806.3	805.71
Max. Rated VA (Volt-Amp)	990	990	990	990	990	990
Efficiency (%)	76.39	77.69	79.25	78.91	81	81.04
Power Factor	0.998	0.997	0.983	0.976	0.973	0.969
Leakage Current (mA)	<3.5mA	<3.5mA	<3.5mA	<3.5mA	<3.5mA	<3.5mA
Maximum Inrush Current (A peak)	60A	60A	60A	60A	60A	60A
Maximum Inrush Current Duration (mS)	1mS	1mS	1mS	1mS	1mS	1mS

System Specifications

Power		
ProLiant DL160 G5 Fully Configured	115V/60Hz	220V/50Hz
Fully Loaded System Input Wattage (W)	651	638
Fully Loaded System Input Current (A rms)	5.7	3.0
Fully Loaded System Thermal (BTU- Hr)	2218	2174
Fully Loaded System VA (Volt-Amp)	657	657
System Leakage with all power supplies loaded (mA)	1.58	3.03
System Inrush Current with all power supplies loaded (A)	19	37
Power cord requirements	Nema 5-15P to IEC320-C13	IEC320-C13 to IEC320-C14
NOTE: Power shown is for a fully configured system consisting of (2) CPU, (8) double-sided DIMMs, (2) HDDs, (1) CD-ROM, and (2) PCI cards.		
Power Cord		AF556A

Server Power Cords

One 6' Highline (IEC-IEC) power cord ships standard

NOTE: HP ProLiant DL servers no longer ship standard with NEMA power cords (163719-002) that allow connection to 110V US wall outlets in a home or office. ProLiant DL servers are primarily connected to PDU's in data center racks so they now ship standard with only a PDU power cord (416151-B21). If a user wishes to power a ProLiant DL server using a 110V receptacle (NEMA-15), the NEMA power cord (227099-001) must be ordered separately.

If customers require a local power cord, they can check the power cord matrix for the appropriate cord. Please see the following power cord matrix: http://www.hp.com/go/powercordmatrix.

System Unit	**Dimensions** (H x W x D) (with bezel)	1.70 x 17.64 x 26.85 in (4.32 x 44.80 x 68.20 cm)	
	Weight (approximate)	Maximum (all hard drives, power supplies, and processors installed)	37.00 lb (16.78 kg)
		Minimum (one hard drive, power supply, and processor installed)	30.00 lb (13.69 kg)
	Input Requirements (per power supply)	Rated Line Voltage	90 to 140 VAC 180 to 264 VAC
		Rated Input Current	7.31A at 115VAC 3.6A at 230VAC
		Rated Input Frequency	47 to 63 Hz
		Rated Input Power	855W (at 100 VAC), 840.72W (at 200 VAC)
	Power Specifications	To review typical system power ratings use the Power Advisor which is available via the online tool located at URL: www.hp.com/go/proliant-energy-efficiency - Click on the system of interest. Example: DL160 G5 - Follow the instructions of the next screens.	
	Power Supply Output (per power supply)	Rated Steady-State Power	653.10W (at 100 VAC), 653.08W (at 200 VAC)
	System Inlet Temperature	Operating	50° to 95° F (10° to 35° C) at sea level with an altitude derating of 1.8°F per every 1000 ft (1.0°C per every 305 m) above sea level to a maximum of 10,000 ft (3050 m), no direct sustained sunlight. Maximum rate of change is 18°F/hr (10°C/hr). The upper limit may be limited by the type and number of options installed. System performance may be reduced if operating with a fan fault or above 86°F (30°C).
		Non-operating	40° to 140° F (-40° to 60° C) Maximum rate of change is 36°F/hr (20°C/hr).
	Relative Humidity (non-condensing)	Operating	10% to 85% relative humidity (Rh), 82.4°F (28°C) maximum wet bulb temperature, non-condensing.
		Non-operating	10% to 95% relative humidity (Rh), 101.7°F (38.7°C) maximum wet bulb temperature, non-condensing.
	Altitude	Operating	10,000 ft (3050 m). This value may be limited by the type and number of options installed. Maximum allowable altitude change rate is 1500 ft/min (457 m/min).

		Non-operating	30,000 ft (9144 m). Maximum allowable altitude change rate is 1500 ft/min (457 m/min).
	Acoustic Noise	Listed are the declared A-Weighted sound power levels (L_{WAd}) and declared average bystander position A-Weighted sound pressure levels (L_{pAm}) when the product is operating in a 23°C ambient environment. Noise emissions were measured in accordance with ISO 7779 (ECMA 74) and declared in accordance with ISO 9296 (ECMA 109).	
		Idle	
		L_{WAd}	6.86
		L_{pAm}	52.36dBA
		Operating	
		L_{WAd}	6.89
		L_{pAm}	52.60dBA
	Emissions Classification (EMC)	FCC Rating	Class A
		Normative Standards	CISPR 22; EN55022; EN55024; FCC CFR 47, Pt 15; ICES-003; CNS13438; GB9254; K22;K24; EN 61000-3-2; EN 61000-3-3; EN 60950-1; IEC 60950-1
		NOTE: Product conformance to cited product specifications is based on sample (type) testing, evaluation, or assessment. This product or family of products is eligible to bear the appropriate compliance logos and statements.	

Non-Hot Plug SATA Hard Drives	160-GB 7.2K 458947-B21	**Capacity**	160,041 MB	
		Height	1.028 in (2.61 cm)	
		Width	4.0 in (10.16 cm)	
		Depth	5.787 in (147.0 mm)	
		Interface	SATA ATA	
		Transfer Rate Synchronous (Maximum)	1.5Gb/s	
		Seek Time (typical reads, including settling)	Single Track	0.9 ms
			Average	9.0 ms
			Full-Stroke	17.8 ms
			Rotational Speed	7,200 rpm
		Physical Configuration	Bytes/Sector	512
			Logical Blocks	312,581,808
		Operating Temperature	41° to 131° F (5° to 55° C)	

Technical Specifications

Embedded NC105i PCIe Gigabit Server Adapter	Network Interface	Integrated 10/100/1000BASE-T Transceiver Combines a triple-speed IEEE 802.3TM - Compliant Media Access Controller (MAC) with a triple-speed Ethernet transceiver.
	Data Transfer Method	Compliant to x1 PCIe Specification
	Network Transfer Rate	10Base-T (Half-Duplex) 10 Mb/s 10Base-T (Full-Duplex) 20 Mb/s 100Base-TX (Half-Duplex) 100 Mb/s 100Base-TX (Full-Duplex) 200 Mb/s 1000Base-TX (Half and Full-Duplex) 2000Mb/s
	Connector	RJ-45 connector
	Cable Support	Performs all the physical layer functions for 10BASE-T, 100BASE-T, and 1000BASE-T Ethemet on standard Category 5 UTP

Environment-friendly Products and Approach	End-of-life Management and Recycling	Hewlett-Packard offers end-of-life HP product return, trade-in, and recycling programs in many geographic areas. For trade-in information, please go to: http://www.hp.com/go/green. To recycle your product, please go to: http://www.hp.com/go/green or contact your nearest HP sales office. Products returned to HP will be recycled, recovered or disposed of in a responsible manner. The EU WEEE directive (2002/95/EC) requires manufacturers to provide treatment information for each product type for use by treatment facilities. This information (product disassembly instructions) is posted on the Hewlett Packard web site at: http://www.hp.com/go/green. These instructions may be used by recyclers and other WEEE treatment facilities as well as HP OEM customers who integrate and re-sell HP equipment.

© Copyright 2009 Hewlett-Packard Development Company, L.P.

The information contained herein is subject to change without notice.

Microsoft and Windows NT are US registered trademarks of Microsoft Corporation. Intel, the Intel logo, Xeon and Xeon Inside are trademarks of Intel Corporation in the U.S. and other countries.

The only warranties for HP products and services are set forth in the express warranty statements accompanying such products and services. Nothing herein should be construed as constituting an additional warranty. HP shall not be liable for technical or editorial errors or omissions contained herein.

For hard drives, 1GB = 1 billion bytes. Actual formatted capacity is less.