RETIRED: This document has been officially retired, and the base products listed herein are now considered obsolete and are no longer available for sale. Consequently, the information contained within may no longer be current. This document is provided exclusively for reference and informational purposes.

QuickSpecs

Overview

Hot Plug SAS/SATA or Non-Hot Plug SATA Models

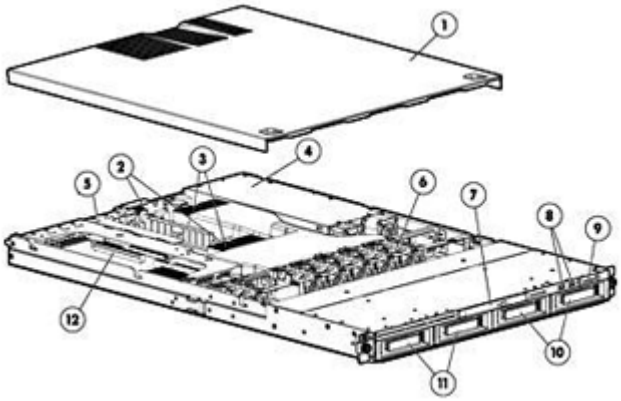

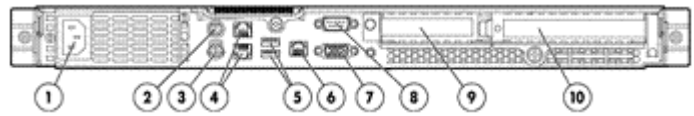

Front View:

1. Access panel
2. Memory banks
3. Two (2) AMD Opteron 2300 series processors
4. Power supply
5. Low-profile PCI-Express or PCI-X slot
6. System fans
7. Optical drive bay
8. Front-panel USB 2.0 ports
9. Power switch/system status LEDs
10. Optional 3rd and 4th 3.5" hot-plug SAS/SATA or non-hot plug SATA hard drive bays
11. Standard 1st and 2nd 3.5" hot-plug SAS/SATA or non-hot plug SATA hard drive bays
12. Full height/full length PCI-Express or HTX slot

Rear View:

1. Power supply cable socket
2. PS/2 mouse port
3. PS/2 keyboard port
4. Two (2) RJ45 GbE LAN ports
5. Rear panel USB 2.0 ports
6. Lights-Out 100 10/100Mbps port
7. Video port
8. Serial port
9. Low-profile riser board assembly slot cover
10. Full-sized riser board assembly slot cover

What's New

- Support for SATA Hot Plug 3.5" Midline (MDL) Solid State Drives
- Support for SAS Hot Plug 3.5" Enterprise (ENT) Hard Drives

At A Glance

Introducing the HP ProLiant DL165G5, now available with the latest high performance Opteron Quad Core processors, increased storage by 2X and a new high efficiency power supply option.

- Processors:
  - Supports up to two AMD Opteron™ 2300 series Quad-Core processors
  - Supports DirectConnect Architecture
  - Supports Power Now
- Memory:
  - 8 DIMM slots supporting up to 32GB REG PC2-6400 DDR2-800 MHz memory with Advanced ECC
  - 8 DIMM slots supporting up to 64GB REG PC2-5300 DDR2-667 MHz memory with Advanced ECC
- Internal Drive Support:

Overview

- Internal storage capacity:
  - SATA Capacity: Support for up to 4.0TB (4 x 1TB) with Hot Plug Model. 3.0TB (4 x 750GB) with Non Hot Plug Model
  - SAS Capacity: Support for up to 4.0 TB (4 x 1TB) with Hot Plug Model
  - NOTE: Installation of the Hot Plug Backplane 1U 2S Kit (445985-B21) is required if ordering third or fourth Hard Drives for Hot Plug models only.

- Network Controller:
  - Embedded NC7782 dual-port gigabit server adapter
- Storage Controllers:
  - Non-Hot Plug SATA Models: HP Embedded SATA Controller
    NOTE: Raid support requires optional slot based raid controller.
  - Hot Plug SATA/SAS Models: HP SC40Ge SAS HBA with RAID 0,1
    NOTE: When using the SC40Ge with SATA Hard Drives, 1.5G SATA Hard Drives are required.
- Expansion Slots:
  - Standard - PCI-Express assembly includes:
    - Slot 1: full-length/full height PCI-Express x16
    - Slot 2: half-length/low-profile PCI-Express x4 (x8 connector)
  - Optional - PCI-X assembly includes:
    - Slot 2: half-length/low-profile PCI-X 133 (note: PCI-X slots are 64 bits; 133 MHz capable)
  - Optional - HTX assembly includes: Slot 1: full-length/full height HTX
- Infrastructure Management:
  - HP ProLiant Lights Out 100i Remote Management support (IPMI 2.0 and SMASH support)
  - Virtual Media plus Virtual KVM support with LO100i Advanced license
  - HP Insight Control for Linux (IC-Linux), a product option, delivers essential infrastructure management that can help save time and money by making it easy to deploy, monitor, control and optimize your IT infrastructure through a single, simple management console. HP Insight Control for Linux supports Linux-based servers and management consoles.
- USB Ports:
  - Up to five USB ports (two front & two rear standard, 1 internal option)
- Optical Drive:
  - Support for one (optional): DVD-ROM, DVD/CD RW
- Power Supply:
  - 650W Power Supply standard (Non-Hot Plug, Autoswitching)
  - 500W High Efficiency Power Supply optional (Non-Hot Plug, Autoswitching)
- Form Factor:
  - Rack (1U)
  - Fixed mounting rails included with all models
- Deployment/Serviceability:
  - Tool-less access to all system components for easy in-rack serviceability
  - Customer Self Repair (CSR): HP products are designed with many CSR parts to minimize repair time and allow for greater flexibility in performing defective parts replacement
- Warranty:
  - This product is covered by a global limited warranty and supported by HP Services and a worldwide network of HP Authorized Channel Partners. Hardware diagnostic support and repair is available for one year from date of purchase. Support for software and initial setup is available for 90 days from date of purchase. Enhancements to warranty services are available through HP Care Pack services or customized service agreements. Hard drives have either a one year or three year warranty; refer to the specific hard drive QuickSpecs for details.
    NOTE: Server Warranty includes 1 year Parts, 1 year Labor, 1-year on-site support with next business day response. Warranty repairs may be accomplished through the use of Customer Self Repair (CSR) parts. These parts fall into two categories: 1) Mandatory CSR parts are designed for easy replacement. A travel and labor charge will result when customers decline to replace a Mandatory CSR part; 2) Optional CSR parts are also designed for easy replacement but may involve added complexity. Customers may choose to have HP replace Optional CSR parts at no charge. Additional information regarding worldwide limited warranty and technical support is available at:

http://h18004.www1.hp.com/products/servers/platforms/warranty/index.html

Standard Features

NOTE: For the Standard Features shipped in the "Factory Integrated Models", please see the "Configuration Information - Factory Integrated Models" section.

Processor One of the following depending on Model	AMD Opteron™ processor Model 2393SE (3.1GHz, 105W ACP) AMD Opteron™ processor Model 2389 (2.9GHz, 75W ACP) AMD Opteron™ processor Model 2384 (2.7GHz, 75W ACP) NOTE: Offered through Configure-To-Order only. See Factory Integrated Models section for more details. AMD Opteron™ processor Model 2381 HE (2.5GHz, 55W ACP) AMD Opteron™ processor Model 2380 (2.5GHz, 75W ACP) HP 2377EE DL165G5/G5p Kit AMD Opteron™ processor Model 23877 EE (2.3GHz, 50W ACP) AMD Opteron™ processor Model 2376 (2.3GHz, 75W ACP) NOTE: Offered through Configure-To-Order only. See Factory Integrated Models section for more details. AMD Opteron™ processor Model 2374HE (2.2GHz, 55W ACP)		
Upgradeability	Upgradeable to two processors		
Chipset	ServerWorks HT2100 and HT1000		
Cache Memory	Model Series 234x to 236x 128K dedicated L1 per core 512K dedicated L2 per core 2MB shared L3 Model Series 237x to 238x 6MB shared L3		
Memory Protection	Advanced ECC		
Memory One of the following depending on Model	Type	REG PC2-6400 DIMMs (DDR2-800) REG PC2-5300 DIMMs (DDR2-667)	
	Standard	2 GB	(2 x 1 GB)
	Maximum	32 GB	(8 x 4 GB)
Network Controller	Embedded NC7782 dual-port gigabit server adapter		

Standard Features

Expansion Slots #	Technology	Bus Width**	Connector Width	Bus Number*	Form Factor	Notes
1	PCI Express	x16	x16	3	Full Height/Full Length	
1	HTX	N/A	N/A	9	Full Height/Full Length	
2	PCI Express	x4	x8	6	Low-profile	
2	PCI-X	64-bit, 133MHz	N/A	2	Low-profile	

* Default bus assignment. Inserting cards with PCI bridges may alter the actual bus assignment number.

** Slots are enumerated differently based on OS. MS OS's enumerate from lowest to highest Device ID by bus (starting with the lowest bus).

Storage Controller	Non-Hot Plug SATA	HP Embedded SATA Controller NOTE: Raid support requires optional slot based raid controller.
	Hot Plug SATA/SAS	HP SC40Ge SAS HBA with RAID 0,1 NOTE: When using the SC40Ge with SATA Hard Drives, 1.5G SATA Hard Drives are required.

NOTE: A diskette drive is needed to install storage controller drivers during a Windows operating system installation from CD.

Storage	Diskette Drives	Via USB only
	Optical Drives	Optional 8x IDE (ATAPI) DVD-ROM drive, slim
		Optional 24x IDE (ATAPI) DVD-ROM/CDRW drive
	Hard Drives	Up to 4 Non-hot plug SATA 3.5" drives
		Up to 4 Hot plug SATA /SAS 3.5" drives

Maximum Internal Storage	Non-Hot Plug SATA	3.0TB	4 x 750GB
	Hot Plug SATA	4.0TB	4 x 1TB
	Hot Plug SAS	4.0TB	4 x 1TB

Interfaces	Parallel	None
	Network RJ-45(Ethernet)	Embedded NC7782 dual-port gigabit server adapter
	Serial	1
	Pointing Device (Mouse)	1
	Graphics	1
	Keyboard	1
	USB	Up to 5 (two front & two rear standard, 1 internal option) NOTE: Please see the following URL for additional information regarding USB support: http://h18004.www1.hp.com/products/servers/platforms/usb-support.html.

Standard Features

Graphics	32MB shared supporting 1600x1200x16M resolution	
Form Factor	Rack (1U), (1.75 in/4.45 cm)	
Remote Management	Lights-Out 100i	HP Lights-Out 100i Remote Management delivers affordable, entry level remote management capabilities for HP ProLiant 100 Series servers with embedded LO100i. It allows customers or their service providers to remotely manage ProLiant 100 Series servers remotely over a LAN or the Internet and consists of the following: • LO100i Standard is embedded remote management and provides basic remote control via telnet, browser, and IPMI 2.0 and SMASH and comes standard on all DL100 series servers except for the DL180 G1 and G5 and the DL120 G5 servers. • LO100i Advanced Pack License are upgrades for all the features of LO100i Select plus Virtual KVM (graphical hardware-based, remote console). NOTE: Flexible and volume quantity (AKA) license kits are available for the Lights-Out 100i Advanced Pack licenses as well as Electronic License To Use (E-LTU). AKA Tracking licenses require a 100 unit minimum forecast at initial contract signing. For these additional part numbers, please refer to each software products. QuickSpecs at this link for more information: www.hp.com/go/lo100
HP Insight Control management software	HP Insight Control for Linux	HP Insight Control for Linux, as a product option, delivers essential infrastructure management that can help save time and money by making it easy to deploy, monitor, remote control, and optimize your IT infrastructure through a single, simple management console. The Insight Control for Linux suite installs and license software modules that are integrated into HP System Insight Manager. The HP Insight Control suite for Linux (IC-Linux) serves environments requiring a Linux-based management consoles. See www.hp.com/go/ic-linux HP Insight Control suites include one year of 24 x 7 HP Software Technical Support and Update Service ensuring rapid access to HP support staff and proactive delivery of software updates. For more information about this service, please visit: http://www.hp.com/services/insight.

Standard Features

Industry Standard Compliance	ACPI V2.0 Compliant PCI 2.2 Compliant PXE Support WOL Support Microsoft® Logo certifications IPMI 2.0 Compliant
Manageability	Embedded HP ProLiant Lights-Out 100i Remote Management, with licensable upgrades to Lights-Out 100i Advanced.
Security	Power-on password Setup password
UPS and PDU Power Cord Matrix	Please see the UPS and PDU cable matrix's on the HP Power Protection and Management page. Under Power Cords, click on the "HP Power Cord Matrix" link. That link will list cable descriptions, requirements, and specifications for UPS and PDU units. Please see the following link: www.hp.com/products/powercords.
Power Supply	650 Watts, auto-switching, PFC (Power Factor Correcting)
System Fans	6 system fans ship standard; non-hot plug, non-redundant
Operating Systems and Virtualization Software Support for ProLiant Servers	Microsoft Windows Server Microsoft Windows Server 2008 Hyper V Red Hat Enterprise Linux (RHEL) SUSE Linux Enterprise Server (SLES) Solaris 10 for x86/x64 based Systems Citrix Essentials for XenServer (Retail) NOTE: For more information on HP's Certified and Supported ProLiant Servers for OS and Virtualization Software and latest listing of software drivers available for your server, please visit our Support Matrix at: http://www.hp.com/go/supportos and our driver download page http://www.hp.com/support/DL165G5.

Standard Features

Rack Airflow Requirements	Rack 10000 G2 series Cabinets The increasing power of new high-performance processor technology requires increased cooling efficiency for rack-mounted servers. The 10000 G2 Series Racks provide enhanced airflow for maximum cooling, allowing these racks to be fully loaded with servers using the latest processors. CAUTION: If a third-party rack is used, observe the following additional requirements to ensure adequate airflow and to prevent damage to the equipment: Front and rear doors: If your 42U server rack includes closing front and rear doors, you must allow 5,350 sq cm (830 square inches) of hole evenly distributed from top to bottom to permit adequate airflow (equivalent to the required 64 percent open area for ventilation). Side: The clearance between the installed rack component and the side panels of the rack must be a minimum of 7 cm (2.75 inches) CAUTION: Always use blanking panels to fill all remaining empty front panel U-spaces in the rack. This arrangement ensures proper airflow. Using a rack without blanking panels results in improper cooling that can lead to thermal damage.
Rack Support	The DL Fixed Rail System supports installation in racks with square or round mounting holes (including Compaq/HP 7000, 9000, 10000 and HP series), with an adjustment range of 24" - 36".
Telco Rack Kit	Installation into Telco 2 post, and 4 post, or threaded holes racks requires a 3rd party option kit. For additional information, please visit: www.hp.com/go/rackandpower.
HP Factory Express Capability	HP Factory Express offers configuration, customization, integration and deployment services for HP servers and storage products. Customers can choose how their factory solutions are built, tested, integrated, shipped and deployed. Factory Express offers service packages for simple configuration, racking, installation, complex configuration and design services as well as individual factory services, such as image loading, asset tagging, and custom packaging. HP products supported through Factory Express include a wide array of servers and storage: HP Integrity, HP ProLiant, HP ProLiant Server Blades, HP BladeSystem, HP 9000 servers as well as the MSAxxxx, VA7xxx, EVA, XP, rackable tape libraries and configurable network switches. For more information on Factory Express services for your specific server model please contact your sales representative or go to http://www.hp.com/go/factory-express.
HP Enterprise Configurator	The HP eConfigure Enterprise Configurator now provides factory default racking for our HP hardware portfolio. This approach is aligned with our strategic direction to meet the needs and expectations of our valued customers. If you require "custom" rack configuration, please contact HP's Customer Business Center or an Authorized Partner for assistance.

Standard Features

Service and Support

HP Care Pack Services provide total care and support expertise with committed response designed to meet your IT and business needs.

HP Care Pack services include coverage for the HP branded hardware options qualified for the server that are purchased at the same time or afterward and internal to the enclosure. It also includes the 22" and smaller external monitors and tower UPS options up to 3kVA. These items will be covered at the same service level and for the same coverage period as the server. Coverage of UPS Battery is not included and standard warranty terms & conditions apply. For servers or storage systems installed within a rack, service also covers all HP qualified rack options installed within the same rack.

To fully capitalize on your HP ProLiant servers' capabilities requires a service partner who thoroughly understands your server technology and systems environment. HP Services, an industry leader in provision of multi vender support solutions provides a range of support services designed to meet the varying needs of business. Whether an SMB or large global corporation HP has a ProLiant server support offer to help you speedily deploy and maximize system uptime.

Recommended Service - Simplify ProLiant solution implementation, maintenance and management.

- Support Service - 3-Year 24x7 4 hr Response service support coverage
- Deployment Service - Hardware Installation

Enhanced Service - Optimize service level to increase IT performance and availability

- Support Service - 3-Year 24x7 24 hr Call to repair service support coverage
- Support Service - 3-Year 24x7 6 hr Call to repair service support coverage
- Support Plus - 24x7 4 hr Response service support including OS coverage

Installation & Start-Up of a ProLiant server and Microsoft or Linux O/S per the Customer Description and/or Data Sheet. To be delivered on a scheduled basis 8am-5pm, M-F, excl. HP holidays.
For a complete listing of service offerings and information visit:
http://www.hp.com/services/proliantservices
http://h20219.www2.hp.com/services/us/en/warranty/carepack-servers-proliant.html

HPC Interconnects

NOTE: High Performance Computing (HPC) interconnect technologies are available for the DL165 G5 under the Cluster Platform product portfolio. These high-speed interconnects are fully supported by HP when they are part of these configure to order clusters. Solutions can be defined with a lot of flexibility with the help of configuration tools. Please visit the following URL to configure HPC Clusters with InfiniBand, Gigabit Ethernet or Myrinet Interconnects: http://www.hp.com/techservers/clusters/ucp/index.html

HPC Interconnects	InfiniBand	PCI-X and PCI-Express adapters
	Gigabit Ethernet	Use embedded ports or optional 10GbE NICs
	Myrinet XP	PCI-X Rev D, Rev E and Rev F adapters

Non-Hot Plug Serial ATA (SATA) Models

HP DL165G5 2374HE 2.2 GHz, 2GB, Non-Hot Plug SATA (1P) 507554-xx1	Processor(s) One of the following depending on model	(1) AMD Opteron™ processor Model 2374HE (2.2 GHz, 55W ACP) (1) AMD Opteron™ processor Model 2352 (2.1 GHz,75W ACP) (1) AMD Opteron™ processor Model 2356 (2.3 GHz, 75W ACP)
	Cache Memory	2MB shared Level 3 cache
HP DL165 G5 2346HE 1.8GHz, 2GB, Non-Hot Plug SATA (1P) 464207-xx1	Memory One of the following depending on model	2GB (2 x 1GB) Registered PC2-5300 Low Power DDR2 DIMMs (667MHz) with Advanced ECC capabilities 2GB (2 x 1GB) Registered PC2-5300 DDR2 DIMMs (667MHz) with Advanced ECC capabilities 4GB (2 x 2GB) Registered PC2-5300 DDR2 DIMMs (667MHz) with Advanced ECC capabilities
HP DL165 G5 2352 2.1 GHz, 2GB, Non-Hot Plug SATA (1P) 445153-xx1	Network Controller	Embedded NC7782 dual-port gigabit server adapter
	Storage Controller	HP Embedded SATA Controller
	Hard Drive	(1) 160GB NHP SATA HDD
HP DL165G5 2356 2.3GHz, 4GB, Non-Hot Plug (1P) 445161-xx1	Internal Storage	SATA: 3TB maximum
	Optical Drive	Optional DVD-ROM, DVD/CD RW
	Form Factor	Rack (1U)

Hot Plug Serial ATA (SATA)/Serial Attached SCSI (SAS) Models

HP DL165G5 2380 2.5 GHz, 4GB, Hot Plug (1P) 507555-xx1	Processor(s) One of the following depending on model	(1) AMD Opteron™ processor Model 2380 (2.5 GHz, 75W ACP) (1) AMD Opteron™ processor Model 2346HE (1.8 GHz, 55W ACP) (1) AMD Opteron™ processor Model 2352 (2.1 GHz,75W ACP) (1) AMD Opteron™ processor Model 2356 (2.3 GHz, 75W ACP)
HP DL165G5 2346HE 1.8 GHz, 2GB, Hot Plug (1P) 464208-xx1	Cache Memory	2MB shared Level 3 cache (Processor Series 234x to 236x) 6MB shared Level 3 cache (Processor Series 237x to 238x)
	Memory One of the following depending on model	2 GB (2 x 1GB) Registered PC2-5300 DDR2 DIMMs (667MHz) with Advanced ECC capabilities 4GB (2 x 2GB) Registered PC2-5300 DDR2 DIMMs (667MHz) with Advanced ECC capabilities 4GB (2 x 2GB) Registered PC2-6400 DDR2 DIMMs (800MHz) with Advanced ECC capabilities
HP DL165 G5 2352 2.1 GHz, 2 GB Hot Plug SAS/SATA (1P) 445164-xx1	Network Controller	Embedded NC7782 dual-port gigabit server adapter
	Storage Controller	HP 4 Internal Port SAS HBA with RAID
HP DL165G5 2356 2.3 GHz, 4 GB, Hot Plug (1P) 445162-xx1	Hard Drive	None ship standard (up to 4 Hot Plug SATA or SAS drives supported)
	Internal Storage One of the following depending on model	SATA: 4.0TB Maximum SAS: 4.0TB Maximum
	Optical Drive	Optional DVD-ROM, DVD/CD RW
	Form Factor	Rack (1U)

Models

Country Code Key	xx = 00	U.S.
	xx = 20	Brazil (Model 445164-201 only)
	xx = 29	Japan
	xx = 37	APD
	xx = 42	Euro
	xx = AA	PRC

NOTE: This section lists some of the steps required to configure a Factory Integrated Model. To ensure only valid configurations are ordered, HP recommends the use of an HP approved configurator. Contact your local sales representative for information on CTO product offerings and requirements.
NOTE: HP does not allow factory integration of options into standard models listed above. Configure-to-order servers must start with a CTO Chassis.
NOTE: FIO indicates that this option is only available as a Factory Installable Option.

Step 1: Base Configuration

	Non-Hot Plug SATA Model	
	HP ProLiant DL165 G5 Non-Hot Plug SATA Rack Chassis	445147-B21
	Factory Integrated Model ships with:	
	Embedded NC7782 dual-port gigabit server adapter	
	Two available PCI-Express slots, including one full-length/full height and one low-profile/half height slot	
	HP embedded SATA controller	
	650 Watt Power Supply	
	6 Fixed, Non-Redundant Fans	
	Rack (1U), (1.75 in / 4.45 cm) Fixed Mounting Rails	
	Hot Plug SATA/SAS Model	
	HP ProLiant DL165 G5 Hot Plug SATA/SAS Rack Chassis	445148-B21
	Factory Integrated Model ships with:	
	Embedded NC7782 dual-port gigabit server adapter	
	One full-length/full height PCI-Express slot. Low-profile/half height slot houses the SATA/SAS storage controller	
	650 Watt Power Supply	
	6 Fixed, Non-Redundant Fans	
	Rack (1U), (1.75 in / 4.45 cm) Fixed Mounting Rails	

Step 2: Choose Required Options (only one of the following from each list unless otherwise noted)

Processors	AMD Opteron™ processor Model 2393SE (3.1GHz, 105W ACP), FIO	500062-L21
	AMD Opteron™ processor Model 2389 (2.9GHz, 75W ACP), FIO	500049-L21
	AMD Opteron™ processor Model 2384 (2.7GHz, 75W ACP), FIO	500064-L21
	AMD Opteron™ processor Model 2381 HE (2.5GHz, 55W ACP), FIO	500058-L21
	AMD Opteron™ processor Model 2380 (2.5GHz, 75W ACP), FIO	500060-L21
	AMD Opteron™ processor Model 2377 EE (2.3GHz, 50W ACP), FIO	536530-L21
	AMD Opteron™ processor Model 2376 (2.3GHz, 75W ACP), FIO	500056-L21
	AMD Opteron™ processor Model 2374HE (2.2 GHz, 55W ACP), FIO	500051-L21

Configuration Information - Factory Integrated Models

Memory	NOTE: Processors 2374 HE and above use PC2-6400 memory except for 8GB DIMMs which remain PC2-5300 (408855-B21 and 495605-B21). PC2-5300 memory (except for kits 408855-B21 and 495605-B21) can only be used with processor models 2360 SE and below.	
	1 GB REG PC2-5300 2 x 512 MB Single Rank Kit	408850-B21
	2 GB REG PC2-6400 2 x 1 GB Kit	497763-B21
	2 GB REG PC2-5300 2 x 1 GB Single Rank Kit	408851-B21
	2 GB REG PC2-5300 2 x 1 GB Low Power Single Rank Kit	483399-B21
	4 GB REG PC2-6400 2 x 2 GB Kit	497765-B21
	4 GB REG PC2-5300 2 x 2 GB Low Power Single Rank Kit	483401-B21
	4 GB REG PC2-5300 2 x 2 GB Dual Rank Kit	408853-B21
	8 GB REG PC2-6400 2 x 4 GB Kit	497767-B21
	8 GB REG PC2-6400 2 x 4 GB Low Power Kit	504351-B21
	8 GB REG PC2-5300 2 x 4 GB Dual Rank Kit	408854-B21
	8 GB REG PC2-5300 2 x 4 GB Low Power Dual Rank Kit	483403-B21
	16 GB REG PC2-5300 2 x 8 GB Kit	408855-B21
	64 GB REG PC2-5300 8 x 8 GB Kit	495605-B21
Hard Drive	NOTE: The components of a storage subsystem (e.g. the drive, the HBA/controller, and the server backplane) should operate at the same data transfer rate or the system bandwidth will be negotiated down to an acceptable level for all components. NOTE: Hard drives have either a one year or three year warranty; refer to the specific hard drive QuickSpecs for details.	
	NOTE: Required only if P/N 445147-B21 selected in Step 1.	
	Serial-ATA (SATA) Non-Hot Plug Hard Drives (Non-Hot Plug Models Only)	
	SATA Non-Hot Plug 3.5" Entry (ETY) Drives	
	HP 160GB 3G SATA 7.2K NHP 3.5" ETY HDD	458947-B21
	SATA Non-Hot Plug 3.5" Midline (MDL) Drives	
	HP 750GB 3G SATA 7.2K NHP 3.5" MDL HDD	462595-B21
	HP 500GB 3G SATA 7.2K NHP 3.5" MDL HDD	458941-B21
	HP 250GB 3G SATA 7.2K NHP 3.5" MDL HDD	458939-B21
	3.5" SATA Non-Hot Plug Drives	
	HP 500GB 1.5G SATA 7.2K NHP 3.5" HDD, FIO	404469-B21
	HP 250GB 1.5G SATA 7.2K NHP 3.5" HDD	411276-B21
	HP 160GB 1.5G SATA 7.2K NHP 3.5" HDD	411275-B21
	NOTE: The previous generation of 1.5G SATA drives are still supported.	

Configuration Information - Factory Integrated Models

Storage Controllers	NOTE: Required only if P/N 445148-B21 selected in Step 1.	
	HP Smart Array E500/256MB Controller with Battery, FIO NOTE: Customers can only order one Smart Array E500/256MB Controller and one Battery-backed write cache upgrade (P/N 383280-B21) for the HP ProLiant DL165 G5 server based on battery space.	462105-B21
	HP Smart Array E200/128 BBWC Controller	411508-B21
	HP SC44Ge Host Bus Adapter NOTE: When using the SC44Ge with SATA Hard Drives, 1.5G SATA Hard Drives are required.	416096-B21
	HP SC40Ge 4INT PCIe SAS RAID Half Height HBA, FIO NOTE: When using the SC40Ge with SATA Hard Drives, 1.5G SATA Hard Drives are required.	449363-B21
	Battery-backed write cache upgrade NOTE: RAID 5 support. When installing a battery-backed write cache module, the HP Smart Array E500 must be installed in the full-length PCI slot.	383280-B21

Step 3: Choose Additional Factory Integratable Options

Power Supplies	HP 500W High Efficiency Multi-output Power Supply Kit, FIO NOTE: Selection of the 500W High Efficiency Power Supply Unit will remove the 650 Watt standard power supply.	536928-B21
	HP 1200W High Efficiency Power Supply Kit, FIO NOTE: Selection of the 1200W High Efficiency Power Supply Unit will remove the 650 Watt standard power supply and requires the purchase of Power Supply Backplane (P/N 453652-B21)	453650-B21
	Power Options	
	Power Supply Backplane NOTE: This backplane must be ordered with the high efficiency power supply (P/N 453650-B2).	453652-B21

Step 4: Choose Additional Options for Factory Integration

NOTE: For additional "Core Options" and "Additional Options", please refer to the "Options" sections below.

Core Options

NOTE: Some options may not be available for factory integration. Please contact an HP sales representative for additional information.

Processor	AMD Opteron™ processor Model 2393SE (3.1GHz, 105W ACP)	500062-B21
	AMD Opteron™ processor Model 2389 (2.9GHz, 75W ACP)	500049-B21
	AMD Opteron™ processor Model 2384 (2.7GHz, 75W ACP)	500064-B21
	AMD Opteron™ processor Model 2381 HE (2.5GHz, 55W ACP)	500058-B21
	AMD Opteron™ processor Model 2380 (2.5GHz, 75W ACP)	500060-B21
	AMD Opteron™ processor Model 2377 EE (2.3GHz, 50W ACP)	536530-B21
	AMD Opteron™ processor Model 2376 (2.3GHz, 75W ACP)	500056-B21
	AMD Opteron™ processor Model 2374HE (2.2 GHz, 55W ACP)	500051-B21
	AMD Opteron™ processor Model 2360 SE (2.5GHz, 105W ACP)	445983-B21
	AMD Opteron™ processor Model 2356 (2.3 GHz, 75W ACP)	445981-B21
	AMD Opteron™ processor Model 2354 (2.2 GHz, 75W ACP)	445974-B21
	AMD Opteron™ processor Model 2352 (2.1 GHz, 75W ACP)	445971-B21
	AMD Opteron™ processor Model 2346HE (1.8 GHz, 55W ACP)	464210-B21
	AMD Opteron™ processor Model 2344 HE (1.7 GHz, 55W ACP)	492086-B21
Memory (DIMMs)	NOTE: Processors 2374 HE and above use PC2-6400 memory except for 8GB DIMMs which remain PC2-5300 (408855-B21 and 495605-B21). PC2-5300 memory (except for kits 408855-B21 and 495605-B21) can only be used with processor models 2360 SE and below.	
	1 GB REG PC2-5300 2 x 512 MB Single Rank Kit	408850-B21
	2 GB REG PC2-6400 2 x 1 GB Kit	497763-B21
	2 GB REG PC2-5300 2 x 1 GB Single Rank Kit	408851-B21
	2 GB REG PC2-5300 2 x 1 GB Low Power Single Rank Kit	483399-B21
	4 GB REG PC2-6400 2 x 2 GB Kit	497765-B21
	4 GB REG PC2-5300 2 x2 GB Low Power Single Rank Kit	483401-B21
	4 GB REG PC2-5300 2 x 2 GB Dual Rank Kit	408853-B21
	8 GB REG PC2-6400 2 x 4 GB Kit	497767-B21
	8 GB REG PC2-6400 2 x 4 GB Low Power Kit	504351-B21
	8 GB REG PC2-5300 2 x 4 GB Dual Rank Kit	408854-B21
	8 GB REG PC2-5300 2 x 4 GB Low Power Dual Rank Kit	483403-B21
	16 GB REG PC2-5300 2 x 8 GB Kit	408855-B21
	64 GB REG PC2-5300 8 x 8 GB Kit	495605-B21
Optical Drives	DVD-ROM Drive Optical Drive	447889-B21
	DVD/CD RW Drive Optical Drive	447891-B21
Hard Drives	NOTE: The components of a storage subsystem (e.g. the drive, the HBA/controller, and the server backplane) should operate at the same data transfer rate or the system bandwidth will be negotiated down to an acceptable level for all components.	

NOTE: Hard drives have either a one year or three year warranty; refer to the specific hard drive QuickSpecs for details.

Serial-ATA (SATA) Non-Hot Plug Hard Drives (Non-Hot Plug Models Only)

SATA Non-Hot Plug 3.5" Entry (ETY) Drives

HP 160GB 3G SATA 7.2K NHP 3.5" ETY HDD	458947-B21

SATA Non-Hot Plug 3.5" Midline (MDL) Drives

HP 750GB 3G SATA 7.2K NHP 3.5" MDL HDD	462595-B21
HP 500GB 3G SATA 7.2K NHP 3.5" MDL HDD	458941-B21
HP 250GB 3G SATA 7.2K NHP 3.5" MDL HDD	458939-B21

Serial-ATA (SATA) Hot Plug Hard Drives (SATA/SAS Hot Plug Models Only)

SATA Hot Plug Entry 3.5" (ETY) Drives

HP 160GB 3G SATA 7.2K 3.5" ETY HDD	458945-B21

SATA Hot Plug Midline 3.5" (MDL) Drives

HP 1TB 3G SATA 7.2K 3.5" MDL HDD	454146-B21
HP 750GB 3G SATA 7.2K 3.5" MDL HDD	458930-B21
HP 500GB 3G SATA 7.2K 3.5" MDL HDD	458928-B21
HP 250GB 3G SATA 7.2K 3.5" MDL HDD	458926-B21

NOTE: Please see the QuickSpecs for Technical Specifications and additional information:
http://h18000.www1.hp.com/products/quickspecs/13021_div/13021_div.html (Worldwide).

3.5" SATA Hot Plug Drives

HP 750GB 1.5G SATA 7.2K 3.5" HDD	432341-B21
HP 500GB 1.5G SATA 7.2K 3.5" HDD	395473-B21
HP 250GB 1.5G SATA 7.2K 3.5" HDD	349239-B21
HP 160GB 1.5G SATA 7.2K 3.5" HDD	349238-B21

SATA Hot Plug 3.5" Midline (MDL) Solid State Drives

HP 120GB 3G SATA 3.5in MDL 1y Wty SSD	570763-B21
HP 60GB 3G SATA 3.5in MDL 1y Wty SSD	570761-B21

NOTE: Please see QuickSpecs for Technical Specifications and additional information:
http://h18000.www1.hp.com/products/quickspecs/13415_div/13415_div.html (Worldwide)

3.5" SATA Non-Hot Plug Drives

HP 250GB 1.5G SATA 7.2K NHP 3.5" HDD	411276-B21
HP 160GB 1.5G SATA 7.2K NHP 3.5" HDD	411275-B21

NOTE: The previous generation of 1.5G SATA drives are still supported.
NOTE: Please see the QuickSpecs for Technical Specification and additional information:
http://h18000.www1.hp.com/products/quickspecs/11940_div/11940_div.html (Worldwide)

SAS Hot Plug 3.5" Enterprise (ENT) Drives

HP 600GB 6G SAS 15K 3.5" DP ENT HDD	516828-B21

Core Options

	HP 450GB 6G SAS 15K 3.5" DP ENT HDD	516816-B21
	HP 450GB 3G SAS 15K 3.5" DP ENT	454232-B21
	HDDHP 450GB 3G SAS 15K 3.5" DP ENT HDD	454232-B21
	HP 300GB 6G SAS 15K 3.5" DP ENT HDD	516814-B21
	HP 300GB 3G SAS 15K 3.5" DP ENT HDD	416127-B21
	HP 146GB 3G SAS 15K 3.5" DP ENT HDD	384854-B21
	SAS Hot Plug 3.5" Midline (MDL) Drives	
	HP 1TB 3G SAS 7.2K 3.5" DP MDL HDD	461137-B21
	HP 750GB 3G SAS 7.2K 3.5" DP MDL HDD	461135-B21
	NOTE: The purchase of SAS HBA or array controller is required.	
	NOTE: Please see the QuickSpecs for Technical Specifications and additional information: http://h18000.www1.hp.com/products/quickspecs/12244_div/12244_div.html (Worldwide)	

Communications	Gigabit Ethernet Adapters	
	HP NC112T PCIe Gigabit Server Adapter	503746-B21
	HP NC360T PCI Express Dual Port Gigabit Server Adapter	412648-B21
	HP NC364T PCI Express Quad Port Gigabit Server Adapter	435508-B21
	HP NC373F PCI Express Multifunction Gigabit Server Adapter	394793-B21
	HP NC373T PCI Express Multifunction Gigabit Server Adapter	394791-B21
	HP NC382T PCI Express Dual Port Multifunction Gigabit Server Adapter	458492-B21
	10 Gigabit Ethernet Adapters	
	HP NC522SFP Dual Port 10GbE Server Adapter	468332-B21
	NOTE: A minimum of two Gigabytes (2 GB) of server memory is required per each NC522SFP adapter.	
	NOTE: Direct Attach Cable (DAC) for copper environments or fiber transceivers and cables for fiber-optic environments must be purchased separately.	
	NOTE: Please see the QuickSpecs for Technical Specifications and additional information: www.hp.com/go/ProLiantNICs	

Additional Options

Remote Management	HP Lights-Out 100i Advanced Pack	
	HP LO100i Advanced Pack, No Media 1-Server License including 1 year of 24x7 Technical Support and Updates	530521-B21
	NOTE: Flexible and volume quantity (AKA) license kits are available for the Lights-Out 100i Advanced Pack licenses as well as Electronic License To Use (E-LTU). AKA Tracking licenses require a 100 unit minimum forecast at initial contract signing. For these additional part numbers, please refer to QuickSpecs at this link for more information: www.hp.com/go/lo100	
HP Insight Software	HP Insight Control for Linux	
	HP Insight Control for Linux, 1-server license, including one year of 24x7 Technical Support and Updates, Electronic	T9084BAE
	HP Insight Control for Linux, No Media, 1-Server license, including one year of 24x7 Technical Support and Updates	464423-B22
	HP Insight Control for Linux, Media pack (DVD) - No licenses included	464422-B22
	NOTE: Media pack DVD contains HP Insight Control for Linux, HP Systems Insight Manager, HP Insight Control power management, HP Insight Control virtual machine management, and an integrated installer. Licenses must be acquired separately NOTE: This Media pack is optional because the latest ISO image and latest updates may be downloaded at no cost from: http://www.hp.com/go/ic-linux (click on Download button).	
	NOTE: Electronic licenses can be used to purchase multiple licenses with a single activation key, and are available in all countries except China and Japan. Customers in China and Japan should order the physical equivalent. NOTE: Customer will receive a license entitlement certificate, which must be redeemed online or via fax in order to obtain the license activation key(s). Includes one year of 24 x 7 HP Software Technical Support Service. NOTE: For additional License Kits, including electronic licensing options, please see the QuickSpecs at: http://h18000.www1.hp.com/products/quickspecs/13019_div/13019_div.html	
	HP Insight Control server deployment	
	HP Insight Control server deployment Electronic License including 1 year 24x7 Technical Support and Updates	T9082AAE
	HP Insight Control server deployment 1-Server License including 1 year 24x7 Technical Support and Updates	452151-B21
	NOTE: Licenses ship without media. The Insight Control Media Kit can be ordered separately, or can be downloaded at: http://www.hp.com/go/insightupdates. NOTE: Electronic licenses can be used to purchase multiple licenses with a single activation key, and is available in all countries except China and Japan. Customers in China and Japan should order the physical equivalent. NOTE: Customer will receive a license entitlement certificate, which must be redeemed online or via fax in order to obtain the license activation key(s). Includes one year of 24 x 7 HP Software Technical Support Service. NOTE: For additional license kits please see the Insight Control QuickSpecs at: http://h18004.www1.hp.com/products/quickspecs/12631_div/12631_div.html	

Additional Options

Graphic Cards	HP NVIDIA Quadro FX3700 512MB PCI-e Kit NOTE: Use Slot 2, PCI-E x16 Full Length Slot.	490062-B21
	HP NVIDIA Quadro FX1700 512MB PCI-e Kit NOTE: Use Slot 2, PCI-E x16 Full Length Slot.	490646-B21
	NOTE: At this time, these graphic cards are supported on Linux and Windows.	
Hot Plug HDD Backplane Option	Hot Plug HDD Backplane 1U 2S Kit NOTE: Installation of the Hot Plug Backplane 1U 2S Kit (445985-B21) is required if ordering third or fourth Hard Drives for Hot Plug models only.	445985-B21
Storage Controllers	NOTE: The addition of storage controllers for internal hard drive use is intended for use ONLY with the Hot Plug SATA/SAS Model Chassis (445148-B21).	
	SAS Controllers	
	Smart Array E200 Controller	
	HP Smart Array E200/128 BBWC Controller	411508-B21
	Smart Array E500 Controller	
	HP Smart Array E500/256MB Controller NOTE: Standard RAID 0,1, 1+0. NOTE: Customers can only order one Smart Array E500/256MB Controller and one Battery-backed write cache upgrade (P/N 383280-B21) for the HP ProLiant DL165 G5 server based on battery space.	435129-B21
	Smart Array P400 Controller	
	HP Smart Array P400/256MB Controller NOTE: Customers can only order one Smart Array P400/256MB Controller and one Battery-backed write cache upgrade (P/N 383280-B21) for the HP ProLiant DL165 G5 server based on battery space.	405132-B21
	HP Smart Array P400/512MB BBWC Controller NOTE: Customers can only order one Smart Array P400/512MB BBWC Controllers for the HP ProLiant DL165 G5 server based on battery space.	411064-B21
	Smart Array P800 Controller	
	HP Smart Array P800/512 BBWC Controller	381513-B21
	NOTE: Please see the following QuickSpecs for Technical Specifications and additional information: http://h18000.www1.hp.com/products/quickspecs/12460_div/12460_div.html (Smart Array E200 Controller) http://h18000.www1.hp.com/products/quickspecs/12700_div/12700_div.html (Smart Array E500 Controller) http://h18000.www1.hp.com/products/quickspecs/12400_div/12400_div.html (Smart Array P400 Controller) http://h18000.www1.hp.com/products/quickspecs/12616_div/12616_div.html (Smart Array P800 Controller)	
	Optional Upgrades	
	Battery-backed write cache upgrade NOTE: Contains battery only. For Smart Array P400 Controller. NOTE: RAID 5 support. When installing a battery-backed write cache module, the HP Smart Array E500 must be installed in the full-length PCI slot.	383280-B21

Additional Options

	512MB Battery-backed write cache upgrade NOTE: Contains battery and memory module. For Smart Array P400 Controller.	405148-B21
	Riser Board Kits	
	HP HTX Riser Board Kit	445987-B21
	HP PCI-X L/P Riser Kit NOTE: Replaces the standard Half Height (LP) PCI Express slot with a Half Height (LowProfile) PCI-X slot.	452698-B21
	SAS HBA	
	HP 8 Internal Port SAS HBA with RAID NOTE: For use with Hot Plug SAS/SATA models. NOTE: The selection HP 8 Internal Port SAS HBA with RAID requires the purchase of the LowProfile PCI-X Riser Option kit (P/N 452698-B21).	347786-B21
	HP SC44Ge Host Bus Adapter NOTE: When using the SC44Ge with SATA Hard Drives, 1.5G SATA Hard Drives are required. NOTE: PCI-Express SAS HBA. NOTE: Please see the following QuickSpecs for Technical Specifications and additional information: http://h18004.www1.hp.com/products/quickspecs/12332_div/12332_div.html (8 Internal Port SAS HBA) http://h18004.www1.hp.com/products/quickspecs/12617_div/12617_div.html (SC44Ge HBA)	416096-B21
	SCSI HBA	
	HP SC11Xe Host Bus Adapter NOTE: Recommended HBA for SCSI tape drive connect. NOTE: Please see the following QuickSpecs for Technical Specifications additional information: http://h18000.www1.hp.com/products/quickspecs/12566_div/12566_div.html (SC11Xe HBA)	412911-B21
HPC Specific Options	HP IB 4X DDR PCI-e Dual Port HCA	448397-B21
	HP IB 4X DDR PCI-e Dual Port 0 Memory HCA	483513-B21
	HP 10 GbE PCI-e G2 Dual Port Adapter	516937-B21
	NOTE: For HPC interconnect adapters please see the HPC Interconnect section of this QuickSpecs.	
Tape Storage	NOTE: For the complete listing of Tape Drive offerings, please see: http://www.hp.com/products1/storage/compatibility/tapebackup/ISS/index.html	
	Tape Drives	
	USB Rack-Mount Tape Solutions	
	DAT 320 USB External Tape Drive	AJ823A
	HP StorageWorks 1U USB Rack-Mount Kit with one DAT 160 USB Tape Drive NOTE: Pre-configured with one DAT 160 USB tape drive.	AG703A

SAS Rack-Mount Tape Solutions

NOTE: HP recommends purchasing the HP SC44Ge HBA (416096-B21) for a dedicated SAS HBA for tape.

DAT 320 WW SAS External Tape Drive	AJ828A
HP StorageWorks 1U SAS Rack-Mount Kit with one LTO-4 Ultrium 1760 NOTE: Pre-configured with one LTO-4 Ultrium 1760 SAS tape drive.	EH946A
HP StorageWorks 1U SAS Rack-Mount Kit NOTE: Supports up to (2) half-height SAS tape drives.	AE459A
HP StorageWorks DAT 160 SAS Internal Tape Drive NOTE: Mounts inside the 1U SAS Rack-Mount Kit (AE459A).	Q1587A
HP StorageWorks LTO-2 Ultrium 448 SAS Internal Tape Drive NOTE: Mounts inside the 1U SAS Rack-Mount Kit (AE459A).	DW085A
HP StorageWorks LTO-3 Ultrium 920 SAS Internal Tape Drive NOTE: Mounts inside the 1U SAS Rack-Mount Kit (AE459A).	EH847A

SCSI Rack-Mount Tape Solutions

NOTE: SCSI Controller required. HP recommends purchasing the HP SC11Xe HBA (412911-B21) for a dedicated SCSI HBA for tape.

HP StorageWorks 1U SCSI Rack-mount kit with one LTO-2 Ultrium 448 SCSI Tape Drive (Carbonite) NOTE: Pre-configured with one LTO-2 Ultrium 448 SCSI tape drive.	DW028B
HP StorageWorks 1U SCSI Rack-mount kit with one LTO-3 Ultrium 920 NOTE: Pre-configured with one LTO-3 Ultrium 920 SCSI tape drive.	EH903A
HP StorageWorks 3U SCSI Rack-Mount with 1 LTO-4 Ultrium 1840 Tape Drive NOTE: Pre-configured with one LTO-4 Ultrium 1840 SCSI tape drive.	EH926A

For an up-to-date listing of the latest O/S and software support details for HP Ultrium tape drives, please visit: http://www.hp.com/go/connect

Tape Autoloaders

HP StorageWorks DAT Autoloader

HP StorageWorks DAT 72x10 tape autoloader	AE313B

HP StorageWorks 1/8 G2 Tape Autoloader

HP StorageWorks 1/8 G2 LTO-4 Ultrium 1760 SAS Tape Autoloader	AK377A
HP StorageWorks 1/8 G2 LTO-3 Ultrium 920 SAS Autoloader	AH558A
HP StorageWorks 1/8 G2 LTO-2 Ultrium 448 Tape Autoloader	AH164A
HP StorageWorks 1/8 G2 Tape Autoloader Rack Kit NOTE: Required to install the 1/8 G2 Autoloaders in a standard 19-inch rack; includes rails and rackmount instructions.	AH166A

NOTE: Please reference the QuickSpecs for Technical Specifications and http://www.hp.com/go/automation for additional information needed to create a complete solution; reference current compatibility information at: http://www.hp.com/go/ebs.

Tape Libraries

HP StorageWorks MSL2024 Tape Library

HP StorageWorks MSL2024 1 LTO-4 Ultrium 1840 SCSI Drive Library	AJ033A
HP StorageWorks MSL2024 1 LTO-4 Ultrium 1760 SAS Drive Library	AK378A
HP StorageWorks MSL2024 1 LTO-3 Ultrium 960 SCSI Drive Library	AG115A

Additional Options

	HP StorageWorks MSL2024 1 LTO-3 Ultrium 920 SAS Drive Library	AH559A
	HP StorageWorks MSL2024 1 LTO-2 Ultrium 448 SCSI Drive Library	AG116A
	HP StorageWorks MSL4048 Tape Library	
	HP StorageWorks MSL4048 1 LTO-4 Ultrium 1840 SCSI Drive Library	AJ035A
	HP StorageWorks MSL4048 2 LTO-4 Ultrium 1760 SAS Drive Library	AK380A
	HP StorageWorks MSL4048 1 LTO-3 Ultrium 960 SCSI Drive Library	AG322A
	HP StorageWorks MSL4048 1 LTO-3 Ultrium 920 SAS Drive Library	AH560A
Disk-Based Backup	**RDX Removable Disk Backup**	
	HP StorageWorks RDX160 External Removable Disk Backup System NOTE: 160GB of Disk Storage	AJ766A
	HP StorageWorks RDX320 External Removable Disk Backup System NOTE: 320GB of Disk Storage	AJ768A
	HP StorageWorks RDX500 External Removable Disk Backup System NOTE: 500GB of Disk Storage	AJ935A
	NOTE: Please see the QuickSpecs for Technical Specifications and additional information: http://h18000.www1.hp.com/products/quickspecs/13036_div/13036_div.html	
	D2D Backup	
	HP StorageWorks D2D120 Backup System with Data Protector Express Software Kit NOTE: 2TB of Disk Storage	EH924A
	HP StorageWorks D2D130 Backup System with LTO-3 Ultrium 920 SAS Tape Drive NOTE: 3TB of Disk Storage	EH952A
	HP StorageWorks D2D2503i Backup System NOTE: 3TB of Disk Storage.	EH945A
	HP StorageWorks D2D2504i Backup System	EJ002A
	HP StorageWorks D2D4004i Backup System NOTE: 4.5TB of Disk Storage	EH938A
	NOTE: Please see the QuickSpecs for Technical Specifications and additional information: http://www.hp.com/go/d2d.	

Additional Options

StorageWorks Options	StorageWorks Fibre Channel HBA	
	NOTE: The following is a list of all Fibre Channel Host Bus Adapters for Windows and Linux. For detailed compatibility information please see: http://h18006.www1.hp.com/storage/saninfrastructure/hba.html	
	Brocade Fibre Channel HBAs	
	HP 81B PCIe 8Gb FC Single Port HBA	AP769A
	HP 82B PCIe 8Gb FC Dual Port HBA	AP770A
	HP 41B PCIe 4Gb FC Single Port HBA	AP767A
	HP 42B PCIe 4Gb FC Dual Port HBA	AP768A
	Emulex Fibre Channel HBAs	
	HP StorageWorks 81E 8Gb SP PCI-e FC HBA	AJ762A
	HP 82E 8Gb Dual-port PCI-e FC HBA	AJ763A
	HP StorageWorks FC2142SR 4Gb PCI-e HBA	A8002A
	HP StorageWorks FC2242SR Dual Channel 4 Gb PCI-e HBA	A8003A
	QLogic Fibre Channel HBAs	
	HP StorageWorks 81Q PCI-e FC HBA	AK344A
	HP StorageWorks 82Q 8Gb Dual Port PCI-e FC HBA	AJ764A
	HP StorageWorks FC1142SR 4Gb PCI-e HBA	AE311A
	HP StorageWorks FC1242SR Dual Channel 4 Gb PCI-e HBA	AE312A
	StorageWorks SCSI HBA	
	HP U320e SCSI Host Bus Adapter	AH627A
	NOTE: Recommended HBA for MSL SCSI Tape Library connect.	
	NOTE: Recommended Dual Channel Ultra320 SCSI Controller for connecting multi-drive MSL tape libraries to ProLiant servers.	
HP StorageWorks Modular Smart Array	HP StorageWorks 50 Modular Smart Array	
	HP StorageWorks 50 Modular Smart Array	364430-B21
	NOTE: Rack-mountable 10 SFF drive enclosure with single I/O module, redundant hot plug power supplies and hot plug fans.	
	NOTE: Please see the QuickSpecs for Technical Specifications and additional information: http://h18000.www1.hp.com/products/quickspecs/12245_div/12245_div.html (Worldwide)	
	HP StorageWorks 60 Modular Smart Array	
	HP StorageWorks 60 Modular Smart Array	418408-B21
	NOTE: Rack-mountable 12-drive (3.5" 3G SAS/1.5G SATA) 2U enclosure with 3Gb/s SAS host connectivity and redundant power supplies.	
	NOTE: Please see the QuickSpecs for Technical Specifications and additional information: http://h18000.www1.hp.com/products/quickspecs/12627_div/12627_div.html (Worldwide)	
	HP StorageWorks 70 Modular Smart Array	
	HP StorageWorks 70 Modular Smart Array	418800-B21

NOTE: Rack-mountable 25-drive (2.5" 3G SAS/1.5G SATA) 2U enclosure with 3Gb/s SAS host connectivity and redundant power supplies.
NOTE: Please see the QuickSpecs for Technical Specifications and additional information:
http://h18000.www1.hp.com/products/quickspecs/12652_div/12652_div.html (Worldwide)

Uninterruptible Power Systems

HP Rack-mountable UPS

HP R1500 G2 UPS

HP, R1.5kVA UPS, 1U, NA	AF419A
HP, R1.5kVA UPS, 1U, INTL	AF418A
HP, R1.5kVA UPS, 1U, JPN/TW	AF421A

NOTE: Please see QuickSpecs for Technical Specifications and additional information:
http://h18000.www1.hp.com/products/quickspecs/12507_div/12507_div.html (Worldwide)
NOTE: For additional information on sizing your server, please reference:
http://www.upssizer.com

HP R3000 UPS Uninterruptible Power System

HP R3000 UPS	AF444A

NOTE: The R3000v is available in China and India only.

NOTE: Please see UPS QuickSpecs for additional information:
http://h18000.www1.hp.com/products/quickspecs/13129_div/13129_div.html (Worldwide)

HP Rack Series

HP Rack 10000 G2 Series (Carbon/Graphite Metallic)

10642 G2 (42U) Rack Cabinet 1200mm Deep - Shock Pallet	AF034A
10642 G2 (42U) Rack Cabinet 1200mm Deep - Pallet	AF038A
10647 G2 (47U) Rack Cabinet 1200mm Deep - Shock Pallet	AF044A
10647 G2 (47U) Rack Cabinet 1200mm Deep - Pallet	AF045A

NOTE: Cat5e cables are required to connect Interface Adapters to Console Switches. Cat5e cables can be found at the following URL: http://www.hp.com/go/kvm.

NOTE: It is mandatory to use a shock pallet when shipping racks with equipment installed.

NOTE: Please see the QuickSpecs for Technical Specifications and additional information:
http://h18000.www1.hp.com/products/quickspecs/12402_div/12402_div.html (Worldwide)

NOTE: For additional information regarding Rack Cabinets, please see the following URL: http://www.hp.com/go/rackandpower.

Additional Options

HP Rack Options	HP KVM Switch Options	
	0x2x16 KVM Server Console G2 Switch with Virtual Media and CAC	AF618A
	0x2x32 KVM Server Console G2 Switch with Virtual Media and CAC	AF619A
	1x1Ex8 KVM IP Console Switch G2 with Virtual Media and CAC	AF620A
	2x1Ex16 KVM IP Console Switch G2 with Virtual Media and CAC	AF621A
	4x1Ex32 KVM IP Console Switch G2 with Virtual Media and CAC	AF622A
	HP 1x4 Console Switch	AF611A
	HP PS2 Server Console Cable, 6 foot, 2-Pack	AF612A
	HP USB Server Console Cable, 6 foot, 2-Pack NOTE: required for supporting USB peripheral	AF613A
	NOTE: For additional information regarding KVM switches, Serial Console servers, rack mount monitors, keyboards and all related options please see the following URL: http://www.hp.com/go/kvm	
USB Options	HP USB Internal Cable Kit	451363-B21
	1.44MB External USB Floppy Drive All	DC141B
	USB Floppy Drive	DC361B
	USB P/S2 Optical Mouse	DC369A
	USB Standard Keyboard All	DT528A#
Service and Support Offerings (HP Care Pack Services)	Hardware Services 4-Hour On-site Service	
	13-Hour x 5-Day Coverage, 3 Years, Electronic	U9509E
	24-Hour x 7-Day Coverage, 3 Years, Electronic	U9510E
	Hardware Services Next Business Day On-Site Service	
	9-Hour x 5-Day Coverage, 3 Years, Electronic	U9508E
	Hardware Services 6-Hour Call to Repair On-Site Service	
	9-Hour x 5-Day Coverage, 3 Years, Electronic	U9511E
	Hardware Installation, Electronic	U9520E
	NOTE: For more information, customer/resellers can contact: http://www.hp.com/services/carepack	

Memory

NOTE: Memory configurations listed do not apply to "Factory Integrated Models".
NOTE: Processors 2374 HE and above use PC2-6400 memory except for 8GB DIMMs which remain PC2-5300 (408855-B21 and 495605-B21). PC2-5300 memory (except for kits 408855-B21 and 495605-B21) can only be used with processor models 2360 SE and below.

HP ProLiant DL165 G5 (all models)

Standard Memory

2 GB (2 x 1 GB) PC2-5300 DIMM memory, with Advanced ECC Capabilities memory installed.

Maximum Memory

Up to 64GB memory is available with the optional installation of PC2-5300 Registered DIMM memory kits.
Memory should be installed in pairs and matched for optimum performance.

NOTE: Chart does not represent all possible memory configurations.

Memory	Slot							
	1	2	3	4	5	6	7	8
Standard (2 GB)	1 GB	1 GB	Empty	Empty	Empty	Empty	Empty	Empty
Maximum (64 GB)	8 GB	8 GB	8 GB	8 GB	8 GB	8 GB	8 GB	8 GB

Following are memory options available from HP:

1 GB REG PC2-5300 2 x 512 MB Single Rank Kit	408850-B21
2 GB REG PC2-6400 2 x 1 GB Kit	497763-B21
2 GB REG PC2-5300 2 x 1 GB Single Rank Kit	408851-B21
2 GB REG PC2-5300 2 x 1 GB Low Power Single Rank Kit	483399-B21
4 GB REG PC2-6400 2 x 2 GB Kit	497765-B21
4 GB REG PC2-5300 2 x 2 GB Low Power Single Rank Kit	483401-B21
4 GB REG PC2-5300 2 x 2 GB Dual Rank Kit	408853-B21
8 GB REG PC2-6400 2 x 4 GB Kit	497767-B21
8 GB REG PC2-6400 2 x 4 GB Low Power Kit	504351-B21
8 GB REG PC2-5300 2 x 4 GB Dual Rank Kit	408854-B21
8 GB REG PC2-5300 2 x 4 GB Low Power Dual Rank Kit	483403-B21
16 GB REG PC2-5300 2 x 8 GB Kit	408855-B21
64 GB REG PC2-5300 8 x 8 GB Kit	495605-B21



1-4 Non-hot plug 3.5" SATA or Hot-plug SAS/SATA hard drive bays

A Optional DVD-ROM, or DVD/CD RW

Drive Support

Removable Media

	Quantity Supported	Position Supported	Controller
DVD-ROM	Up to 1	A	Integrated IDE (ATAPI) (optional)
DVD/CD RW	Up to 1	A	Integrated IDE (ATAPI) (optional)

Hard Drives

NOTE: The components of a storage subsystem (e.g. the drive, the HBA/controller, and the server backplane) should operate at the same data transfer rate or the system bandwidth will be negotiated down to an acceptable level for all components.

NOTE: Hard drives have either a one year or three year warranty; refer to the specific hard drive QuickSpecs for details.

SATA Non-Hot Plug 3.5" Entry (ETY) Drives

	Quantity Supported	Position Supported	Controller
160GB 3G SATA 7.2K	Up to 4	1-4	HP Embedded SATA Controller

SATA Non-Hot Plug 3.5" Midline (MDL) Drives

	Quantity Supported	Position Supported	Controller
750GB 3G SATA 7.2K 500GB 3G SATA 7.2K 250GB 3G SATA 7.2K	Up to 4	1-4	HP Embedded SATA Controller

3.5" SATA Non-Hot Plug Drives

	Quantity Supported	Position Supported	Controller
500GB 1.5G SATA 7.2K 250GB 1.5G SATA 7.2K 160GB 1.5G SATA 7.2K	Up to 4	1-4	HP Embedded SATA Controller

SATA Hot Plug Entry (ETY) Drives (3.5")

NOTE: Installation of the Hot Plug Backplane 1U 2S Kit (445985-B21) is required if ordering third or fourth Hard Drives for Hot Plug models only.

	Quantity Supported	Position Supported	Controller
160GB 3G SATA 7.2K	Up to 4	1-4	HP Embedded SATA Controller

3.5" SATA Hot Plug Drives

	Quantity Supported	Position Supported	Controller
750GB 1.5G SATA 7.2K 500GB 1.5G SATA 7.2K 250GB 1.5G SATA 7.2K 160GB 1.5G SATA 7.2K	Up to 4	1-4	HP Embedded SATA Controller

SATA Hot Plug 3.5" Midline (MDL) Drives

	Quantity Supported	Position Supported	Controller
1TB 3G SATA 7.2K 750GB 3G SATA 7.2K 500GB 3G SATA 7.2K 250GB 3G SATA 7.2K	Up to 4	1-4	HP Embedded SATA Controller

SATA Hot Plug 3.5" Midline (MDL) Solid State Drives

	Quantity Supported	Position Supported	Controller
120GB 3G SATA 60GB 3G SATA	Up to 4	1-4	HP SC40Ge 4-Port Internal SAS HBA with RAID 0, 1 NOTE: When using the SC40Ge with SATA Hard Drives, 1.5G SATA Hard Drives are required. Transfer rate: 1.5 Gb/s SATA, 3 Gb/s SAS HP Smart Array P400 Controller HP Smart Array P800 Controller

SAS Hot Plug 3.5" Enterprise (ENT) Drives

	Quantity Supported	Position Supported	Controller
600GB 6G SAS 15K 450GB 6G SAS 15K 450GB 3G SAS 15K 300GB 3G SAS 15K 146GB 3G SAS 15K	Up to 4	1-4	HP 4 Internal Port SAS HBA with RAID

SAS Hot Plug 3.5" Midline (MDL) Drives

	Quantity Supported	Position Supported	Controller
1 TB 3G SAS 7.2K 750GB 3G SAS 7.2K	Up to 4	1-4	HP 4 Internal Port SAS HBA with RAID

Tape and Disk-Based Backup

NOTE: For a complete listing of compatible tape and disk-based backup offerings, please visit: http://www.hp.com/go/connect
NOTE: SAS Tape Drives: Connecting hard drive cage and SAS tape to the same SAS Controller using split cable (supplied with tape drive) deactivates 1 of the hard drive bays. Actual hard drive bay deactivated depends on where split cable plugs into SAS drive connector. Example: 3x SAS cable connector plugged into SAS drive connector (5-8) on the back of the hard drive cage would mean drive bay 8 is deactivated.

	Position Supported	Controller	Controller Part Number
HP StorageWorks SCSI Tape Drives, External LTO-1 Ultrium 232 LTO-2 Ultrium 448 LTO-3 Ultrium 920 LTO-3 Ultrium 960 LTO-4 Ultrium 1760 LTO-4 Ultrium 1840 DAT 40 DAT 72 DAT 160 1U Rack-Mount Kit 3U Rack-Mount Kit	External	HP SC11Xe Host Bus Adapter	412911-B21
HP StorageWorks USB Tape Drives, External DAT 40 USB DAT 72 USB DAT 160 USB DAT 320 USB 1U USB Rack-Mount Kit	External	USB 2.0 Port	N/A
HP StorageWorks SAS Tape Drives, External DAT 320 SAS DAT 160 SAS LTO-2 Ultrium 448 SAS LTO-3 Ultrium 920 SAS LTO-4 Ultrium 1760 SAS LTO-4 Ultrium 1840 SAS 1U Rack-Mount Kit 3U Rack-Mount Kit	External	HP SC44Ge Host Bus Adapter	416096-B21
HP StorageWorks SCSI Tape Automation, External DAT 72x10 Autoloader 1/8 G2 Autoloader MSL2024 MSL4048	External	HP SC11Xe Host Bus Adapter HP U320e SCSI Host Bus Adapter NOTE: Recommended for MSL tape libraries.	412911-B21 AH627A

Storage

HP StorageWorks SAS Tape Automation, External 1/8 G2 Autoloader MSL2024 MSL4048	External	HP SC44Ge Host Bus Adapter	416096-B21
HP StorageWorks Fibre Tape Automation, External MSL2024 MSL4048 MSL8096	External	Please consult the EBS connectivity matrix at: http://www.hp.com/go/ebs for detailed connectivity information.	N/A
HP StorageWorks RDX Removable Disk Backup System, External RDX160 RDX320 RDX500	External	USB 2.0 port	N/A
HP StorageWorks D2D Backup Systems D2D120 D2D130 D2D2503i D2D2504i D2D4004i	External	Embedded Network Controller	N/A

External Storage

	Quantity Supported	Position Supported	Controller
50 Modular Smart Array	Up to 4	External	HP Smart Array E500/256MB Controller
	Up to 4		HP Smart Array P800/512 BBWC Controller
60 Modular Smart Array	Up to 4	External	HP Smart Array E500/256MB Controller
	Up to 8		HP Smart Array P800/512 BBWC Controller
70 Modular Smart Array	Up to 4	External	HP Smart Array E500/256MB Controller
	Up to 4		HP Smart Array P800/512 BBWC Controller

Power Specifications

Operational Input Voltage Range (Vrms)	90Vac to 264Vac full range at 25oC ambient
Frequency Range (Nominal) (Hz)	47 Hz to 63 Hz
Power Output	650W Nominal
Server Power Cords	One 6' Highline (IEC-IEC) power cord ships standard NOTE: HP ProLiant DL servers no longer ship standard with NEMA power cords (163719-002) that allow connection to 110V US wall outlets in a home or office. HP ProLiant DL servers are primarily connected to PDU's in data center racks so they now ship standard with only a PDU power cord (416151-B21). If a user wishes to power a ProLiant DL server using a 110V receptacle (NEMA-15), the NEMA power cord (227099-001) must be ordered separately. If customers require a local power cord, they can check the power cord matrix for the appropriate cord. Please see the following power cord matrix: http://www.hp.com/go/powercordmatrix.

System Unit	Dimensions (H x W x D) (with bezel)	1.70 x 17.64 x 26.85 in (4.32 x 44.80 x 68.20 cm)	
	Weight (approximate)	Maximum (all hard drives, power supplies, and processors installed)	37.00 lb (16.78 kg)
		Minimum (one hard drive, power supply, and processor installed)	30.00 lb (13.69 kg)
	Input Requirements (per 650W power supply)	Rated Line Voltage	100-127 VAC, 200-240 VAC
		Rated Input Current	10.0 A (at 115 VAC), 5.5 A (at 230 VAC)
		Rated Input Frequency	47 to 63 Hz
		Rated Input Power	852.16 W (at 100 VAC), 805.03W (at 200 VAC)
	BTU Rating	Maximum	2217.89 BTU/hr (at 100 VAC), 2217.89 BTU/hr (at 200 VAC)
	Power Specifications	To review typical system power ratings use the Power Advisor which is available via the online tool located at URL: www.hp.com/go/proliant-energy-efficient - Click on the system of interest. Example: DL165 G5 - Follow the instructions of the next screens.	
	Power Supply Output (per power supply)	Rated Steady-State Power	650 W (at 100 VAC), 650 W (at 200 VAC)
		Maximum Peak Power	700 W (at 100 VAC), 700 W (at 200 VAC)
	Optional High Efficiency Power Supply Specifications		
	Input Requirements (per power supply)	Rated Line Voltage	90-132 VAC, 200-240 VAC
		Rated Input Current	9.4 A (at 115 VAC), 7.8 A (at 230 VAC)
		Rated Input Frequency	47 to 63 Hz
		Rated Input Power	1075 W (at 100 VAC), 1375W (at 200 VAC)
	BTU Rating	Maximum	3070.93 BTU/hr (at 100 VAC), 4094.57 BTU/hr (at 200 VAC)
	Power Specifications	To review typical system power ratings use the Power Advisor which is available via the online tool located at URL: www.hp.com/go/proliant-energy-efficient - Click on the system of interest. Example: DL165 G5 - Follow the instructions of the next screens.	

Power Supply Output (per power supply)	Rated Steady-State Power	900 W (at 100 VAC), 1200 W (at 200 VAC)
	Maximum Peak Power	900 W (at 100 VAC), 1200 W (at 200 VAC)
System Inlet Temperature	Operating	10° to 35°C (50° to 95°F) at sea level with an altitude derating of 1.0°C per every 305 m (1.8°F per every 1000 ft) above sea level to a maximum of 3050 m (10,000 ft), no direct sustained sunlight. Maximum rate of change is 10°C/hr (18°F/hr). The upper limit may be limited by the type and number of options installed. System performance may be reduced if operating with a fan fault or above 30°C (86°F).
	Non-operating	-30° to 60°C (-22° to 140°F). Maximum rate of change is 20°C/hr (36°F/hr).
Relative Humidity (non-condensing)	Operating	10 to 90% relative humidity (Rh), 28°C (82.4°F) maximum wet bulb temperature, non-condensing.
	Non-operating	5 to 95% relative humidity (Rh), 38.7°C (101.7°F) maximum wet bulb temperature, non-condensing.
Altitude	Operating	3050 m (10,000 ft). This value may be limited by the type and number of options installed. Maximum allowable altitude change rate is 457 m/min (1500 ft/min).
	Non-operating	9144 m (30,000 ft). Maximum allowable altitude change rate is 457 m/min (1500 ft/min).
Acoustic Noise	Listed are the declared A-Weighted sound power levels (LWAd) and declared average bystander position A-Weighted sound pressure levels (LpAm) when the product is operating in a 23°C ambient environment. Noise emissions were measured in accordance with ISO 7779 (ECMA 74) and declared in accordance with ISO 9296 (ECMA 109).	
	Idle	
	LWAd	6.82 B
	LpAm	51.93 dBA
	Operating	
	LWAd	6.84 B
	LpAm	51.93 dBA
Emissions Classification (EMC)	**FCC Rating**	Class A
	Normative Standards	CISPR 22; EN55022; EN55024; FCC CFR 47, Pt 15; ICES-003; CNS13438; GB9254; K22;K24; EN 61000-3-2; EN 61000-3-3; EN 60950-1; IEC 60950-1

NOTE: Product conformance to cited product specifications is based on sample (type) testing, evaluation, or assessment. This product or family of products is eligible to bear the appropriate compliance logos and statements

HP 160GB 1.5G SATA 7.2K NHP 3.5" ETY HDD 458947-B21	160-GB 7.2K	**Capacity**	160,041 MB	
		Height	1.028 in (2.61 cm)	
		Width	4.0 in (10.16 cm)	
		Depth	5.787 in (147.0 mm)	
		Interface	Serial ATA	
		Transfer Rate Synchronous (Maximum)	1.5Gb/s	
		Native Command Queuing	N/A	
		Seek Time (typical reads, including settling)	Single Track	2.0 ms
			Average	<11 ms
			Full-Stroke	23.0 ms
			Rotational Speed	7,200 rpm
		Physical Configuration	Bytes/Sector	512
			Logical Blocks	312,581,808
		Operating Temperature	41° to 131° F (5° to 55° C)	

Embedded SATA Controller	**Drives Supported**	Up to 4 SATA devices
	Channels	4 1.5Gb SATA
	Storage Capacity	3.0TB internal storage
	Data Transfer Method	32-bit/33-MHz PCI bus-master
	Maximum SATA Channel Transfer Rate	1.5Gb/s per channel
	Maximum Transfer Rate per PCI Bus (peak)	266 MB/s per channel
	Protocols	SATA PIO Mode[0-4]
	Cable	SATA
	Internal ATA Connectors	Four SATA connectors NOTE: Raid support requires optional slot based raid controller.

Technical Specifications

HP 4 Internal Port SAS HBA with RAID	Drives Supported	Up to 4 SATA/SAS drives	
	Channels	4	
	Storage Capacity	1.8TB SAS, 3.0TB SATA	
	Data Transfer Method	PCI-Express	
	Maximum SAS Channel Transfer Rate	3Gb/s per channel	
	Maximum SAS transfer rate	300Mb/sec per port	
	Protocols Supported	SSP, STP, SMP	
	Internal Connectors	1 SAS	
Embedded NC7782 dual-port gigabit server adapter	Network Interface	10Base-T/ 100Base-TX/ 1000Base-TX	
	Compatibility	IEEE 802.3 10Base-T	
		IEEE 802.3 1000Base-T	
		IEEE 802.3 100Base-TX	
	Data Transfer Method	PCI-X	
	Network Transfer Rate	10Base-T (Half-Duplex)	10 Mb/s
		10Base-T (Full-Duplex)	20 Mb/s
		100Base-TX (Half-Duplex)	100 Mb/s
		100Base-TX (Full-Duplex)	200 Mb/s
		1000Base-TX (Half and Full-Duplex)	2000 Mb/s
	Connector	RJ-45	
	Cable Support	10Base-T	Categories 3, 4 or 5 UTP; up to 328 ft (100 m)
		10/100/1000Base-TX	Category 5 UTP (2 Pair); up to 328 ft (100 m)
Environment-friendly Products and Approach	End-of-life Management and Recycling	Hewlett-Packard offers end-of-life HP product return, trade-in, and recycling programs in many geographic areas. For trade-in information, please go to: http://www.hp.com/go/green. To recycle your product, please go to: http://www.hp.com/go/green or contact your nearest HP sales office. Products returned to HP will be recycled, recovered or disposed of in a responsible manner. The EU WEEE directive (2002/95/EC) requires manufacturers to provide treatment information for each product type for use by treatment facilities. This information (product disassembly instructions) is posted on the Hewlett Packard web site at: http://www.hp.com/go/green. These instructions may be used by recyclers and other WEEE treatment facilities as well as HP OEM customers who integrate and re-sell HP equipment.	

Technical Specifications

© Copyright 2009 Hewlett-Packard Development Company, L.P.

The information contained herein is subject to change without notice.

Microsoft and Windows NT are US registered trademarks of Microsoft Corporation. AMD, Opteron, and Hyper-Transport are trademarks of AMD Corporation in the United States and other countries.

The only warranties for HP products and services are set forth in the express warranty statements accompanying such products and services. Nothing herein should be construed as constituting an additional warranty. HP shall not be liable for technical or editorial errors or omissions contained herein.
For hard drives, 1GB = 1 billion bytes. Actual formatted capacity is less.