HP ProLiant DL165 G6 Server

Maintenance and Service Guide



Part number 576277-002
Second edition July 2009

Legal notices

© Copyright 2009 Hewlett-Packard Development Company, L.P.

The information contained herein is subject to change without notice. The only warranties for HP products and services are set forth in the express warranty statements accompanying such products and services. Nothing herein should be construed as constituting an additional warranty. HP shall not be liable for technical or editorial errors or omissions contained herein.

AMD is a trademark of Advanced Micro Systems, Inc.

Contents

Customer self repair 5
Parts only warranty service 5

Illustrated parts catalog 16
Mechanical components 16
System components with non-hot-plug HDD 20
System components with hot-plug HDD 21
HP Contact Information 24
Before You Contact HP 24

Connectors, Switches, and LEDs 25
Connectors and Components 25
Front Panel Components 25
Rear panel components 26
System board components 27
Jumpers – Password and Chassis ID 29
System Switches 29
LED Indicators 30
Front panel LED indicators 30
Rear panel LED indicators 34
System board LED indicator 35

Removal and Replacement Procedures 36
Hardware Configuration Tools 36
Hardware Configuration Information 36
Electrostatic Discharge Information 36
Pre-Installation Procedure 37
Post-installation instructions 37
Server Warnings and Cautions 37
Symbols on Equipment 38
Powering Down the Server 39
System Covers 39
Top Cover 39
Top Middle Cover 40
Drives 41
Cable Management 41
Cable Connections 43
Drive Bay Configuration 44
Optical Media Device Bay 44
Hard Drives 48
SAS/SATA HDD Backplane 52
System Board Configuration 56
Processor 56
Memory 61
PCI Expansion Cards 63
System Battery 71
System Board Removal and Replacement Procedure 73
Power Supply Unit (PSU) 74
System Fan 77

Diagnostic tools and Setup Utilities 80
BIOS Software 80
BIOS Setup Utility 80
Accessing the BIOS Setup Utility 80
Navigating through the Setup Utility 81
Setup Utility Menu Bar 83
BIOS Update 91
Clear CMOS 92
Power-On Self-Test (POST) 92
POST Error Indicators 92
POST Error Message Definition 93
POST Related Troubleshooting 96
Physical and Operating Specifications 97
System Unit 97
Index 100

Customer self repair

HP products are designed with many Customer Self Repair (CSR) parts to minimize repair time and allow for greater flexibility in performing defective parts replacement. If during the diagnosis period HP (or HP service providers or service partners) identifies that the repair can be accomplished by the use of a CSR part, HP will ship that part directly to you for replacement. There are two categories of CSR parts:

- **Mandatory**—Parts for which customer self repair is mandatory. If you request HP to replace these parts, you will be charged for the travel and labor costs of this service.
- **Optional**—Parts for which customer self repair is optional. These parts are also designed for customer self repair. If, however, you require that HP replace them for you, there may or may not be additional charges, depending on the type of warranty service designated for your product.

NOTE: Some HP parts are not designed for customer self repair. In order to satisfy the customer warranty, HP requires that an authorized service provider replace the part. These parts are identified as "No" in the Illustrated Parts Catalog.

Based on availability and where geography permits, CSR parts will be shipped for next business day delivery. Same day or four-hour delivery may be offered at an additional charge where geography permits. If assistance is required, you can call the HP Technical Support Center and a technician will help you over the telephone. HP specifies in the materials shipped with a replacement CSR part whether a defective part must be returned to HP. In cases where it is required to return the defective part to HP, you must ship the defective part back to HP within a defined period of time, normally five (5) business days. The defective part must be returned with the associated documentation in the provided shipping material. Failure to return the defective part may result in HP billing you for the replacement. With a customer self repair, HP will pay all shipping and part return costs and determine the courier/carrier to be used.

For more information about HP's Customer Self Repair program, contact your local service provider. For the North American program, refer to the HP website (**http://www.hp.com/go/selfrepair**).

Parts only warranty service

Your HP Limited Warranty may include a parts only warranty service. Under the terms of parts only warranty service, HP will provide replacement parts free of charge.

For parts only warranty service, CSR part replacement is mandatory. If you request HP to replace these parts, you will be charged for the travel and labor costs of this service.

Réparation par le client (CSR)

Les produits HP comportent de nombreuses pièces CSR (Customer Self Repair = réparation par le client) afin de minimiser les délais de réparation et faciliter le remplacement des pièces défectueuses. Si pendant la période de diagnostic, HP (ou ses partenaires ou mainteneurs agréés) détermine que la réparation peut être effectuée à l'aide d'une pièce CSR, HP vous l'envoie directement. Il existe deux catégories de pièces CSR:

- **Obligatoire** - Pièces pour lesquelles la réparation par le client est obligatoire. Si vous demandez à HP de remplacer ces pièces, les coûts de déplacement et main d'œuvre du service vous seront facturés.
- **Facultatif** - Pièces pour lesquelles la réparation par le client est facultative. Ces pièces sont également conçues pour permettre au client d'effectuer lui-même la réparation. Toutefois, si vous demandez à HP de remplacer ces pièces, l'intervention peut ou non vous être facturée, selon le type de garantie applicable à votre produit.

REMARQUE: Certaines pièces HP ne sont pas conçues pour permettre au client d'effectuer lui-même la réparation. Pour que la garantie puisse s'appliquer, HP exige que le remplacement de la pièce soit effectué par un Mainteneur Agréé. Ces pièces sont identifiées par la mention "Non" dans le Catalogue illustré.

Les pièces CSR sont livrées le jour ouvré suivant, dans la limite des stocks disponibles et selon votre situation géographique. Si votre situation géographique le permet et que vous demandez une livraison le jour même ou dans les 4 heures, celle-ci vous sera facturée. Pour bénéficier d'une assistance téléphonique, appelez le Centre d'assistance technique HP. Dans les documents envoyés avec la pièce de rechange CSR, HP précise s'il est nécessaire de lui retourner la pièce défectueuse. Si c'est le cas, vous devez le faire dans le délai indiqué, généralement cinq (5) jours ouvrés. La pièce et sa documentation doivent être retournées dans l'emballage fourni. Si vous ne retournez pas la pièce défectueuse, HP se réserve le droit de vous facturer les coûts de remplacement. Dans le cas d'une pièce CSR, HP supporte l'ensemble des frais d'expédition et de retour, et détermine la société de courses ou le transporteur à utiliser.

Pour plus d'informations sur le programme CSR de HP, contactez votre Mainteneur Agrée local. Pour plus d'informations sur ce programme en Amérique du Nord, consultez le site Web HP (**http://www.hp.com/go/selfrepair**).

Service de garantie "pièces seules"

Votre garantie limitée HP peut inclure un service de garantie "pièces seules". Dans ce cas, les pièces de rechange fournies par HP ne sont pas facturées.

Dans le cadre de ce service, la réparation des pièces CSR par le client est obligatoire. Si vous demandez à HP de remplacer ces pièces, les coûts de déplacement et main d'œuvre du service vous seront facturés.

Riparazione da parte del cliente

Per abbreviare i tempi di riparazione e garantire una maggiore flessibilità nella sostituzione di parti difettose, i prodotti HP sono realizzati con numerosi componenti che possono essere riparati direttamente dal cliente (CSR, Customer Self Repair). Se in fase di diagnostica HP (o un centro di servizi o di assistenza HP) identifica il guasto come riparabile mediante un ricambio CSR, HP lo spedirà direttamente al cliente per la sostituzione. Vi sono due categorie di parti CSR:

- **Obbligatorie** – Parti che devono essere necessariamente riparate dal cliente. Se il cliente ne affida la riparazione ad HP, deve sostenere le spese di spedizione e di manodopera per il servizio.
- **Opzionali** – Parti la cui riparazione da parte del cliente è facoltativa. Si tratta comunque di componenti progettati per questo scopo. Se tuttavia il cliente ne richiede la sostituzione ad HP, potrebbe dover sostenere spese addizionali a seconda del tipo di garanzia previsto per il prodotto.

NOTA: alcuni componenti HP non sono progettati per la riparazione da parte del cliente. Per rispettare la garanzia, HP richiede che queste parti siano sostituite da un centro di assistenza autorizzato. Tali parti sono identificate da un "No" nel Catalogo illustrato dei componenti.

In base alla disponibilità e alla località geografica, le parti CSR vengono spedite con consegna entro il giorno lavorativo seguente. La consegna nel giorno stesso o entro quattro ore è offerta con un supplemento di costo solo in alcune zone. In caso di necessità si può richiedere l'assistenza telefonica di un addetto del centro di supporto tecnico HP. Nel materiale fornito con una parte di ricambio CSR, HP specifica se il cliente deve restituire dei componenti. Qualora sia richiesta la resa ad HP del componente difettoso, lo si deve spedire ad HP entro un determinato periodo di tempo, generalmente cinque (5) giorni lavorativi. Il componente difettoso deve essere restituito con la documentazione associata nell'imballo di spedizione fornito. La mancata restituzione del componente può comportare la fatturazione del ricambio da parte di HP. Nel caso di riparazione da parte del cliente, HP sostiene tutte le spese di spedizione e resa e sceglie il corriere/vettore da utilizzare.

Per ulteriori informazioni sul programma CSR di HP contattare il centro di assistenza di zona. Per il programma in Nord America fare riferimento al sito Web HP (**http://www.hp.com/go/selfrepair**).

Servizio di garanzia per i soli componenti

La garanzia limitata HP può includere un servizio di garanzia per i soli componenti. Nei termini di garanzia del servizio per i soli componenti, HP fornirà gratuitamente le parti di ricambio.

Per il servizio di garanzia per i soli componenti è obbligatoria la formula CSR che prevede la riparazione da parte del cliente. Se il cliente invece richiede la sostituzione ad HP, dovrà sostenere le spese di spedizione e di manodopera per il servizio.

Customer Self Repair

HP Produkte enthalten viele CSR-Teile (Customer Self Repair), um Reparaturzeiten zu minimieren und höhere Flexibilität beim Austausch defekter Bauteile zu ermöglichen. Wenn HP (oder ein HP Servicepartner) bei der Diagnose feststellt, dass das Produkt mithilfe eines CSR-Teils repariert werden kann, sendet Ihnen HP dieses Bauteil zum Austausch direkt zu. CSR-Teile werden in zwei Kategorien unterteilt:

- **Zwingend –** Teile, für die das Customer Self Repair-Verfahren zwingend vorgegeben ist. Wenn Sie den Austausch dieser Teile von HP vornehmen lassen, werden Ihnen die Anfahrt- und Arbeitskosten für diesen Service berechnet.
- **Optional –** Teile, für die das Customer Self Repair-Verfahren optional ist. Diese Teile sind auch für Customer Self Repair ausgelegt. Wenn Sie jedoch den Austausch dieser Teile von HP vornehmen lassen möchten, können bei diesem Service je nach den für Ihr Produkt vorgesehenen Garantiebedingungen zusätzliche Kosten anfallen.

HINWEIS: Einige Teile sind nicht für Customer Self Repair ausgelegt. Um den Garantieanspruch des Kunden zu erfüllen, muss das Teil von einem HP Servicepartner ersetzt werden. Im illustrierten Teilekatalog sind diese Teile mit „No" bzw. „Nein" gekennzeichnet.

CSR-Teile werden abhängig von der Verfügbarkeit und vom Lieferziel am folgenden Geschäftstag geliefert. Für bestimmte Standorte ist eine Lieferung am selben Tag oder innerhalb von vier Stunden gegen einen Aufpreis verfügbar. Wenn Sie Hilfe benötigen, können Sie das HP technische Support Center anrufen und sich von einem Mitarbeiter per Telefon helfen lassen. Den Materialien, die mit einem CSR-Ersatzteil geliefert werden, können Sie entnehmen, ob das defekte Teil an HP zurückgeschickt werden muss. Wenn es erforderlich ist, das defekte Teil an HP zurückzuschicken, müssen Sie dies innerhalb eines vorgegebenen Zeitraums tun, in der Regel innerhalb von fünf (5) Geschäftstagen. Das defekte Teil muss mit der zugehörigen Dokumentation in der Verpackung zurückgeschickt werden, die im Lieferumfang enthalten ist. Wenn Sie das defekte Teil nicht zurückschicken, kann HP Ihnen das Ersatzteil in Rechnung stellen. Im Falle von Customer Self Repair kommt HP für alle Kosten für die Lieferung und Rücksendung auf und bestimmt den Kurier-/Frachtdienst.

Weitere Informationen über das HP Customer Self Repair Programm erhalten Sie von Ihrem Servicepartner vor Ort. Informationen über das CSR-Programm in Nordamerika finden Sie auf der HP Website unter (**http://www.hp.com/go/selfrepair**).

Parts-only Warranty Service (Garantieservice ausschließlich für Teile)

Ihre HP Garantie umfasst möglicherweise einen Parts-only Warranty Service (Garantieservice ausschließlich für Teile). Gemäß den Bestimmungen des Parts-only Warranty Service stellt HP Ersatzteile kostenlos zur Verfügung.

Für den Parts-only Warranty Service ist das CSR-Verfahren zwingend vorgegeben. Wenn Sie den Austausch dieser Teile von HP vornehmen lassen, werden Ihnen die Anfahrt- und Arbeitskosten für diesen Service berechnet.

Reparaciones del propio cliente

Los productos de HP incluyen muchos componentes que el propio usuario puede reemplazar (*Customer Self Repair*, CSR) para minimizar el tiempo de reparación y ofrecer una mayor flexibilidad a la hora de realizar sustituciones de componentes defectuosos. Si, durante la fase de diagnóstico, HP (o los proveedores o socios de servicio de HP) identifica que una reparación puede llevarse a cabo mediante el uso de un componente CSR, HP le enviará dicho componente directamente para que realice su sustitución. Los componentes CSR se clasifican en dos categorías:

- **Obligatorio:** componentes para los que la reparación por parte del usuario es obligatoria. Si solicita a HP que realice la sustitución de estos componentes, tendrá que hacerse cargo de los gastos de desplazamiento y de mano de obra de dicho servicio.
- **Opcional:** componentes para los que la reparación por parte del usuario es opcional. Estos componentes también están diseñados para que puedan ser reparados por el usuario. Sin embargo, si precisa que HP realice su sustitución, puede o no conllevar costes adicionales, dependiendo del tipo de servicio de garantía correspondiente al producto.

NOTA: Algunos componentes no están diseñados para que puedan ser reparados por el usuario. Para que el usuario haga valer su garantía, HP pone como condición que un proveedor de servicios autorizado realice la sustitución de estos componentes. Dichos componentes se identifican con la palabra "No" en el catálogo ilustrado de componentes.

Según la disponibilidad y la situación geográfica, los componentes CSR se enviarán para que lleguen a su destino al siguiente día laborable. Si la situación geográfica lo permite, se puede solicitar la entrega en el mismo día o en cuatro horas con un coste adicional. Si precisa asistencia técnica, puede llamar al Centro de asistencia técnica de HP y recibirá ayuda telefónica por parte de un técnico. Con el envío de materiales para la sustitución de componentes CSR, HP especificará si los componentes defectuosos deberán devolverse a HP. En aquellos casos en los que sea necesario devolver algún componente a HP, deberá hacerlo en el periodo de tiempo especificado, normalmente cinco días laborables. Los componentes defectuosos deberán devolverse con toda la documentación relacionada y con el embalaje de envío. Si no enviara el componente defectuoso requerido, HP podrá cobrarle por el de sustitución. En el caso de todas sustituciones que lleve a cabo el cliente, HP se hará cargo de todos los gastos de envío y devolución de componentes y escogerá la empresa de transporte que se utilice para dicho servicio.

Para obtener más información acerca del programa de Reparaciones del propio cliente de HP, póngase en contacto con su proveedor de servicios local. Si está interesado en el programa para Norteamérica, visite la página web de HP siguiente (**http://www.hp.com/go/selfrepair**).

Servicio de garantía exclusivo de componentes

La garantía limitada de HP puede que incluya un servicio de garantía exclusivo de componentes. Según las condiciones de este servicio exclusivo de componentes, HP le facilitará los componentes de repuesto sin cargo adicional alguno.

Para este servicio de garantía exclusivo de componentes, es obligatoria la sustitución de componentes por parte del usuario (CSR). Si solicita a HP que realice la sustitución de estos componentes, tendrá que hacerse cargo de los gastos de desplazamiento y de mano de obra de dicho servicio.

Customer Self Repair

Veel onderdelen in HP producten zijn door de klant zelf te repareren, waardoor de reparatieduur tot een minimum beperkt kan blijven en de flexibiliteit in het vervangen van defecte onderdelen groter is. Deze onderdelen worden CSR-onderdelen (Customer Self Repair) genoemd. Als HP (of een HP Service Partner) bij de diagnose vaststelt dat de reparatie kan worden uitgevoerd met een CSR-onderdeel, verzendt HP dat onderdeel rechtstreeks naar u, zodat u het defecte onderdeel daarmee kunt vervangen. Er zijn twee categorieën CSR-onderdelen:

- **Verplicht:** Onderdelen waarvoor reparatie door de klant verplicht is. Als u HP verzoekt deze onderdelen voor u te vervangen, worden u voor deze service reiskosten en arbeidsloon in rekening gebracht.
- **Optioneel:** Onderdelen waarvoor reparatie door de klant optioneel is. Ook deze onderdelen zijn ontworpen voor reparatie door de klant. Als u echter HP verzoekt deze onderdelen voor u te vervangen, kunnen daarvoor extra kosten in rekening worden gebracht, afhankelijk van het type garantieservice voor het product.

OPMERKING: Sommige HP onderdelen zijn niet ontwikkeld voor reparatie door de klant. In verband met de garantievoorwaarden moet het onderdeel door een geautoriseerde Service Partner worden vervangen. Deze onderdelen worden in de geïllustreerde onderdelencatalogus aangemerkt met "Nee".

Afhankelijk van de leverbaarheid en de locatie worden CSR-onderdelen verzonden voor levering op de eerstvolgende werkdag. Levering op dezelfde dag of binnen vier uur kan tegen meerkosten worden aangeboden, indien dit mogelijk is gezien de locatie. Indien assistentie gewenst is, belt u een HP Service Partner om via de telefoon technische ondersteuning te ontvangen. HP vermeldt in de documentatie bij het vervangende CSR-onderdeel of het defecte onderdeel aan HP moet worden geretourneerd. Als het defecte onderdeel aan HP moet worden teruggezonden, moet u het defecte onderdeel binnen een bepaalde periode, gewoonlijk vijf (5) werkdagen, retourneren aan HP. Het defecte onderdeel moet met de bijbehorende documentatie worden geretourneerd in het meegeleverde verpakkingsmateriaal. Als u het defecte onderdeel niet terugzendt, kan HP u voor het vervangende onderdeel kosten in rekening brengen. Bij reparatie door de klant betaalt HP alle verzendkosten voor het vervangende en geretourneerde onderdeel en kiest HP zelf welke koerier/transportonderneming hiervoor wordt gebruikt.

Neem contact op met een Service Partner voor meer informatie over het Customer Self Repair programma van HP. Informatie over Service Partners vindt u op de HP website (**http://www.hp.nl/services/servicepartners**).

Garantieservice "Parts Only"

Het is mogelijk dat de HP garantie alleen de garantieservice "Parts Only" omvat. Volgens de bepalingen van de Parts Only garantieservice zal HP kosteloos vervangende onderdelen ter beschikking stellen.

Voor de Parts Only garantieservice is vervanging door CSR-onderdelen verplicht. Als u HP verzoekt deze onderdelen voor u te vervangen, worden u voor deze service reiskosten en arbeidsloon in rekening gebracht.

Reparo feito pelo cliente

Os produtos da HP são projetados com muitas peças para reparo feito pelo cliente (CSR) de modo a minimizar o tempo de reparo e permitir maior flexibilidade na substituição de peças com defeito. Se, durante o período de diagnóstico, a HP (ou fornecedores/parceiros de serviço da HP) concluir que o reparo pode ser efetuado pelo uso de uma peça CSR, a peça de reposição será enviada diretamente ao cliente. Existem duas categorias de peças CSR:

- **Obrigatória** – Peças cujo reparo feito pelo cliente é obrigatório. Se desejar que a HP substitua essas peças, serão cobradas as despesas de transporte e mão-de-obra do serviço.
- **Opcional** – Peças cujo reparo feito pelo cliente é opcional. Essas peças também são projetadas para o reparo feito pelo cliente. No entanto, se desejar que a HP as substitua, pode haver ou não a cobrança de taxa adicional, dependendo do tipo de serviço de garantia destinado ao produto.

OBSERVAÇÃO: Algumas peças da HP não são projetadas para o reparo feito pelo cliente. A fim de cumprir a garantia do cliente, a HP exige que um técnico autorizado substitua a peça. Essas peças estão identificadas com a marca "No" (Não), no catálogo de peças ilustrado.

Conforme a disponibilidade e o local geográfico, as peças CSR serão enviadas no primeiro dia útil após o pedido. Onde as condições geográficas permitirem, a entrega no mesmo dia ou em quatro horas pode ser feita mediante uma taxa adicional. Se precisar de auxílio, entre em contato com o Centro de suporte técnico da HP para que um técnico o ajude por telefone. A HP especifica nos materiais fornecidos com a peça CSR de reposição se a peça com defeito deve ser devolvida à HP. Nos casos em que isso for necessário, é preciso enviar a peça com defeito à HP dentro do período determinado, normalmente cinco (5) dias úteis. A peça com defeito deve ser enviada com a documentação correspondente no material de transporte fornecido. Caso não o faça, a HP poderá cobrar a reposição. Para as peças de reparo feito pelo cliente, a HP paga todas as despesas de transporte e de devolução da peça e determina a transportadora/serviço postal a ser utilizado.

Para obter mais informações sobre o programa de reparo feito pelo cliente da HP, entre em contato com o fornecedor de serviços local. Para o programa norte-americano, visite o site da HP (**http://www.hp.com/go/selfrepair**).

Serviço de garantia apenas para peças

A garantia limitada da HP pode incluir um serviço de garantia apenas para peças. Segundo os termos do serviço de garantia apenas para peças, a HP fornece as peças de reposição sem cobrar nenhuma taxa.

No caso desse serviço, a substituição de peças CSR é obrigatória. Se desejar que a HP substitua essas peças, serão cobradas as despesas de transporte e mão-de-obra do serviço.

顧客自己修理保証サービス

修理時間を短縮し、故障部品の交換における高い柔軟性を確保するために、HP製品には多数の顧客自己修理（CSR）部品があります。診断の際に、CSR部品を使用すれば修理ができるとHP（HPまたはHP正規保守代理店）が判断した場合、HPはその部品を直接、お客様に発送し、お客様に交換していただきます。CSR部品には以下の2通りがあります。

- 必須 - 顧客自己修理が必須の部品。当該部品について、もしもお客様がHPに交換作業を依頼される場合には、その修理サービスに関する交通費および人件費がお客様に請求されます。
- 任意 - 顧客自己修理が任意である部品。この部品も顧客自己修理用です。当該部品について、もしもお客様がHPに交換作業を依頼される場合には、お買い上げの製品に適用される保証サービス内容の範囲内においては、別途費用を負担していただくことなく保証サービスを受けることができます。

注： HP製品の一部の部品は、顧客自己修理用ではありません。製品の保証を継続するためには、HPまたはHP正規保守代理店による交換作業が必須となります。部品カタログには、当該部品が顧客自己修理除外品である旨が記載されています。

部品供給が可能な場合、地域によっては、CSR部品を翌営業日に届くように発送します。また、地域によっては、追加費用を負担いただくことにより同日または4時間以内に届くように発送することも可能な場合があります。サポートが必要なときは、HPの修理受付窓口に電話していただければ、技術者が電話でアドバイスします。交換用のCSR部品または同梱物には、故障部品をHPに返送する必要があるかどうかが表示されています。故障部品をHPに返送する必要がある場合は、指定期限内（通常は5営業日以内）に故障部品をHPに返送してください。故障部品を返送する場合は、届いた時の梱包箱に関連書類とともに入れてください。故障部品を返送しない場合、HPから部品費用が請求されます。顧客自己修理の際には、HPは送料および部品返送費を全額負担し、使用する宅配便会社や運送会社を指定します。

部品のみ保証サービス

HP保証サービスには、部品のみ保証サービスが適用される場合があります。このサービスでは、交換部品は無償で提供されます。

部品のみ保証サービスにおいては、CSR部品をお客様により交換作業していただくことが必須となります。当該部品について、もしもお客様がHPに交換作業を依頼される場合には、その修理サービスに関する交通費および人件費はお客様の負担となります。

客户自行维修

HP 产品提供许多客户自行维修 (CSR) 部件，以尽可能缩短维修时间和在更换缺陷部件方面提供更大的灵活性。如果在诊断期间 HP（或 HP 服务提供商或服务合作伙伴）确定可以通过使用 CSR 部件完成维修，HP 将直接把该部件发送给您进行更换。有两类 CSR 部件：

- **强制性的** — 要求客户必须自行维修的部件。如果您请求 HP 更换这些部件，则必须为该服务支付差旅费和人工费用。
- **可选的** — 客户可以选择是否自行维修的部件。这些部件也是为客户自行维修设计的。不过，如果您要求 HP 为您更换这些部件，则根据为您的产品指定的保修服务类型，HP 可能收取或不再收取任何附加费用。

注：某些 HP 部件的设计并未考虑客户自行维修。为了满足客户保修的需要，HP 要求授权服务提供商更换相关部件。这些部件在部件图解目录中标记为“否”。

CSR 部件将在下一个工作日发运（取决于备货情况和允许的地理范围）。在允许的地理范围内，可在当天或四小时内发运，但要收取额外费用。如果需要帮助，您可以致电 HP 技术支持中心，将会有技术人员通过电话为您提供帮助。HP 会在随更换的 CSR 部件发运的材料中指明是否必须将有缺陷的部件返还给 HP。如果要求您将有缺陷的部件返还给 HP，那么您必须在规定期限内（通常是五 (5) 个工作日）将缺陷部件发给 HP。有缺陷的部件必须随所提供的发运材料中的相关文件一起返还。如果未能送还有缺陷的部件，HP 可能会要求您支付更换费用。客户自行维修时，HP 将承担所有相关运输和部件返回费用，并指定快递商/承运商。

有关 HP 客户自行维修计划的详细信息，请与您当地的服务提供商联系。有关北美地区的计划，请访问 HP 网站 (http://www.hp.com/go/selfrepair)。

仅部件保修服务

您的 HP 有限保修服务可能涉及仅部件保修服务。根据仅部件保修服务条款的规定，HP 将免费提供更换的部件。

仅部件保修服务要求进行 CSR 部件更换。如果您请求 HP 更换这些部件，则必须为该服务支付差旅费和人工费用。

客戶自行維修

HP 產品設計了許多「客戶自行維修」(CSR) 的零件以減少維修時間，並且使得更換瑕疵零件時能有更大的彈性。如果在診斷期間 HP（或 HP 服務供應商或維修夥伴）辨認出此項維修工作可以藉由使用 CSR 零件來完成，則 HP 將直接寄送該零件給您作更換。CSR 零件分為兩種類別：

- **強制的** — 客戶自行維修所使用的零件是強制性的。如果您要求 HP 更換這些零件，HP 將會向您收取此服務所需的外出費用與勞動成本。
- **選購的** — 客戶自行維修所使用的零件是選購的。這些零件也設計用於客戶自行維修之用。不過，如果您要求 HP 為您更換，則可能需要也可能不需要負擔額外的費用，端視針對此產品指定的保固服務類型而定。

備註：某些 HP 零件沒有消費者可自行維修的設計。為符合客戶保固，HP 需要授權的服務供應商更換零件。這些零件在圖示的零件目錄中，被標示為「否」。

基於材料取得及環境允許的情況下，CSR 零件將於下一個工作日以快遞寄送。在環境的允許下當天或四小時內送達，則可能需要額外的費用。若您需要協助，可致電「HP 技術支援中心」，會有一位技術人員透過電話來協助您。不論損壞的零件是否必須退回，HP 皆會在與 CSR 替換零件一起運送的材料中註明。若要將損壞的零件退回 HP，您必須在指定的一段時間內（通常為五 (5) 個工作天），將損壞的零件寄回 HP。損壞的零件必須與寄送資料中隨附的相關技術文件一併退還。如果無法退還損壞的零件，HP 可能要向您收取替換費用。針對客戶自行維修情形，HP 將負責所有運費及零件退還費用並指定使用何家快遞/貨運公司。

如需 HP 的「客戶自行維修」方案詳細資訊，請連絡您當地的服務供應商。至於北美方案，請參閱 HP 網站 (http://www.hp.com/go/selfrepair)。

僅限零件的保固服務

您的「HP 有限保固」可能包含僅限零件的保固服務。在僅限零件的保固服務情況下，HP 將免費提供替換零件。

針對僅限零件的保固服務，CSR 零件替換是強制性的。如果您要求 HP 更換這些零件，HP 將會向您收取此服務所需的外出費用與勞動成本。

고객 셀프 수리

HP 제품은 수리 시간을 최소화하고 결함이 있는 부품 교체 시 더욱 융통성을 발휘할 수 있도록 하기 위해 고객 셀프 수리(CSR) 부품을 다량 사용하여 설계되었습니다. 진단 기간 동안 HP(또는 HP 서비스 공급업체 또는 서비스 협력업체)에서 CSR 부품을 사용하여 수리가 가능하다고 판단되면 HP는 해당 부품을 바로 사용자에게 보내어 사용자가 교체할 수 있도록 합니다. CSR 부품에는 두 가지 종류가 있습니다.

- **고객 셀프 수리가 의무 사항인 필수 부품.** 사용자가 HP에 이 부품의 교체를 요청할 경우 이 서비스에 대한 출장비 및 작업비가 청구됩니다.
- **고객 셀프 수리가 선택 사항인 부품.** 이 부품들도 고객 셀프 수리가 가능하도록 설계되었습니다. 하지만 사용자가 HP에 이 부품의 교체를 요청할 경우 사용자가 구입한 제품에 해당하는 보증 서비스 유형에 따라 추가 비용 없이 교체가 가능할 수 있습니다.

참고: 일부 HP 부품은 고객 셀프 수리가 불가능하도록 설계되었습니다. HP는 만족스러운 고객 보증을 위해 공인 서비스 제공업체를 통해 부품을 교체하도록 하고 있습니다. 이러한 부품들은 Illustrated Parts Catalog에 "No"라고 표시되어 있습니다.

CSR 부품은 재고 상태와 지리적 조건이 허용하는 경우 다음 영업일 납품이 가능하도록 배송이 이루어집니다. 지리적 조건이 허용하는 경우 추가 비용이 청구되는 조건으로 당일 또는 4시간 배송이 가능할 수도 있습니다. 도움이 필요하시면 HP 기술 지원 센터로 전화하십시오. 전문 기술자가 전화로 도움을 줄 것입니다. HP는 결함이 발생한 부품을 HP로 반환해야 하는지 여부를 CSR 교체 부품과 함께 배송된 자료에 지정합니다. 결함이 발생한 부품을 HP로 반환해야 하는 경우에는 지정된 기간 내(통상 영업일 기준 5일)에 HP로 반환해야 합니다. 이 때 결함이 발생한 부품은 제공된 포장 재료에 넣어 관련 설명서와 함께 반환해야 합니다. 결함이 발생한 부품을 반환하지 않는 경우 HP가 교체 부품에 대해 비용을 청구할 수 있습니다. 고객 셀프 수리의 경우, HP는 모든 운송 및 부품 반환 비용을 부담하며 이용할 운송업체 및 택배 서비스를 결정합니다.

HP 고객 셀프 수리 프로그램에 대한 자세한 내용은 가까운 서비스 제공업체에 문의하십시오. 북미 지역의 프로그램에 대해서는 HP 웹 사이트(http://www.hp.com/go/selfrepair)를 참조하십시오.

부품 제공 보증 서비스

HP 제한 보증에는 부품 제공 보증 서비스가 포함될 수 있습니다. 이러한 경우 HP는 부품 제공 보증 서비스의 조건에 따라 교체 부품만을 무료로 제공합니다.

부품 제공 보증 서비스 제공 시 CSR 부품 교체는 의무 사항입니다. 사용자가 HP에 이 부품의 교체를 요청할 경우 이 서비스에 대한 출장비 및 작업비가 청구됩니다.

Illustrated parts catalog

Mechanical components

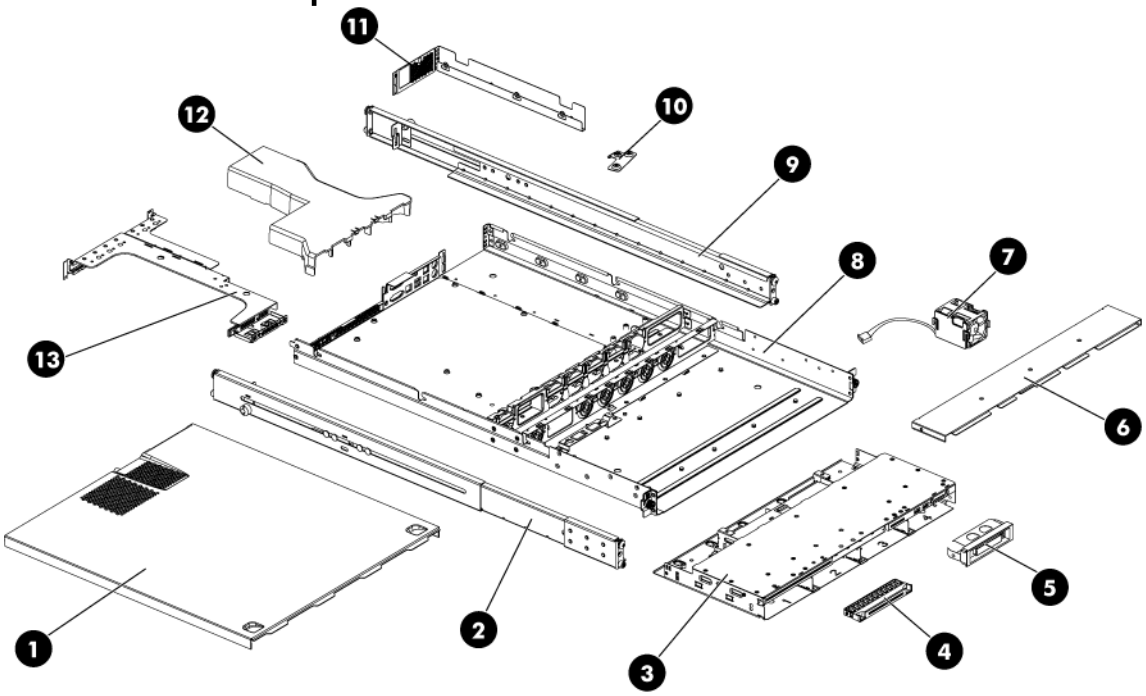

Table 1 Mechanical components spare parts list

Item	Description	Spare part number	Customer self repair
1	Top cover	454347-001	Mandatory[1]
2	Rail kit - left	461513-001	Mandatory[1]
3	Hard drive cage		Mandatory[1]
	Hot Plug Cage Assembly	579224-001	Mandatory
	Non Hot Plug Cage Assembly	462421-001	Mandatory
4	ODD bezel blank	460020-001	Mandatory[1]
5	Hard drive bezel blank	459187-001	Mandatory[1]
6	Top middle cover	469239-001	Mandatory[1]
7	System fan	457873-001	Mandatory[1]
8	Chassis	N/A	Mandatory[1]
9	Rail kit - right	461513-001	Mandatory[1]
10	Front power bracket	536872-001	Mandatory[1]

Table 1 Mechanical components spare parts list

Item	Description	Spare part number	Customer self repair
11	Left power bracket	536871-001	Mandatory[1]
12	Air baffle	457627-001	Mandatory[1]
13	PCI cage	458749-001	Mandatory[1]

[1]Mandatory—Parts for which customer self repair is mandatory. If you request HP to replace these parts, you will be charged for the travel and labor costs of this service.

[2]Optional—Parts for which customer self repair is optional. These parts are also designed for customer self repair. If, however, you require that HP replace them for you, there may or may not be additional charges, depending on the type of warranty service designated for your product.

[3]No—Some HP parts are not designed for customer self repair. In order to satisfy the customer warranty, HP requires that an authorized service provider replace the part. These parts are identified as "No" in the Illustrated Parts Catalog.

[1]Mandatory: Obligatoire—Pièces pour lesquelles la réparation par le client est obligatoire. Si vous demandez à HP de remplacer ces pièces, les coûts de déplacement et main d'œuvre du service vous seront facturés.

[2]Optional: Facultatif—Pièces pour lesquelles la réparation par le client est facultative. Ces pièces sont également conçues pour permettre au client d'effectuer lui-même la réparation. Toutefois, si vous demandez à HP de remplacer ces pièces, l'intervention peut ou non vous être facturée, selon le type de garantie applicable à votre produit.

[3]No: Non—Certaines pièces HP ne sont pas conçues pour permettre au client d'effectuer lui-même la réparation. Pour que la garantie puisse s'appliquer, HP exige que le remplacement de la pièce soit effectué par un Mainteneur Agréé. Ces pièces sont identifiées par la mention “Non” dans le Catalogue illustré.

[1]Mandatory: Obbligatorie—Parti che devono essere necessariamente riparate dal cliente. Se il cliente ne affida la riparazione ad HP, deve sostenere le spese di spedizione e di manodopera per il servizio.

[2]Optional: Opzionali—Parti la cui riparazione da parte del cliente è facoltativa. Si tratta comunque di componenti progettati per questo scopo. Se tuttavia il cliente ne richiede la sostituzione ad HP, potrebbe dover sostenere spese addizionali a seconda del tipo di garanzia previsto per il prodotto.

[3]No: Non CSR—Alcuni componenti HP non sono progettati per la riparazione da parte del cliente. Per rispettare la garanzia, HP richiede che queste parti siano sostituite da un centro di assistenza autorizzato. Tali parti sono identificate da un “No” nel Catalogo illustrato dei componenti.

[1]Mandatory: Zwingend—Teile, die im Rahmen des Customer Self Repair Programms ersetzt werden müssen. Wenn Sie diese Teile von HP ersetzen lassen, werden Ihnen die Versand- und Arbeitskosten für diesen Service berechnet.

[2]Optional: Optional—Teile, für die das Customer Self Repair-Verfahren optional ist. Diese Teile sind auch für Customer Self Repair ausgelegt. Wenn Sie jedoch den Austausch dieser Teile von HP vornehmen lassen möchten, können bei diesem Service je nach den für Ihr Produkt vorgesehenen Garantiebedingungen zusätzliche Kosten anfallen.

[3]No: Kein—Einige Teile sind nicht für Customer Self Repair ausgelegt. Um den Garantieanspruch des Kunden zu erfüllen, muss das Teil von einem HP Servicepartner ersetzt werden. Im illustrierten Teilekatalog sind diese Teile mit „No" bzw. „Nein" gekennzeichnet.

[1]Mandatory: Obligatorio—componentes para los que la reparación por parte del usuario es obligatoria. Si solicita a HP que realice la sustitución de estos componentes, tendrá que hacerse cargo de los gastos de desplazamiento y de mano de obra de dicho servicio.

[2]Optional: Opcional— componentes para los que la reparación por parte del usuario es opcional. Estos componentes también están diseñados para que puedan ser reparados por el usuario. Sin embargo, si precisa que HP realice su sustitución, puede o no conllevar costes adicionales, dependiendo del tipo de servicio de garantía correspondiente al producto.

[3]No: No—Algunos componentes no están diseñados para que puedan ser reparados por el usuario. Para que el usuario haga valer su garantía, HP pone como condición que un proveedor de servicios autorizado realice la sustitución de estos componentes. Dichos componentes se identifican con la palabra "No" en el catálogo ilustrado de componentes.

[1]Mandatory: Verplicht—Onderdelen waarvoor Customer Self Repair verplicht is. Als u HP verzoekt deze onderdelen te vervangen, komen de reiskosten en het arbeidsloon voor uw rekening.

[2]Optional: Optioneel—Onderdelen waarvoor reparatie door de klant optioneel is. Ook deze onderdelen zijn ontworpen voor reparatie door de klant. Als u echter HP verzoekt deze onderdelen voor u te vervangen, kunnen daarvoor extra kosten in rekening worden gebracht, afhankelijk van het type garantieservice voor het product.

[3]No: Nee—Sommige HP onderdelen zijn niet ontwikkeld voor reparatie door de klant. In verband met de garantievoorwaarden moet het onderdeel door een geautoriseerde Service Partner worden vervangen. Deze onderdelen worden in de geïllustreerde onderdelencatalogus aangemerkt met "Nee".

[1]Mandatory: Obrigatória—Peças cujo reparo feito pelo cliente é obrigatório. Se desejar que a HP substitua essas peças, serão cobradas as despesas de transporte e mão-de-obra do serviço.

[2]Optional: Opcional—Peças cujo reparo feito pelo cliente é opcional. Essas peças também são projetadas para o reparo feito pelo cliente. No entanto, se desejar que a HP as substitua, pode haver ou não a cobrança de taxa adicional, dependendo do tipo de serviço de garantia destinado ao produto.

[3]No: Nenhuma—Algumas peças da HP não são projetadas para o reparo feito pelo cliente. A fim de cumprir a garantia do cliente, a HP exige que um técnico autorizado substitua a peça. Essas peças estão identificadas com a marca "No" (Não), no catálogo de peças ilustrado.

[1]Mandatory：必須 - 顧客自己修理が必須の部品。当該部品について、もしもお客様がHPに交換作業を依頼される場合には、その修理サービスに関する交通費および人件費がお客様に請求されます。

[2]Optional：任意 - 顧客自己修理が任意である部品。この部品も顧客自己修理用です。当該部品について、もしもお客様がHPに交換作業を依頼される場合には、お買い上げの製品に適用される保証サービス内容の範囲内においては、費用を負担していただくことなく保証サービスを受けることができます。

[3]No：除外 - HP製品の一部の部品は、顧客自己修理用ではありません。製品の保証を継続するためには、HPまたはHP正規保守代理店による交換作業が必須となります。部品カタログには、当該部品が顧客自己修理除外品である旨が記載されています。

[1]Mandatory: 强制性的 — 要求客户必须自行维修的部件。如果您请求 HP 更换这些部件，则必须为该服务支付差旅费和人工费用。

[2]Optional: 可选的 — 客户可以选择是否自行维修的部件。这些部件也是为客户自行维修设计的。不过，如果您要求 HP 为您更换这些部件，则根据为您的产品指定的保修服务类型，HP 可能收取或不再收取任何附加费用。

[3]No: 否 — 某些 HP 部件的设计并未考虑客户自行维修。为了满足客户保修的需要，HP 要求授权服务提供商更换相关部件。这些部件在部件图解目录中标记为“否”。

[1]Mandatory: 強制的 — 客戶自行維修所使用的零件是強制性的。如果您要求 HP 更換這些零件，HP 將會向您收取此服務所需的外出費用與勞動成本。

[2]Optional: 選購的 — 客戶自行維修所使用的零件是選購的。這些零件也設計用於客戶自行維修之用。不過，如果您要求 HP 為您更換，則可能需要也可能不需要負擔額外的費用，端視針對此產品指定的保固服務類型而定。

[3]No: 否 — 某些 HP 零件沒有消費者可自行維修的設計。為符合客戶保固，HP 需要授權的服務供應商更換零件。這些零件在圖示的零件目錄中，被標示為「否」。

[1] Mandatory: 필수 — 고객 셀프 수리가 의무 사항인 필수 부품. 사용자가 HP에 이 부품의 교체를 요청할 경우 이 서비스에 대한 출장비 및 작업비가 청구됩니다.

[2] Optional: 옵션 — 고객 셀프 수리가 선택 사항인 부품. 이 부품들도 고객 셀프 수리가 가능하도록 설계되었습니다. 하지만 사용자가 HP에 이 부품의 교체를 요청할 경우 사용자가 구입한 제품에 해당하는 보증 서비스 유형에 따라 추가 비용 없이 교체가 가능할 수 있습니다.

[3] No: No — 고객 셀프 수리가 불가능하도록 설계된 HP 부품. 이 부품들은 고객 셀프 수리가 불가능하도록 설계되었습니다. HP는 고객 보증을 만족시키기 위해 공인 서비스 제공업체를 통해 부품을 교체하도록 하고 있습니다.

System components with non-hot-plug HDD

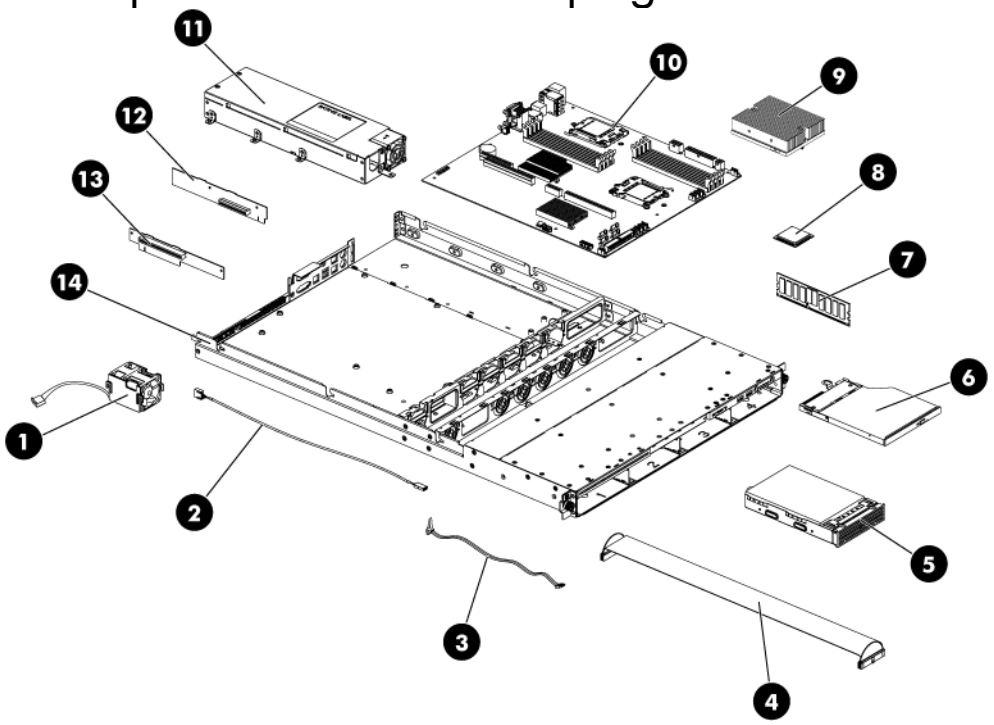

Table 2 System Components Spare Parts List

Item	Description	Spare Part Number	Customer Self Repair
1	System Fan	457873-001	Mandatory[1]
2	Cable Assy USB	452338-001	Mandatory[1]
3	Cable SATA 250mm	452333-001	Mandatory[1]
4	Cable IDE ODD	454356-001	Mandatory[1]
5	NHP LFF Fixed HDD Carrier	460022-001	Mandatory[1]
6	Optical Disc Drive (ODD)		Mandatory[1]
	SPS-DRV,9.5mm,DVD-ROM,ROHS	462484-001	Mandatory[1]
	SPS-DRV,9.5mm COMBO,ROHS	462485-001	Mandatory[1]
7	Memory Module		Mandatory[1]
	SPS-DIMM, 1GB PC2-6400,128Mx8, RoHS	501156-001	Mandatory[1]
	SPS-DIMM, 2GB PC2-6400,256Mx4, RoHS	501157-001	Mandatory[1]
	SPS-DIMM, 4GB PC2-6400,256Mx4, RoHS	501158-001	Mandatory[1]
	SPS-DIMM, 4GB PC2-6400, 256Mx4, LP	504589-001	Mandatory[1]
	SPS-DIMM, 8GB, REG PC2-5300,512MX4	514216-001	Mandatory[1]
8	Processors, Istanbul Series		Mandatory[1]
	SPS-PROC, ISTNBL 2423 2.0 GHz 6M 55W	572550-001	Mandatory[1]
	SPS-PROC, ISTNBL 2425 2.1 GHz 6M 55W	572549-001	Mandatory[1]

Table 2 System Components Spare Parts List

Item	Description	Spare Part Number	Customer Self Repair
	SPS-PROC, ISTNBL 2427 2.2 GHz 6M 75W	573871-001	Mandatory[1]
	SPS-PROC ISTNBL 2431 2.4 GHz 6M 75W	575257-001	Mandatory[1]
	SPS-PROC, ISTNBL 2435 2.6 GHz 6M 75W	573870-001	Mandatory[1]
9	Processor Heat Sink	452332-001	Mandatory[1]
10	System Board	581769-001	Mandatory[1]
11	500-W Power Supply	506247-001	Mandatory[1]
12	HL/HH PCIe x8 LP Riser Card	452335-001	Mandatory[1]
13	FL/FH PCIe x16 Riser Card	457871-001	Mandatory[1]
14	Chassis	N/A	Mandatory[1]

System components with hot-plug HDD

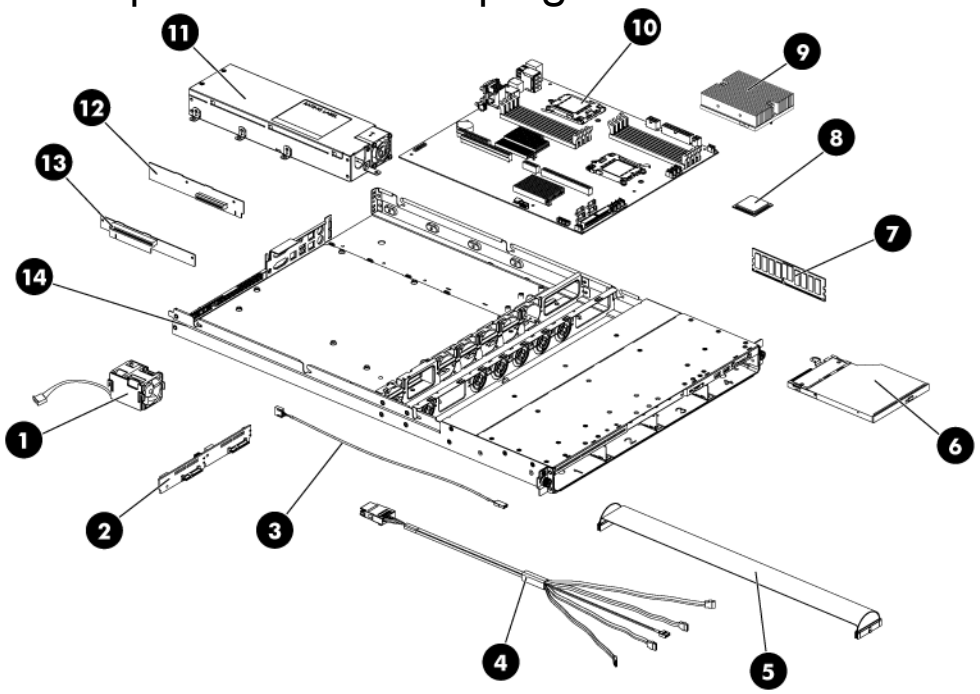

Table 3 System Components Spare Parts List

Item	Description	Spare Part Number	Customer Self Repair
1	System Fan	457873-001	Mandatory[1]
2	Backplane two bays SAS/SATA Hard Drive	452340-001	Mandatory[1]
3	Cable Assy USB	452338-001	Mandatory[1]
4	CA ASSY,4 SATA TO MINI-SAS	580751-001	Mandatory[1]
5	Cable IDE ODD	454356-001	Mandatory[1]

Table 3 System Components Spare Parts List

Item	Description	Spare Part Number	Customer Self Repair
6	Optical Disc Drive (ODD)		Mandatory[1]
	SPS-DRV,9.5mm,DVD-ROM,ROHS	462484-001	Mandatory[1]
	SPS-DRV,9.5mm COMBO,ROHS	462485-001	Mandatory[1]
7	Memory Module		Mandatory[1]
	SPS-DIMM, 1GB PC2-6400,128Mx8, RoHS	501156-001	Mandatory[1]
	SPS-DIMM, 2GB PC2-6400,256Mx4, RoHS	501157-001	Mandatory[1]
	SPS-DIMM, 4GB PC2-6400,256Mx4, RoHS	501158-001	Mandatory[1]
	SPS-DIMM, 4GB PC2-6400, 256Mx4, LP	504589-001	Mandatory[1]
	SPS-DIMM, 8GB, REG PC2-5300,512MX4	514216-001	Mandatory[1]
8	Processors , Istanbul Series		Mandatory[1]
	SPS-PROC, ISTNBL 2423HE 2.0 GHz 6M 55W	572550-001	Mandatory[1]
	SPS-PROC, ISTNBL 2425HE 2.1 GHz 6M 55W	572549-001	Mandatory[1]
	SPS-PROC, ISTNBL 2427 2.2 GHz 6M 75W	573871-001	Mandatory[1]
	SPS-PROC ISTNBL 2431 2.4 GHz 6M 75W	575257-001	Mandatory[1]
	SPS-PROC, ISTNBL 2435 2.6 GHz 6M 75W	573870-001	Mandatory[1]
9	Processor Heat Sink	452332-001	Mandatory[1]
10	System Board	581769-001	Mandatory[1]
11	500-W Power Supply	506247-001	Mandatory[1]
12	HL/HH PCIe x8 LP Riser Card	452335-001	Mandatory[1]
13	FL/FH PCIe x16 Riser Card	457871-001	Mandatory[1]
14	Chassis	N/A	Mandatory[1]

[1]Mandatory—Parts for which customer self repair is mandatory. If you request HP to replace these parts, you will be charged for the travel and labor costs of this service.

[2]Optional—Parts for which customer self repair is optional. These parts are also designed for customer self repair. If, however, you require that HP replace them for you, there may or may not be additional charges, depending on the type of warranty service designated for your product.

[3]No—Some HP parts are not designed for customer self repair. In order to satisfy the customer warranty, HP requires that an authorized service provider replace the part. These parts are identified as "No" in the Illustrated Parts Catalog.

[1]Mandatory: Obligatoire—Pièces pour lesquelles la réparation par le client est obligatoire. Si vous demandez à HP de remplacer ces pièces, les coûts de déplacement et main d'œuvre du service vous seront facturés.

[2]Optional: Facultatif—Pièces pour lesquelles la réparation par le client est facultative. Ces pièces sont également conçues pour permettre au client d'effectuer lui-même la réparation. Toutefois, si vous

demandez à HP de remplacer ces pièces, l'intervention peut ou non vous être facturée, selon le type de garantie applicable à votre produit.

[3]No: Non—Certaines pièces HP ne sont pas conçues pour permettre au client d'effectuer lui-même la réparation. Pour que la garantie puisse s'appliquer, HP exige que le remplacement de la pièce soit effectué par un Mainteneur Agréé. Ces pièces sont identifiées par la mention “Non” dans le Catalogue illustré.

[1]Mandatory: Obbligatorie—Parti che devono essere necessariamente riparate dal cliente. Se il cliente ne affida la riparazione ad HP, deve sostenere le spese di spedizione e di manodopera per il servizio.

[2]Optional: Opzionali—Parti la cui riparazione da parte del cliente è facoltativa. Si tratta comunque di componenti progettati per questo scopo. Se tuttavia il cliente ne richiede la sostituzione ad HP, potrebbe dover sostenere spese addizionali a seconda del tipo di garanzia previsto per il prodotto.

[3]No: Non CSR—Alcuni componenti HP non sono progettati per la riparazione da parte del cliente. Per rispettare la garanzia, HP richiede che queste parti siano sostituite da un centro di assistenza autorizzato. Tali parti sono identificate da un “No” nel Catalogo illustrato dei componenti.

[1]Mandatory: Zwingend—Teile, die im Rahmen des Customer Self Repair Programms ersetzt werden müssen. Wenn Sie diese Teile von HP ersetzen lassen, werden Ihnen die Versand- und Arbeitskosten für diesen Service berechnet.

[2]Optional: Optional—Teile, für die das Customer Self Repair-Verfahren optional ist. Diese Teile sind auch für Customer Self Repair ausgelegt. Wenn Sie jedoch den Austausch dieser Teile von HP vornehmen lassen möchten, können bei diesem Service je nach den für Ihr Produkt vorgesehenen Garantiebedingungen zusätzliche Kosten anfallen.

[3]No: Kein—Einige Teile sind nicht für Customer Self Repair ausgelegt. Um den Garantieanspruch des Kunden zu erfüllen, muss das Teil von einem HP Servicepartner ersetzt werden. Im illustrierten Teilekatalog sind diese Teile mit „No“ bzw. „Nein“ gekennzeichnet.

[1]Mandatory: Obligatorio—componentes para los que la reparación por parte del usuario es obligatoria. Si solicita a HP que realice la sustitución de estos componentes, tendrá que hacerse cargo de los gastos de desplazamiento y de mano de obra de dicho servicio.

[2]Optional: Opcional— componentes para los que la reparación por parte del usuario es opcional. Estos componentes también están diseñados para que puedan ser reparados por el usuario. Sin embargo, si precisa que HP realice su sustitución, puede o no conllevar costes adicionales, dependiendo del tipo de servicio de garantía correspondiente al producto.

[3]No: No—Algunos componentes no están diseñados para que puedan ser reparados por el usuario. Para que el usuario haga valer su garantía, HP pone como condición que un proveedor de servicios autorizado realice la sustitución de estos componentes. Dichos componentes se identifican con la palabra “No” en el catálogo ilustrado de componentes.

[1]Mandatory: Verplicht—Onderdelen waarvoor Customer Self Repair verplicht is. Als u HP verzoekt deze onderdelen te vervangen, komen de reiskosten en het arbeidsloon voor uw rekening.

[2]Optional: Optioneel—Onderdelen waarvoor reparatie door de klant optioneel is. Ook deze onderdelen zijn ontworpen voor reparatie door de klant. Als u echter HP verzoekt deze onderdelen

voor u te vervangen, kunnen daarvoor extra kosten in rekening worden gebracht, afhankelijk van het type garantieservice voor het product.

[3]No: Nee—Sommige HP onderdelen zijn niet ontwikkeld voor reparatie door de klant. In verband met de garantievoorwaarden moet het onderdeel door een geautoriseerde Service Partner worden vervangen. Deze onderdelen worden in de geïllustreerde onderdelencatalogus aangemerkt met "Nee".

[1]Mandatory: Obrigatória—Peças cujo reparo feito pelo cliente é obrigatório. Se desejar que a HP substitua essas peças, serão cobradas as despesas de transporte e mão-de-obra do serviço.

[2]Optional: Opcional—Peças cujo reparo feito pelo cliente é opcional. Essas peças também são projetadas para o reparo feito pelo cliente. No entanto, se desejar que a HP as substitua, pode haver ou não a cobrança de taxa adicional, dependendo do tipo de serviço de garantia destinado ao produto.

[3]No: Nenhuma—Algumas peças da HP não são projetadas para o reparo feito pelo cliente. A fim de cumprir a garantia do cliente, a HP exige que um técnico autorizado substitua a peça. Essas peças estão identificadas com a marca “No” (Não), no catálogo de peças ilustrado.

HP Contact Information

For the name of the nearest HP authorized reseller:

- In the United States, call 1-800-345-1518.
- In Canada, call 1-800-263-5868.
- In other locations, refer to the HP website at **http://www.hp.com/**.

For HP technical support:

- In North America:
  - Call 1-800-HP-INVENT (1-800-474-6836). This service is available 24 hours a day, 7 days a week. For continuous quality improvement, calls may be recorded or monitored.
  - If you have purchased a Care Pack (service upgrade), call 1-800-633-3600. For more information about Care Packs, refer to the HP website at **http://www.hp.com/**.
- Outside North America, call the nearest HP Technical Support Phone Center. For telephone numbers for worldwide Technical Support Centers, refer to the HP website at **http://www.hp.com/**.

Before You Contact HP

Be sure to have the following information available before you call HP:

- Technical support registration number (if applicable)
- Products serial number
- Products model name and number
- Applicable error messages
- Add-on boards or hardware model number and serial number
- Third-party hardware or software model number
- Operating system type and revision level

Connectors, Switches, and LEDs

This chapter contains illustrations and tables identifying and describing the connectors, switches, buttons, and LED indicators located on the front panel, rear panel, system board and hard drives of the HP ProLiant DL165 G6 server.

Connectors and Components

Front Panel Components

Figure 1 Front panel components

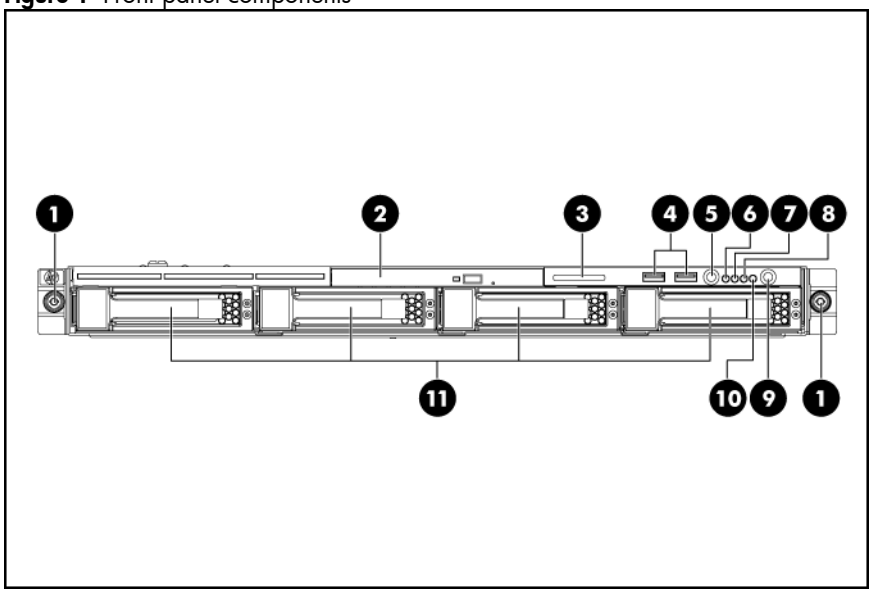

Item	Description
1	Thumbscrews for rack mounting
2	Optical disk drive bay
3	Serial number pull tab
4	Two front USB 2.0 ports
5	Unit identification (UID) LED button
6	System health LED
7	NIC1 LED
8	NIC2 LED
9	Power button with LED indicator (bicolor: green and amber)
10	HDD LED
11	Hard disk drive (HDD) bays 1, 2, 3, and 4

Rear panel components

Figure 2 Rear panel components

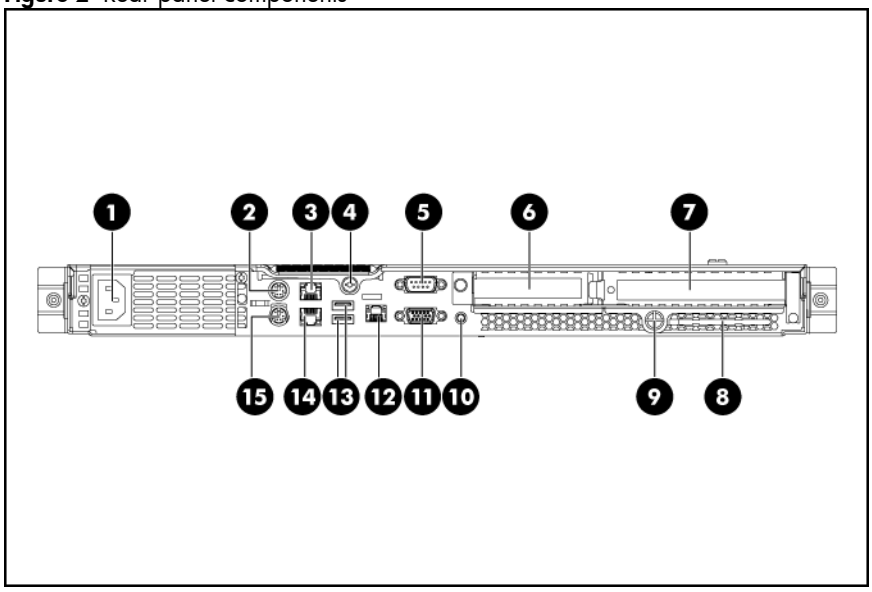

Item	Description
1	Power supply cable socket
2	PS/2 mouse port (green)
3	GbE LAN port for NIC2
4	Captive thumbscrew for top cover
5	Serial port (teal)
6	Low profile/Half length expansion slot
7	Full Height/Full Length expansion slot
8	T10/T15 Wrench
9	Thumbscrew for PCI cage
10	UID LED button
11	VGA port
12	HP LO100i Management LAN Port
13	Two rear USB 2.0 ports
14	GbE LAN port for NIC1
15	PS/2 keyboard port (purple)

System board components

Figure 3 System board components

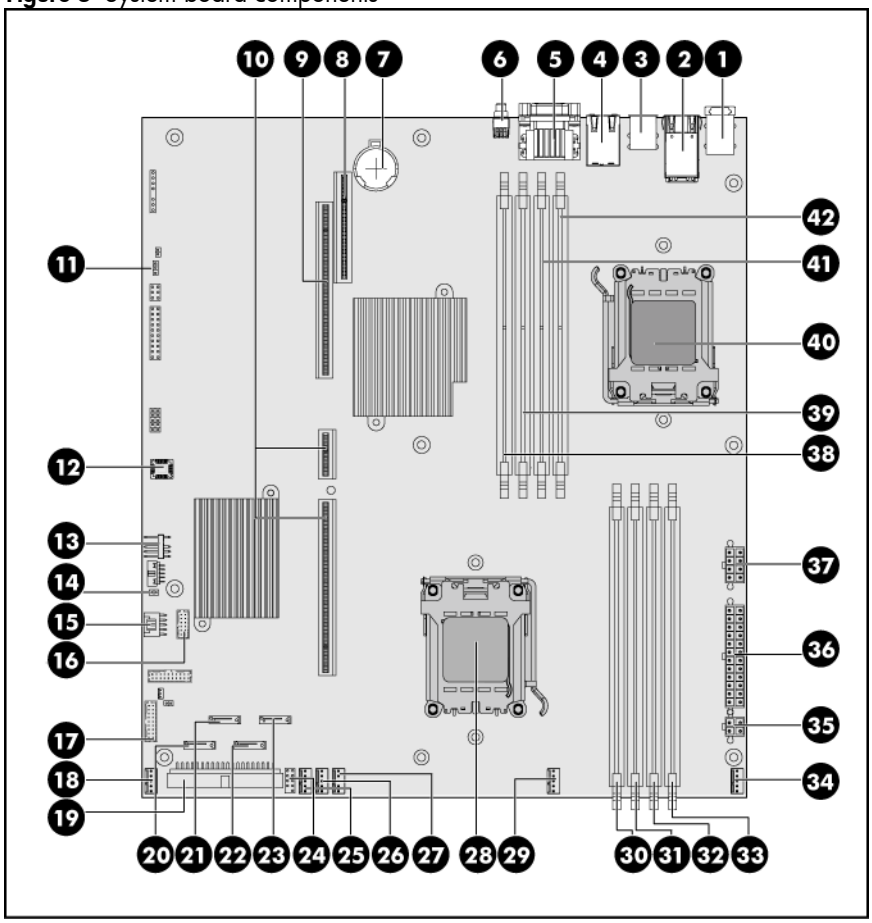

Item	Designator	Description
1	J22	Top: PS/2 mouse port Bottom: PS/2 keyboard port
2	NIC2	Top: LAN port 2 Bottom: LAN port 1
3	J16	Top: USB 2.0 port Bottom: USB 2.0 port
4	CN21	Management port
5	CN20	Top: Serial port Bottom: VGA port
6	SW6	UID LED/button
7	XBT1	3V CMOS battery
8	J19	PCIe slot (PCIe-x4 link with x8 slot)
9	J33	PCIe slot (PCIe-x16 link with x16 slot)
10	J24,J23	HTX slot

Item	Designator	Description
11	P26	Chassis ID jumper
12	XU3	BIOS socket
13	J21	Internal USB connector
14	P20	Password jumper
15	J20	PSMI
16	J1	RPS
17	P10	18-Pin front panel port
18	P19	5-Pin system fan 6 header
19	P25	IDE channel
20	SATA1	SATA1 connector
21	SATA2	SATA2 connector
22	SATA3	SATA3 connector
23	SATA4	SATA4 connector
24	P11	Front USB 2.0 cable header
25	P17	5-Pin system fan 5 header
26	P15	5-Pin system fan 4 header
27	P13	5-Pin system fan 3 header
28	XU2	Processor 1 socket
29	P18	5-Pin system fan 2 header
30	J11	DDRII slots for Processor 1
31	J12	DDRII slots for Processor 1
32	J13	DDRII slots for Processor 1
33	J14	DDRII slots for Processor 1
34	P12	5-Pin system fan1 header
35	P24	4-pin power connector
36	P21	24-pin power connector
37	P23	8-pin power connector
38	J10	DDRII slots for Processor 0
39	J9	DDRII slots for Processor 0
40	XU1	Processor 0 socket
41	J8	DDRII slots for Processor 0
42	J7	DDRII slots for Processor 0

Jumpers – Password and Chassis ID

The system board password (P20) chassis ID1(P26) and chassis ID2(P27) jumpers. Table 4 describes the jumper settings.

Table 4 System configuration switch settings

Jumper	Status
P20	1-2, password enable
P26	1-2, default setting
P27	2-3, default setting

System Switches

NMI button (SW5)

If the system crashes or stops operating, you can momentary press the NMI button (SW5) to manually force the server to issue a Non-Maskable Interrupt (NMI). This will perform a memory dump—writing the contents in the server's CPU registers and system memory to a network server or to diskettes. This memory dump can later be analyzed to determine the cause of the problem. By default, the NMI switch is always disabled.

Figure 4 NMI button

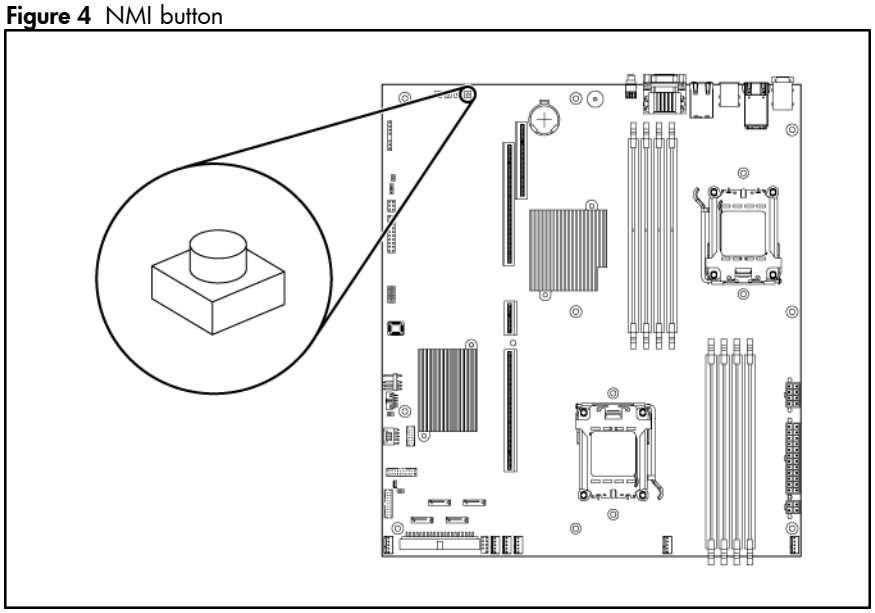

NOTE: Use of the NMI button is not supported in all NOS. As of the present, NMI implementation is not available for systems running on Solaris and Linux operating systems.

Clear CMOS Button (SW4)

The system board has a system configuration (CMOS) button (SW4). To clear system configuration, remove power cord and press the CMOS button for seconds.

LED Indicators

This section contains illustration and descriptions of internal and external status LED indicators located on the:

- Front panel
- Rear panel
- System board

These LED indicators aid in problem diagnosis by indicating the status of system components and operations of the server.

Front panel LED indicators

The front panel LED indicators allow constant monitoring of basic system functions while the server is operating.

Optical drive activity LED indicator

The optical drive has an activity indicator that indicates when the drive is reading media.

Figure 5 Optical drive activity LED indicator

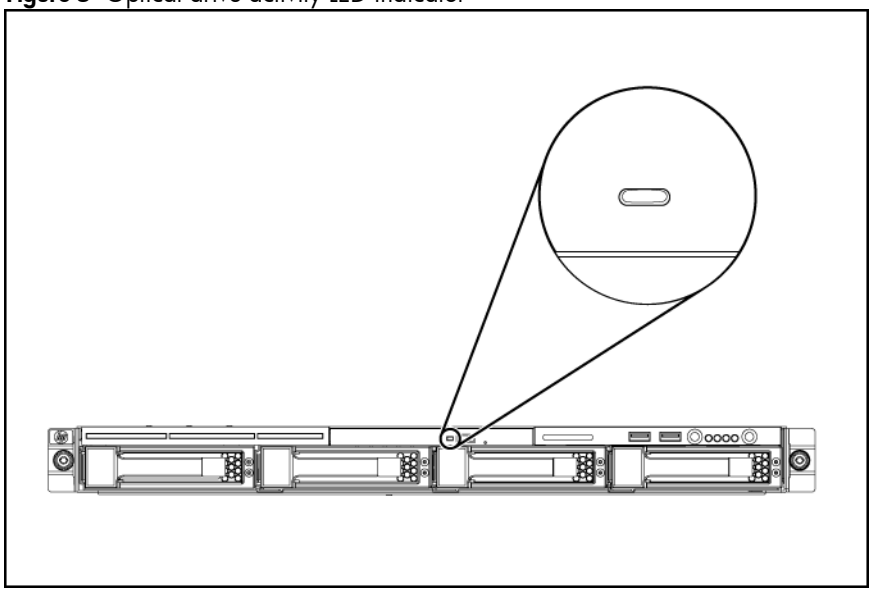

Activity states for the optical drive are as follows:

- Flashing green – Ongoing drive activity
- Off – No drive activity

Power LED Indicator

The power status of the server is indicated by the bicolor LED on the front panel.

Figure 6 Power LED indicator location

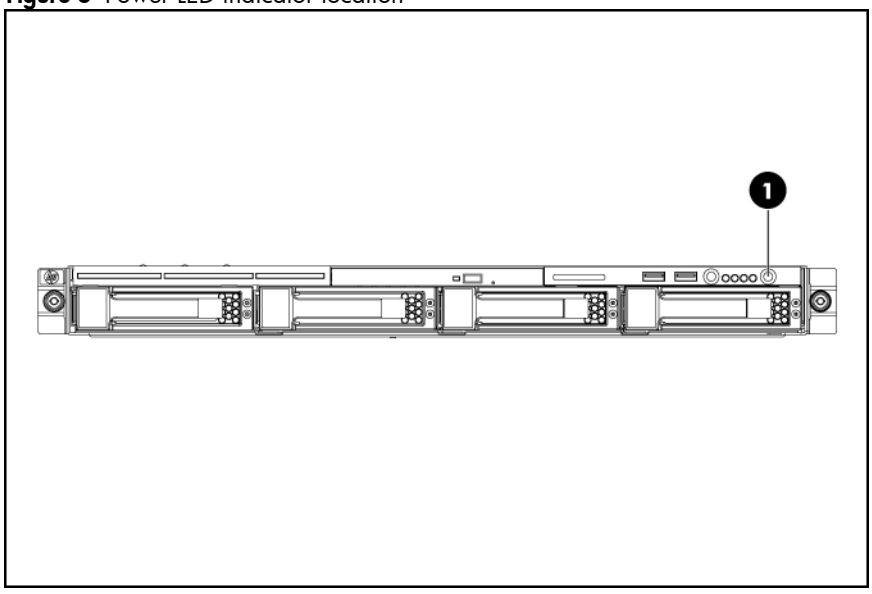

Table 5 Power LED indicator status

Component	Status	Description
Power LED indicator	Steady green	The server is operating normally.
	Steady Amber	The server is system off or in hibernation with A/C power.
	Off	The server is system off without A/C power.

Hard drive activity LED indicator

The status of hard drives installed in the server is indicated by the drive activity LED indicator located on the front panel of the server.

Figure 7 Drive activity LED indicator

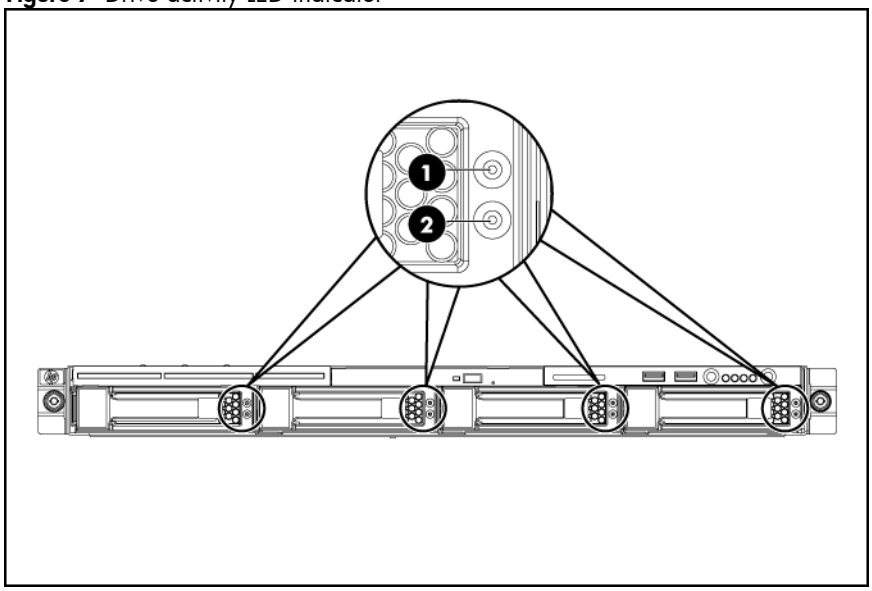

Table 6 Hard drive activity LED indicator status

Item	LED indicator	Status	Description
1	Drive activity LED indicator	Forced off (override drive activity output)	• The drive is not a member of any RAID volumes; or the drive is configured but is in a replacement or failed state for at least one volume that it is a member of; or the drive is a spare drive that is inactive or has been activated but has not been rebuilt. • The drive is not rebuilding. • The drive is not a member of a volume undergoing capacity expansion or RAID migration.
		Solid green	• The drive is a member of a RAID volume. • The drive is not an inactive spare drive. • The drive is not in a replacement or failed state for any volumes that it is a member of. • The drive is not currently performing any I/O activity.

Table 6 Hard drive activity LED indicator status

Item	LED indicator	Status	Description
		Flashing green during a drive activity (if command is outstanding continually the indicator is forced to flash at 4 Hz 50% duty cycle instead of solid off)	• The drive is currently performing an I/O activity. • The drive is a member of a RAID volume. • The drive is not in a replacement or failed state for any volumes that it is a member of (drive is online). • The drive is not rebuilding. • The drive is not a member of a volume undergoing capacity expansion or RAID migration.
		Flashing green @ 1 Hz 50% duty cycle (override drive activity output)	• The drive is rebuilding. • The drive is a member of a volume undergoing capacity expansion or RAID migration.
2	Drive Online/Error LED indicator	Off	• The drive is not in a failed state. • The drive is not selected (unit identification).
		Solid blue	• The drive is not in a failed state. • The drive is selected (unit identification)
		Solid amber	• The drive is in a failed state. • The drive is not selected.
		Flashing amber @ 1 Hz 50% duty cycle	• The drive is in a predictive failure state. • The drive is not in a failed state. • The drive is not selected.
		Flashing amber/blue @ 1 Hz 50% duty cycle	• The drive is in a failed or predictive failure state. • The drive is selected.

Rear panel LED indicators

The LAN port on the rear panel has two LED indicators that allow monitoring of network activity.

Figure 8 LAN/LED indicators location

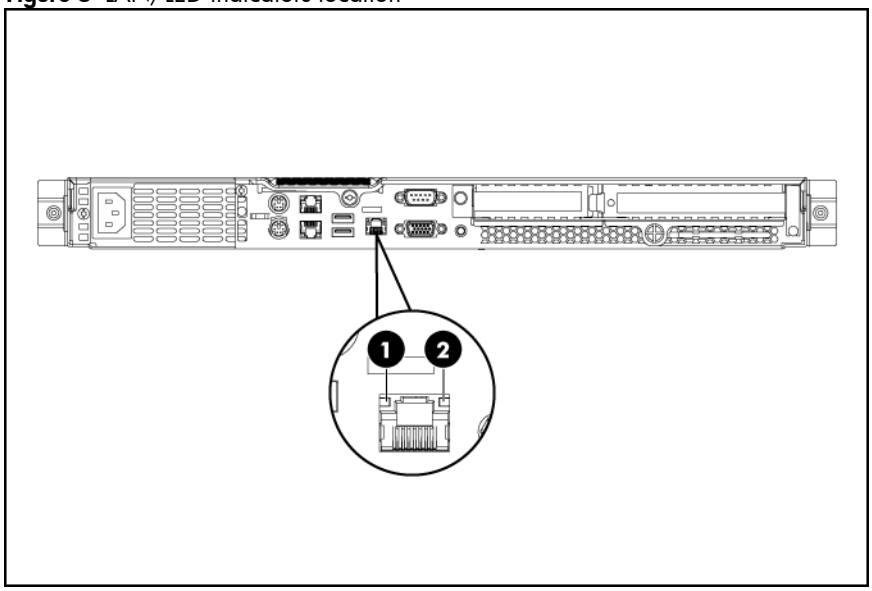

Table 7 LAN/LED indicator states

Item	Component	Status	Description
1	LAN activity status LED indicator	Flashing green	Ongoing network data activity.
		Off	No network data activity or no connection.
2	LAN network speed LED indicator	Steady green	The LAN connection is using a GbE link.
		Steady amber	The LAN connection is using 10Mbps/100 Mbps link.
		Off	No connection.

System board LED indicator

The system board contains one LED indicator for use during troubleshooting operations.

Figure 9 System board LED indicator

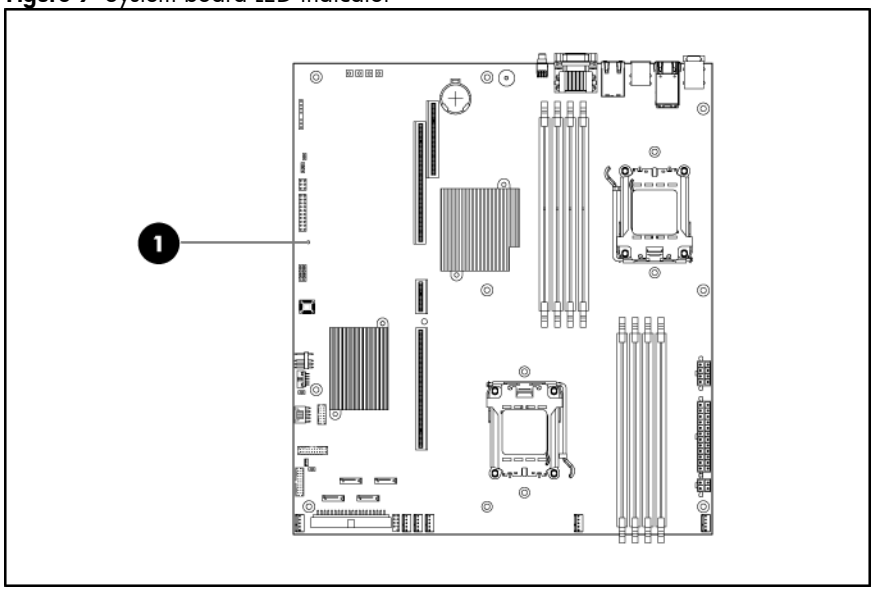

Table 8 System board LED indicator

Item	Component	Status	Description
1	LED indicator	Green	System state show

Removal and Replacement Procedures

This chapter provides subassembly/module-level removal and replacement procedures for the HP ProLiant DL165 G6 server.

Review the specifications of a new component before installing it to make sure it is compatible with the server. When you integrate new components into the system, record its model and serial number, and any other pertinent information for future reference. After completing any removal or replacement procedure, run the diagnostics program to verify that all components operate properly.

NOTE: The figures used in this chapter to illustrate procedural steps are labeled numerically (i.e., 1, 2…). When these figures are used in substep items, the alphabetically labeled instructions correspond to the numbered labels on the related figure (i.e., label 1 corresponds to step a, label 2 corresponds to step b, etc.). The procedures described in this section assume that the server is out of the rack and is positioned on a flat, stable surface.

Hardware Configuration Tools

You will need the following tools:

- T-10/T-15 screwdrivers
- Flat-blade screwdriver

The following references and software tools will assist with the hardware configuration:

- HP ProLiant DL165 G6 Server Support CD
- IPMI Event Log
- Diagnostics Software

Hardware Configuration Information

Electrostatic Discharge Information

An electrostatic discharge (ESD) can damage static-sensitive devices or microcircuitry. Proper packaging and grounding techniques are necessary precautions to prevent damage. To prevent electrostatic damage, observe the following precautions:

- Transport products in static-safe containers such as conductive tubes, bags, or boxes.
- Keep electrostatic-sensitive parts in their containers until they arrive at static-free stations.
- Cover workstations with approved static-dissipating material. Use a wrist strap connected to the work surface, and properly grounded (earthed) tools and equipment.
- Keep work area free of nonconductive materials, such as ordinary plastic assembly aids and foam packing.
- Make sure that you are always properly grounded (earthed) when touching a static-sensitive component or assembly.
- Avoid touching pins, leads, or circuitry.
- Always place drives with the Printed Circuit Board (PCB) assembly-side down.

- Use conductive field service tools.

Pre-Installation Procedure

Perform the steps below before you open the server or before you remove or replace any component.

WARNING: Failure to properly turn off the server before you open the server or before your start installing/ removing components may cause serious damage as well as bodily harm.

1. Turn off the server and all the peripherals connected to it.
2. Unplug all cables from the power outlets to avoid exposure to high energy levels that may cause burns when parts are short-circuited by metal objects such as tools or jewelry.

   If necessary, label each one to expedite reassembly.
3. Disconnect telecommunication cables to avoid exposure to shock hazard from ringing voltages.
4. If server is installed in a rack, remove server and place it on a flat surface.
5. Remove the top cover according to the instructions described in the System Covers section in this chapter.
6. Remove the top middle cover according to the instructions described in the System Covers section in this chapter.
7. Follow the ESD precautions listed previously in this chapter when handling a server component.

IMPORTANT: To streamline the configuration process, read through the entire installation/removal procedure first and make sure you understand them before you begin.

Post-installation instructions

Observe the following items after installing or removing a server component:

1. Be sure all components are installed according to the described step-by-step instructions.
2. Reinstall the rear cage, air baffle, peripherals, and system cables that you have removed.
3. Reinstall the top cover.
4. Reinstall the top middle cover.
5. Reinstall server into rack.
6. Connect all external cables and the AC power cord to the system.
7. Press the power button on the front panel to turn on the server.

Server Warnings and Cautions

Before installing a server, be sure that you understand the following warnings and cautions.

WARNING: To reduce the risk of electric shock or damage to the equipment:

- Do not disable the power cord grounding plug. The grounding plug is an important safety feature.
- Plug the power cord into a grounded (earthed) electrical outlet that is easily accessible at all times.
- Unplug the power cord from the power supply to disconnect power to the equipment.
- Do not route the power cord where it can be walked on or pinched by items placed against it. Pay particular attention to the plug, electrical outlet, and the point where the cord extends from the server.

⚠ **WARNING:** To reduce the risk of personal injury from hot surfaces, allow the drives and the internal system components to cool before touching them.

△ **CAUTION:** Do not operate the server for long periods with the access panel open or removed. Operating the server in this manner results in improper airflow and improper cooling that can lead to thermal damage.

Symbols on Equipment

The following symbols may be placed on equipment to indicate the presence of potentially hazardous conditions.



This symbol indicates the presence of hazardous energy circuits or electric shock hazards. Refer all servicing to qualified personnel.

WARNING: To reduce the risk of injury from electric shock hazards, do not open this enclosure. Refer all maintenance, upgrades, and servicing to qualified personnel.



This symbol indicates the presence of electric shock hazards. The area contains no user or field serviceable parts. Do not open for any reason.

WARNING: To reduce the risk of injury from electric shock hazards, do not open this enclosure.



This symbol on an RJ-45 receptacle indicates a network interface connection.

WARNING: To reduce the risk of electric shock, fire, or damage to the equipment, do not plug telephone or telecommunications connectors into this receptacle.



This symbol indicates the presence of a hot surface or hot component. If this surface is contacted, the potential for injury exists.

WARNING: To reduce the risk of injury from a hot component, allow the surface to cool before touching.



weight1_kg
weight1_lb

This symbol indicates that the component exceeds the recommended weight for one individual to handle safely.

WARNING: To reduce the risk of personal injury or damage to the equipment, observe local occupational health and safety requirements and guidelines for manual material handling.



These symbols, on power supplies or systems, indicate that the equipment is supplied by multiple sources of power.

WARNING: To reduce the risk of injury from electric shock, remove all power cords to completely disconnect power from the system.

Powering Down the Server

The server does not completely power down when the power button on the front panel is pressed. The button toggles between On and Standby. The standby position removes power from most electronics and the drives, but some internal circuitry remains active. To completely remove all power from the system, disconnect all power cords from the server.

To power down the server:

1. Shut down server as directed by the operating system documentation.
2. Press the power button to toggle to Standby.

   This places the server in standby mode changing the power LED indicator to amber. In this mode, the main power supply output is disabled. Standby does not completely disable or remove power from the system.
3. Disconnect the AC power cord from the AC outlet and then from the server.
4. Be sure that the power LED indicator is turned off and that the fan noise has stopped.
5. Disconnect all external peripheral devices from the server.

System Covers

The top cover and top middle cover are both detachable. You need to remove the top cover before you can remove or replace a server component. The middle cover needs to be removed to service the SAS/SATA backplane board and optical drive.

Top Cover

To remove the top cover:

1. Loosen the captive screw on the rear panel with a T-15 screwdriver.
2. Slide the cover approximately 1.25 cm (0.5 in) toward the rear of the unit and then lift the cover to detach it from the chassis.
3. Lift the top cover away from the chassis.

Figure 10 Removing the Top Cover

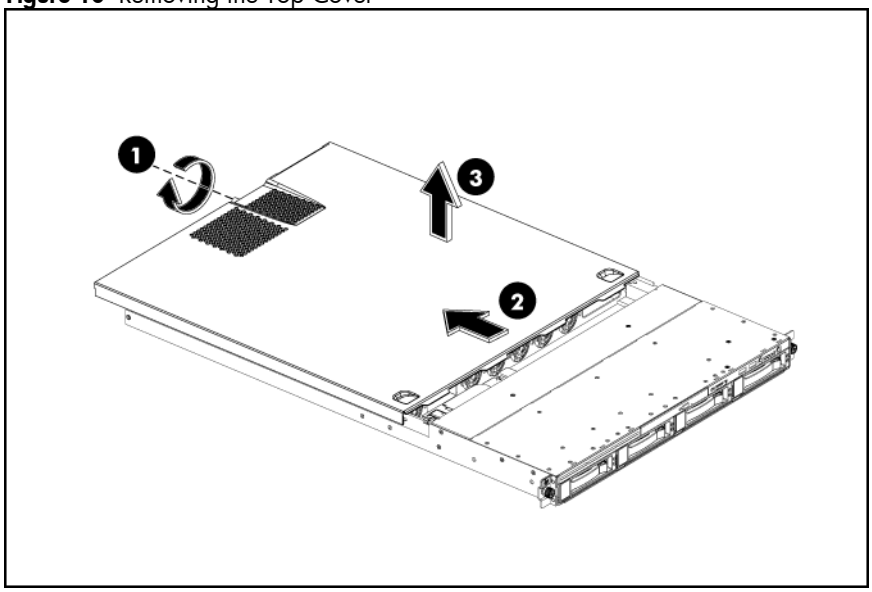

To reinstall the top cover:

1. Align the top cover to the chassis and then slide it toward the front panel to position it into place.
2. Once the cover is attached to the chassis, tighten the captive screw on the rear panel with a T-15 screwdriver.

Figure 11 Reinstalling the Top Cover

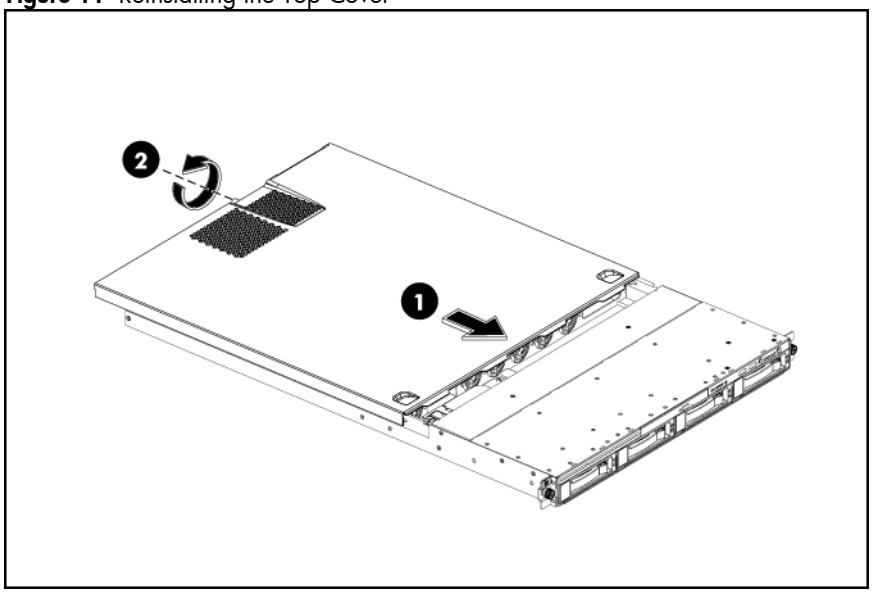

Top Middle Cover

To remove the top middle cover:

1. Loosen the four screws (one on each side of the chassis and two on the top middle cover) that secure the top middle cover to the chassis.
2. Lift the top middle cover away from the chassis.

Figure 12 Removing the Top Middle Cover

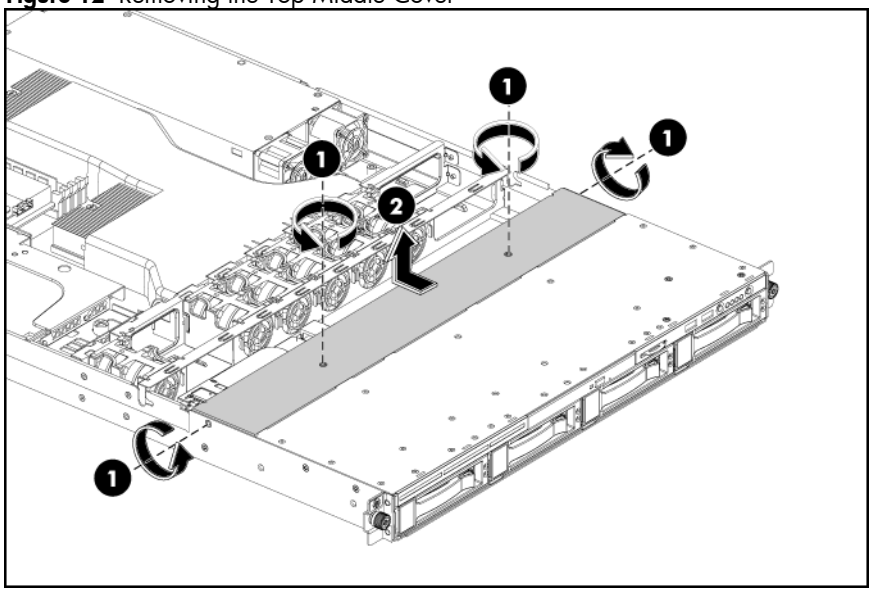

To reinstall the top middle cover:

1. Align the top middle cover to the chassis.
2. Fasten the four screws (one on each side of the chassis and two on the top middle cover) to securing the top middle cover to the chassis.

Figure 13 Reinstalling the Top Middle Cover

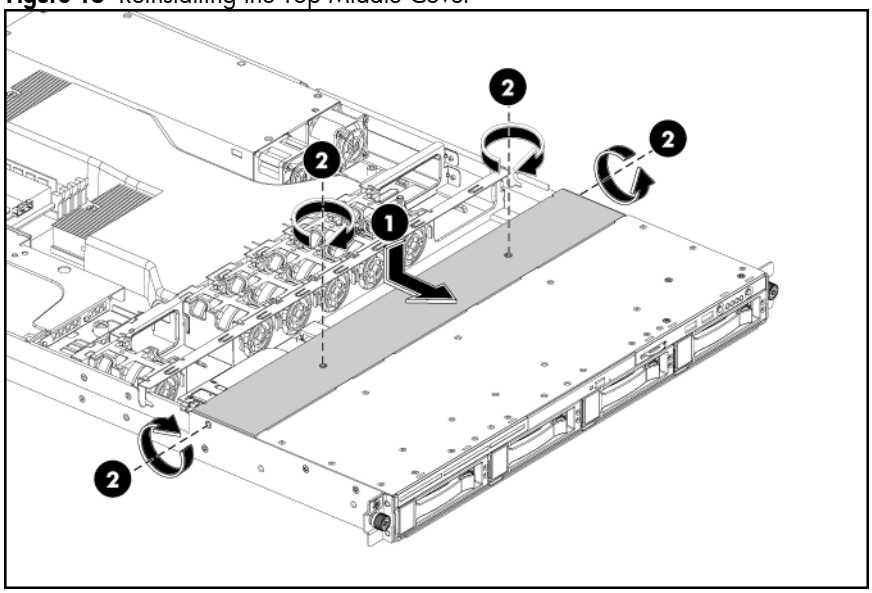

Drives

The server supports up to five drive bays – four drive bays for 3.5-inch hard disks drive and one drive bay for optical disc drive.

Cable Management

Always follow good cable management practices when working inside the computer.

- Keep cables away from major heat sources like the heat sink.
- Do not jam cables on top of expansion cards or memory modules. Printed circuit cards are not designed to withstand excessive pressure.
- Keep cables clear of sliding or moveable parts to prevent cutting or crimping.
- When folding a flat ribbon cable, never fold to a sharp crease. Sharp creases may damage the wires.
- Some flat ribbon cables come pre-folded. Never change the folds on these cables.
- Do not sharply bend any cable. A sharp bend can break the internal wires.
- Never bend a SATA data cable tighter than a 30 mm (1.18 in) radius.
- Never crease a SATA data cable.
- Do not rely on components like the drive cage, power supply, or system cover to push cables down into the chassis.

The next steps illustrate the removal of power cables from connectors P21, P23 and P24:

1. Squeeze on the top of the retaining latch attached to the cable end of the connector.
2. Grasp the cable end of the connector and pull it straight up.

△ **CAUTION:** Always pull the connector – NEVER pull on the cable. Pulling on the cable could damage the cable and result in a failed power supply.

Figure 14 Unplugging power cables

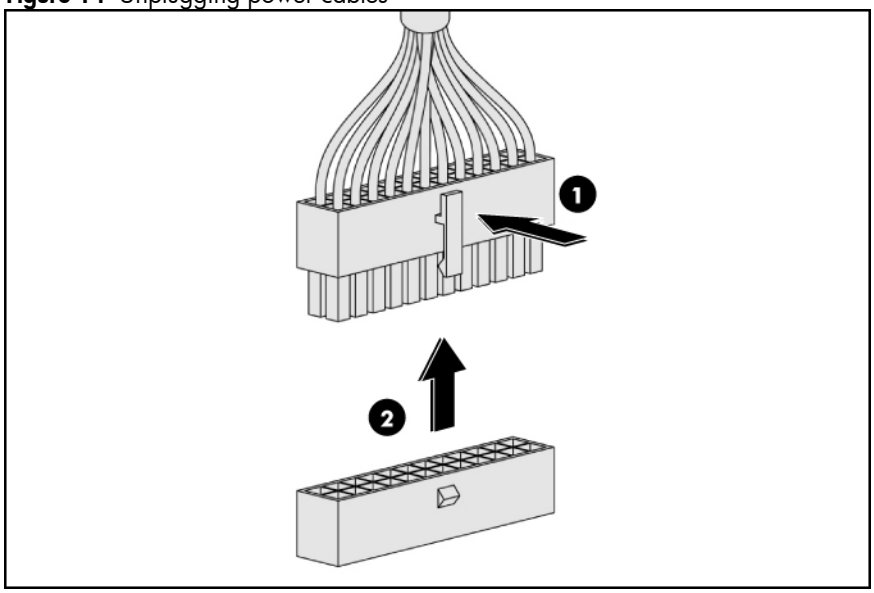

Cable Connections

The following table provides information about switching power supply cable connector labels.

Table 9 Cable connections

Cable	To	Cable Designator
Switching Power Supply	System board 24-pin power connector	P1
Switching Power Supply	System board 8-pin power connector	P2
Switching Power Supply	System board 4-pin power connector	P3
Switching Power Supply	Backplane	P10
Switching Power Supply	Backplane	P11
Switching Power Supply	Optical disc drive	P5
Switching Power Supply	System board Power Supply Management Interface connector	RPS

The following table provides the system board designators that various cables plug into. For more detailed information about system board components, see system board components on page 27.

Table 10 Cable connections

Cable	To	System Board Designator
Internal USB connector	USB	J21
18-Pin front panel connector	Front panel	P10
SATA1 connector	SATA1	SATA1
SATA2 connector	SATA2	SATA2
SATA3 connector	SATA3	SATA3
SATA4 connector	SATA4	SATA4
Front USB 2.0 cable header	USB	P11
5-Pin system fan6 header	System fan6	P19
5-Pin system fan5 header	System fan5	P17
5-Pin system fan4 header	System fan4	P15
5-Pin system fan3 header	System fan3	P13
5-Pin system fan2 header	System fan2	P18
5-Pin system fan1 header	System fan1	P12
4-pin power connector	Power supply	P24
24-pin power connector	Power supply	P21
8-pin power connector	Power supply	P23

Drive Bay Configuration

The server supports a maximum of five drive bays – four bays for 3.5-inch hard disk drives and one drive bay for an optical media drive.

Figure 15 System Drive Bays

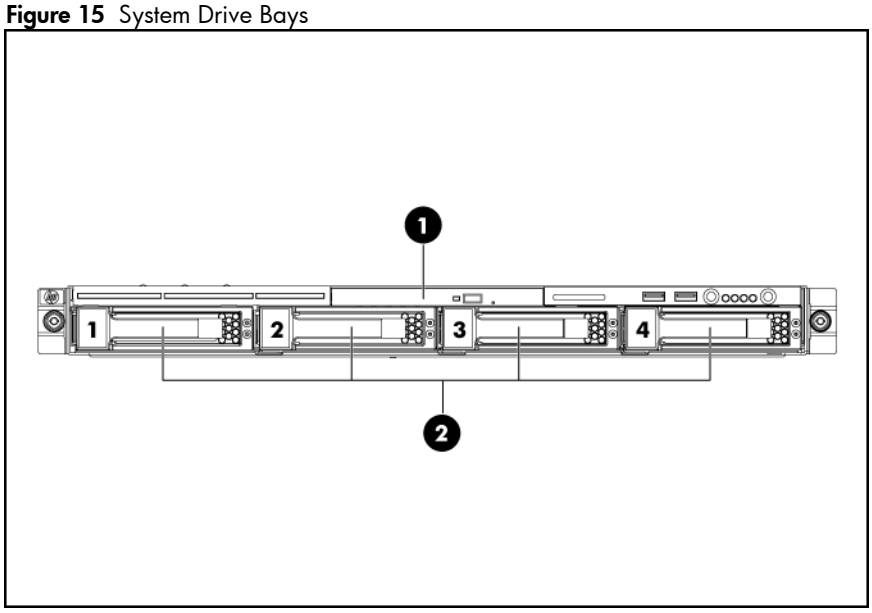

Item	Description
1	Optical Media Device Bay
2	3.5 Inch Hard Disk Drive Bays (four)

The HDD bays support both non-hot-plug and hot-plug SATA drives, as well as hot-plug SAS drives.

Optical Media Device Bay

The optical media device bay supports the installation of a 9.5mm DVD/CD R/RW ROM optical drive.

Installing the DVD/CDRW-ROM (9.5mm) optical drive

Figure 16 DVD/CDRW-ROM Location

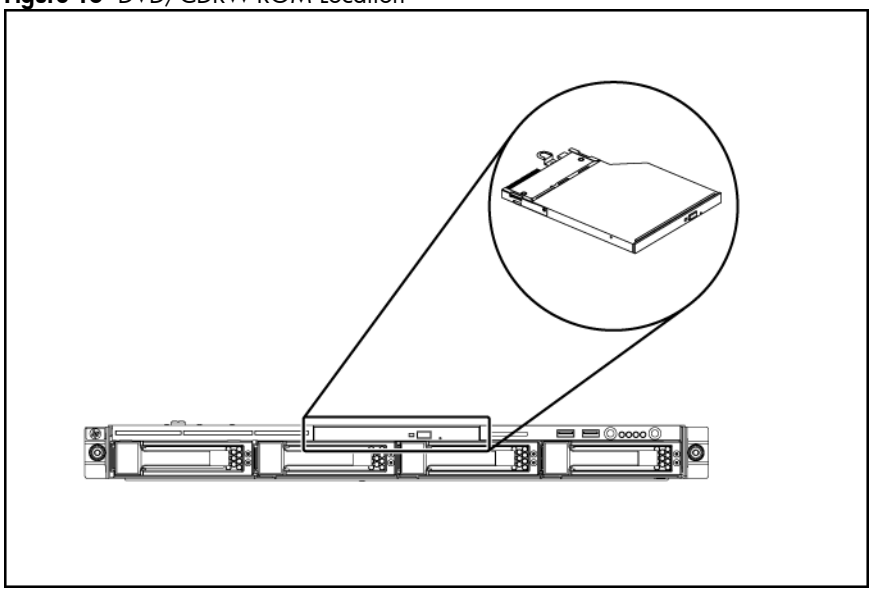

Pre-installation Procedure:

1. Turn off the server and all the peripherals connected to it.
2. Unplug all external cables and AC power cords. If necessary, label each one to expedite reassembly.
3. Remove unit from rack and place on a flat surface.
4. Remove the top cover.
5. Remove the top middle cover.

To remove the bezel blank:

1. Pull the bezel blank out of the carrier.

△ **CAUTION:** Do not discard the bezel blank. If the optical drive is removed in the future, you must reinstall the bezel blank to maintain proper system function.

Figure 17 Removing the Bezel Blank

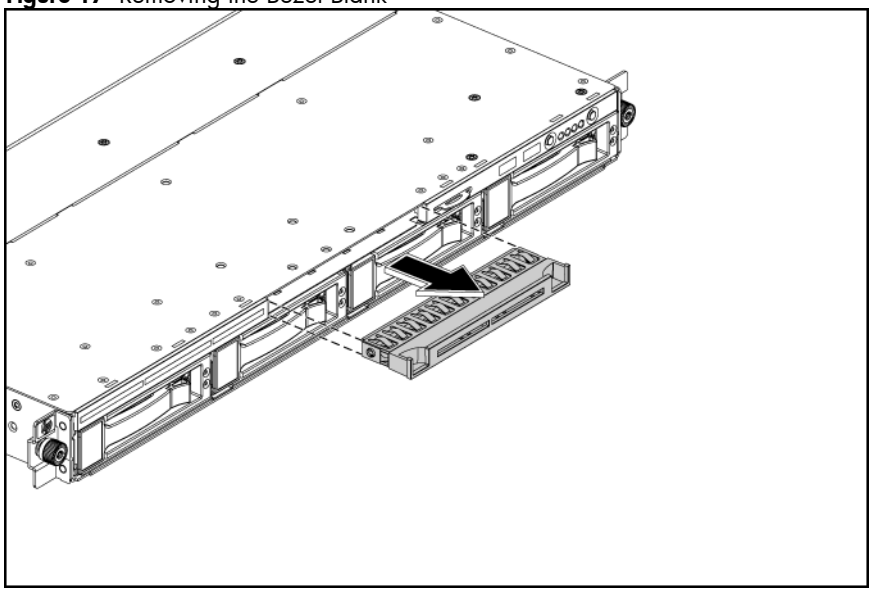

To install the optical drive:

1. Slide the optical drive assembly into the chassis.

Figure 18 Installing the optical drive

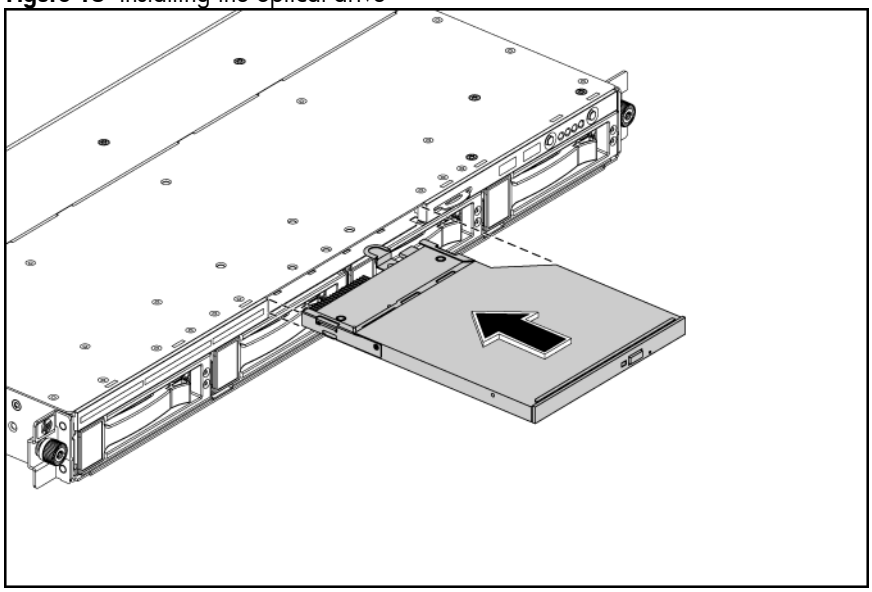

2. Remove the middle cover and connect the IDE data and power cables to their corresponding connectors on the optical drive.

Figure 19 Connecting the cables

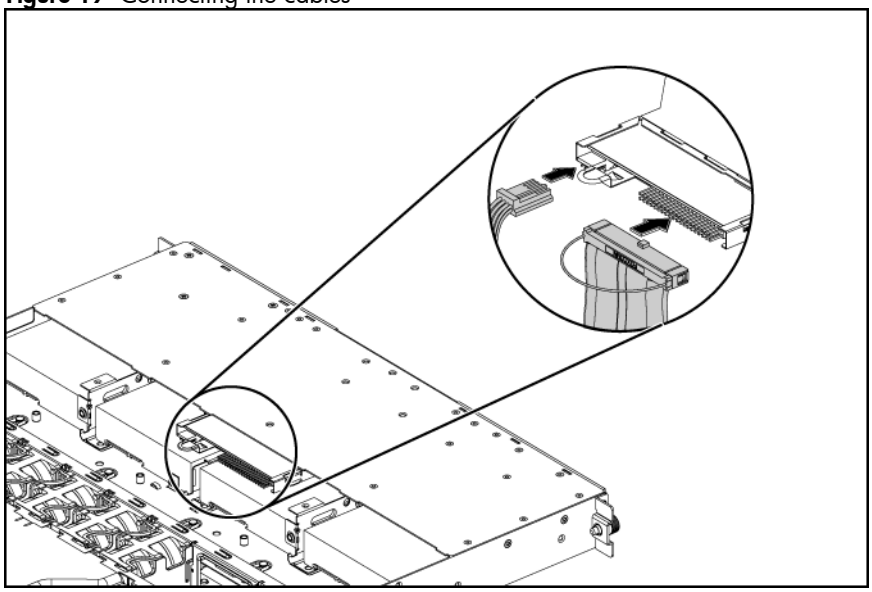

To remove the optical drive:

1. Remove the top middle cover and then unplug the ODD cable and power cable, uplift the spring latch securing the optical drive carrier to the chassis.
2. Push the optical drive toward the front of the unit.
3. Pull the optical drive out of the chassis.

Figure 20 Removing the optical drive

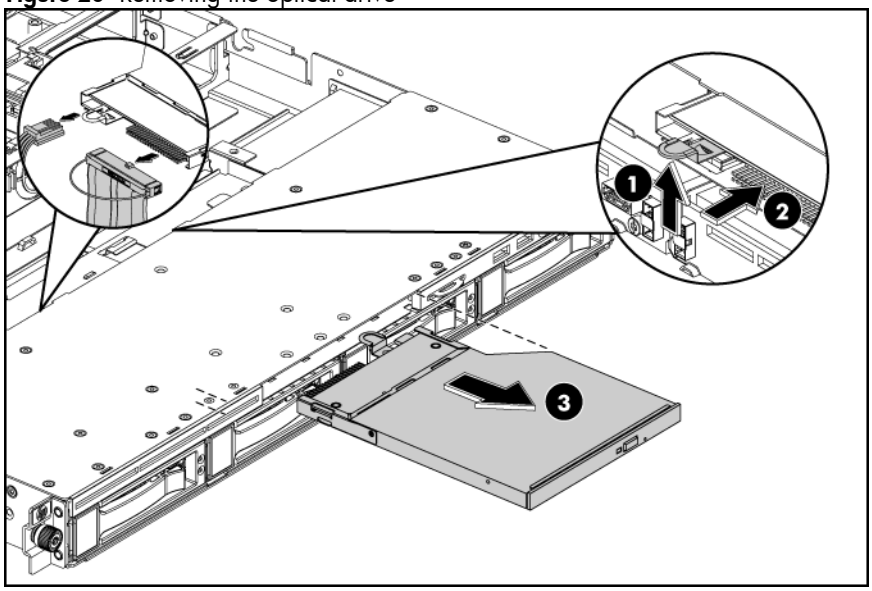

IMPORTANT: If you removed an optical drive without plans of installing a new one, you must reinstall the blank to maintain proper system airflow.

Hard Drives

The drive bays on the front panel can accommodate up to four hard drives. You can install either SAS hard drives or SATA hard drives in the server.

Hard drives installed in the server are labeled from Device 1 to Device 4, from left to right, when viewed from the front of the server.

Figure 21 Hard drive bays configuration

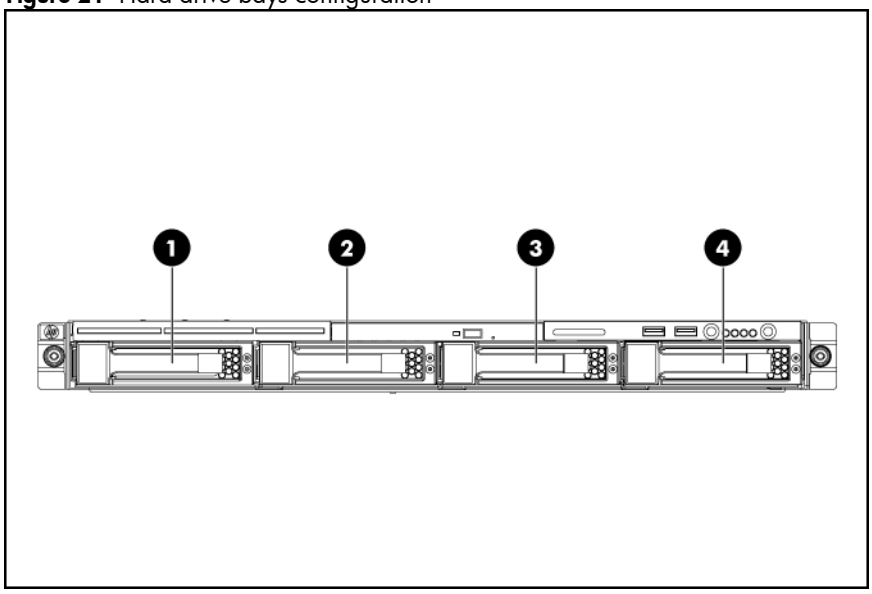

Item	Description
1	1st SAS/SATA Hard Drive
2	2nd SAS/SATA Hard Drive
3	3rd SAS/SATA Hard Drive
4	4th SAS/SATA Hard Drive

To install a hard drive:

1. Pull the hard drive shield out of the chassis.

Figure 22 Removing the hot-plug hard drive blank

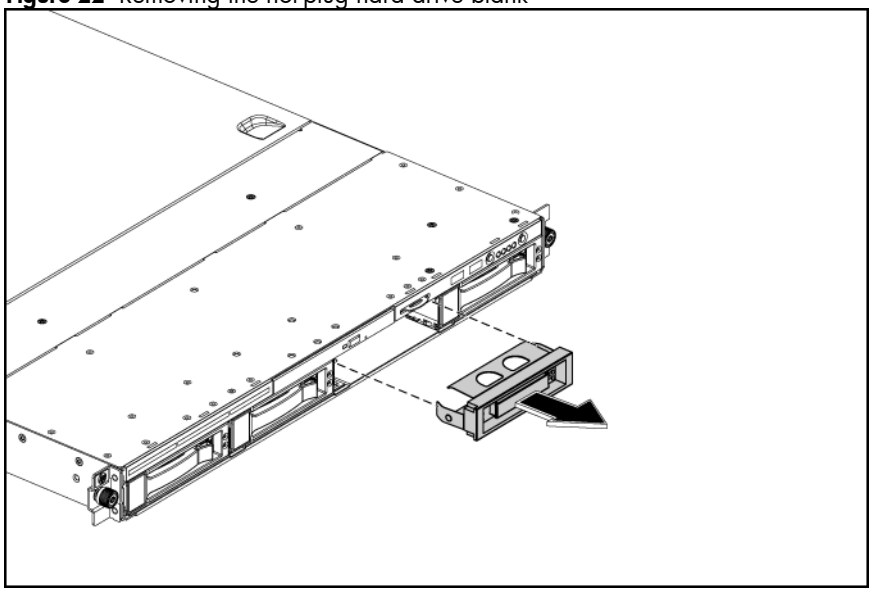

IMPORTANT: Do not discard the hard drive blank. If the drive is removed in the future, you must reinstall the hard drive blank to maintain proper system airflow.

2. Install a hard drive.
   a. Push the hard drive assembly into the drive bay until it stops.
   b. Press the HDD carrier latch inward until it clicks.

Figure 23 Installing the hot-plug hard drive assembly

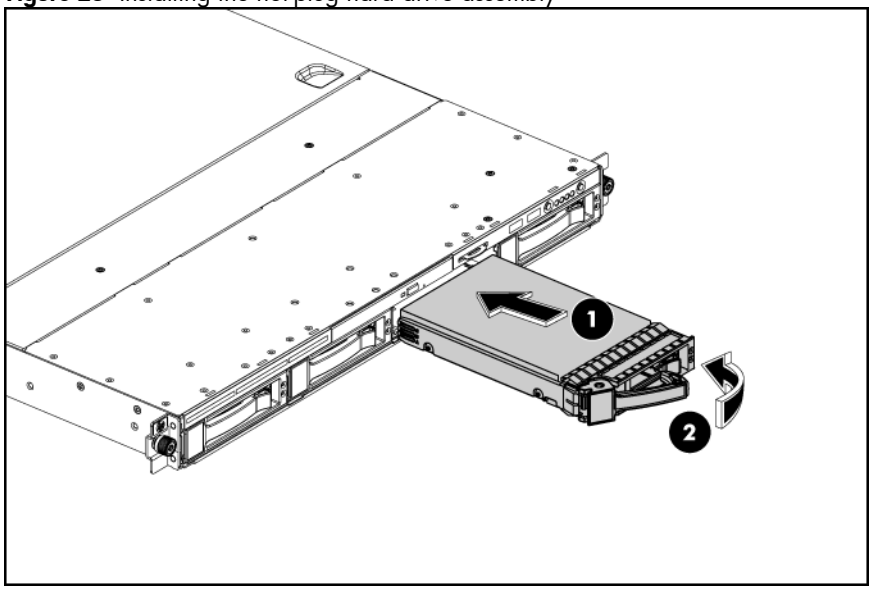

To remove hard drive:

1. Press the hard disk carrier button to release the ejector lever.
2. Use the HDD carrier latch to pull the drive out of the cage.
   Make sure to support the drive when pulling it out of the cage.
3. Pull the hard drive assembly out of the drive bay.

Figure 24 Removing the hot-plug hard drive

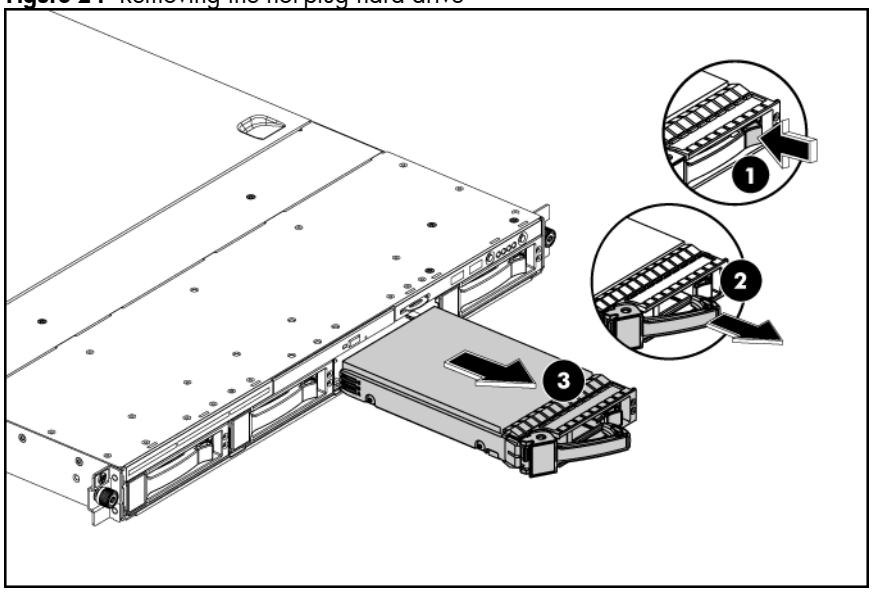

To install a non-hot-plug hard drive:

1. Loosen four screws from the top part of the carrier.
2. Put the non-hot-plug hard drive disk into the carrier.
3. Fasten the HDD to the carrier using the screws (two on each side).

Figure 25 Installing the non-hot-plug hard drive disk into the carrier

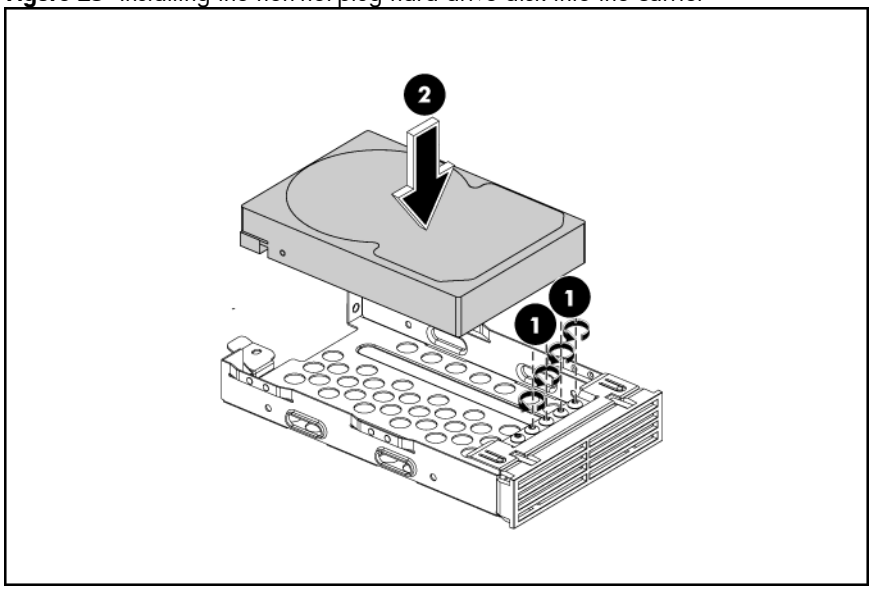

Figure 26 Fastening the non-hot-plug hard drive disk to the carrier

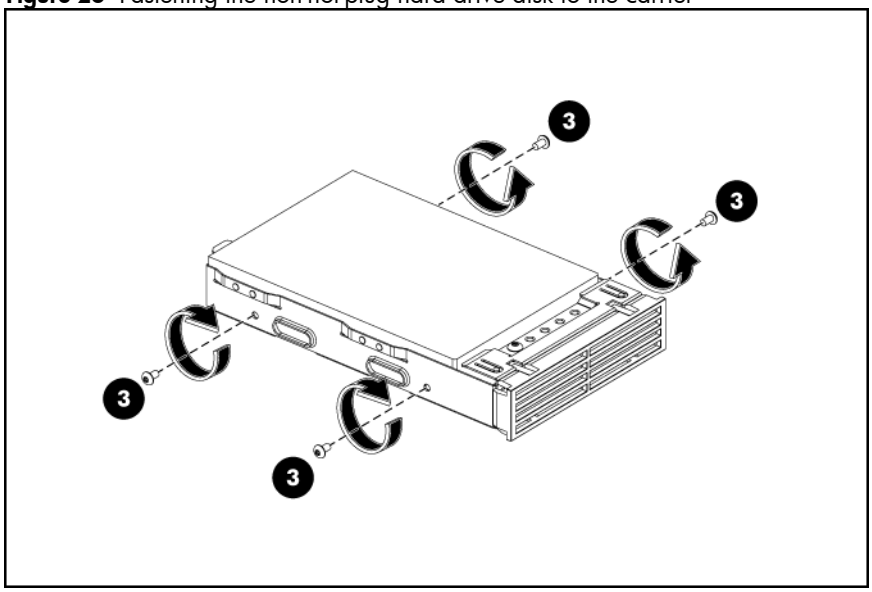

To install a non-hot-plug hard drive in the server:

1. Remove the hard drive blank from front of system if installed.
2. Push the hard drive assembly into the drive bay until it stops.
3. Fasten the screw with the T-15 wrench provided to secure the hard drive to the chassis.
4. Connect the cabling from the HDD backplane to the drive using the cables provided.

Figure 27 Installing the non-hot-plug hard drive assembly

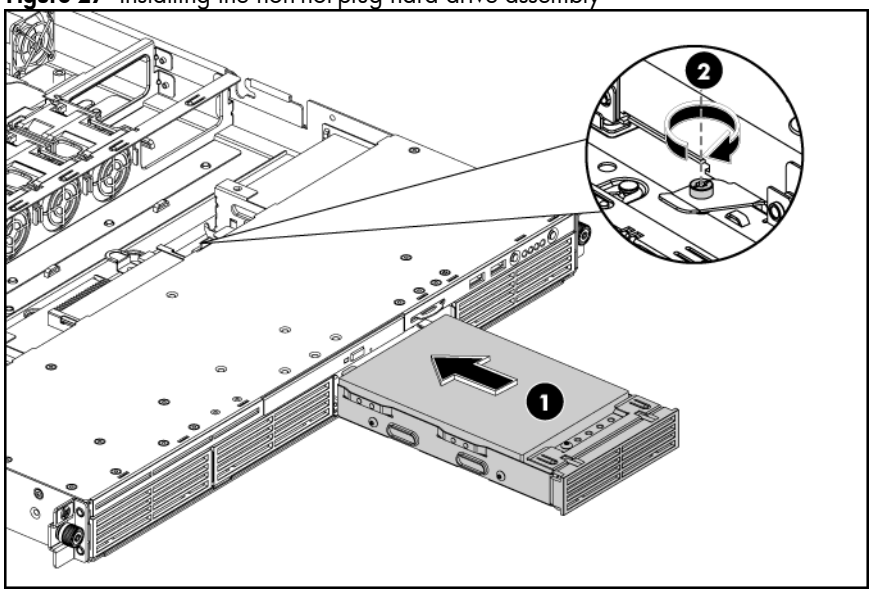

To remove the non-hot-plug hard drive:

1. Loosen the screw with the T-15 wrench provided.
2. Pull the hard drive assembly out of the drive bay.

Figure 28 Removing the non-hot-plug hard drive assembly

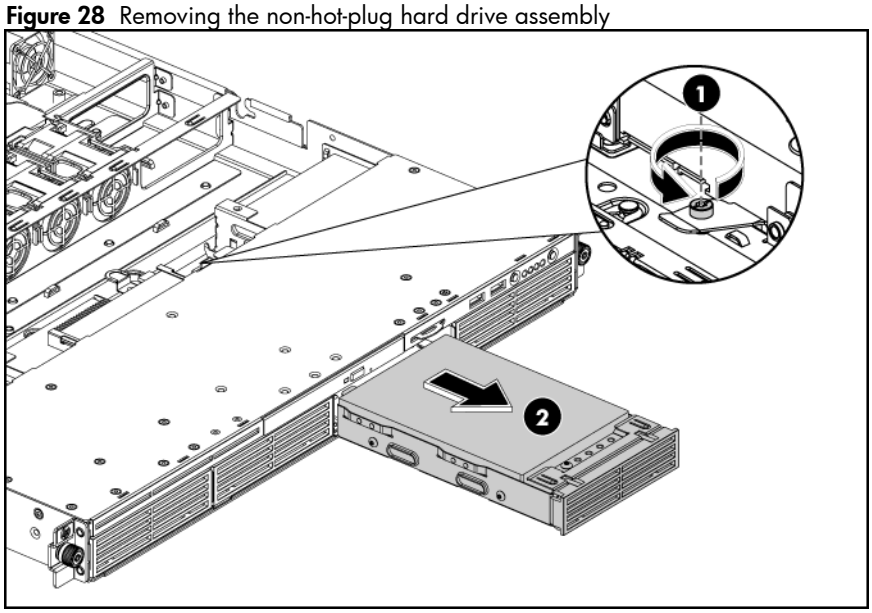

To remove a non-hot-plug hard drive disk from the carrier:

1. Loosen the four screws on the carrier (two on each side).
2. Lift the hard drive from the carrier.

Figure 29 Removing the non-hot-plug hard drive assembly

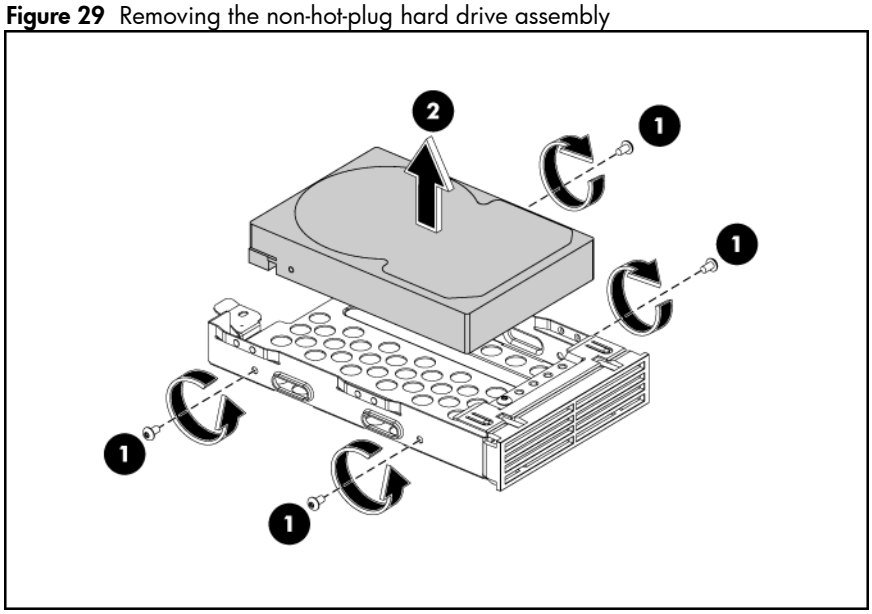

SAS/SATA HDD Backplane

The following figures show the front and back side of the backplane.

Figure 30 Backplane connectors (component side)

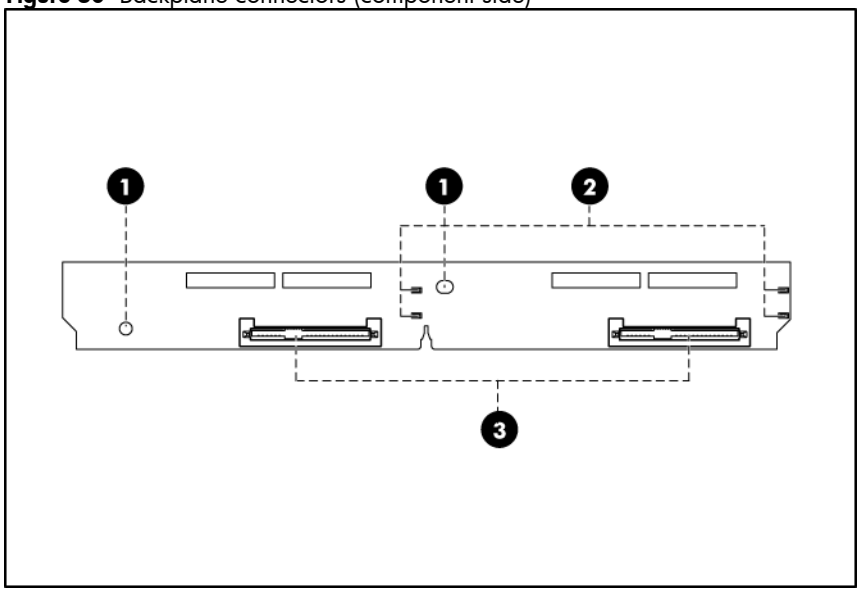

Item	Description
1	Screw Holes
2	LED indicators
3	Headers for Hard Drive

Figure 31 Backplane connectors (solder side)

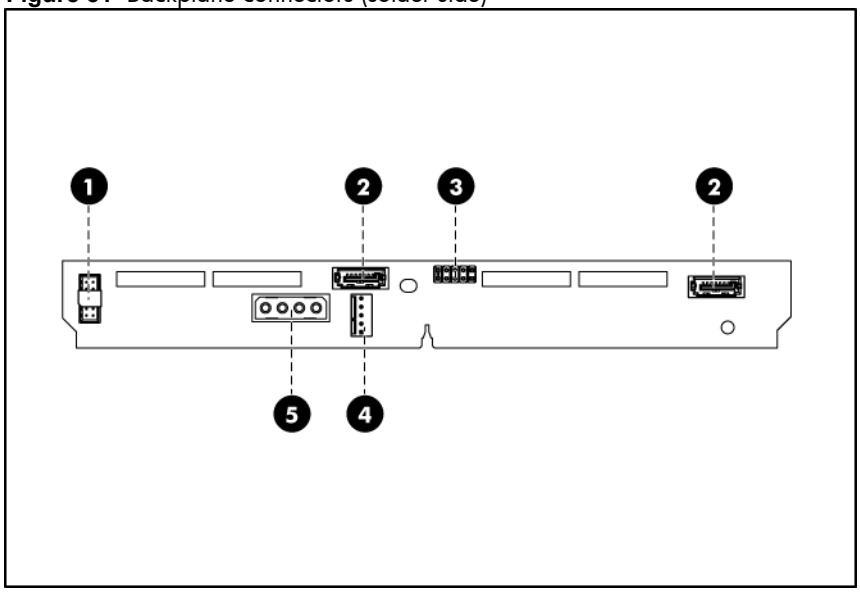

Item	Description
1	Header for backplane aligns to backplane inter-connection
2	SATA Signal Cable Connector
3	SGPIO header

Item	Description
4	PSOC F/W programming header
5	4- pin power connector

⚠ **WARNING:** Ensure that the system is powered off and all power sources have been disconnected from the server. Voltages are present at various locations within the server whenever an AC power source is connected. This voltage is present even when the main power switch is in the off position.

To remove the backplane:

1. Remove all drives out of the drive bays.

   Refer to the Hard Drives sections in this chapter for detailed procedures.

Figure 32 Removing the hot-plug hard drives

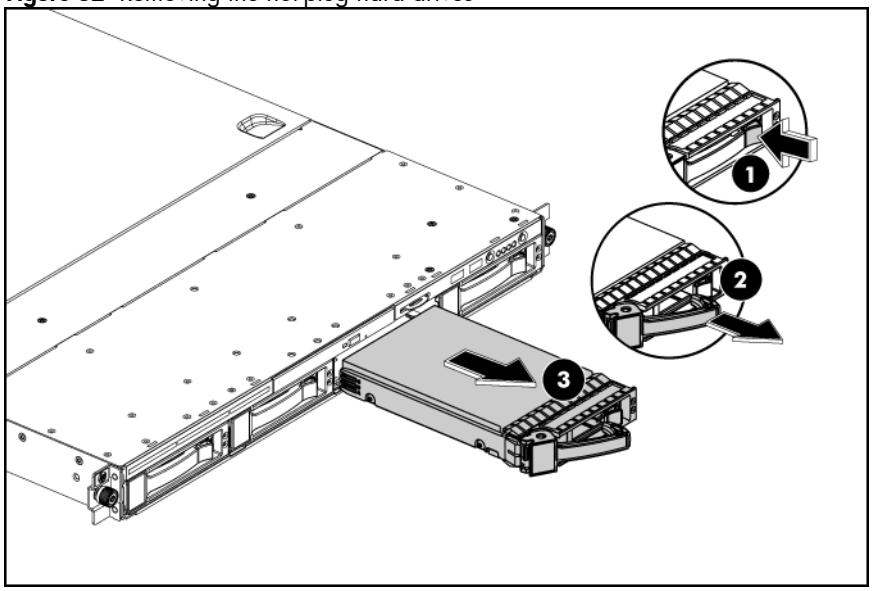

2. Remove the top cover.
3. Remove the top middle cover.
4. Remove the backplane.
   a. Remove all cables including optical drive cables.
   b. Remove the two screws that secure the backplane to the hard drive cage.
   c. Pull the backplane up and out to release it from the hard drive cage.

Figure 33 Removing the backplane

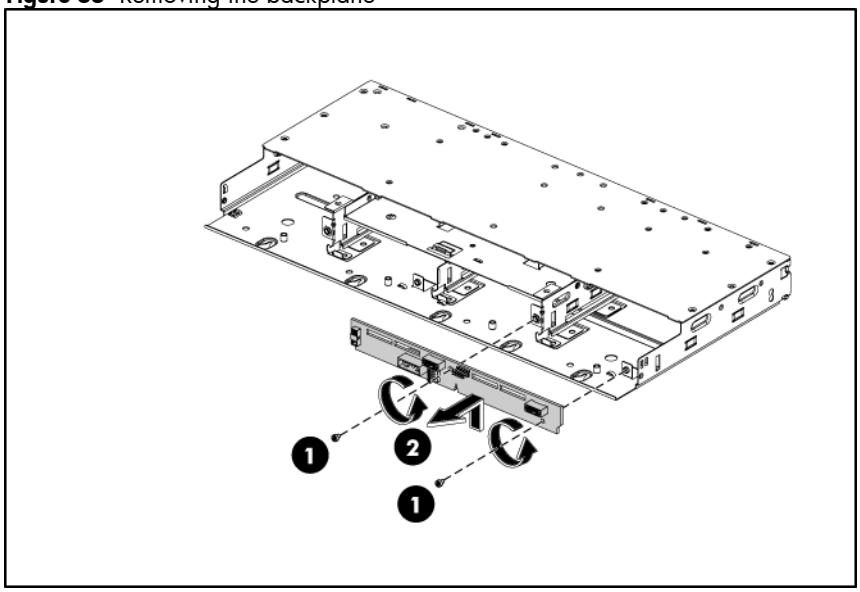

To install the backplane:

1. Orient the backplane so that the notches on the board align with the two hooks on the drive cage and press the board down until it clicks into place.
2. Secure the backplane with two screws.

Figure 34 Installing the backplane

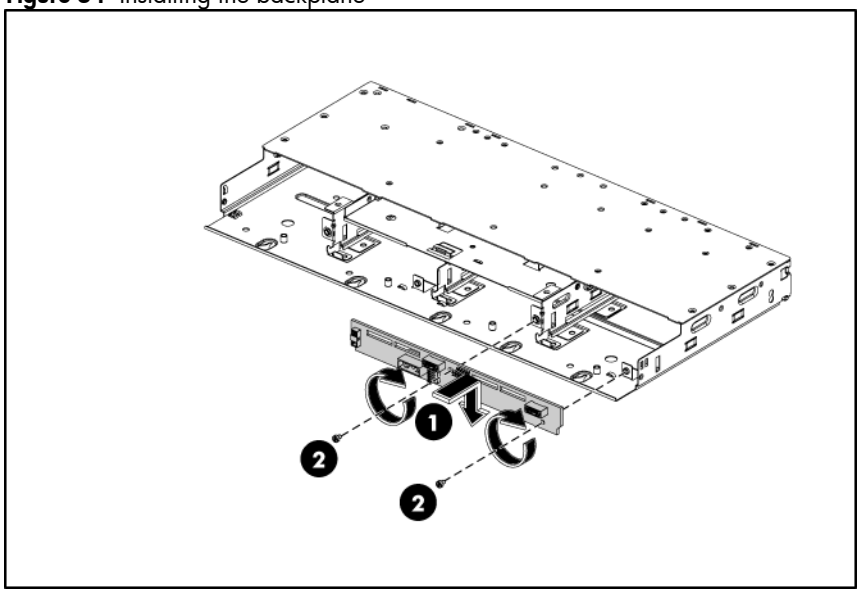

3. Install all cables including optical drive cables.

System Board Configuration

Processor

HP ProLiant DL165 G6 Server supports two AMD six core processors. If a single processor is installed, then use socket 0. When two processors are used, the server supports boot functions through the processor installed in processor socket 0. However, if processor 0 fails, the system can't boot up, and if processor 1 fails, the system will automatically boots from processor 0 and provides a processor failure message.

The processor socket supports 2P AMD Opteron 2000 series processor.

△ **CAUTION:** It is recommended to use processors of same speeds or cache sizes to prevent possible server malfunction.

Figure 35 Processor location

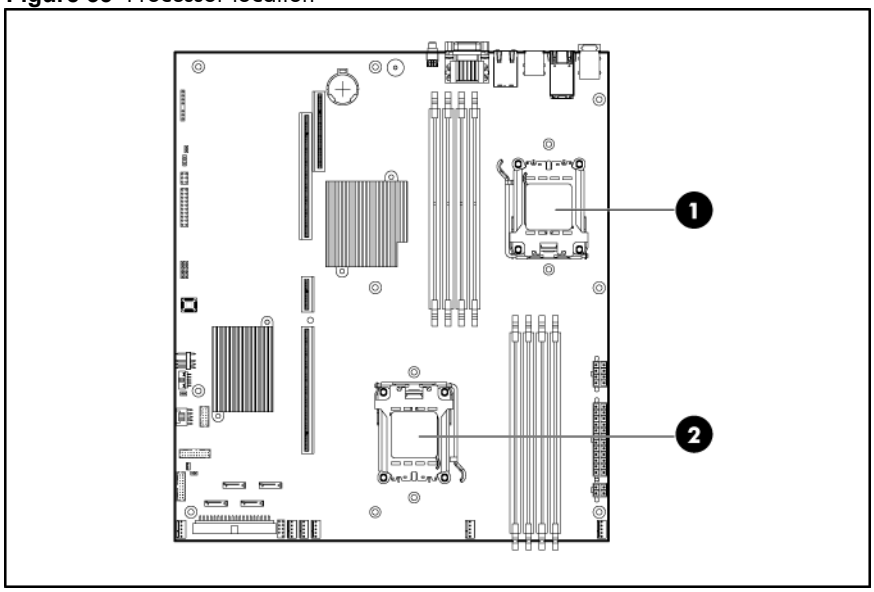

Item	Description
1	Processor 0
2	Processor 1

⚠ **WARNING:** To reduce the risk of personal injury from hot surfaces, allow the heat sink and the processor to cool before touching them.

NOTE: Before installing the processor, remove the air baffle.

To remove the air baffle:

1. Gently rock the air-baffle up.
2. Take the air baffle out from the chassis.

Figure 36 Removing the air baffle

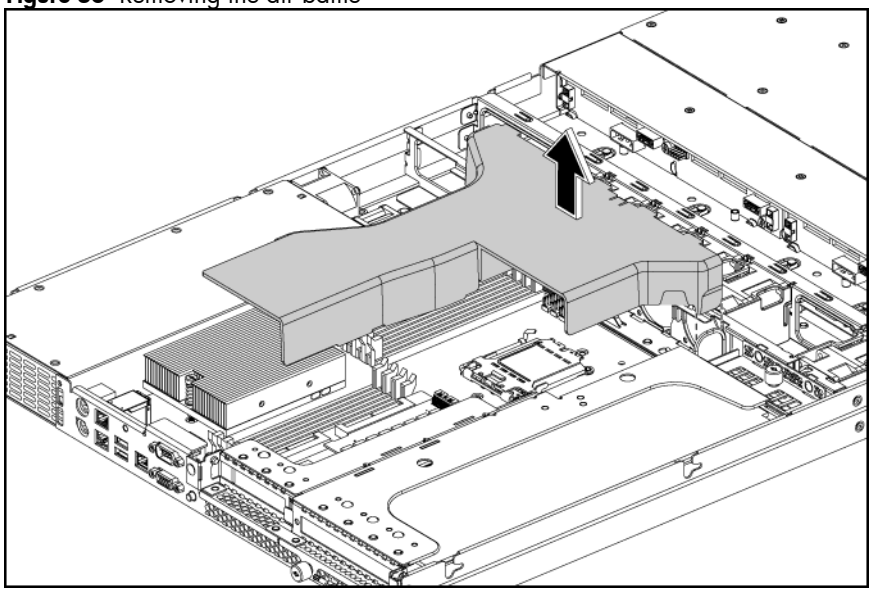

To remove the heat sink:

1. Loosen the two mounting pins.
2. Lift the heat sink away from the system board.

CAUTION: Place heat sink down in an upright position with the thermal patch facing upward. Do not let the thermal patch touch the work surface.

Figure 37 Removing the heat sink assembly

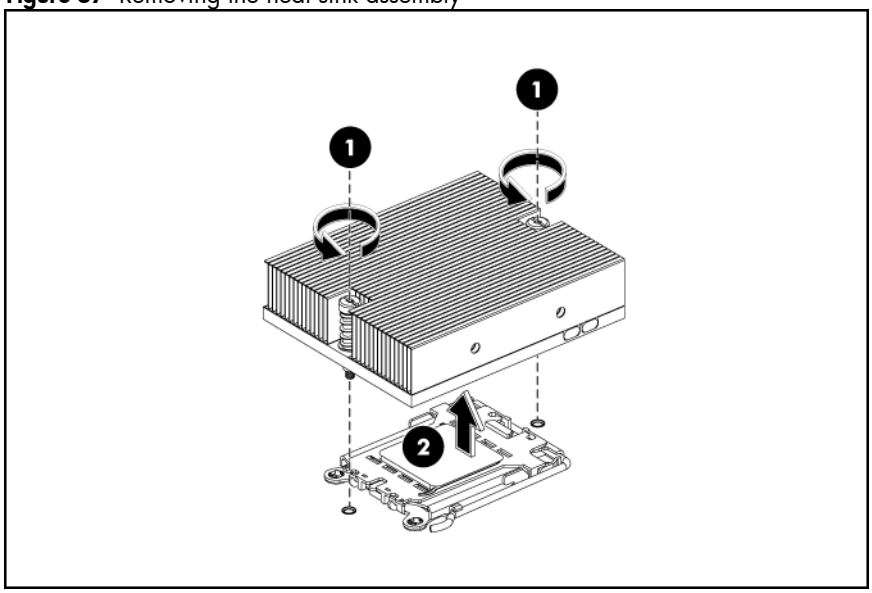

IMPORTANT: If the heat sink has been removed for any reason on a previously installed processor, it is critical that you apply more thermal interface material to the integrated heat spreader on the processor to ensure proper thermal bonding between the processor and the heat sink.

To remove a processor:

1. Disengage the load lever.
2. Lift the retention plate to expose the socket body.
3. Grasp the processor by its edges and lift it out of its socket.

Figure 38 Removing the processor

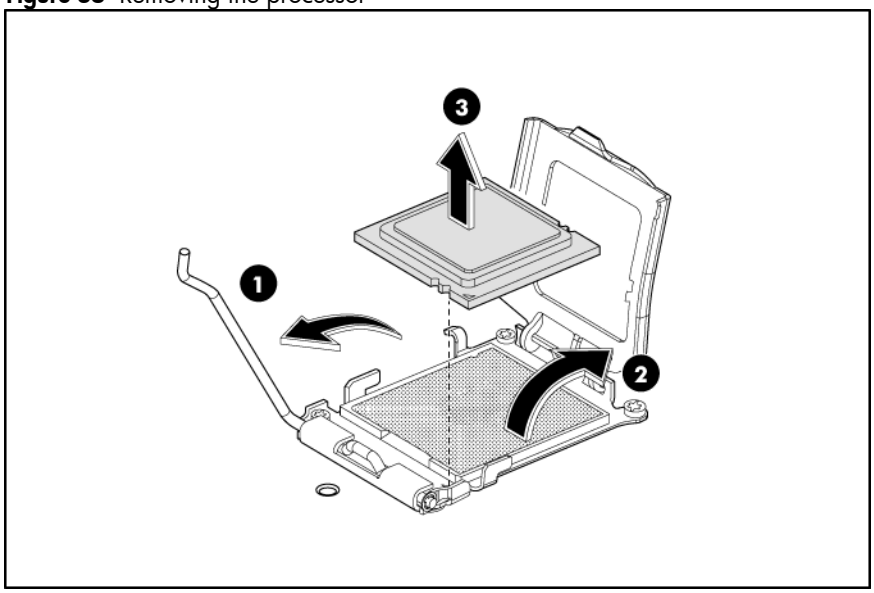

△ **CAUTION:** The pins of the socket are very fragile. Do not bend or damage them.

△ **CAUTION:** Place the processor on a static-dissipating work surface or in an anti-static bag.

△ **CAUTION:** To allow heat sink to draw as much heat as possible from the processor base, there must be good contact between the heat sink base and the top of the processor. To ensure good contact, you must apply thermal interface material.

To apply the thermal grease compound:

1. Use a clean cloth dipped in rubbing alcohol to clean the contact surface on the heat sink and on the new processor. Wipe the contact surfaces several times to make sure that no particles or dust contaminants are evident.
2. Apply the thermal grease compound to the CPU contact surface, to brush a thin coat to cram the gap.

△ **CAUTION:** HP recommends using Shin-Etsu X-23-7783D thermal grease compound for your ProLiant server.

3. Apply all the grease to the top of the processor in one of the following patterns to insure even distribution.

Figure 39 The top of processor

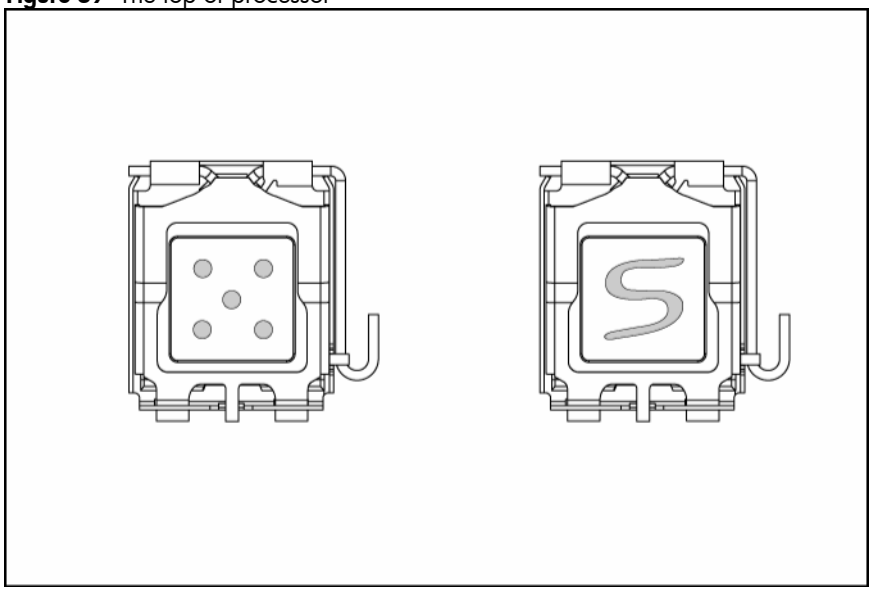

CAUTION: Never touch the bottom of the processor; any contaminant could prevent the mounting pads from making contact with the socket.

CAUTION: Applying too much grease creates a gap between the contact surfaces, significantly reducing the ability of the heat sink to draw out heat. Installing the heat sink with excessive grease can also cause the grease to spread over the processor pins or the system board base, which can cause electrical shorts that damage the system.

To install the new processor:

1. Insert the processor into the socket, using the key on the processor.

CAUTION: With the load lever and the retention plate disengaged, hold the processor by its edges and align it over the empty processor socket. Make sure that you properly align the processor with the orientation notch on the socket.

2. Engage the retention plate.
3. Engage the load lever.

Figure 40 Installing the processor

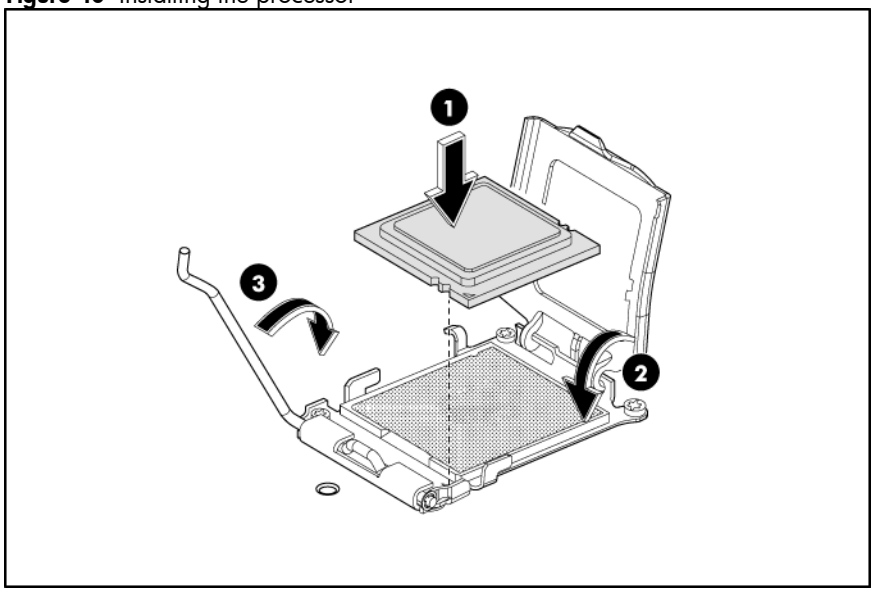

CAUTION: To prevent overheating or a possible system crash, use only a heat sink model specified for the HP ProLiant DL165 G6 server.

To install the heat sink:

1. Properly align the heat sink mounting pins to the system board mounting holes.
2. Tighten the mounting pins clockwise to secure the heat sink connection to the system board.

Figure 41 Installing the heat sink

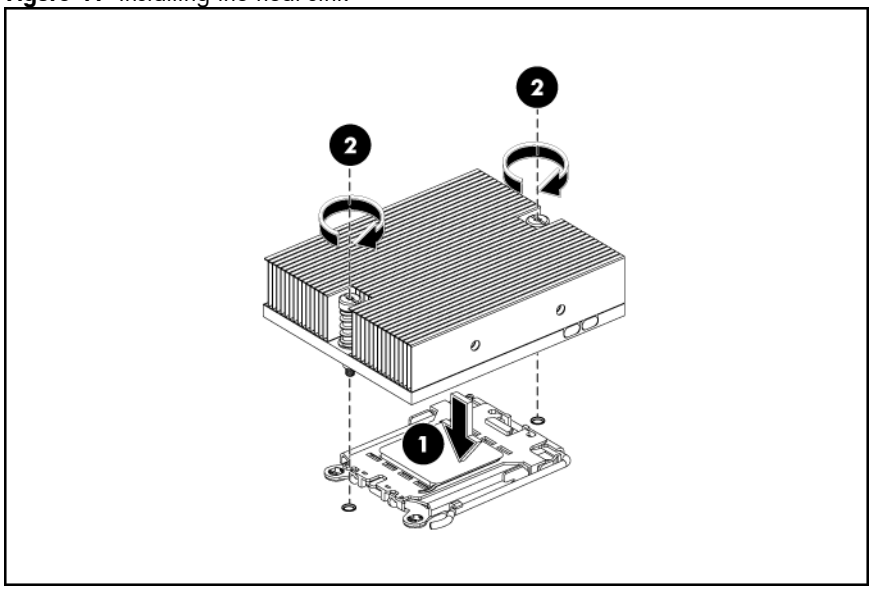

To install the air baffle:

1. Gently place in the air baffle.

Figure 42 Installing the air baffle

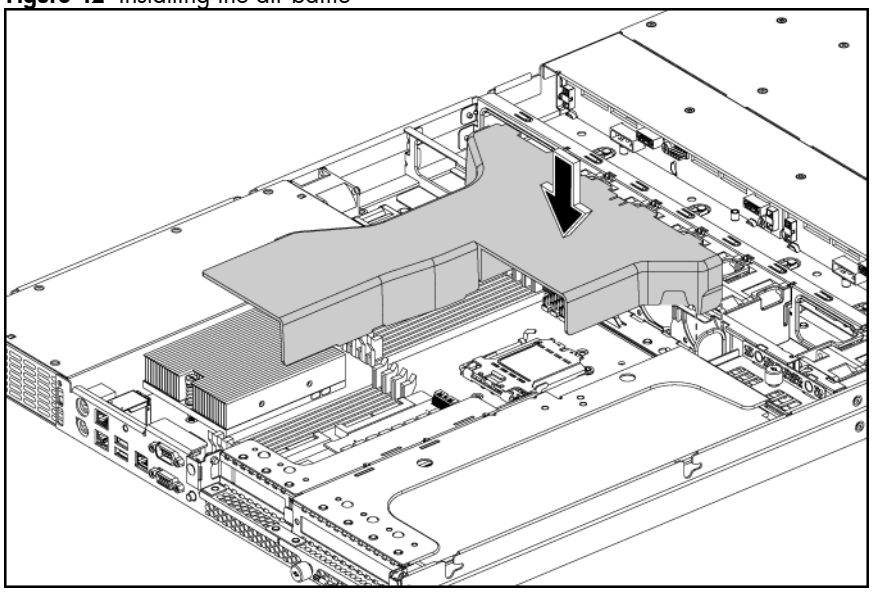

Memory

HP ProLiant DL165 G6 server has eight DIMM slots that support up to 64 GB maximum system memory (8GB in each of the eight DIMM slots).

You must adhere to the following guidelines when adding or replacing memory modules:

- For 2P system, both physical processors must be of the same type and speed.
- Use 800 MHz ECC DDR2 (Registered DIMM).
- Supported DIMM: 1 GB, 2 GB, 4GB, 4GB LP and 8GB (64 GB maximum capacity).

Figure 43 DIMM slots

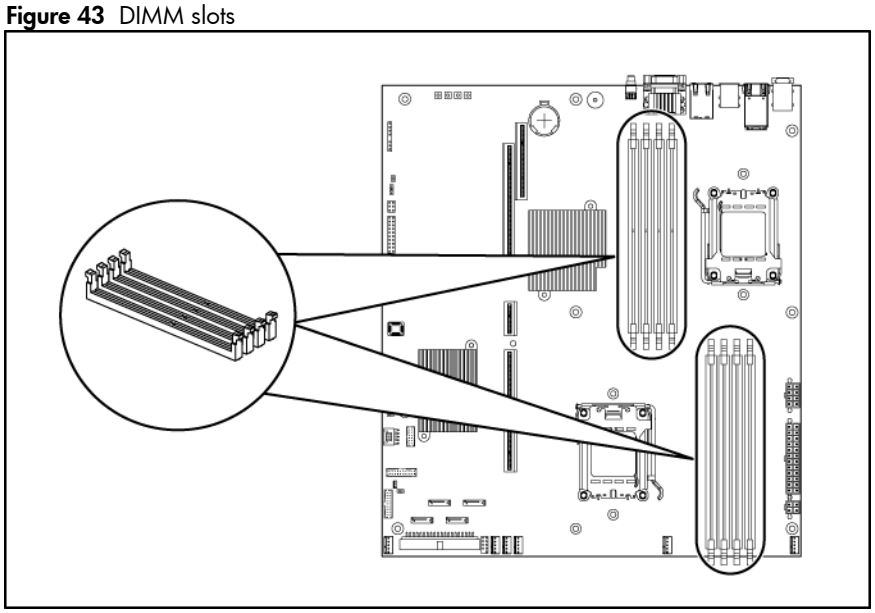

NOTE: Before installing the memory, remove the air baffle first, for detailed procedure, refer to the 'Processor' section in this chapter.

To remove memory module:

1. Completely open the holding clips securing the module.
2. Gently pull the memory module upward to remove it from the slot.

Figure 44 Removing a memory module

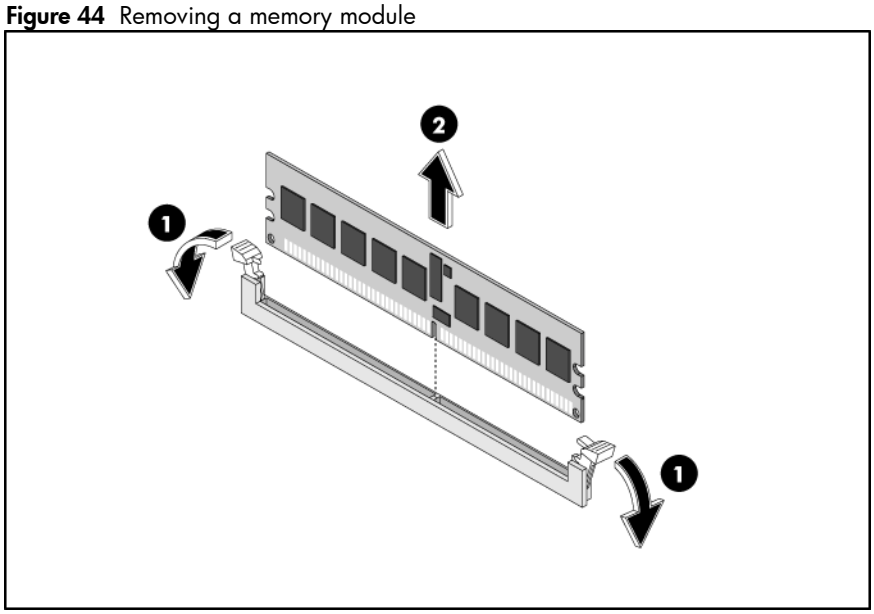

CAUTION: Place the memory module on a static-dissipating work surface or inside of an anti-static bag.

To install a memory module:

1. Align the notch on the bottom edge of the module with the keyed surface of the DIMM slot and then press the module fully into the slot.
2. Firmly press the holding clips inward to secure the memory module in place.

Figure 45 Installing a memory module

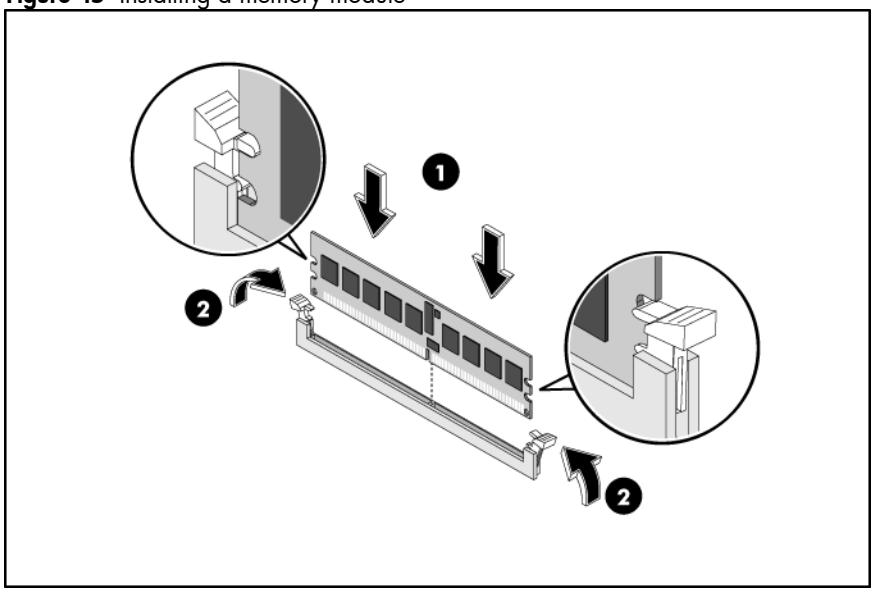

CAUTION: The memory slots are structured to ensure proper installation. If you insert a memory module but it does not fit easily into the slot, you may have inserted it incorrectly. Double-check the orientation of the module and reinsert. If the holding clips do not close, the module is not inserted correctly.

PCI Expansion Cards

System Board PCI Expansion Slots

There are three PCI expansion slots on the system board.

Figure 46 System board PCI expansion slots

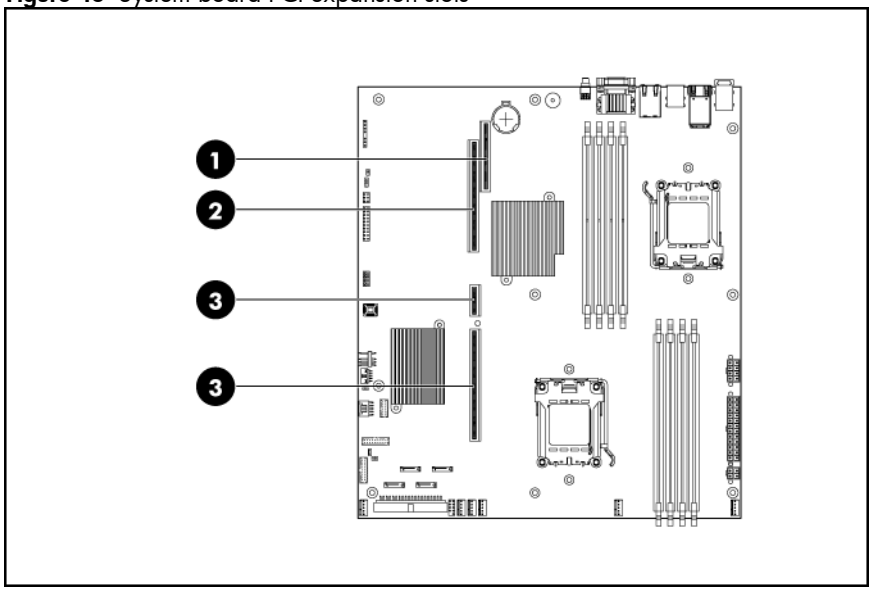

Item	Component Designator	Component	Function
1	J19	Half Height PCI slot	Supports a PCIe or PCI-X Riser Card
2	J33	Full Height\Full Length PCI slot	Supports a PCIe Riser Card
3	J24,J23	Full Height\Full Length HTX slot	Supports a HTX Riser Card

PCI Riser card Expansion Slots

The two PCI Express riser cards attached to the PCI cage convert the functionality of the system board expansion slots to the slots positioned at a 90° angle from the system board.

NOTE: Users have the option to replace the single Slot PCI Express riser card in Slot 1 with a PCI-X model using the PCI-X riser card option kit. This will allow support for PCI-X devices.

Figure 47 PCIe riser card slot location

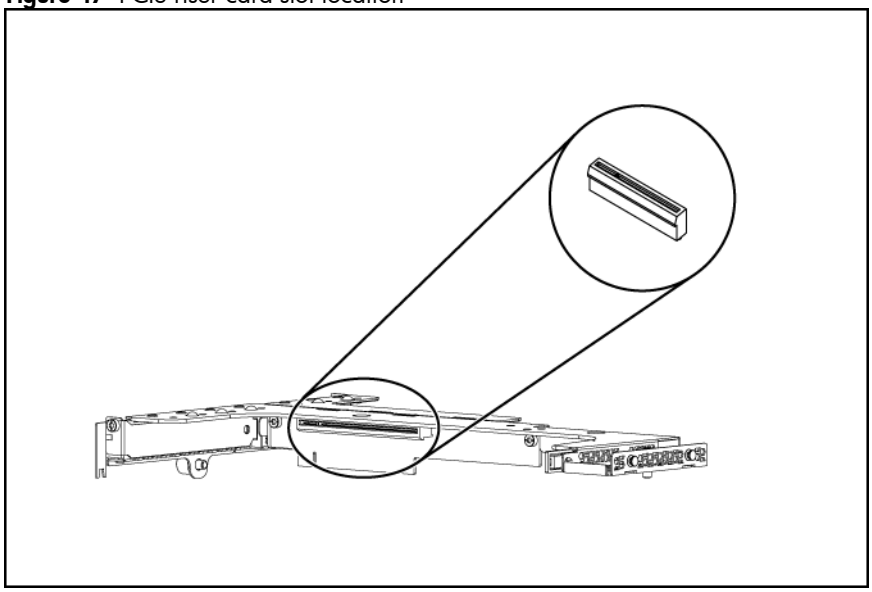

- Single-Slot PCIe Riser card (x16 link with x16 slot)

Figure 48 PCIe riser card slot location

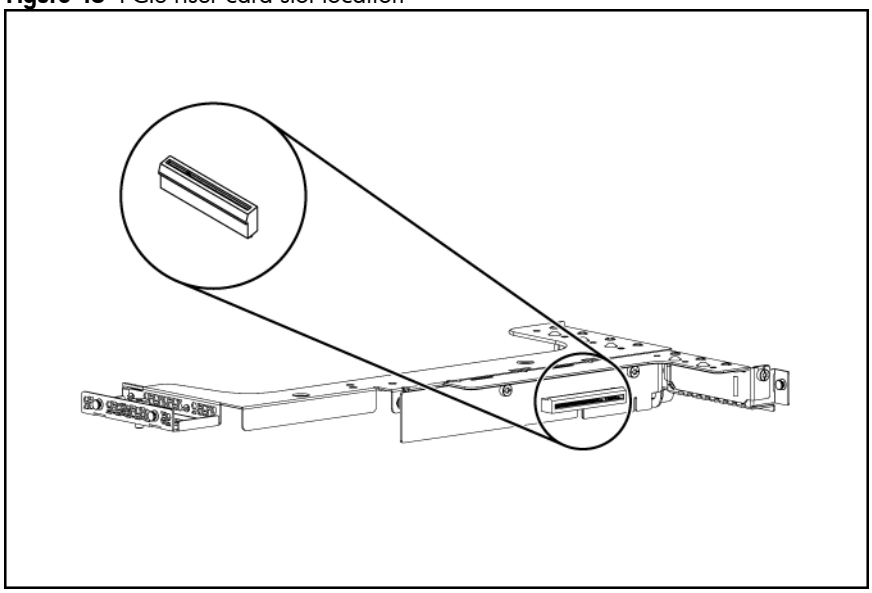

- Single-Slot PCIe Riser card (x4 link with x8 slot)

PCI cage

To remove the PCI cage:

NOTE: Disconnect all cables connecting an existing expansion board to the system board.

1. Loosen the two captive screws that secure the PCI cage to the chassis.
2. Lift the PCI cage away from the chassis.

Figure 49 Removing the PCI cage

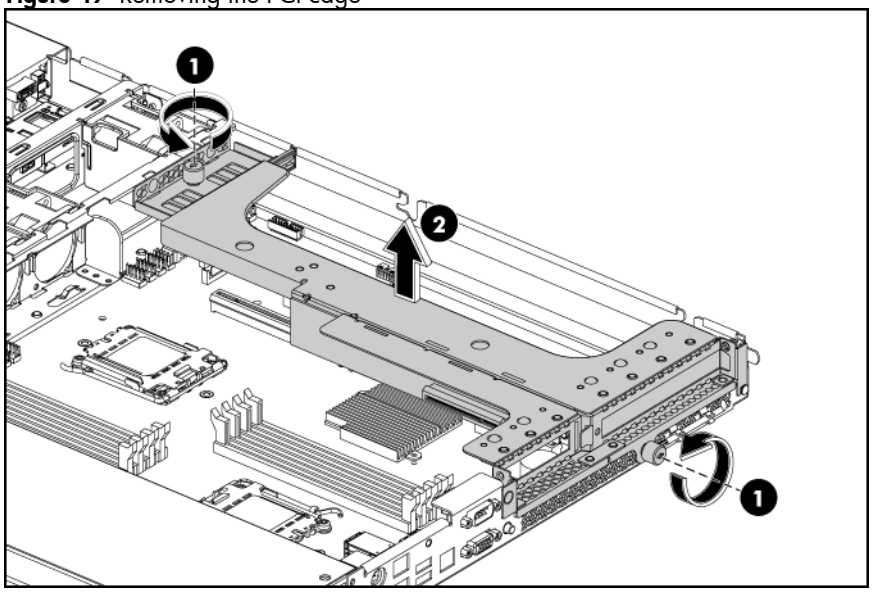

Installing PCIe/PCI Riser Board

The system supports up to two riser boards at a time. Use only HP supported expansion boards that meet the following specifications:

- Compliance
  - PCI Express x4 or x8
  - PCI-X (available only when the optional PCI-X riser board is installed)
  - HTX (available only when the FL/FH PCIe riser card is not installed)
- Form Factor
  - Low-profile
  - Full-Height/Full-Length

To remove the HTX riser card:

1. Loosen the two screws securing the riser card to the PCI cage.
2. Pull the riser card away from the PCI cage.

Figure 50 Removing the HTX riser card

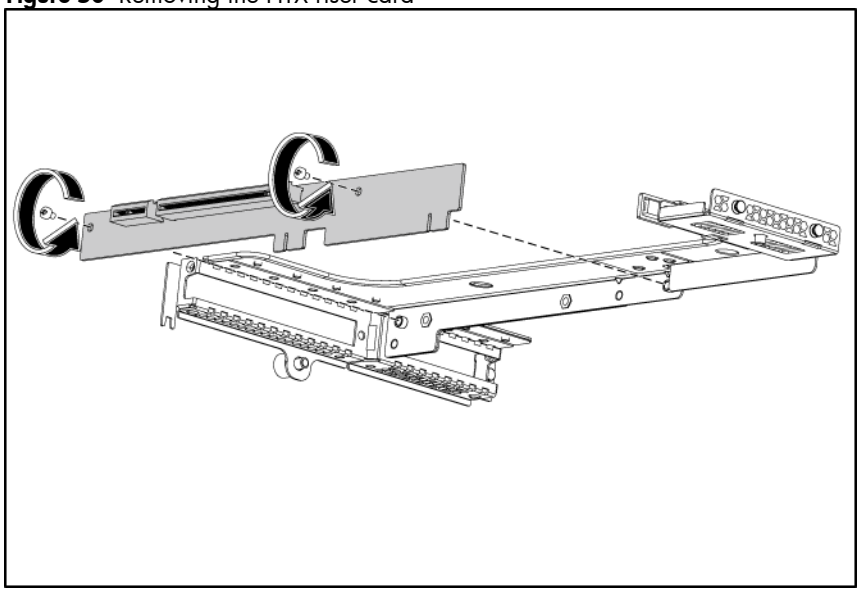

To remove the PCIe riser card:

1. Loosen the two screws securing the riser card to the PCI cage.
2. Push the riser card down and away from the PCI cage.

Figure 51 Removing the PCIe riser card (1)

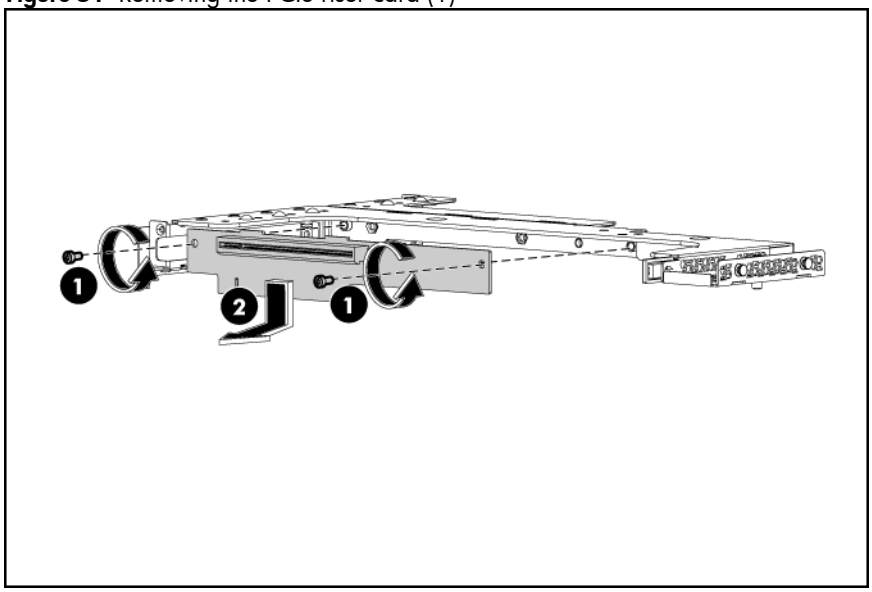

Figure 52 Removing the PCIe riser card (2)

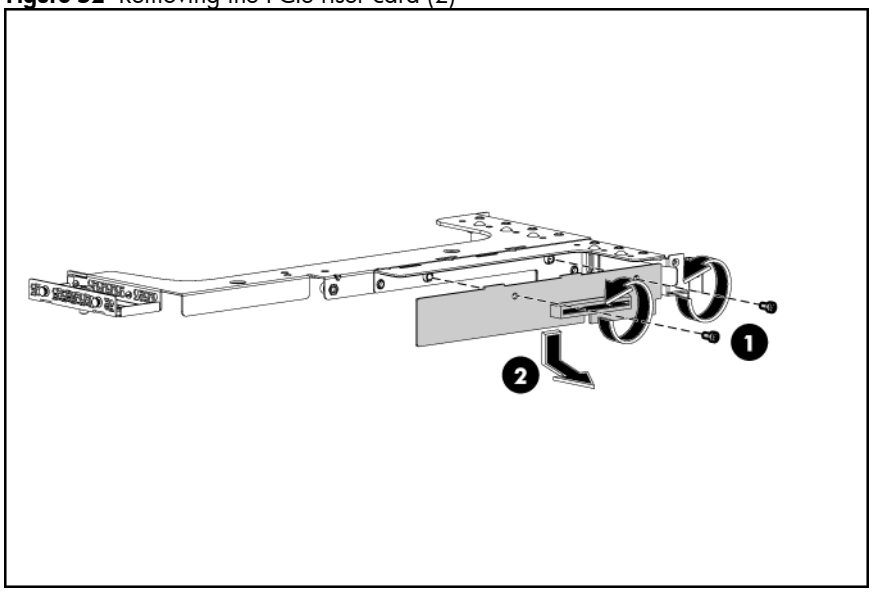

To install the HTX riser card:

1. Align the two riser card slots to the standoff on the PCI cage, and then push the card up.
2. Install and tighten the two screws that secure the riser card to the PCI cage.

Figure 53 Installing the HTX riser card

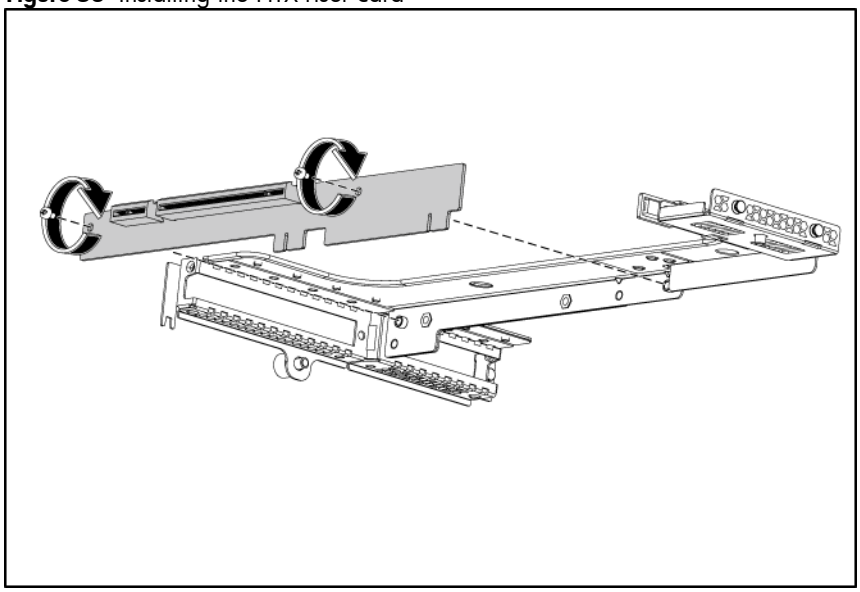

To install the PCIe riser card:

1. Align the two riser card slots to the standoff on the PCI cage, and then push the card up.
2. Install and tighten the two screws that secure the riser card to the PCI cage.

Figure 54 Installing the PCIe riser card (1)

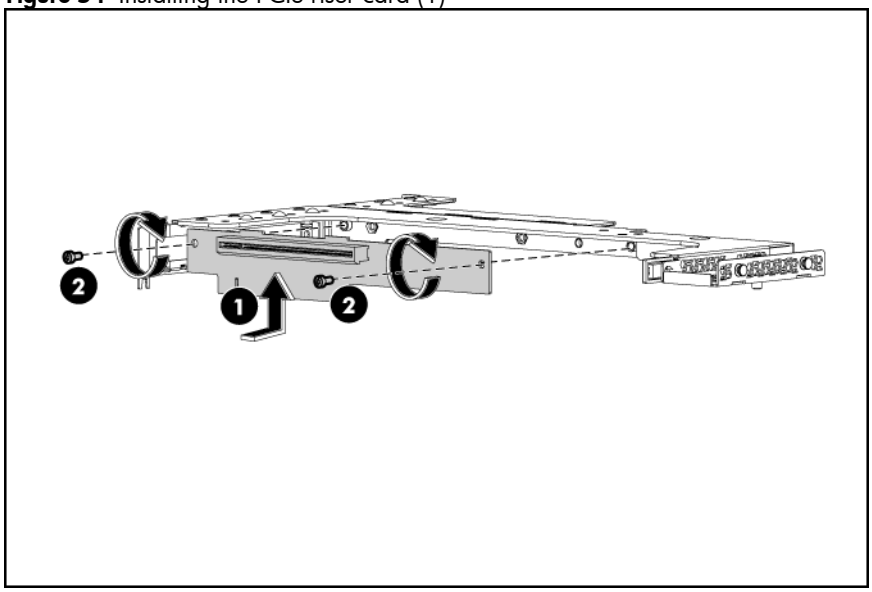

Figure 55 Installing the PCIe riser card (2)

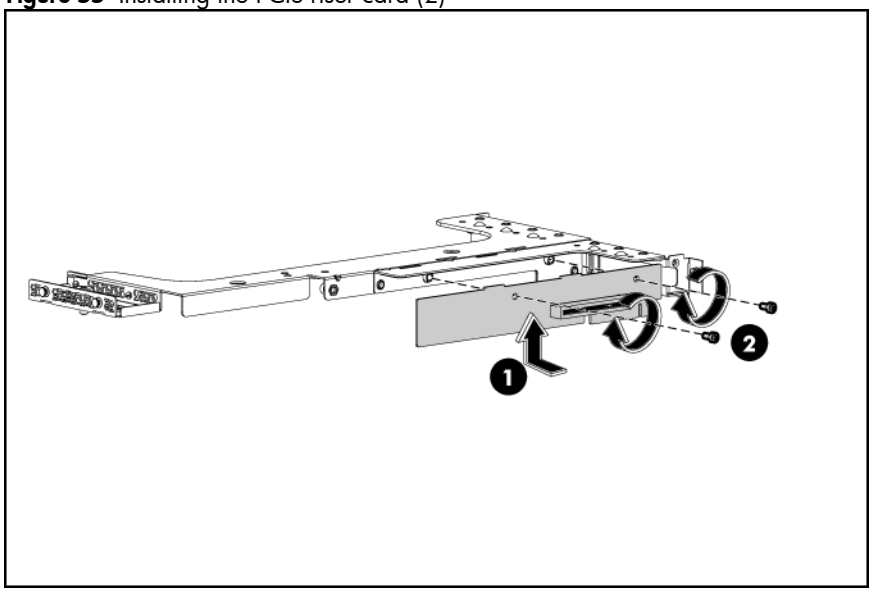

To remove the slot cover:

1. Loosen the screw(s) that secure(s) the slot cover(s) to the chassis.
2. Remove the slot cover(s) on the PCI cage.

△ **CAUTION:** Do not discard the slot cover. If the expansion board is removed in the future, the slot cover must be reinstalled to maintain proper cooling.

Figure 56 Removing the slot cover (1)

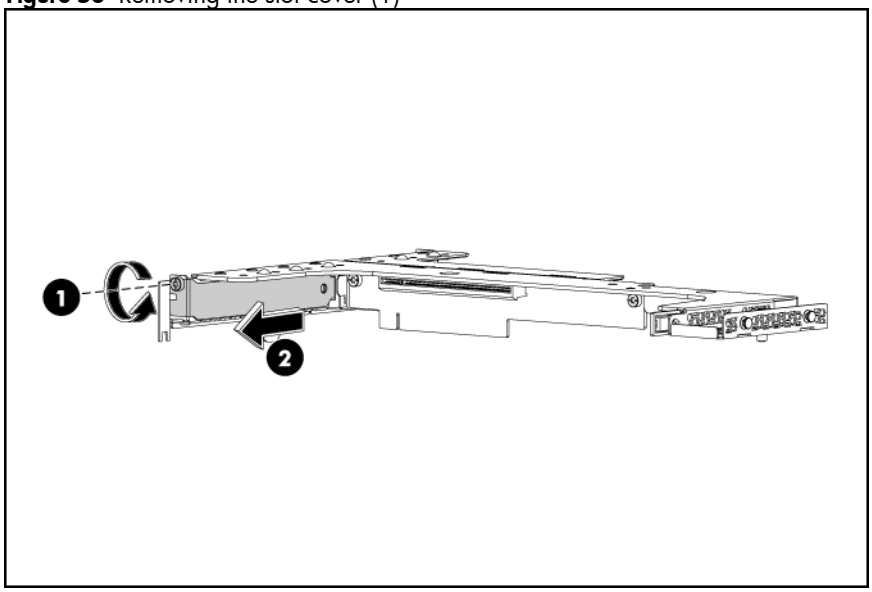

Figure 57 Removing the slot cover (2)

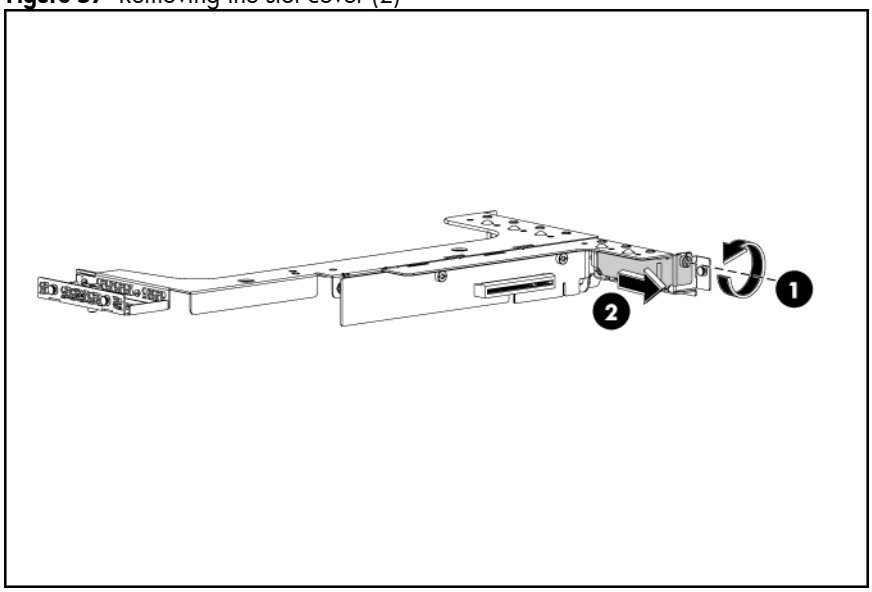

To install the PCI card:

1. Slide the expansion board into the slot, aligning the board with its matching connector. Firmly press the board to seat it properly on the slot.
2. Tighten the screw that secures the card to the PCI cage.

Figure 58 Installing the PCI card (1)

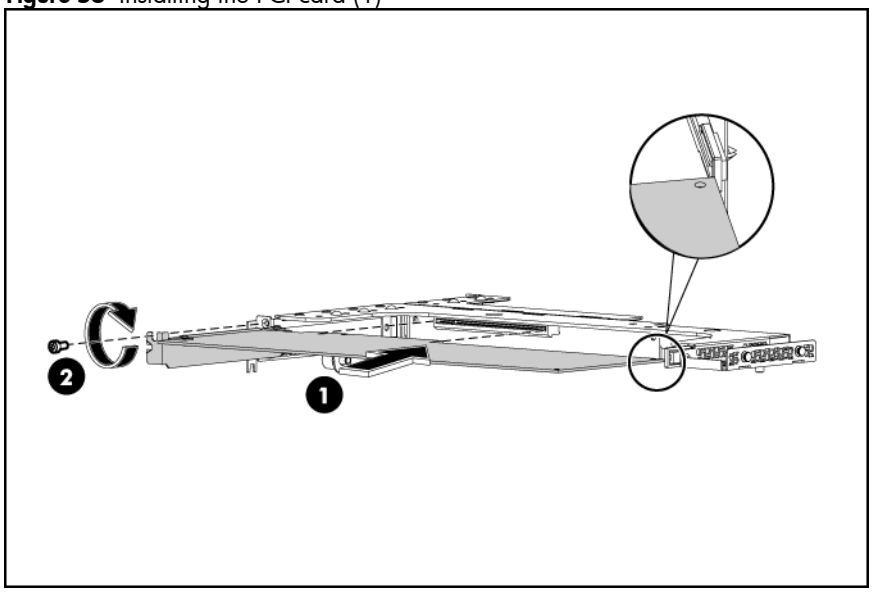

Figure 59 Installing the PCI card (2)

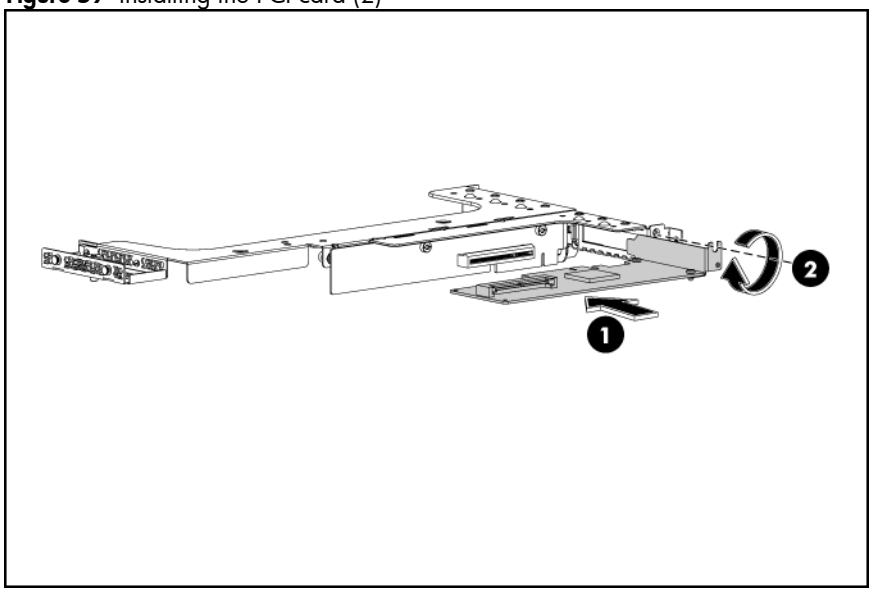

To reinstall the PCI cage:

1. Installing the PCI riser card into the system.
   a. Align the PCI card with the open expansion slot.
   b. Press the PCI card straight down into the expansion slot on the system board.
2. Align the PCI cage to the system board expansion slot, and then press it down to ensure full connection to the system board.
3. Tighten the two captive screws to secure the PCI cage to the chassis.

Figure 60 Installing the PCI cage with PCI card

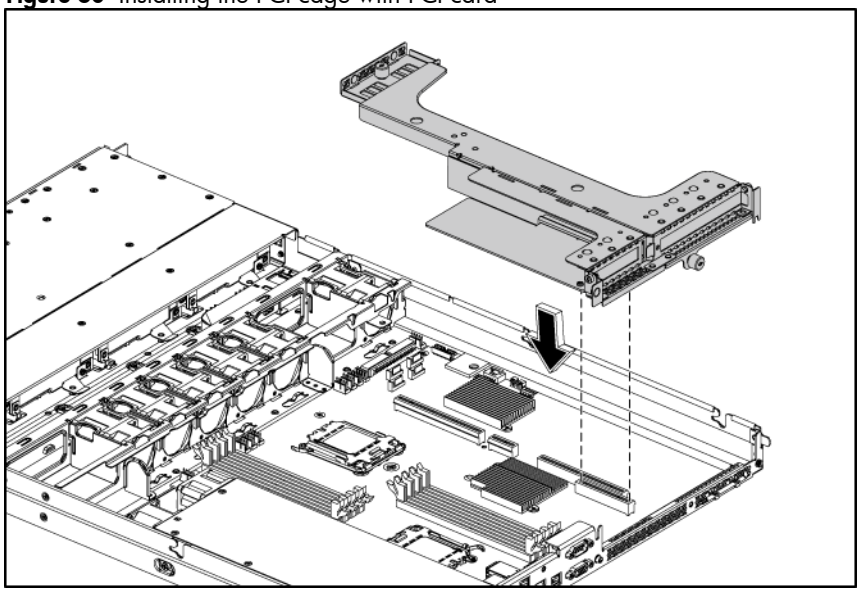

Figure 61 Securing the PCI cage

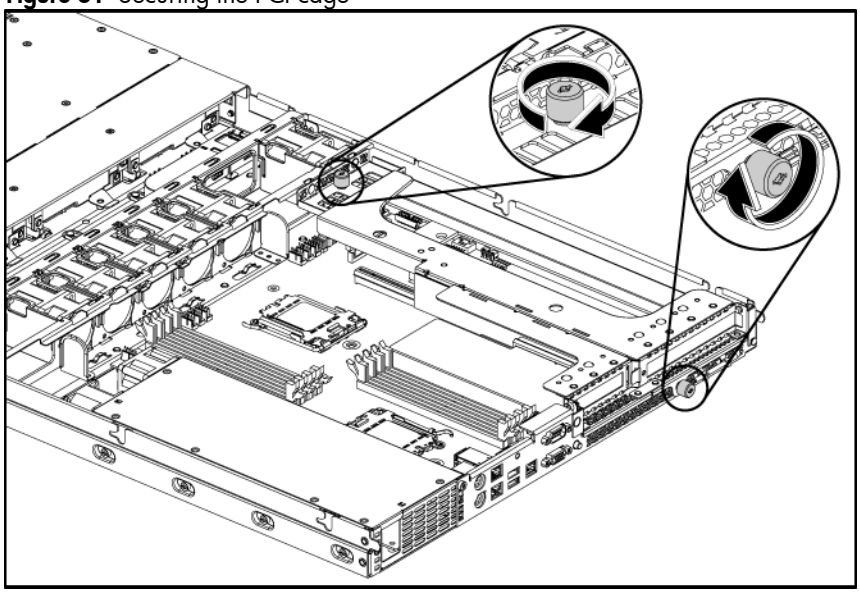

4. Connect the necessary cable(s) to the board.

System Battery

The server uses nonvolatile memory that requires a battery to retain system information when power is removed.

This 3-volt lithium coin cell battery is located on the system board.

Figure 62 System battery location

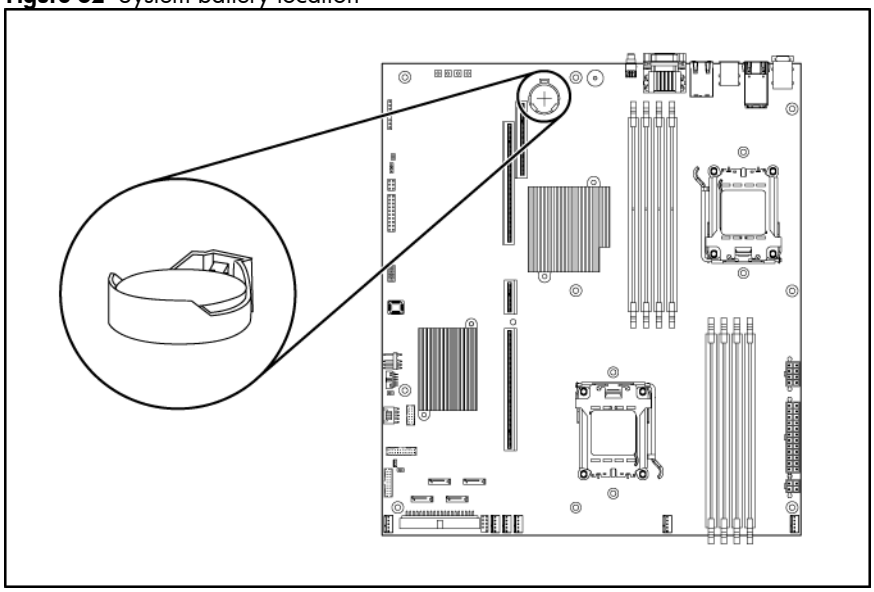

WARNING: Note the following reminders when replacing the system battery:

- Replace the battery with the same type as the battery recommended by HP. Use of another battery may present a risk of fire or explosion.
- A risk of fire and chemical burn exists if the battery is not handled properly. Do not disassemble, crush, puncture, or short external contacts, or expose the battery to temperatures higher than 60°C (140°F).
- Do not dispose of used battery in water or fire. Dispose of used batteries according to manufacturer's instructions.

CAUTION: Loss of BIOS settings occurs when the battery is removed. You must reconfigure BIOS settings whenever you replace the battery.

NOTE: If the server no longer automatically displays the correct date and time, you may need to replace the system battery. Under normal usage, battery life is five to ten years.

To replace the system battery:

1. To release the battery from its holder, squeeze the metal clamp that extends above one edge of the battery. When the battery pops up, lift it out.
2. To insert the new battery, slide one edge of the replacement battery under the holder's lip with the positive side up. Push the other edge down until the clamp snaps over the other edge of the battery.

Figure 63 Replacing the battery

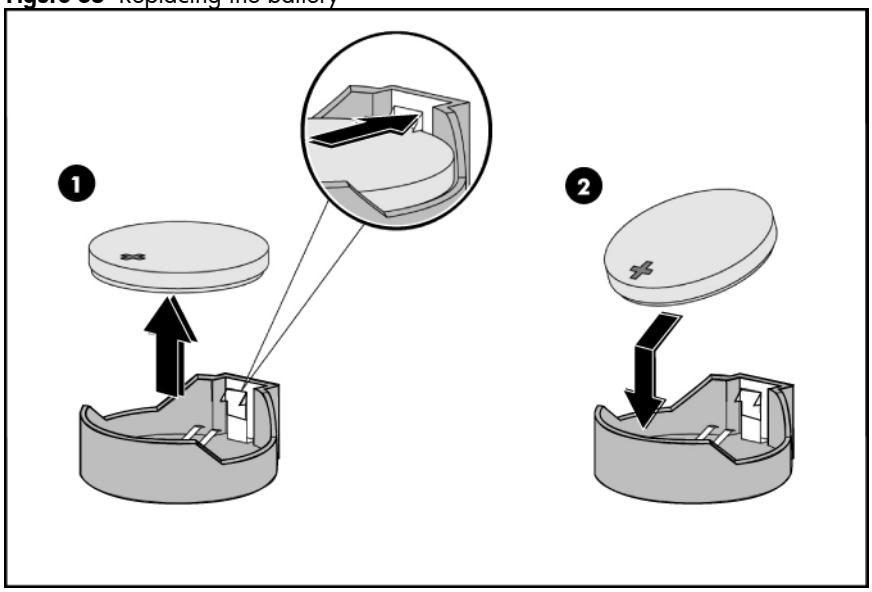

System Board Removal and Replacement Procedure

To remove the system board:

1. Remove the top cover.
2. Loosen the nine screws that secure the system board to the chassis.
3. Slide the system board back, up and out of the chassis. Remove the system board from the chassis.

Figure 64 Removing the system board

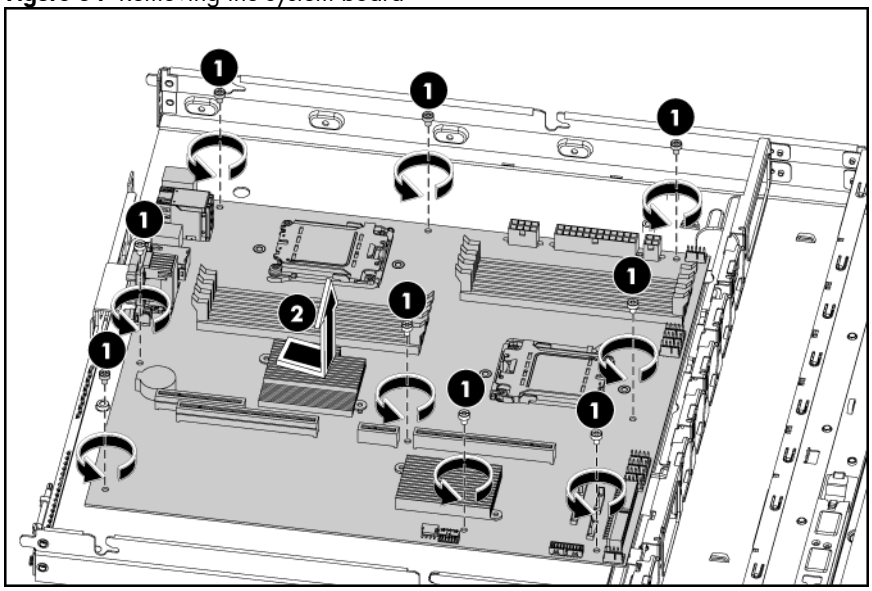

To replace the system board:

1. Align the system board I/O connectors to their openings and slide the system board into place. The nine screw holes on the chassis should align with the system board.
2. Fasten the nine screws on the system board to secure the system board to the chassis.

Figure 65 Installing the system board

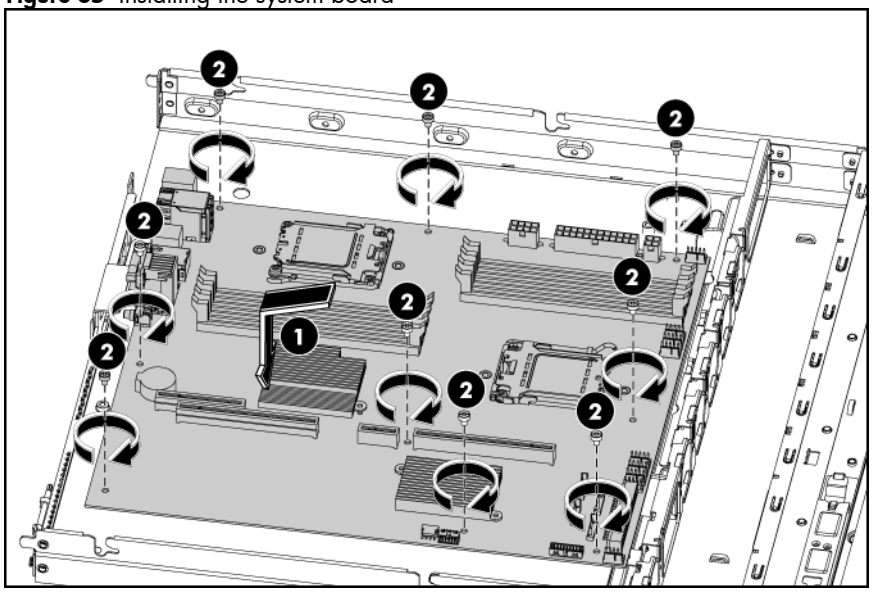

Power Supply Unit (PSU)

Located on the rear panel of the server power supply is a standard autoranging 500-watt non-hot-plug PSU.

Figure 66 Non-hot-plug Power Supply Unit

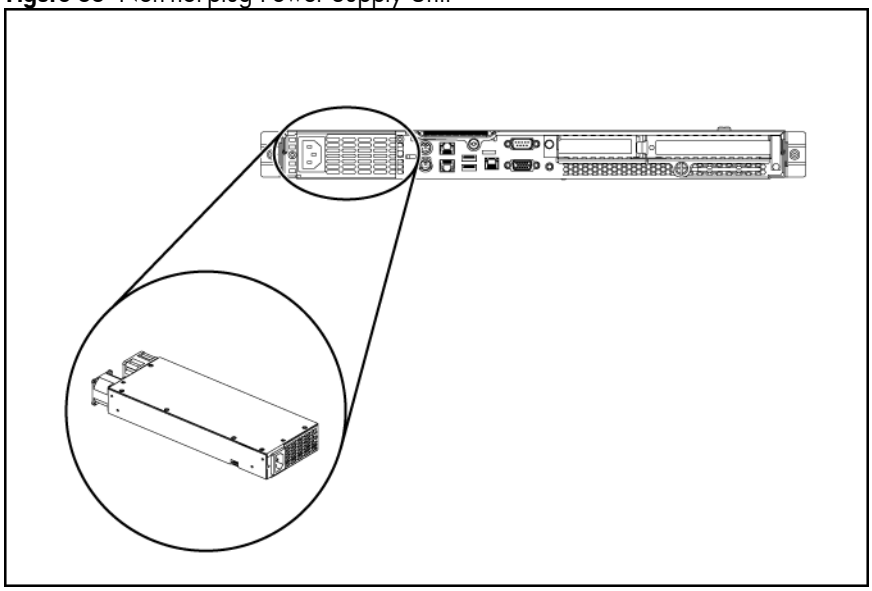

⚠ **WARNING:** Take note of the following reminders to reduce the risk of personal injury from electric shock hazards and/or damage to the equipment.

- Installation of power supply units should be referred to individuals who are qualified to service server systems and are trained to deal with equipment capable of generating hazardous energy levels.
- DO NOT open the power supply unit. There are no serviceable parts inside it.

To remove the non-hot-plug power supply:

1. Loosen the screws that secure the non-hot-plug power supply to the chassis.
2. Lift the non-hot-plug power supply from the chassis.

3. Loosen the screws that secure the bracket to the non-hot-plug power supply.

Figure 67 Removing the non-hot-plug power supply

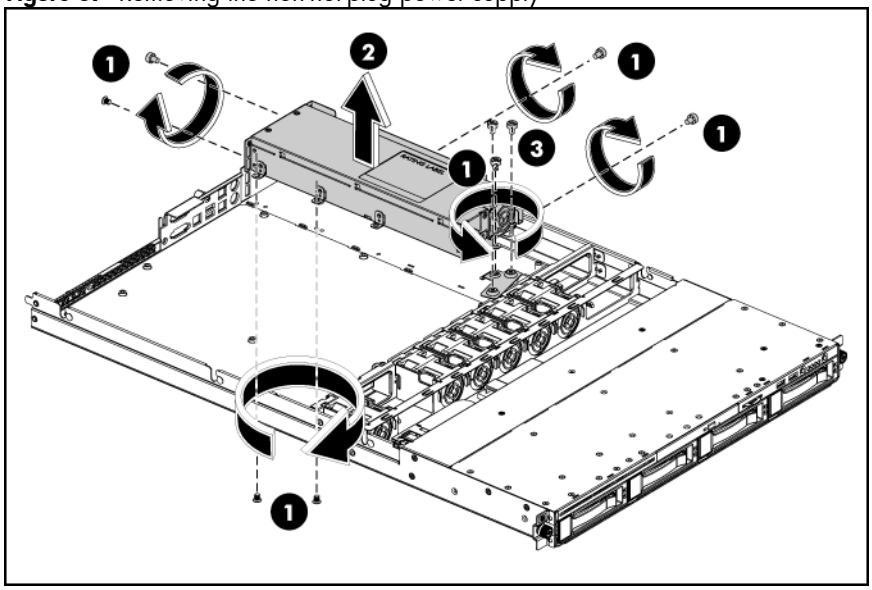

Figure 68 Remove the power supply bracket

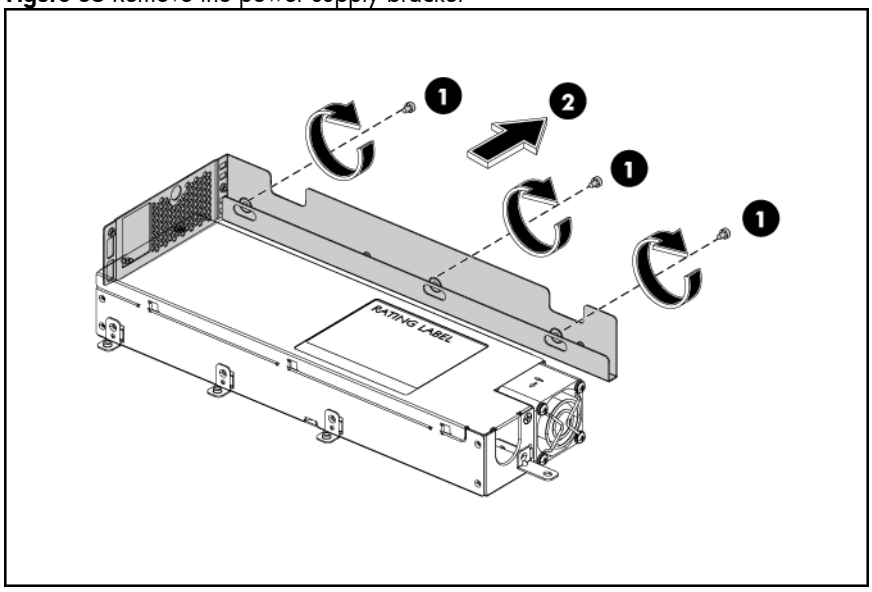

To replace the non-hot-plug power supply:

1. Fasten the screws that secure the bracket to the non-hot-plug power supply
2. Align the non-hot-plug power supply with bracket to the right location next to the motherboard.
3. Align the screw holes on the non-hot-plug power supply with the screw holes on the chassis (one on the top of the power supply, others on the sides).
4. Fasten the non-hot-plug power supply to the chassis using the screws that just been loosened.

Figure 69 Install the power supply bracket

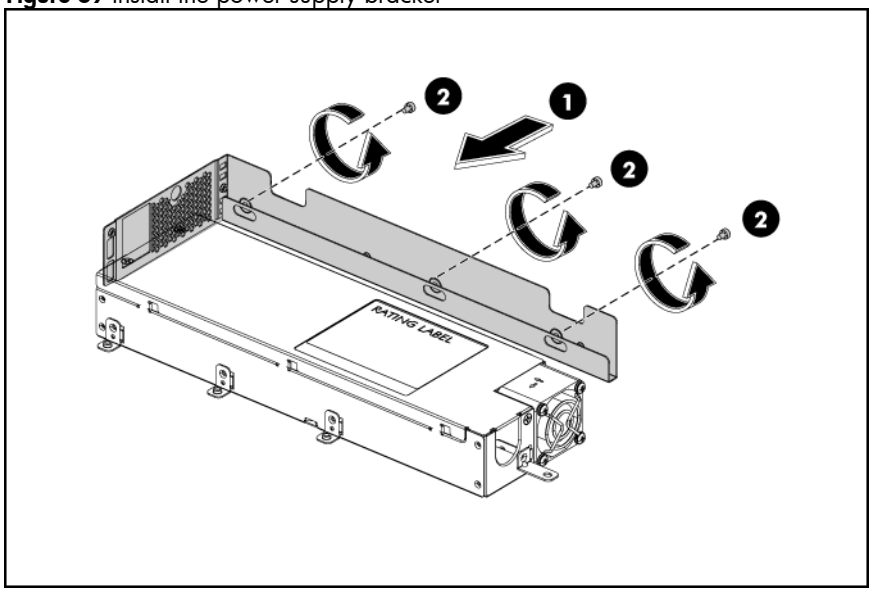

Figure 70 Installing the non-hot-plug power supply

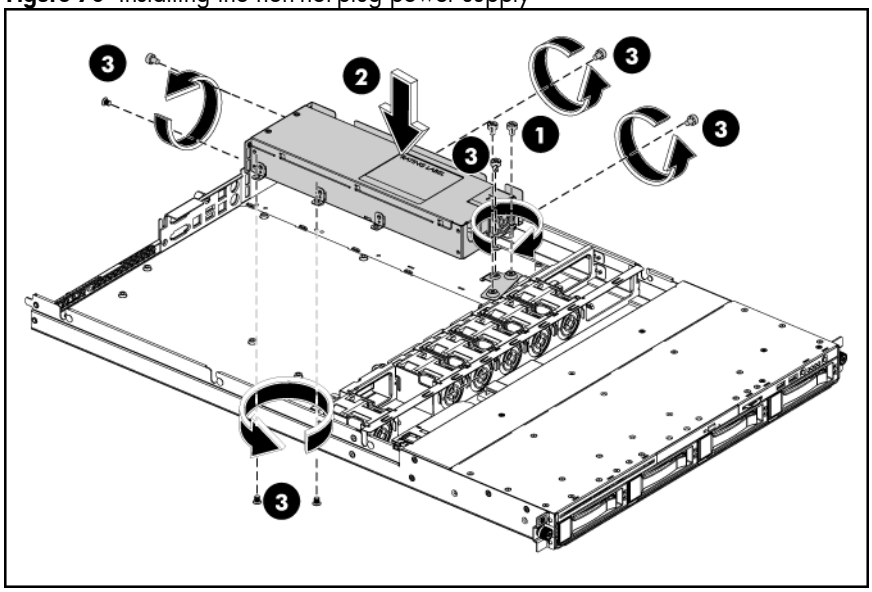

System Fan

The server has six system fans located on the chassis' center wall.

The figure below identifies the system fans by their device number and shows their corresponding cable connections.

Figure 71 System fan connections

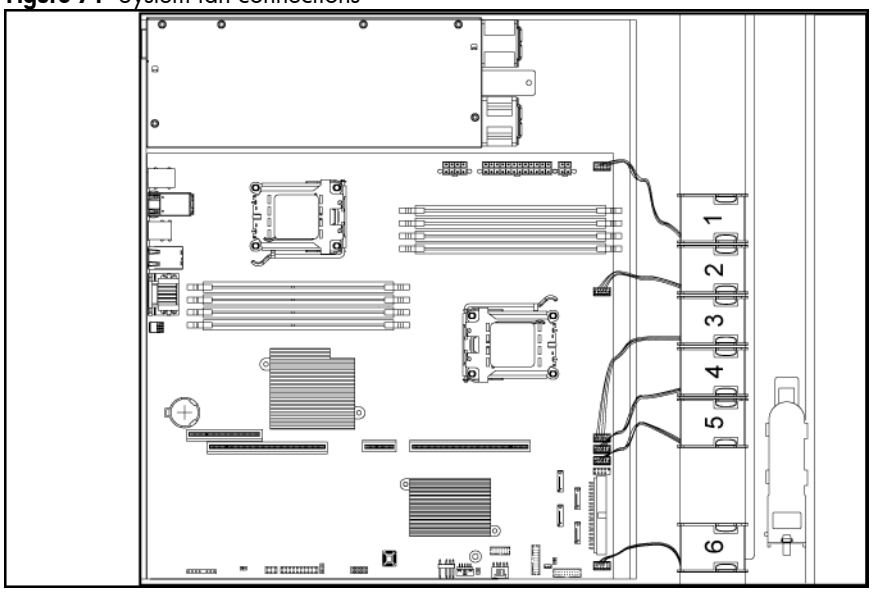

Device number	Connector
System fan 1	P12 on the system board
System fan 2	P18 on the system board
System fan 3	P13 on the system board
System fan 4	P15 on the system board
System fan 5	P17 on the system board
System fan 6	P19 on the system board
System fans 1 to 5 are for the memory modules and processors, while system fan 6 is for the PCI slots and system chipsets.	

A new system fan can be installed to allow the server to operate properly in case a default system fan becomes defective.

To remove the system fan:

1. Disconnect the fan cable from its corresponding board connector.

2. Release the fan cable from the cable clip.
3. Hold the system fan and lift it away from the chassis.

Figure 72 Removing the system fan

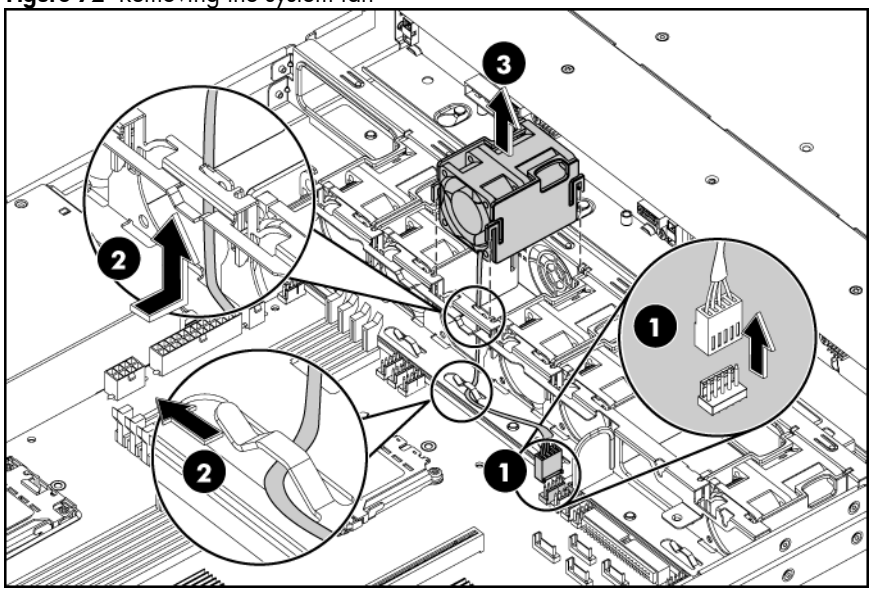

To install the system fan:

1. Put the fan cable through the system fan bracket and secure the cable using the cable clip on the chassis.
2. Hold the system fan and press it into the fan bracket.
3. Connect the fan cable to its corresponding board connector.

Figure 73 Installing the system fan

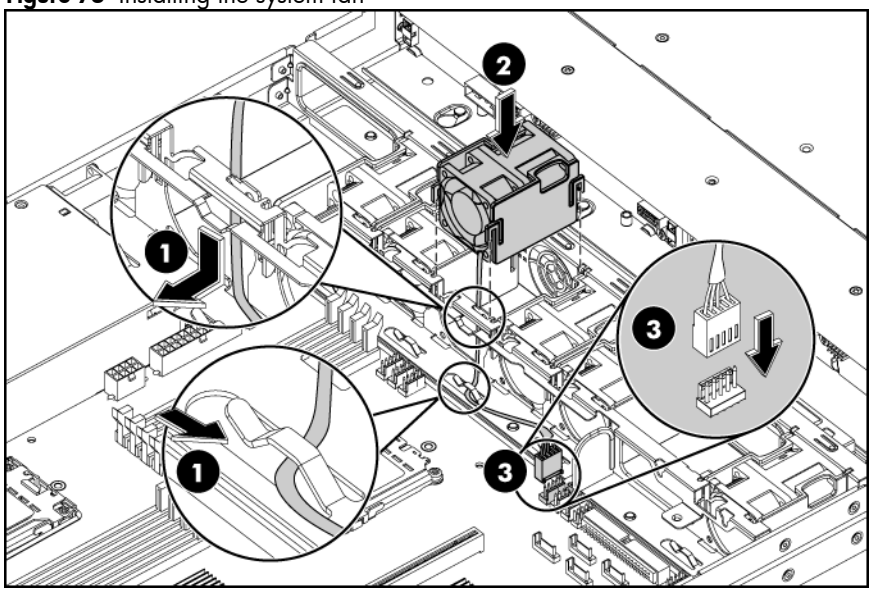

Diagnostic tools and Setup Utilities

This chapter provides an overview of the Power-On Self-Test (POST), the POST error messages, and BIOS, SAS and SATA setup utilities.

BIOS Software

The server uses BIOS to boot up the system. BIOS software is a ROM-based firmware that allows reliability, manageability, and connectivity for server platforms. This software contains a set of programs permanently stored in an EEPROM chipset located on the system board. These programs assist in managing, initializing, and testing the hardware devices installed on the computer.

BIOS software allows you to:

- Perform configuration from the BIOS Setup Utility

  Using the Setup Utility, you can install, configure, and optimize the hardware devices on the system board. In addition, you can set various features such as serial console redirection, PXE boot, and much more.
- Initialize hardware at boot up using POST routines

  During power-on or warm reset, the BIOS perform Power-On Self-Test (POST) routines to test system components, to allocate resource for various hardware devices, and to prepare the system to boot to various operating systems.

BIOS Setup Utility

The HP server BIOS Setup Utility is used to configure five primary menu selections:

- Main
- Advanced
- Boot
- Security
- Exit

Accessing the BIOS Setup Utility

1. Turn on the monitor and server.

   If the server is already turned on, save your data and exit all open applications, then restart the server.
2. When the HP logo is displayed during POST, press F10 into BIOS Setup Utility. If you fail to press F10 before POST is completed, you will need to restart the server.
3. The first page displayed is the Main menu showing the Setup Utility menu bar. Use the left (←) and right (→) arrow keys to move between selections on the menu bar. Use the up (↑) and down (↓) arrow keys to select items within a menu.

Navigating through the Setup Utility

Use the keys listed in the legend bar on the right of the Setup screen to navigate through the various menu and submenu screens of the Setup Utility. Table 11 lists these legend keys and their respective functions.

Table 11 Setup Utility Navigation Keys

Key	Function
← and →	To move between selections on the menu bar.
↑ and ↓	To move the cursor to the field you want. The currently selected field is highlighted. The right side of each menu screen displays a field help panel—Item Specific Help panel. This panel displays the help text for the currently selected field. It updates as you move the cursor to each field.
<+>, <–>	To select a value for the currently selected field (only if it is user-configurable). A parameter that is enclosed in square brackets is user-configurable. Grayed-out parameters are not user-configurable for one of the following reasons: • The field value is auto-configured or auto-detected. • The field value is informational only. • The field is password-protected.
Enter	To select a field value or display a submenu screen. Displays more option for items marked with ▶
Esc	If you press this key: • On one of the primary menu screens, the Exit menu displays. • On a submenu screen, the previous screen displays. • When you are making selections from a pop-up menu, the pop-up closes without making a selection.
F1	To bring up the General Help window. The General Help window describes other Setup navigation keys that are not displayed on the legend bar.
F2, F3	To change BIOS Setup Utility screen colours.
F7	Discard any changes you have made.
<Page Up> and <Page Down>	Moves the cursor to the first/last item (each menu), the item will be display highlight.
<Home> and <End>	Moves the cursor to the first/last item (each menu), the item will be display highlight.
F9	To load default system values.
F10	To save changes and close the Setup Utility.

Figure 74 Setup utility general help screen

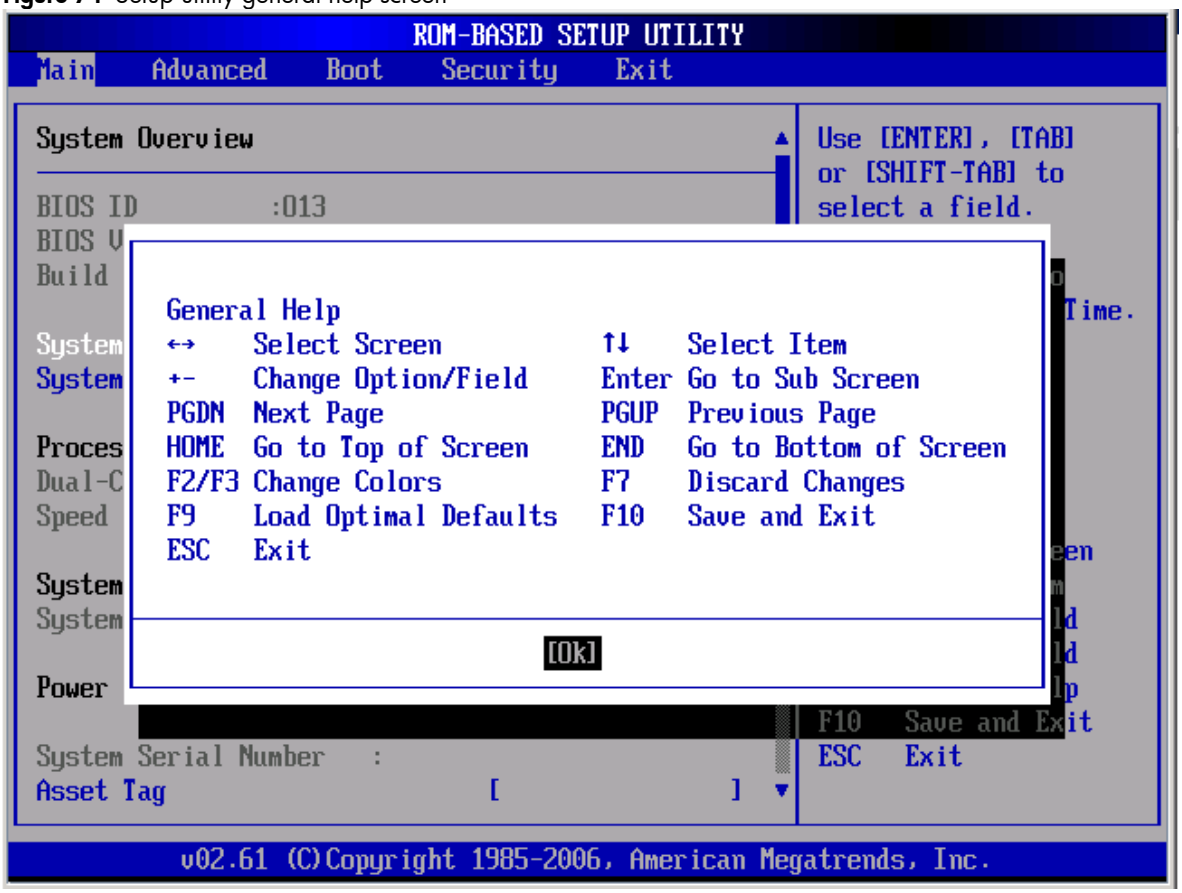

Press **F1** to get the general help message box.

Setup Utility Menu Bar

The BIOS Setup Utility provides a menu bar with the menu selections. The menu bar choices are described in the topics below.

Main Menu

Figure 75 Main menu of the BIOS setup utility

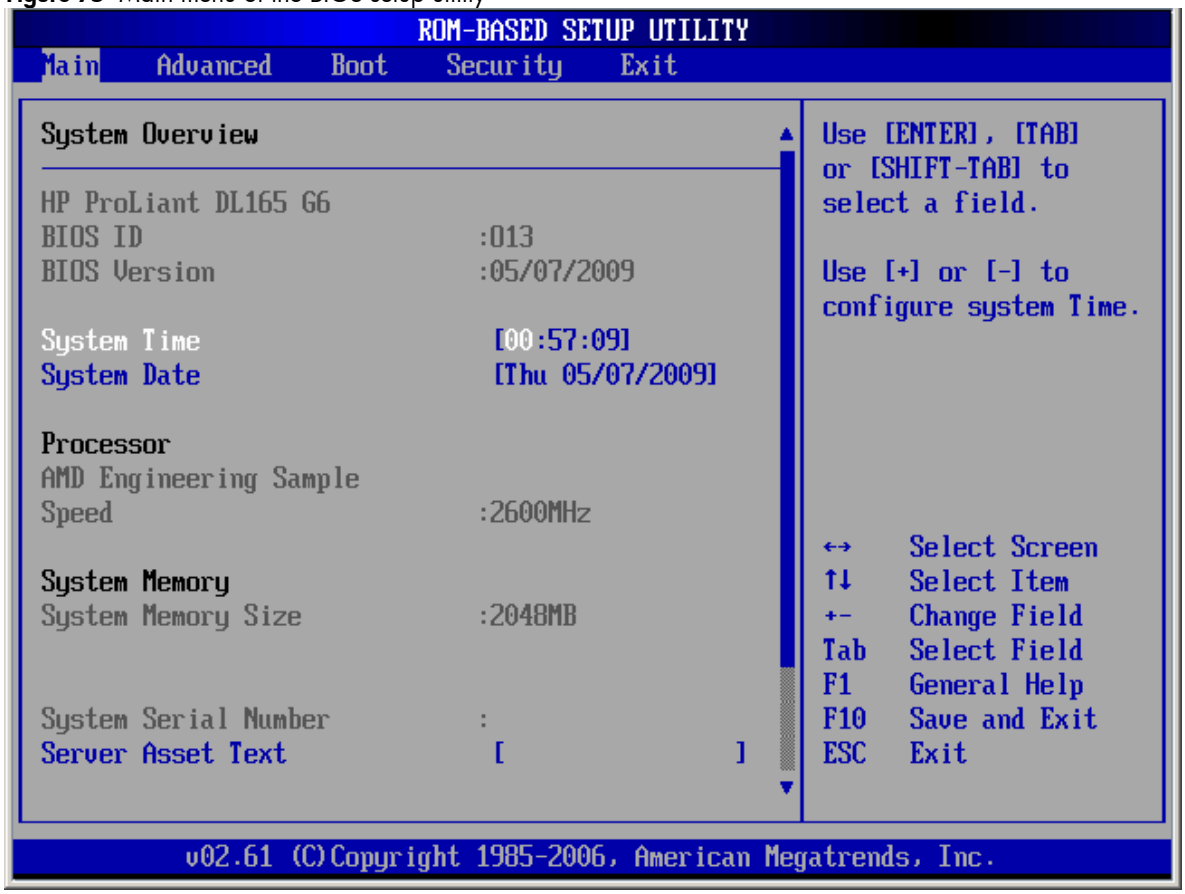

Figure 76 Main menu of the BIOS setup utility

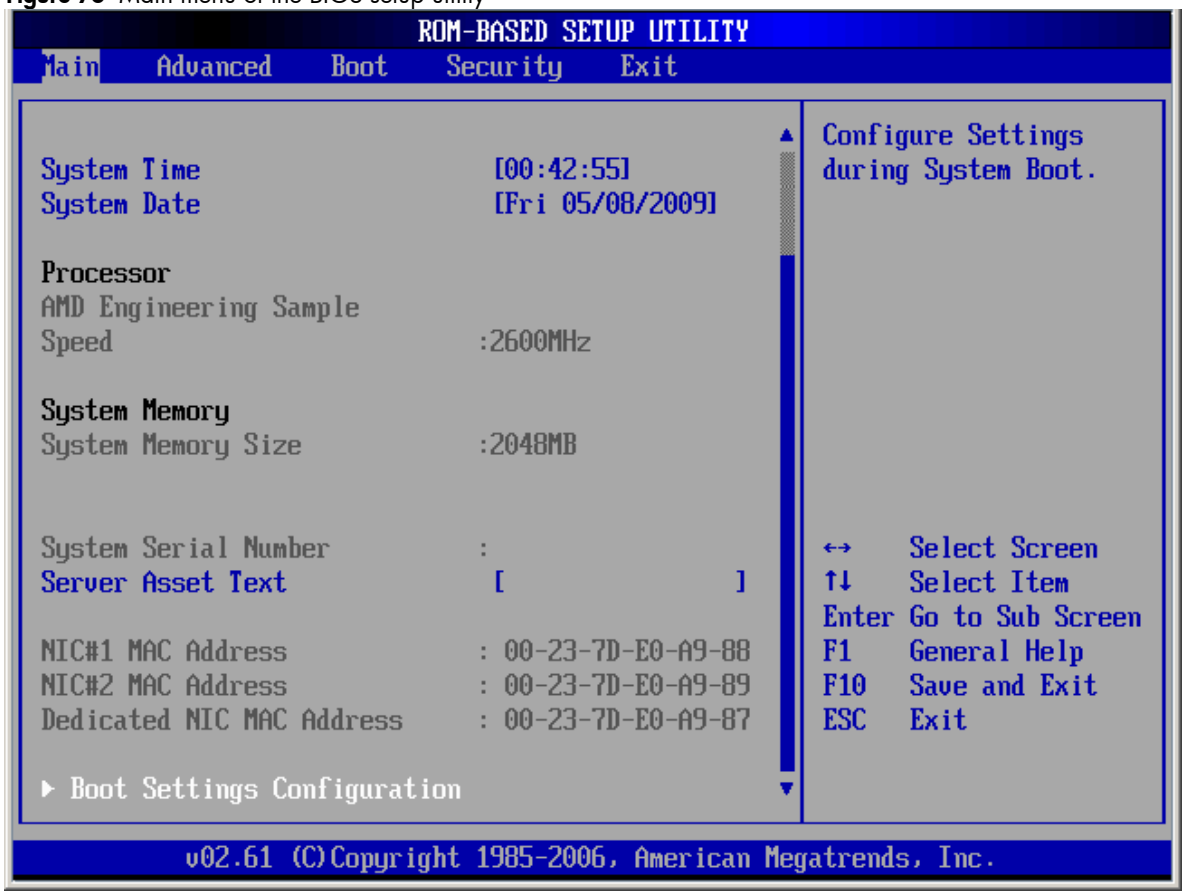

Use this menu to set the system time and date, and configure the following items:

- View BIOS build date and version.
- View CPU type / CPU speed.
- View System memory size.
- View System serial number.
- View MAC address for the embedded NIC.
- Set Server Asset Tag.
- Set system time and date.
- Set boot features:
  - Enable or Disable the BIOS summary display.
  - Turn on or off Bootup Num-Lock.
  - Set restore on AC power loss options, such as last state, power off, and power on.
  - If BIOS displays an error message, set POST F1 Prompt for selections, such as delayed, enabled, or disabled.

Advanced Menu

Figure 77 Advanced menu of the BIOS setup utility

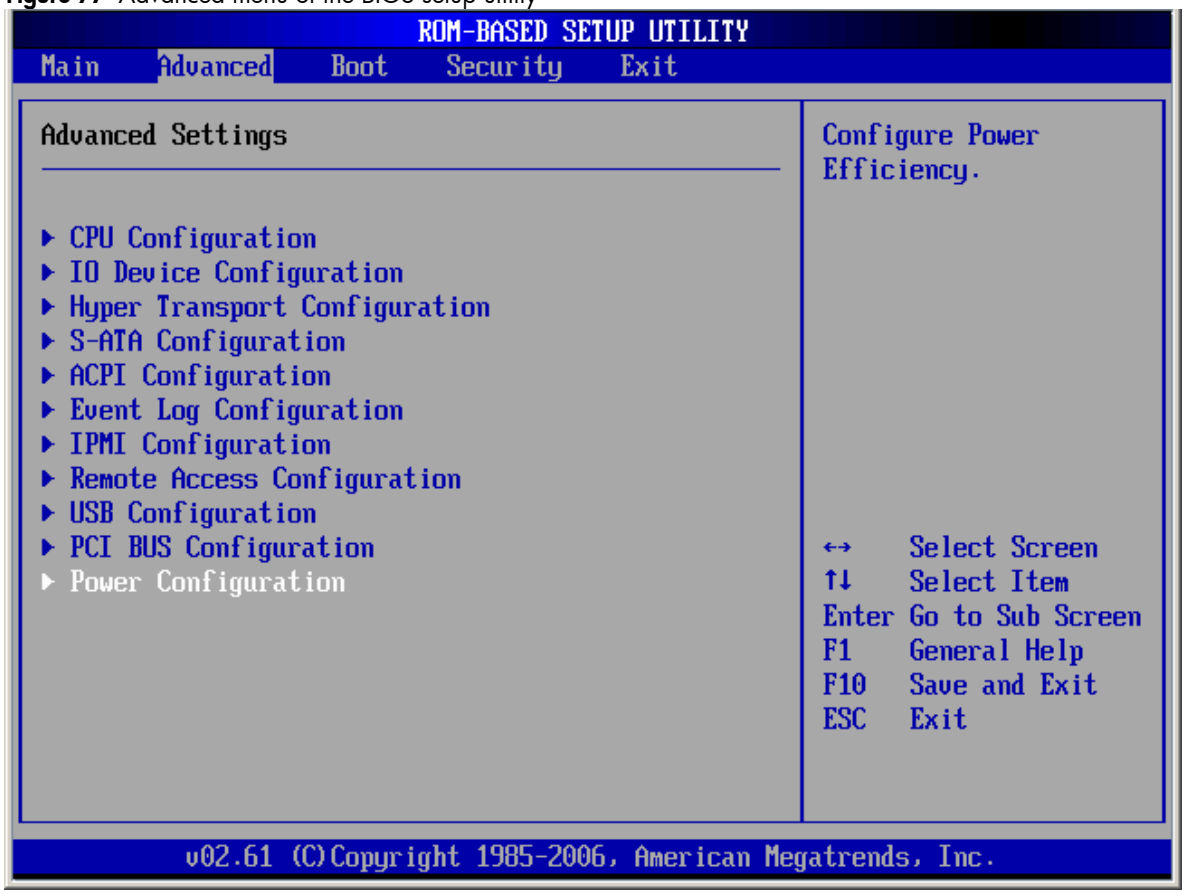

⚠ **WARNING:** Incorrect settings may cause the server to malfunction. To correct the settings, press F9 key to restore the default settings.

- **CPU Configuration** — Configure and view the current CPU configuration and settings.
- **IO Device Configuration** — Configure Super IO chipset SCH4307.
- **Hyper Transport Configuration** — Configure HT Links.
- **S-ATA Configuration** — Configure Server Works HT 1000 SATA.
- **ACPI Configuration** — Section for Advanced ACPI configuration.
- **Event Log Configuration** — Mark as read, clear or view event log.
- **IPMI Configuration** — IPMI Configuration including server monitoring and event log.
- **Remote Access Configuration** — Configure Remote Access.
- **USB Configuration** — Configure the USB support.
- **PCI BUS Configuration** — Configure video card support function.
- **Power Configuration** — Configure Power function.

Figure 78 IPMI submenu of the BIOS setup utility

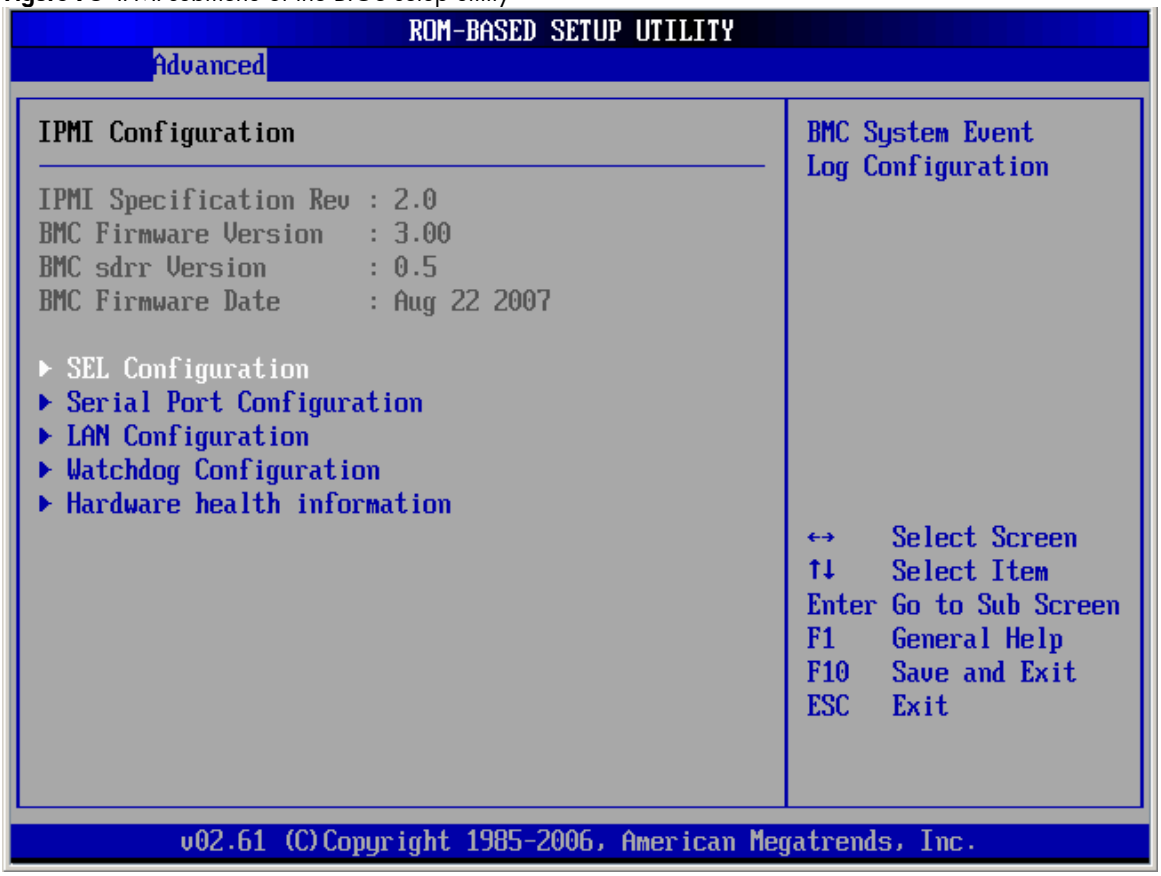

- **SEL Configuration** — Configure of the BMC System Event Log.
- **Serial Port Configuration** — Select to configure system serial ports.
- **LAN Configuration** — Select for LAN configuration.
- **Watchdog Configuration** — Select to configure POST Watchdog Timer Action and BMC Watch Dog Time Out.
- **Hardware health information** — Select to get information about CPU temperature, ambient temperature, CPU fan speed, system fan speed and chassis fan speed.

Boot Menu

Figure 79 Boot menu of the BIOS setup utility

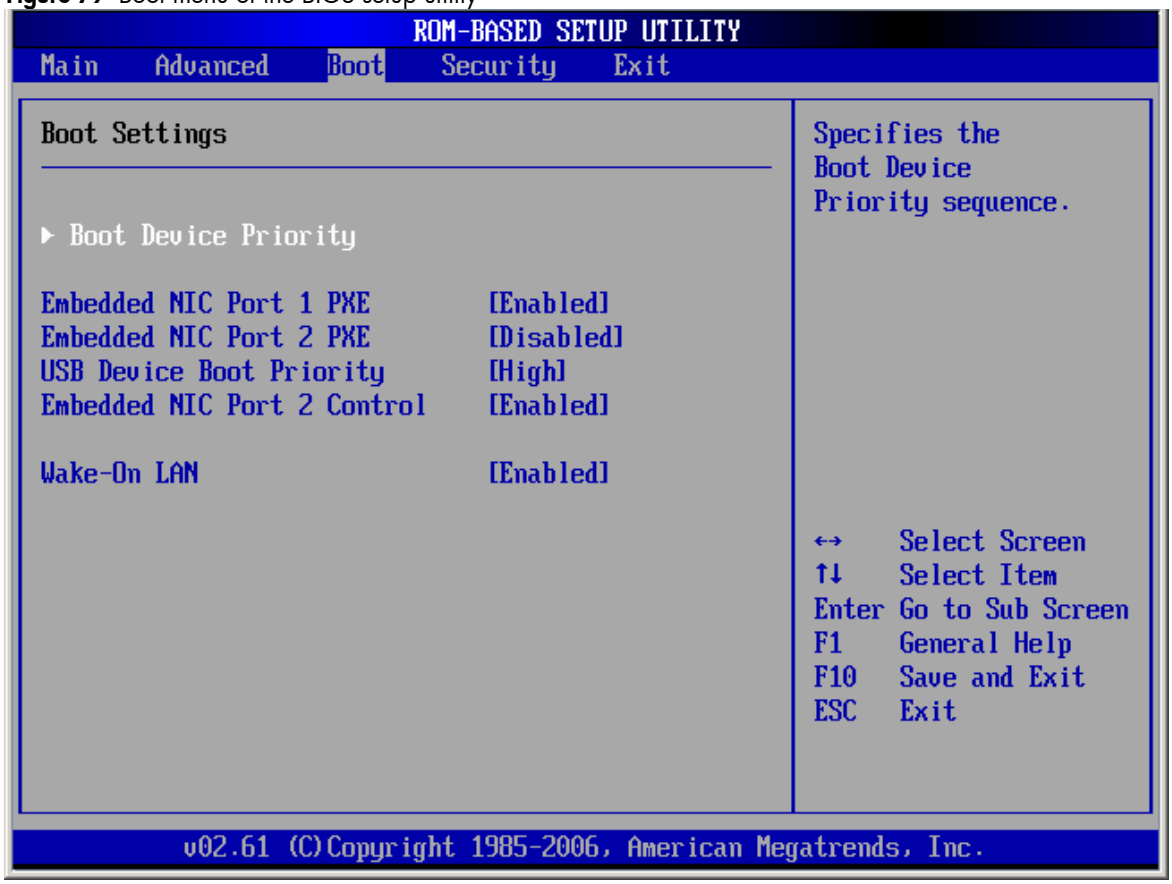

Use this menu to configure the boot priority.

- **Boot Device Priority** -- Use this screen to specify the order in which the system checks for a boot device.
- **Embedded NIC Port 1 PXE** -- Use this screen to configure the embedded NIC Port 1 PXE boot option. The default is enabled.
- **Embedded NIC Port 2 PXE** -- Use this screen to configure the embedded NIC Port 2 PXE boot option. The default is disabled.
- **USB Device Boot Priority** -- Use this screen to control the latest added USB Functions by setting the item to the desired value.
- **Embedded NIC Port 2 Control** -- Use this screen to configure the embedded NIC Port 2 Control boot option. The default is enabled.
- **Wake-On LAN** -- Use this screen to configure the Wake-On LAN boot option. The default is enabled.

Security Menu

Figure 80 Security menu of the BIOS setup utility 1

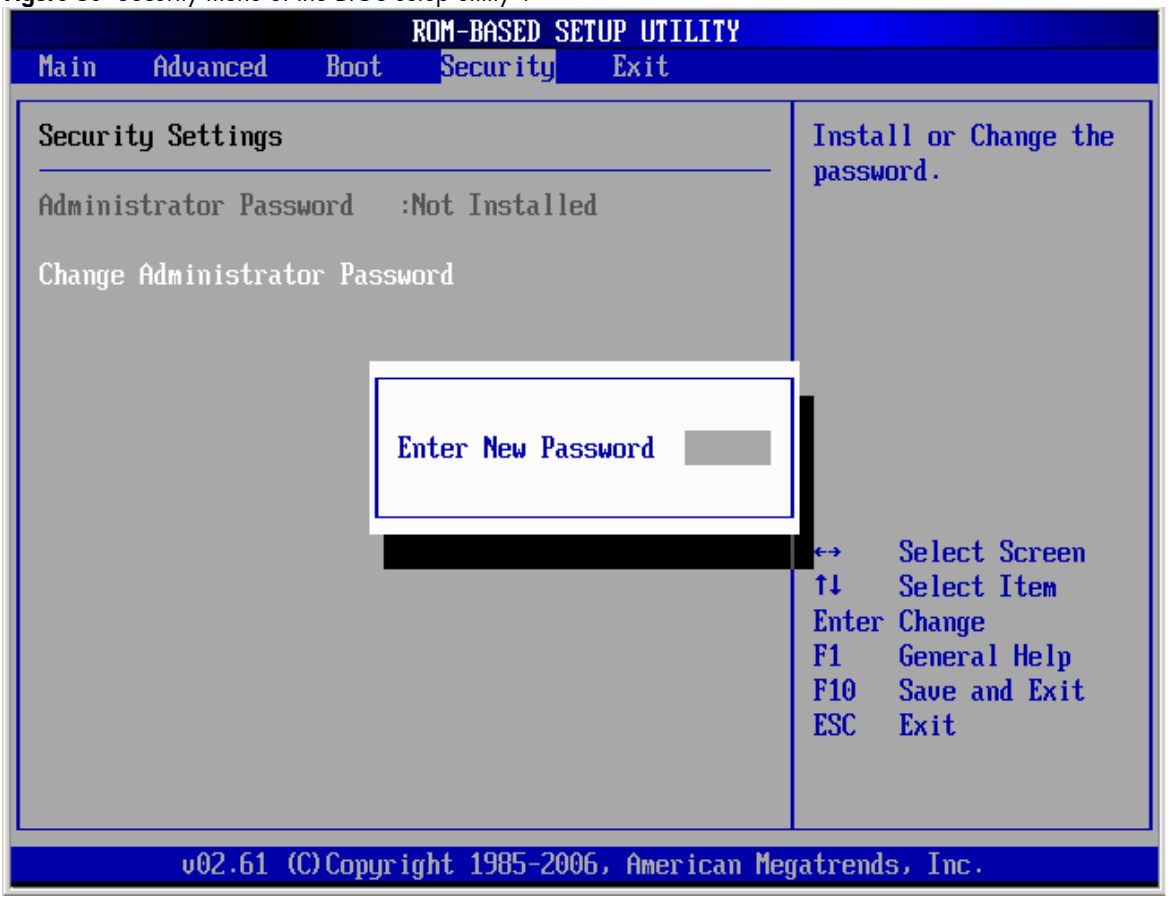

Figure 81 Security menu of the BIOS setup utility 2

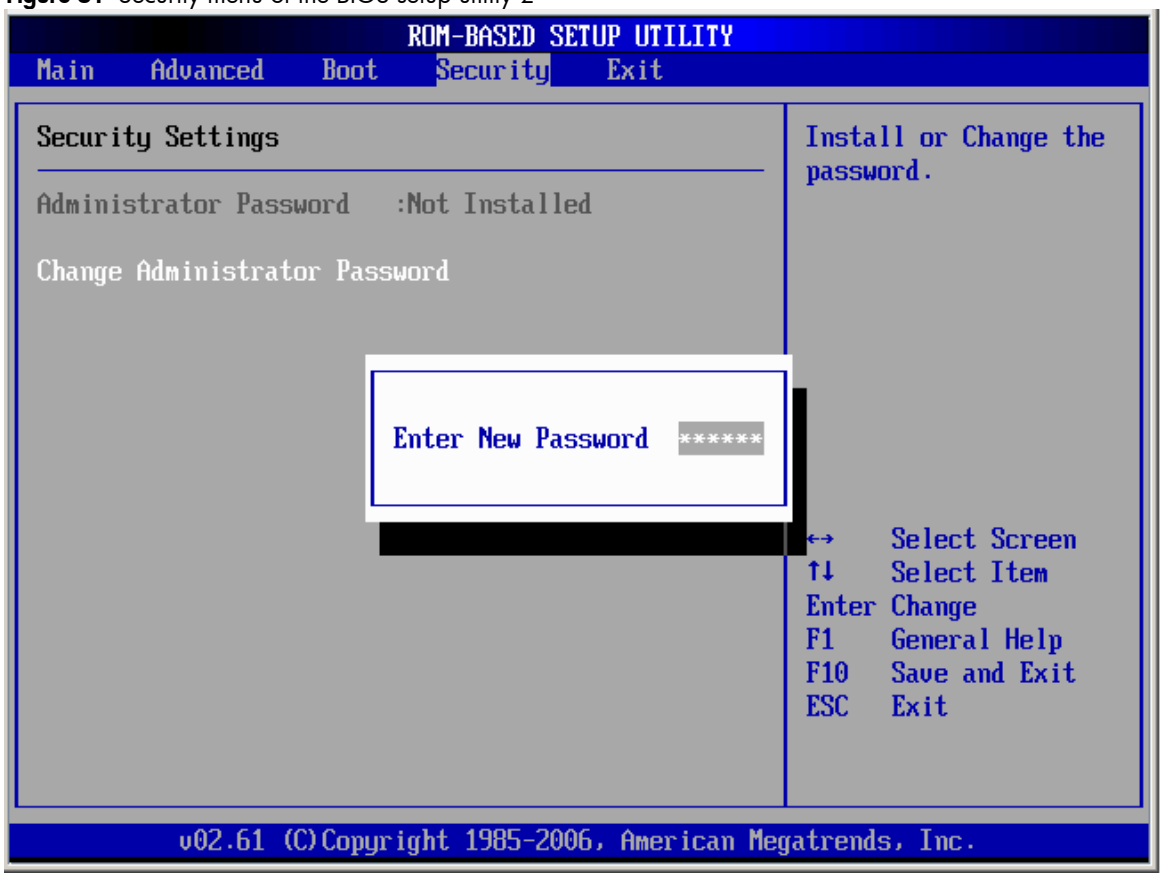

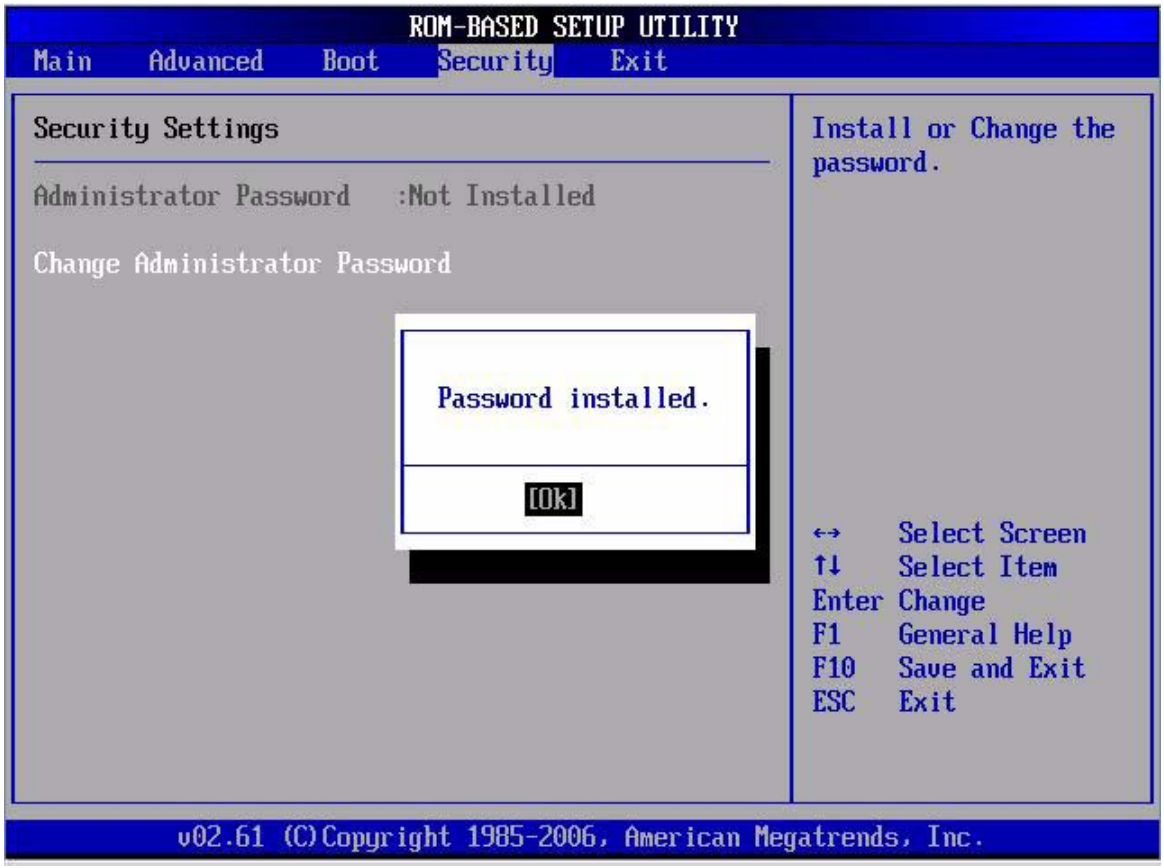

Use this menu to configure the following items:

- **Administrator Password** -- Display if an administrator password is Set or Not.
- **Change Administrator Password** -- Allows you to access and change all settings in the Setup Utility. The administrator password allows you to configure access for system users.

To set a new administrator password:

1. In the Security screen, select a set password field - **Change Administrator Password**, and then press **Enter**.
2. Type a new password in the **Enter New Password** box.
3. The password may consist of up to six characters. Alphanumeric characters (A-Z, a-z, 0-9) are recommended to avoid system error.
4. Retype the password to verify the first entry, and then press **Enter**.
5. Press **F10** to close the Setup Utility.
6. After setting the password, Setup automatically sets the password check to **Setup**.

Exit Menu

Figure 82 Exit menu of the BIOS setup utility



Use this menu to save changes or discard changes. When you save and exit, the server reboots.

- **Save Changes and Exit** -- Save the changes you have made and exit the BIOS Setup Utility. (You can also press **F10** key.)
- **Discard Changes and Exit** -- Exit the BIOS Setup Utility without saving the changes you have made. (You can also press **Esc** key.)
- **Discard Changes** -- Discard any changes you have made. (You can also press **F7** key.)
- **Restore Default Settings** -- Restore the default values for all items. (You can also press **F9** key.)

BIOS Update

Perform the steps below to update BIOS:

1. Download the Smart Component (SPxxxxx.exe) to a directory on your hard drive.
2. Execute (SPxxxxx.exe) and followed with direction to complete the steps. "ProLiant Flash Update" interface will appear.
3. Select items which need to execute:
   - Create a bootable ROMPaq diskette.
   - Create a bootable ROMPaq USB Key.
   - Create a bootable ROMPaq CD.
   - ROMPaq Diskette Flat Files.
   - Create a label for the ROMPaq diskette.

- Network ROM Flashing Capabilities.

4. Reboot DL165 G6 Server with one of the above bootable devices and make sure the BIOS setting allows booting from the USB disk.
5. Follow the on-screen instructions to finish the flashing of the BIOS.

Clear CMOS

You may need to clear the Setup configuration values (CMOS) if the configuration has been corrupted, or if incorrect settings made in the Setup Utility have caused error messages to be unreadable.

To clear CMOS:

1. Perform the Pre-Installation Procedure.
2. If necessary, remove any accessory boards or cables that prevent access to the system configuration switch.
3. Locate the system configuration button (SW4) on the system board.
4. Press the button. AC power must not be connected.
5. Perform the Post-installation instructions.
6. During POST, press **F10** to access the Setup Utility.
7. Load setup defaults by pressing **F9**.
8. Set time, date, and other system values.
9. Press **F10** to close the Setup Utility.

NOTE: Clearing CMOS restore all system configurations and password default settings.

Power-On Self-Test (POST)

Before you can use a server, all devices must be tested and initialized, and the operating system must be bootstrapped to the memory. This is referred to as Power–On Self-Test or POST. POST is a series of diagnostic tests that checks firmware and hardware components on the system to ensure that the server is properly functioning. This diagnostic function automatically runs each time the server is powered on.

These diagnostics, which reside in the BIOS ROM, isolate server-related logic failures and indicate the board or component that you need to replace, as indicated by the error messages. Most server hardware failures will be accurately isolated during POST. The number of tests displayed depends on the configuration of the server.

During POST you can:

- Press **ESC** to go to POST boot progress display system summary screen.
- Press **F10** to access the Setup Utility.
- Press **F12** to request a network boot (PXE).

POST Error Indicators

When POST detects a system failure, it displays a POST error message.

POST Error Message Definition

Whenever a non-fatal error occurs during POST, an error message describing the problem appears onscreen. These error messages are displayed in normal video (white text on black background), and show the details of the error. The following is an example of a POST error message:

```
012 --- CMOS Date/Time not set
```

Table 12 lists the most common POST error messages with corresponding troubleshooting recommendation. HP recommends that you correct the error, even if the server appears to boot successfully.

Table 12 POST Error Message

Error-Code	Error Message	Description / Corrective Action
000	Timer Error	Indicates an error while programming the count register of channel 2 of the 8254 timer. This may indicate a problem with system hardware. Requires repair of the system board.
003	CMOS Battery Low	CMOS Battery is low. This message usually indicates that the CMOS battery needs to be replaced. It could also appear when the users intentionally discharge the CMOS battery.
004	CMOS setting Wrong	CMOS settings are invalid. This error can be resolved by using F9 to load optimal default in the Setup Utility.
005	CMOS checksum bad and boot in a safe configuration, please reboot again for optimal default settings.	CMOS contents failed the Checksum check. Indicates that the CMOS data has been changed by a program other than the BIOS or that the CMOS is not retaining its data due to malfunction. This error can be resolved by using F9 to load optimal default in the Setup Utility.
008	Unlock keyboard	PS2 keyboard is locked. Users need to unlock the keyboard to continue the BIOS POST.
009	PS2 Keyboard not found	Keyboard not working. Verify that the keyboard cable is securely connected to the keyboard port (not the mouse port) on the rear panel of the server. If the problem persists, replace the keyboard or contact your HP Customer Support provider.
012	CMOS Date/Time not Set	The CMOS Date and/or Time are invalid. This error can be resolved by readjusting the system time in the Setup Utility.
019	PS2 mouse not found	Mouse not working. Verify the mouse cable is securely connected to the mouse port (not the keyboard port) on the rear panel of the server. If the problem persists, replace the mouse or contact your HP Customer Support provider.

Table 12 POST Error Message

Error-Code	Error Message	Description / Corrective Action
048	Password check failed	Password is incorrect after retried a few times. Users might need to reset the password.
04C	Keyboard/Interface Error	Keyboard controller failed test. This may indicate a problem with system hardware.
04D	Primary Master Hard Disk Error	The IDE/ATAPI device configured as Primary Master could not be properly initialized by the BIOS. This message is typically displayed when the BIOS is trying to detect and configure IDE/ATAPI devices in POST.
04E	Primary Slave Hard Disk Error	The IDE/ATAPI device configured as Primary Slave could not be properly initialized by the BIOS. This message is typically displayed when the BIOS is trying to detect and configure IDE/ATAPI devices in POST.
04F	Secondary Master Hard Disk Error	The IDE/ATAPI device configured as Secondary Master could not be properly initialized by the BIOS. This message is typically displayed when the BIOS is trying to detect and configure IDE/ATAPI devices in POST.
050	Secondary Slave Hard Disk Error	The IDE/ATAPI device configured as Secondary Slave could not be properly initialized by the BIOS. This message is typically displayed when the BIOS is trying to detect and configure IDE/ATAPI devices in POST.
051	Master Hard Disk Error	The IDE/ATAPI device configured as Master in the 3rd IDE controller could not be properly initialized by the BIOS. This message is typically displayed when the BIOS is trying to detect and configure IDE/ATAPI devices in POST.
052	Master Slave Disk Error	The IDE/ATAPI device configured as Slave in the 3rd IDE controller could not be properly initialized by the BIOS. This message is typically displayed When the BIOS is trying to detect and configure IDE/ATAPI devices in POST.
202	CPU mismatch detected	You should use the CPU of same frequency.
203	Unsupported processor	You should change another type of processor.
	Uncorrectable memory error	System halts after displaying this message. If the problem persists, contact HP Customer Support.

Table 12 POST Error Message

Error-Code	Error Message	Description / Corrective Action
	Microcode Error	BIOS could not find or load the CPU Microcode Update to the CPU. The message is most likely to appear when a new CPU is installed in a system board with outdated BIOS. In this situation, you must update the BIOS to include the Microcode Update for the new CPU.
	Checking NVRAM Update Failed	BIOS could not write to the NVRAM block. This message appears when the FLASH part is malfunctioning.
	Operating system not found	Operating system can not be located on any of the boot drives Verify that the priority boot drive has power and that the IDE cable is connected properly. Verify that the desired boot drive has power. Verify that the IDE cable is securely plugged into the respective system board connectors. Verify that the boot device is enabled in the Setup Utility. Verify that the boot device has an operating system installed. If the problem persists, contact your HP Customer Support provider.
60F	Fan Solution Not Sufficient! Critical Failure Detected – System Shutting Down in 15 Seconds!	The non-redundancy fan is not installed, user should install the system fan. The system will shut down.
601	BMC Not Responding	BMC not responding, you can load the optimal default value, or you must change the LO100 card.
603	System Fan 1 Missing	System fan 1 is not installed, user should install the system fan 1.
604	System Fan 2 Missing	System fan 2 is not installed, user should install the system fan 2.
605	System Fan 3 Missing	System fan 3 is not installed, user should install the system fan 3.
606	System Fan 4 Missing	System fan 4 is not installed, user should install the system fan 4.
607	System Fan 5 Missing	System fan 5 is not installed, user should install the system fan 5.
608	System Fan 6 Missing	System fan 6 is not installed, user should install the system fan 6.
610	Temperature violation Detected	Wait 5 minutes for system to cool. Press ESC key is not recommended as system may shutdown unexpectedly.

Table 12 POST Error Message

Error-Code	Error Message	Description / Corrective Action
611	System Event Log full	You must enter BIOS Setup Utility and then Clean the System Event Log.

POST Related Troubleshooting

Perform the following procedures when POST fails to run, displays error messages.

If the POST failure is during a routine boot up, check the following:

- All external cables and power cables should be firmly plugged in.
- The power outlet to the server should be connected and works correctly.
- The server and monitor are both turned on. The bicolour status LED indicator on the front panel must be lit up green.
- The monitor's contrast and brightness settings are correct.
- All internal cables are properly connected and all boards firmly seated.
- The processor is fully seated in its socket on the system board.
- The cooler assembly is properly installed on top of the processor.
- All memory modules are properly installed.
- If you have installed a PCI accessory board, verify that the board is firmly seated and any switches or jumpers on the board are properly set. Refer to the documentation provided with the accessory board.
- All internal cabling and connections are in their proper order.
- If you have changed any switches on the system board, verify that each is properly set.

Physical and Operating Specifications

This chapter provides physical and operating specifications for the HP ProLiant DL165 G6 server. Specifications include:

System Unit

Table 13 Hardware Specifications

Item	Components
Processor socket	AMD F1207
Processor support	ISL6323
Chipset	HT2100/HT1000
Hardware monitoring device	Server Engines management controller
Gigabit Ethernet controller	BCM5704C dual GbE channels support
SATA and IDE controllers	HT1000
Embedded video controller	Server Engines VGA core integrated into Pilot
I/O subsystem	• One PCIe x4 links with x8 slot • One PCIe x16 links with x16 slot
Memory	Eight Registered DDR2 800 MHz DIMM slots with ECC, up to 32 GB
Default media storage	One-half height IDE CD-ROM drive, SATA hard drive
Optional media storage	• One slim ODD drive bay for CD-ROM/DVD-ROM drive, four non-hot-plug SATA hard drives or SAS devices. • Four bays hot-plug HDD cage for SAS or SATA drives
I/O ports	PS2 keyboard port, PS2 mouse port, USB 2.0 ports (two front-mounted ports, two rear-mounted ports and one internal connector on the system board), video port, serial port and GbE port.
Status LED indicators Front panel	• UID SW/LED • Health LED • Power SW/LED • NIC #1 Activity • NIC #2 Activity • Hard Disk Activity
Non-Hot-Plug Power Supply unit	500W power supply
Thermal solution	Six system fans

Table 14 Physical Dimensions

Item	Description
System board platform	ATX (Advanced Technology Extended)
System board dimension	12'' x 13.5''
Server dimensions Rack	 448W * 43H * 698.7D (mm)
Server weight	Basic Configuration (excludes keyboard and monitor): 19 kg

Table 15 Environmental Specifications

Item	Description
Temperature: Operating Non-operating Storage Wet-bulb temperature	 +10 to +35° (+50 to +95°F) -30 to 60° (-22 to 140°F) -30 to 60° (-22 to 140°F) 38.7° (101.7°F)
Relative humidity: Operating Non-operating Storage	 10% to 90% (non-condensing) 5% to 95% 5% to 95%
Altitude: Operating Non-operating	 0 to 3049 meters (0 to 10,000 ft) 0 to 9146 meters (0 to 30,000 ft)
Thermal output (maximum operating) Acoustic emissions Normal configuration	392 W/hr LWad: 6.7 Bels (operating at room temperature) LWad: 6.7 Bels (Idle at room temperature)

Table 16 Non-Hot-Plug Power Supply Specifications

Item	Description
Dimensions (H x W x D)	40 mm x 86mm x 280 mm
Weight (approximate)	1.5 kg
Input requirements: Rated input voltage Normal line voltage	 90 VAC to 264 VAC 100 VAC to 120 VAC /200 VAC to 240 VAC
Line frequency	50Hz – 60Hz

Table 16 Non-Hot-Plug Power Supply Specifications

Item	Description
Rated input current	5.5A – 10A
BTU rating	N/A
Power supply output power: Rated steady state power Maximum peak power	 500W N/A
Temperature range: Operating Shipping	 +5 to +50 –40 to +85
Relative humidity: Operating Non-operating	 5% to 95% relative humidity, non-condensing. 5% to 95% relative humidity, non-condensing

Index

A

AC power
  power-down procedures, 39
air duck
  installing, 60
  removing, 56
AMIBIOS Setup Utility
  BIOS settings loss, 72

B

back plane
  installing, 55
  removing, 54
battery
  replacement warnings, 72
bezel blank
  removing, 45
BIOS Setup Utility
  accessing, 80
  additional navigation keys, 81
  menu bar, 80
BIOS software
  Overview, 80

C

cable connections, 43
cable management, 41
CD-ROM drive
  spare part number, 20, 21
CSR (customer self repair), 5
customer self repair (CSR), 5

D

Diagnostic tools and Setup Utilities
  BIOS Setup Utility, 80
  BIOS software, 80
  BIOS update, 91
  clear CMOS, 92
  POST, 92
Drive bay configuration, 44
drives
  cable connections, 43
  cable management, 41
  drive bay configuration, 44
  hard drives, 48
  optical media drive, 44

E

electric shock
  symbol, 38
  warning, 37
exploded view
  mechanical components, 16

H

hard drive
  installing, 48
  removing, 49, 51
Hard drive cage
  spare part number, 16
hardware configuration
  hard drives, 48
  memory, 61
  optical media drive, 44
  PCI expansion cards, 63
  power supply unit, 74
  processor, 56
  references, 36
  system battery, 71
  system fan, 77
  top cover, 39
Hardware configuration tools, 36
hardware specifications
  I/O ports, 97
  LAN controller, 97
  memory, 97
  power supply unit, 97
  processor socket, 97
  processor support, 97
  status LED indicators, 97
  thermal solution, 97
Hardware Specifications
  chipset, 97
  default media storage, 97

Hardware monitoring device, 97
I/O subsystem, 97
optional storage, 97
hazardous conditions. *See* symbols on equipment
hazardous energy circuits
symbol, 38
heat sink
installing, 60
removing, 57
hot surface
symbol, 38
warning, 37
HP
authorized reseller, 24
contact information, 24
technical support, 24
technical support requirements, 24

I

improper airflow
caution, 37

L

LAN controller, 97
LED indicators
Hard drive activity, 32
LAN, 34
optical drive activity, 30
Power/system health, 31
System board LED, 35

M

mechanical `parts
illustrated, 16
Memory module
spare part number, 20, 22
memory modules
installing, 62
module orientation, 63
removing, 62

N

non hot plug hard drive
installing, 50

O

onboard controllers
LAN, 97
storage controller, 97
optical carrier
installing, 46
Optical carrier
spare part number, 16
optical drive
activity indicator, 30
removing, 47

P

PCI cage
spare part number, 17
PCI cage
removing, 64
PCI cage
installing, 70
PCI card
installing, 69
PCI riser card expansion slots, 63
PCIe riser card
installing, 67
removing, 65, 66
PCI-E/PCI-X board
installing, 65
physical dimensions
server, 98
system board, 98
power supply
replacing, 75
Power supply cage
spare part number, 16
power supply unit. *See* PSU
Power/system health LED indicator, 31
Power-On Self Test
POST error indicators, 92
POST related troubleshooting, 96
recoverable POST errors, 93
processor
applying thermal grease, 58
installing, 59
removing, 58
Processor heat sink
spare part number, 21, 22
processor socket
specification, 97
Processors
spare part number, 20, 22

PSU
removing, 74
replacement warnings, 74
type, 97

R

Removable hard drive dummy
pare part number, 16

S

SAS/SATA hard drive
spare part number, 20
server dimensions
rack, 98
server warnings and cautions, 37
slot cover
removing, 68
specifications
physical and operating, 97
storage controller, 97
symbols on equipment, 38
system battery
replacing, 72
system board
dimensions, 98
LED, 35
platform, 98
replacing, 73
System board
spare part number, 21, 22
system covers
top cover, 39
system fan
removing, 77
replacing, 78
System fan
spare part number, 20, 21
system LEDs. *See* status LEDs
system parts
illustrated, 21
illustrated, 20

T

thermal solution, 97
top cover
reinstalling, 40
removing, 39
Top cover
spare part number, 16
top middle cover
reinstalling, 41
Top middle cover
spare part number, 16

W

warnings
battery replacement, 72
PSU replacement, 74
warranty, 5