Overview

Hot Plug SAS/SATA or Non-Hot Plug SATA Models

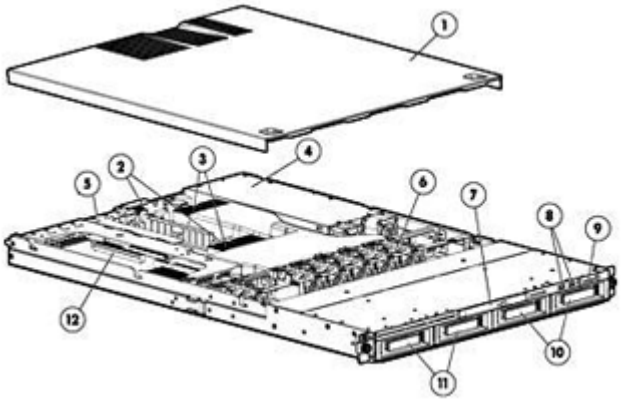

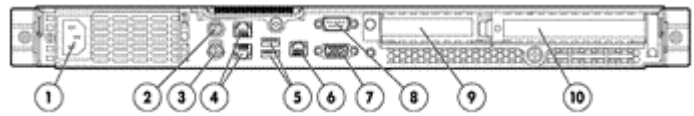

Front View:

1. Access panel
2. Memory banks
3. Two (2) AMD Opteron 2400 series processors
4. Power supply
5. Low-profile PCI-Express or PCI-X slot
6. System fans
7. Optical drive bay
8. Front-panel USB 2.0 ports
9. Power switch/system status LEDs
10. Optional 3rd and 4th 3.5" hot-plug SAS/SATA or non-hot plug SATA hard drive bays
11. Standard 1st and 2nd 3.5" hot-plug SAS/SATA or non-hot plug SATA hard drive bays
12. Full height/full length PCI-Express or HTX slot

Rear View:

1. Power supply cable socket
2. PS/2 mouse port
3. PS/2 keyboard port
4. Two (2) RJ45 GbE LAN ports
5. Rear panel USB 2.0 ports
6. Lights-Out 100 10/100Mbps port
7. Video port
8. Serial port
9. Low-profile riser board assembly slot cover
10. Full-sized riser board assembly slot cover

What's New

- Supports up to Support for SATA Hot Plug 3.5" Midline (MDL) Drives

At A Glance

Introducing the HP ProLiant DL165G6, now available with the latest high performance Opteron Six-Core processors and a new high efficiency power supply.

- Processors:
  - Supports up to two AMD Opteron™ 2400 series Six-Core processors
  - Supports DirectConnect Architecture
  - Supports Power Now
- Memory:
  - 8 DIMM slots supporting up to 32GB REG PC2-6400 DDR2-800 MHz memory with Advanced ECC
  - 8 DIMM slots supporting up to 64GB REG PC2-5300 DDR2-667 MHz memory with Advanced ECC
- Internal Drive Support:
  - Internal storage capacity:

Overview

  - SATA Capacity: Support for up to 8.0TB (4 x 2TB) with Hot Plug Model. 8.0TB (4 x 2GB) with Non Hot Plug Model
  - SAS Capacity: Support for up to 8.0 TB (4 x 2TB) with Hot Plug Model

    NOTE: Installation of the Hot Plug Backplane 1U 2S Kit (445985-B21) is required if ordering third or fourth Hard Drives for Hot Plug models only.
- Network Controller:
  - Embedded NC7782 dual-port gigabit server adapter
- Storage Controllers:
  - Non-Hot Plug SATA Models: HP Embedded SATA Controller

    NOTE: Raid support requires optional slot based raid controller
  - Hot Plug SATA/SAS Models: HP P212 Smart Array Controller
- Expansion Slots:
  - Standard - PCI-Express assembly includes:
    - Slot 1: full-length/full height PCI-Express x16
    - Slot 2: half-length/low-profile PCI-Express x4 (x8 connector) (Reserved in the Hot Plug Model for Smart Array Controller)
  - Optional - PCI-X assembly includes:
    - Slot 2: half-length/low-profile PCI-X 133 (PCI-X slots are 64 bits; 133 MHz capable)
  - Optional - HTX assembly includes: Slot 1: full-length/full height HTX
- Infrastructure Management:
  - HP Lights-Out 100i with optional LO100i Advanced Licenses for Virtual KVM and Virtual Media.
  - HP Insight Control for Linux, a product option, delivers essential infrastructure management that can help save time and money by making it easy to deploy, migrate, monitor, control and optimize your IT infrastructure through a single, simple management console. Insight Control for Linux supports Linux-based central management servers.
- USB Ports:
  - Up to five USB ports (two front & two rear standard, 1 internal option)
- Optical Drive:
  - Support for one (optional): DVD-ROM, DVD/CD RW
- Power Supply:
  - 500W High Efficiency Power Supply (Non-Hot Plug, Autoswitching)
- Form Factor:
  - Rack (1U)
  - Fixed mounting rails included with all models
- Deployment/Serviceability:
  - HP ProLiant DL165 G6 models have fixed rails which provide support for racks with round mounting holes and tool-free support for racks with square mounting holes (including Compaq/HP 7000, 9000, 10000 and HP series), with an adjustment range of 26" - 36
  - Tool-less access to all system components for easy in-rack serviceability
  - Customer Self Repair (CSR): HP products are designed with many CSR parts to minimize repair time and allow for greater flexibility in performing defective parts replacement
- Warranty:
  - This product is covered by a global limited warranty and supported by HP Services and a worldwide network of HP Authorized Channel Partners. Hardware diagnostic support and repair is available for one year from date of purchase. Support for software and initial setup is available for 90 days from date of purchase. Enhancements to warranty services are available through HP Care Pack services or customized service agreements. Hard drives have either a one year or three year warranty; refer to the specific hard drive QuickSpecs for details.

    NOTE: Server Warranty includes 3 year Next Day Parts replacement, 0-Years Labor, 0-Years Onsite support. Warranty terms may vary by region. Additional information regarding worldwide limited warranty and technical support is available at: http://h18004.www1.hp.com/products/servers/platforms/warranty/index.html.

Standard Features

NOTE: For the Standard Features shipped in the "Factory Integrated Models", please see the "Configuration Information - Factory Integrated Models" section.

Processor One of the following depending on Model	AMD Opteron™ processor Model 2435 (2.6 GHz, 75W ACP) AMD Opteron™ processor Model 2431 (2.4 GHz, 75W ACP) NOTE: Offered through Configure-To-Order only. See Factory Integrated Models section for more details. AMD Opteron™ processor Model 2427 (2.2 GHz, 75W ACP) AMD Opteron™ processor Model 2425HE (2.1 GHz, 55W ACP) AMD Opteron™ processor Model 2423HE (2.0 GHz, 55W ACP)
Upgradeability	Upgradeable to two processors
Chipset	ServerWorks HT2100 and HT1000
Cache Memory	Model Series 24xx 6MB shared L3
Memory Protection	Advanced ECC

Memory One of the following depending on Model	Type	REG PC2-6400 DIMMs (DDR2-800) REG PC2-5300 DIMMs (DDR2-667)
	Standard	4 GB (2 x 2 GB)
	Maximum	64 GB (8 x 8 GB)

Network Controller	Embedded NC7782 dual-port gigabit server adapter

Expansion Slots #	Technology	Bus Width**	Connector Width	Bus Number*	Form Factor	Notes
1	PCI Express	x16	x16	3	Full Height/Full Length	
1	HTX	N/A	N/A	9	Full Height/Full Length	
2	PCI Express	x4	x8	6	Low-profile	
2	PCI-X	64-bit, 133MHz	N/A	2	Low-profile	

* Default bus assignment. Inserting cards with PCI bridges may alter the actual bus assignment number.

** Slots are enumerated differently based on OS. MS OS's enumerate from lowest to highest Device ID by bus (starting with the lowest bus).

NOTE: Slot 2 is reserved for a storage controller with the Hot Plug Model chassis.

Standard Features

Storage Controller	Non-Hot Plug SATA	HP Embedded SATA Controller NOTE: Raid support requires optional slot based raid controller.
	Hot Plug SATA/SAS	HP Smart Array P212 RAID Controller NOTE: Transfer rate: up to 3 Gb/s SATA, up to 3 Gb/s SAS.
	NOTE: A diskette drive or virtual FDD using LO100 Advanced Pack is needed to install storage controller drivers during a Windows operating system installation from a CD. NOTE: RAID 6 functionality requires the addition of Smart Array Advanced Pack (P/N: 516471-B21).	
Storage	Diskette Drives	Via USB only
	Optical Drives	Optional 8x IDE (ATAPI) DVD-ROM drive, slim
		Optional 24x IDE (ATAPI) DVD-ROM/CDRW drive
	Hard Drives	Up to 4 Non-hot plug SATA 3.5" drives
		Up to 4 Hot plug SATA /SAS 3.5" drives

Maximum Internal Storage	Non-Hot Plug SATA	8.0TB	4 x 2TB
	Hot Plug SATA	8.0TB	4 x 2TB
	Hot Plug SAS	8.0TB	4 x 2TB

Interfaces	Parallel	None
	Network RJ-45(Ethernet)	Embedded NC7782 dual-port gigabit server adapter
	Serial	1
	Pointing Device (Mouse)	1
	Graphics	1
	Keyboard	1
	USB	Up to 5 (two front & two rear standard, 1 internal option).

Graphics	32MB shared supporting 1600x1200x16M resolution
Form Factor	Rack (1U), (1.75 in/4.45 cm)

Standard Features

Embedded Manageability	HP LO100i Advanced	HP Lights-Out 100 with Optional LO100i Advanced Licenses for Virtual KVM and Virtual Media. Standard Features: • Embedded IPMI standard reporting • System event log access • Remote Serial console (serial redirection) • Browser, Telnet access • SMASH-CLP compliant • IPMI 2.0 compliant Licensed Features: • Virtual media (Floppy, CD, USB 2.0) • Virtual KVM • Secure Socket Layer (SSL) Encryption • Secure Shell (SSH) Encryption NOTE: Flexible and volume quantity (AKA) license kits are available for the Lights-Out 100i Advanced Pack licenses as well as Electronic License To Use (E-LTU). AKA Tracking licenses require a 100 unit minimum forecast at initial contract signing. For these additional part numbers, please refer to each software products. QuickSpecs at this link for more information: www.hp.com/go/lo100
HP Insight Control management software	HP Insight Control for Linux	HP Insight Control for Linux, as a product option, delivers essential infrastructure management that can help save time and money by making it easy to deploy, monitor, remote control, and optimize your IT infrastructure through a single, simple management console. The Insight Control for Linux installs and license software modules that are integrated into HP System Insight Manager. The HP Insight Control for Linux (IC-Linux) serves environments requiring a Linux-based management consoles. See: www.hp.com/go/ic-linux HP Insight Control include one year of 24 x 7 HP Software Technical Support and Update Service ensuring rapid access to HP support staff and proactive delivery of software updates. For more information about this service, please visit: http://www.hp.com/services/insight.
Industry Standard Compliance	ACPI V2.0 Compliant PCI 2.2 Compliant PXE Support WOL Support Microsoft® Logo certifications IPMI 2.0 Compliant	

Standard Features

Security	Power-on password Setup password SSH and SSL Encryption
UPS and PDU Power Cord Matrix	Please see the UPS and PDU cable matrix's on the HP Power Protection and Management page. Under Power Cords, click on the "HP Power Cord Matrix" link. That link will list cable descriptions, requirements, and specifications for UPS and PDU units. Please see the following link: www.hp.com/products/powercords.
Power Supply	500 Watts, auto-switching, high efficiency, PFC (Power Factor Correcting).
System Fans	6 system fans ship standard; non-hot plug, non-redundant
Operating Systems and Virtualization Software Support for ProLiant Servers	Microsoft Windows Server Microsoft Windows Server 2008 Hyper V Red Hat Enterprise Linux (RHEL) SUSE Linux Enterprise Server (SLES) Solaris 10 for x86/x64 based Systems NOTE: For more information on HP's Certified and Supported ProLiant Servers for OS and Virtualization Software and latest listing of software drivers available for your server, please visit our Support Matrix at: http://www.hp.com/go/supportos and our driver download page http://www.hp.com/support/DL165G6.
Rack Airflow Requirements	Rack 10000 G2 series Cabinets The increasing power of new high-performance processor technology requires increased cooling efficiency for rack-mounted servers. The 10000 G2 Series Racks provide enhanced airflow for maximum cooling, allowing these racks to be fully loaded with servers using the latest processors. CAUTION: If a third-party rack is used, observe the following additional requirements to ensure adequate airflow and to prevent damage to the equipment: Front and rear doors: If your 42U server rack includes closing front and rear doors, you must allow 5,350 sq cm (830 square inches) of hole evenly distributed from top to bottom to permit adequate airflow (equivalent to the required 64 percent open area for ventilation). Side: The clearance between the installed rack component and the side panels of the rack must be a minimum of 7 cm (2.75 inches) CAUTION: Always use blanking panels to fill all remaining empty front panel U-spaces in the rack. This arrangement ensures proper airflow. Using a rack without blanking panels results in improper cooling that can lead to thermal damage.
Rack Support	The DL Fixed Rail System supports installation in racks with square or round mounting holes (including Compaq/HP 7000, 9000, 10000 and HP series), with an adjustment range of 24" - 36".

Standard Features

Telco Rack Support	Installation into Telco 2 post, and 4 post, or threaded holes racks requires a 3rd party option kit. For additional information, please visit: www.hp.com/go/rackandpower
HP Factory Express Capability	HP Factory Express offers configuration, customization, integration and deployment services for HP servers and storage products. Customers can choose how their factory solutions are built, tested, integrated, shipped and deployed. Factory Express offers service packages for simple configuration, racking, installation, complex configuration and design services as well as individual factory services, such as image loading, asset tagging, and custom packaging. HP products supported through Factory Express include a wide array of servers and storage: HP Integrity, HP ProLiant, HP ProLiant Server Blades, HP BladeSystem, HP 9000 servers as well as the MSAxxxx, VA7xxx, EVA, XP, rackable tape libraries and configurable network switches. For more information on Factory Express services for your specific server model please contact your sales representative or go to: http://www.hp.com/go/factory-express.
HPC Interconnects	NOTE: High Performance Computing (HPC) interconnect technologies are available for this server under the Cluster Platform product portfolio. These high-speed interconnects are fully supported by HP when they are part of these configure to order clusters. Solutions can be defined with a lot of flexibility with the help of configuration tools. Please visit the following URL to configure HPC Clusters with InfiniBand, Gigabit Ethernet or Myrinet Interconnects: http://www.hp.com/techservers/clusters/ucp/index.html InfiniBand PCI-Express Generation 2 adapters
HP Enterprise Configurator	The HP eConfigure Enterprise Configurator now provides factory default racking for our HP hardware portfolio. This approach is aligned with our strategic direction to meet the needs and expectations of our valued customers. If you require "custom" rack configuration, please contact HP's Customer Business Center or an Authorized Partner for assistance. http://www.hp.com/products/configurator.
Service and Support	HP Care Pack Services provide total care and support expertise with committed response designed to meet your IT and business needs. HP Care Pack services include coverage for the HP branded hardware options qualified for the server that are purchased at the same time or afterward and internal to the enclosure. It also includes the 22" and smaller external monitors and tower UPS options up to 3kVA. These items will be covered at the same service level and for the same coverage period as the server. Coverage of UPS Battery is not included and standard warranty terms & conditions apply. For servers or storage systems installed within a rack, service also covers all HP qualified rack options installed within the same rack. To fully capitalize on your HP ProLiant servers' capabilities requires a service partner who thoroughly understands your server technology and systems environment. HP Services, an industry leader in provision of multi vender support solutions provides a range of support services designed to meet the varying needs of business. Whether an SMB or large global corporation HP has a ProLiant server support offer to help you speedily deploy and maximize system uptime. Recommended Service - Simplify ProLiant solution implementation, maintenance and management.

- Support Service - 3-Year 24x7 4 hr Response service support coverage
- Deployment Service - Hardware Installation

Enhanced Service - Optimize service level to increase IT performance and availability

- Support Service - 3Year 24x7 24 hr Call to repair service support coverage
- Support Service - 3-Year 24x7 6 hr Call to repair service support coverage
- Support Plus - 24x7 24 hr Call to repair service support including OS coverage Operating

Installation & Start-Up of a ProLiant server and Microsoft or Linux O/S per the Customer Description and/or Data Sheet. To be delivered on a scheduled basis 8am-5pm, M-F, excl. HP holidays.

For a complete listing of service offerings and information visit:
http://www.hp.com/services/proliantservices
http://h20219.www2.hp.com/services/us/en/warranty/carepack-servers-proliant.html

Hot Plug Serial ATA (SATA)/Serial Attached SCSI (SAS) Models

HP DL165G6 2427 2.2 GHz, 4GB, Hot Plug (1P) 538278-xx1	Processor(s) One of the following depending on model	(1) AMD Opteron™ processor Model 2427 (2.2 GHz, 75W ACP) (1) AMD Opteron™ processor Model 2435 (2.6 GHz, 75W ACP)
	Cache Memory	6MB shared Level 3 cache
HP DL165 G6 2435 2.6 GHz, 8 GB Hot Plug SAS/SATA (2P) 538274-xx1	Memory One of the following depending on model	4 GB (2 x 2GB) Registered PC2-6400 DDR2 DIMMs (800MHz) with Advanced ECC capabilities 8GB (4 x 2GB) Registered PC2-6400 DDR2 DIMMs (800MHz) with Advanced ECC capabilities
	Network Controller	Embedded NC7782 dual-port gigabit server adapter
	Storage Controller	HP Smart Array P212 (538278-xx1) HP Smart Array P212/256MB/BBWC (538274-xx1)
	Hard Drive	None Ship Standard (up to 4 Hot Plug SATA or SAS drives supported)
	Internal Storage One of the following depending on model	SATA: 8.0TB Maximum SAS: 8.0TB Maximum
	Optical Drive	None Ship Standard (1 DVD-ROM or DVD/CD RW supported)
	Form Factor	Rack (1U)

Non-Hot Plug Serial ATA (SATA) Models

HP DL165 G6 2423HE NHP SATA, 4GB, 1P 538279-xx1	Processor(s)	(1) AMD Opteron™ processor Model 2423HE (2.0 GHz, 55W ACP)
	Cache Memory	6MB shared Level 3 cache
	Memory	4 GB (2 x 2GB) Registered PC2-6400 DDR2 DIMMs (800MHz) with Advanced ECC capabilities
	Network Controller	Embedded NC7782 dual-port gigabit server adapter
	Storage Controller	HP Embedded SATA Controller
	Hard Drive	(1) 160GB NHP SATA HDD
	Internal Storage	SATA: 6.16TB maximum
	Optical Drive	None Ship Standard (1 DVD-ROM or DVD/CD RW supported)
	Form Factor	1U

Country Code Key	xx = 00	U.S.
	xx = 20	Brazil
	xx = 29	Japan
	xx = 37	APD
	xx = 42	Euro
	xx = AA	PRC

NOTE: This section lists some of the steps required to configure a Factory Integrated Model. To ensure only valid configurations are ordered, HP recommends the use of an HP approved configurator. Contact your local sales representative for information on CTO product offerings and requirements.
NOTE: HP does not allow factory integration of options into standard models listed above. Configure-to-order servers must start with a CTO Chassis.
NOTE: FIO indicates that this option is only available as a Factory Installable Option.

Step 1: Base Configuration

HP Models	Non-Hot Plug SATA Model	
	HP ProLiant DL165 G6 Non-Hot Plug SATA Rack Chassis	572227-B21
	Factory Integrated Model ships with:	
	Embedded NC7782 dual-port gigabit server adapter	
	Two available PCI-Express slots, including one full-length/full height and one low-profile/half height slot	
	HP embedded SATA controller	
	One Highline IEC Power Cord	
	6 Fixed, Non-Redundant Fans	
	Rack (1U), (1.75 in / 4.45 cm) Tool-less Fixed Rails	
	Hot Plug SATA/SAS Model	
	HP ProLiant DL165 G6 Hot Plug SATA/SAS Rack Chassis	572228-B21
	Factory Integrated Model ships with:	
	Embedded NC7782 dual-port gigabit server adapter	
	One full-length/full height PCI-Express slot. Low-profile/half height slot houses the HP Smart Array P212 storage controller	
	One Highline IEC Power Cord	
	6 Fixed, Non-Redundant Fans	
	Rack (1U), (1.75 in / 4.45 cm) Tool-less Fixed Rails	

Step 2: Choose Required Options (only one of the following from each list unless otherwise noted)

HP Processors	NOTE: If 2 processors are desired, select one xxxxxx-L21 and one xxxxxx-B21.	
	AMD Opteron™ processor Model 2435 (2.6 GHz, 75W ACP), Option Kit, FIO	572221-L21
	AMD Opteron™ processor Model 2431 (2.4 GHz, 75W ACP), Option Kit, FIO	572219-L21
	AMD Opteron™ processor Model 2427 (2.2 GHz, 75W ACP), Option Kit, FIO	572142-L21
	AMD Opteron™ processor Model 2425HE (2.1GHz, 55W ACP), Option Kit, FIO	572140-L21
	AMD Opteron™ processor Model 2423HE (2.0GHz, 55W ACP), Option Kit, FIO	572138-L21

HP Memory	HP 2GB (2x1GB) Single Rank PC2-6400 (DDR2-800) Registered Memory Kit	497763-B21
	HP 4GB (2x2GB) Single Rank PC2-6400 (DDR2-800) Registered Memory Kit	497765-B21
	HP 8GB (2x4GB) Dual Rank PC2-6400 (DDR2-800) Registered Memory Kit	497767-B21
	HP 8GB (2x4GB) Dual Rank x4 PC2-6400 (DDR2-800) Registered Low Power Memory Kit	504351-B21
	HP 16GB (2x8GB) Dual Rank PC2-5300 (DDR2-667) Registered Memory Kit	408855-B21
	HP 64GB (8x8GB) Dual Rank PC2-5300 (DDR2-667) Registered Memory Kit	495605-B21
HP Hard Drives	NOTE: The components of a storage subsystem (e.g. the drive, the HBA/controller, and the server backplane) should operate at the same data transfer rate or the system bandwidth will be negotiated down to an acceptable level for all components. NOTE: Required only if P/N 572227-B21 selected in Step 1. NOTE: Hard drives have either a one year or three year warranty; refer to the specific hard drive QuickSpecs for details.	
	Serial-ATA (SATA) Non-Hot Plug Hard Drives (Non-Hot Plug Models Only)	
	SATA Non-Hot Plug LFF (3.5-inch) Entry (ETY) Drives	
	HP 250GB 3G SATA 7.2K rpm LFF (3.5-inch) Non-hot Plug Entry 1yr Warranty Hard Drive	571232-B21
	HP 160GB 3G SATA 7.2K rpm LFF (3.5-inch) Non-hot Plug Entry 1yr Warranty Hard Drive	458947-B21
	SATA Non-Hot Plug LFF (3.5-inch) Midline (MDL) Drives	
	HP 2TB 3G SATA 7.2K rpm LFF (3.5-inch) Non-hot Plug Midline 1yr Warranty Hard Drive	507774-B21
	HP 1TB 3G SATA 7.2K rpm LFF (3.5-inch) Non-hot Plug Midline 1yr Warranty Hard Drive	507772-B21
	HP 500GB 3G SATA 7.2K rpm LFF (3.5-inch) Non-hot Plug Midline 1yr Warranty Hard Drive	458941-B21
	HP 250GB 3G SATA 7.2K rpm LFF (3.5-inch) Non-hot Plug Midline 1yr Warranty Hard Drive	458939-B21
HP Storage Controllers	NOTE: A minimum of one Smart Array Controller is required when purchasing Hot Plug CTO Chassis Model (P/N 572228-B21). NOTE: In order to upgrade to RAID 6, at least 256MB Cache and a Battery is required in addition to the Smart Array Advanced Pack license (516471-B21).	
	HP P212/256MB FIO Smart Array BBWC	491191-B21
	HP P212/256MB Smart Array Controller	462834-B21
	HP P212/Zero Memory Smart Array Controller	462828-B21
	HP P410/Zero Memory FIO Smart Array Controller	462860-B21
	HP P410/256MB Smart Array Controller	462862-B21
	HP Smart Array P410/256MB w/ Battery FIO	491195-B21
	HP P410/512MB BBWC Smart Array Controller	462864-B21

HP Power Supplies	Many HP ProLiant Servers now offer new power options, including Common Slot Power Supplies. These power supplies come in multiple power ratings and higher efficiency levels to offer the Right Size solution to fit your configuration. This provides improved power delivery and the advantage of reclaiming lost power. Prior to making a power supply selection it is "highly recommended" that the "HP Power Advisor" is run to determine the right size power supply for your server configuration. The HP Power Advisor is located at: www.hp.com/go/hppoweradvisor	
	HP High Efficiency 500W Multi-output Power Supply Kit	536928-B21

Step 3: Choose Additional Options for Factory Integration

NOTE: For additional "Core Options" and "Additional Options", please refer to the "Options" sections below.

Core Options

NOTE: Some options may not be available for factory integration. Please contact an HP sales representative for additional information.

HP Processors	AMD Opteron™ processor Model 2435 (2.6 GHz,75W ACP)	572221-B21
	AMD Opteron™ processor Model 2431 (2.4 GHz, 75W ACP)	572219-B21
	AMD Opteron™ processor Model 2427 (2.2 GHz,75W ACP)	572142-B21
	AMD Opteron™ processor Model 2425HE (2.1GHz, 55W ACP)	572140-B21
	AMD Opteron™ processor Model 2423HE (2.0GHz, 55W ACP)	572138-B21
HP Memory	HP 2GB (2x1GB) Single Rank PC2-6400 (DDR2-800) Registered Memory Kit	497763-B21
	HP 4GB (2x2GB) Single Rank PC2-6400 (DDR2-800) Registered Memory Kit	497765-B21
	HP 8GB (2x4GB) Dual Rank PC2-6400 (DDR2-800) Registered Memory Kit	497767-B21
	HP 8GB (2x4GB) Dual Rank x4 PC2-6400 (DDR2-800) Registered Low Power Memory Kit	504351-B21
	HP 16GB (2x8GB) Dual Rank PC2-5300 (DDR2-667) Registered Memory Kit	408855-B21
	HP 64GB (8x8GB) Dual Rank PC2-5300 (DDR2-667) Registered Memory Kit	495605-B21
HP Optical Drives	DVD-ROM Drive	447889-B21
	DVD/CD RW Drive	447891-B21
HP Hard Drives	NOTE: The components of a storage subsystem (e.g. the drive, the HBA/controller, and the server backplane) should operate at the same data transfer rate or the system bandwidth will be negotiated down to an acceptable level for all components. NOTE: Hard drives have either a one year or three year warranty; refer to the specific hard drive QuickSpecs for details.	
	SATA Hot Plug LFF (3.5-inch) Midline (MDL) Drives	
	HP 2TB 3G SATA 7.2K rpm LFF (3.5-inch) Midline 1yr Warranty Hard Drive	507632-B21
	HP 1TB 3G SATA 7.2K rpm LFF (3.5-inch) Midline 1yr Warranty Hard Drive	454146-B21
	HP 500GB 3G SATA 7.2K rpm LFF (3.5-inch) Midline 1yr Warranty Hard Drive	458928-B21
	SATA Non-Hot Plug LFF (3.5-inch) Midline (MDL) Drives	
	HP 2TB 3G SATA 7.2K rpm LFF (3.5-inch) Non-hot Plug Midline 1yr Warranty Hard Drive	507774-B21
	HP 1TB 3G SATA 7.2K rpm LFF (3.5-inch) Non-hot Plug Midline 1yr Warranty Hard Drive	507772-B21
	HP 500GB 3G SATA 7.2K rpm LFF (3.5-inch) Non-hot Plug Midline 1yr Warranty Hard Drive	458941-B21
	HP 250GB 3G SATA 7.2K rpm LFF (3.5-inch) Non-hot Plug Midline 1yr Warranty Hard Drive	458939-B21
	SATA Hot Plug LFF (3.5-inch) Entry (ETY) Drives	
	HP 250GB 3G SATA 7.2K rpm LFF (3.5-inch) Entry 1yr Warranty Hard Drive	571230-B21
	HP 160GB 3G SATA 7.2K rpm LFF (3.5-inch) Entry 1yr Warranty Hard Drive	458945-B21
	SATA Non-Hot Plug LFF (3.5-inch) Entry (ETY) Drives	

Core Options

HP 250GB 3G SATA 7.2K rpm LFF (3.5-inch) Non-hot Plug Entry 1yr Warranty Hard Drive	571232-B21
HP 160GB 3G SATA 7.2K rpm LFF (3.5-inch) Non-hot Plug Entry 1yr Warranty Hard Drive	458947-B21
NOTE: Please see the QuickSpecs for Technical Specifications and additional information: http://h18000.www1.hp.com/products/quickspecs/13021_div/13021_div.html (Worldwide)	
SATA Hot Plug 3.5" Midline (MDL) Solid State Drives	
HP 120GB 3G SATA LFF (3.5-inch) Midline 1yr Warranty Solid State Drive	570763-B21
HP 60GB 3G SATA LFF (3.5-inch) Midline 1yr Warranty Solid State Drive	570761-B21
NOTE: Please see the QuickSpecs for Technical Specifications and additional information: http://h18000.www1.hp.com/products/quickspecs/13415_div/13415_div.html (Worldwide)	
SAS Hot Plug LFF (3.5-inch) Enterprise (ENT) Drives	
HP 600GB 6G SAS 15K rpm LFF (3.5-inch) Dual Port Enterprise 3yr Warranty Hard Drive	516828-B21
HP 450GB 6G SAS 15K rpm LFF (3.5-inch) Dual Port Enterprise 3yr Warranty Hard Drive	516816-B21
HP 450GB 3G SAS 15K LFF (3.5-inch) Dual Port Enterprise 3yr Warranty Hard Drive	454232-B21
HP 300GB 6G SAS 15K rpm LFF (3.5-inch) Dual Port Enterprise 3yr Warranty Hard Drive	516814-B21
HP 300GB 3G SAS 15K LFF (3.5-inch) Dual Port Enterprise 3yr Warranty Hard Drive	416127-B21
HP 146GB 3G SAS 15K LFF (3.5-inch) Dual Port Enterprise 3yr Warranty Hard Drive	384854-B21
SAS Hot Plug LFF (3.5-inch) Midline (MDL) Drives	
HP 2TB 6G SAS 7.2K rpm LFF (3.5-inch) Dual Port Midline 1yr Warranty Hard Drive	507616-B21
HP 1TB 6G SAS 7.2K rpm LFF (3.5-inch) Dual Port Midline 1yr Warranty Hard Drive	507614-B21
HP 1TB 3G SAS 7.2K rpm LFF(3.5-inch) Dual Port Midline 1yr Warranty Hard Drive	461137-B21
HP 750GB 3G SAS 7.2K rpm LFF(3.5-inch) Dual Port Midline 1yr Warranty Hard Drive	461135-B21
NOTE: The purchase of SAS HBA or array controller is required.	
NOTE: Please see the QuickSpecs for Technical Specifications and additional information: http://h18000.www1.hp.com/products/quickspecs/12244_div/12244_div.html (Worldwide)	

Core Options

HP Networking	Gigabit Ethernet Adapters	
	HP NC112T PCIe Gigabit Server Adapter	503746-B21
	HP NC360T PCI Express Dual Port Gigabit Server Adapter	412648-B21
	HP NC375T PCI Express Quad Port Gigabit Server Adapter	538696-B21
	HP NC364T PCI Express Quad Port Gigabit Server Adapter	435508-B21
	HP NC373F PCI Express Multifunction Gigabit Server Adapter	394793-B21
	HP NC373T PCI Express Multifunction Gigabit Server Adapter	394791-B21
	HP NC382T PCI Express Dual Port Multifunction Gigabit Server Adapter	458492-B21
	10 Gigabit Ethernet Adapters NOTE: No more than two10GbE I/O devices are supported in a single ProLiant server. NOTE: A minimum of two Gigabytes (2 GB) of server memory is required per each adapter. NOTE: Direct Attach Cable (DAC) for copper environments or fiber transceivers and cables for fiber-optic environments must be purchased separately.	
	HP NC522SFP Dual Port 10GbE Server Adapter	468332-B21
	NOTE: Please see the QuickSpecs for Technical Specifications and additional information: www.hp.com/go/ProLiantNICs	
HP I/O Expansion Options	HP HTX Riser Board Kit	445987-B21
	HP PCI-X L/P Riser Kit NOTE: Replaces the standard Half Height (LP) PCI Express slot with a Half Height (LowProfile) PCI-X slot.	452698-B21

Additional Options

HP Entry-Level Server Management	HP LO100i Advanced Pack, No Media 1-Server License including 1 year of 24x7 Technical Support and Updates NOTE: For additional License Kits please see the Lights-Out 100i QuickSpecs at: www.hp.com/go/lo100.	530521-B21
HP Insight Software	HP Insight Control for Linux	
	HP Insight Control for Linux, 1-server license, including one year of 24x7 Technical Support and Updates, Electronic	TC213AAE
	HP Insight Control for Linux, No Media, 1-Server license, including one year of 24x7 Technical Support and Updates	TC209A
	HP Insight Control for Linux, Media pack (DVD) - No licenses included	TC208A
	NOTE: Licenses ship without media. The Media Kit for Insight Control for Linux can be ordered separately, or can be downloaded at: http://www.hp.com/go/ic-linux (click on Download button). NOTE: Electronic licenses can be used to purchase multiple licenses with a single activation key, and are available in all countries except China and Japan. Customers in China and Japan should order the physical equivalent. NOTE: Customer will receive a license entitlement certificate, which must be redeemed online or via fax in order to obtain the license activation key(s). Includes one year of 24 x 7 HP Software Technical Support Service. NOTE: For additional License Kits, including electronic licensing options, please see the QuickSpecs at: http://h18000.www1.hp.com/products/quickspecs/13019_div/13019_div.html	
	HP Insight Control server deployment	
	HP Insight Control server deployment Electronic License including 1 year 24x7 Technical Support and Updates	T9082AAE
	HP Insight Control server deployment 1-Server License including 1 year 24x7 Technical Support and Updates	452151-B21
	NOTE: Licenses ship without media. The Insight Control Media Kit can be ordered separately, or can be downloaded at: http://www.hp.com/go/insightupdates. NOTE: Electronic licenses can be used to purchase multiple licenses with a single activation key, and is available in all countries except China and Japan. Customers in China and Japan should order the physical equivalent. NOTE: Customer will receive a license entitlement certificate, which must be redeemed online or via fax in order to obtain the license activation key(s). Includes one year of 24 x 7 HP Software Technical Support Service. NOTE: For additional license kits please see the Insight Control QuickSpecs at: http://h18004.www1.hp.com/products/quickspecs/12631_div/12631_div.html	
HP Graphic Options	HP Graphic Card Power Adapter Kit	533955-B21
HP Drive Cage Options	Hot Plug HDD Backplane 1U 2S Kit NOTE: Installation of the Hot Plug Backplane 1U 2S Kit (445985-B21) is required if ordering third or fourth Hard Drives for Hot Plug models only.	445985-B21

Additional Options

HP Storage Controllers	NOTE: The addition of storage controllers for internal hard drive use is intended for use ONLY with the Hot Plug SATA/SAS Model Chassis (572228-B21).	
	SAS Controllers	
	Smart Array P212 Controller	
	HP Smart Array P212/Zero Memory Controller	462828-B21
	HP Smart Array P212/256MB Controller	462834-B21
	Smart Array P410 Controller	
	HP Smart Array P410/256MB Controller	462862-B21
	HP Smart Array P410/512MB with BBWC Controller	462864-B21
	HP Smart Array P410/512MB with FBWC	578230-B21
	HP Smart Array P410/1G with FBWC	572532-B21
	Smart Array P411 Controller NOTE: Controllers for use with external storage only.	
	HP Smart Array P411/256MB Controller	462830-B21
	HP Smart Array P411/512MB BBWC	462832-B21
	HP Smart Array P411/512MB Flash Backed Write Cache	578229-B21
	HP Smart Array P411/1G Flash Backed Write Cache	572531-B21
	NOTE: Please see the following QuickSpecs for Technical Specifications and additional information: http://h18000.www1.hp.com/products/quickspecs/13203_div/13203_div.html (Smart Array P212 Controller) http://h18000.www1.hp.com/products/quickspecs/13201_div/13201_div.html (Smart Array P410 Controller) http://h18000.www1.hp.com/products/quickspecs/13202_div/13202_div.html (Smart Array P411 Controller)	
	Optional upgrades	
	1G Flash Backed Write Cache	534562-B21
	512MB Flash Backed Write Cache	534916-B21
	HP Smart Array Advanced Pack No Media 1-Server license including 1yr 24x7 Technical Support	516471-B21
	NOTE: This part number can be used to purchase a single license or to order multiple licenses with a single activation key. Customers will receive a license entitlement certificate via e-mail. The license entitlement certificate must be redeemed online or via fax in order to obtain the license activation key(s). Include one year of 24x7 HP Software Technical Support Services.	
	SAS HBA	
	HP SC08Ge Host Bus Adapter	488765-B21
	HP SC08e 6Gb 2-ports Ext PCIe SAS HBA NOTE: This is a 2 x4 External Port HBA.	614988-B21
	NOTE: Please see the QuickSpecs for Technical Specifications and additional information: http://h18004.www1.hp.com/products/quickspecs/13082_div/13082_div.html (SC08Ge HBA)	

Additional Options

HP InfiniBand Options	HP IB 4X DDR PCI-e Dual Port HCA	448397-B21
	HP IB 4X DDR PCI-e Dual Port 0 Memory HCA	483513-B21
	HP 10 GbE PCI-e G2 Dual Port Adapter	516937-B21
	NOTE: Please see the QuickSpecs for additional information: http://h18000.www1.hp.com/products/quickspecs/13078_div/13078_div.html	
HP Backup & Recovery Software	**Data Protector Express**	
	HP Data Protector Express 4.0 SP1 Backup Server	BB117BA
	HP Data Protector Express 4.0 SP1 for Microsoft Small Business Server	BB118BA
	HP Data Protector Express Backup Server 4.0 SP1 Upgrade from Data Protector Express Single Server Edition	BB117BT
	NOTE: Only one of these Data Protector Express base products is required. To see available options: http://www.hp.com/go/dataprotectorexpress	
HP Tape Backup	NOTE: For the complete range of StorageWorks tape drives, autoloaders, libraries and media see: http://www.hp.com/go/tape. For hardware and software compatibility of HP StorageWorks tape backup products see: http://www.hp.com/go/connect.	
	HP StorageWorks DAT 320 USB Internal Tape Drive	AJ825A
	HP StorageWorks DAT 320 SAS Internal Tape Drive NOTE: Connection using HP P212 Smart Array Controller SAS (462828-B21) recommended.	AJ830A
	HP StorageWorks LTO-2 Ultrium 448 SAS Internal Tape Drive NOTE: Connection using HP P212 Smart Array Controller SAS (462828-B21) recommended.	DW085A
	HP StorageWorks LTO-3 Ultrium 920 SAS Internal Tape Drive NOTE: Connection using HP P212 Smart Array Controller SAS (462828-B21) recommended.	EH847A
	HP StorageWorks 1/8 G2 LTO-3 Ultrium 920 SAS Tape Autoloader NOTE: Requires HP 1U Tape Autoloader Rack-Mount Kit (AH166A) for rack installation. Connection using HP P212 Smart Array Controller SAS (462828-B21) recommended.	AH558A
	HP StorageWorks MSL2024 Tape Library with one LTO-3 Ultrium 920 SAS Drive NOTE: Connection using HP P212 Smart Array Controller SAS (462828-B21) recommended.	AH559A
	HP StorageWorks MSL2024 Tape Library with one LTO-5 Ultrium 3000 SAS Drive NOTE: Connection using HP P212 Smart Array Controller SAS (462828-B21) recommended.	BL537A

Additional Options

Disk Backup	NOTE: For the complete range of StorageWorks D2D Backup Systems see: http://www.hp.com/go/d2d. For the complete range of StorageWorks RDX drives and media see: http://www.hp.com/go/rdx. For hardware and software compatibility of HP StorageWorks disk backup products see: http://www.hp.com/go/connect.	
	HP StorageWorks D2D Backup Systems with Backup Data Deduplication	
	NOTE: These are network connected appliances with connectivity using the iSCSI protocol. If the server requires a hardware iSCSI initiator, the QLogic QLA4050 Host Bus Adapter is recommended.	
	HP StorageWorks D2D2502i Backup System NOTE: 1.5TB of usable network disk backup capacity. Network connected appliance with connectivity using the iSCSI protocol. If the server requires a hardware iSCSI initiator, the QLogic QLA4050 Host Bus Adapter is recommended.	EJ001B
	HP StorageWorks D2D2504i Backup System NOTE: 3.0TB of usable network disk backup capacity. Network connected appliance with connectivity using the iSCSI protocol. If the server requires a hardware iSCSI initiator, the QLogic QLA4050 Host Bus Adapter is recommended.	EJ002B
	USB Removable Media RDX Disk Backup Systems	
	HP StorageWorks RDX320 Internal Removable Disk Backup System NOTE: 320GB of disk capacity per data cartridge.	AJ767A
	HP StorageWorks RDX500 Internal Removable Disk Backup System NOTE: 500GB of disk capacity per data cartridge.	AJ934A
	HP StorageWorks RDX750 Internal Removable Disk Backup System NOTE: 750GB of disk capacity per data cartridge.	AW577A
HP StorageWorks Options	StorageWorks Fibre Channel HBA	
	NOTE: The following is a list of all Fibre Channel Host Bus Adapters for Windows and Linux. For detailed compatibility information please see: http://h18006.www1.hp.com/storage/saninfrastructure/hba.html	
	Brocade Fibre Channel HBAs	
	HP 81B PCIe 8Gb FC Single Port HBA	AP769A
	HP 82B PCIe 8Gb FC Dual Port HBA	AP770A
	HP 41B PCIe 4Gb FC Single Port HBA	AP767A
	HP 42B PCIe 4Gb FC Dual Port HBA	AP768A
	Emulex Fibre Channel HBAs	
	HP StorageWorks 81E 8Gb SP PCI-e FC HBA	AJ762A
	HP StorageWorks 82E 8Gb Dual-port PCI-e FC HBA	AJ763A
	QLogic Fibre Channel HBAs	
	HP StorageWorks 81Q 8Gb PCI-e FC HBA	AK344A
	HP StorageWorks 82Q 8Gb Dual Port PCI-e FC HBA	AJ764A
	StorageWorks SCSI HBA	
	HP U320e SCSI Host Bus Adapter NOTE: Recommended for MSL SCSI Tape Library connect.	AH627A
	NOTE: Recommended Dual Channel Ultra320 SCSI Controller for connecting multi-drive MSL tape libraries to ProLiant servers.	

	StorageWorks Converged Network Adapter	
	HP CN1000E 2P Converged Network Adapter	AW520A
HP Disk Storage Systems	MSA SAN Storage Arrays	
	HP StorageWorks 50 Modular Smart Array	364430-291
	NOTE: Please see the QuickSpecs for additional options and configuration information at: http://h18000.www1.hp.com/products/quickspecs/12245_div/12245_div.html (Worldwide)	
	HP StorageWorks MSA60 Array	418408-B21
	NOTE: Please see the QuickSpecs for additional options and configuration information at: http://h18000.www1.hp.com/products/quickspecs/12627_div/12627_div.html	
	HP StorageWorks MSA70 Array	418800-B21
	NOTE: Please see the QuickSpecs for additional options and configuration information at: http://h18000.www1.hp.com/products/quickspecs/12652_div/12652_div.html	
HP Uninterruptible Power Systems	HP Rack-mountable UPS	
	HP R1500 G2 UPS	
	HP, R1.5kVA UPS, 1U, NA	AF419A
	HP, R1.5kVA UPS, 1U, INTL	AF418A
	HP, R1.5kVA UPS, 1U, JPN/TW	AF421A
	NOTE: Please see QuickSpecs for Technical Specifications and additional information: http://h18000.www1.hp.com/products/quickspecs/12507_div/12507_div.html (Worldwide)	
	HP R/T3000 Uninterruptible Power System (UPS)	
	HP R/T3000 UPS, High voltage, NA/JPN	AF453A
	HP R/T3000 UPS, High voltage, detachable inlet cord INTL	AF454A
	NOTE: Please see the QuickSpecs for additional information: http://h18000.www1.hp.com/products/quickspecs/13417_div/13417_div.html (Worldwide)	
	HP Rack-Mountable R5500 UPS	
	HP R5500 VA UPS, INTL	AF416A
	HP R5500 VA UPS, NA/JPN	AF426A
	NOTE: Please see the QuickSpecs for additional information: http://h18000.www1.hp.com/products/quickspecs/11871_div/11871_div.html (Worldwide)	
	NOTE: For additional information on HP Uninterruptable Power Systems please go to: www.hp.com/servers/rackups.	
	NOTE: For additional information on sizing your server, please reference: http://www.upssizer.com	

Additional Options

HP Power Distribution Units	Monitored PDUs	
	HP Monitored Power Distribution Unit: Full Rack Version	
	HP 8.6 kVA S1324 Monitored PDU- single input, 3Ø, 24A (NA/JPN)	AF504A
	HP 8.3 S1140 Monitored PDU- single input, 1Ø, 40A (NA/JPN)	AF506A
	HP 11 kVA S1316 Monitored PDU- single input, 3Ø, 16A (INTL)	AF508A
	HP 7.3 kVA S1132 Monitored PDU- single input, 1Ø, 32A (INTL)	AF510A
	HP Monitored Power Distribution Unit: Half Rack Version	
	HP 4.9 kVA S124 Monitored PDU- single input, 1Ø, 24A (NA/JPN)	AF914A
	HP 7.3 kVA S132 Monitored PDU- single input, 1Ø, 32A (INTL)	AF915A
	Modular Power Distribution Units 1U/0U (Up to 32 outlets)	
	4.9 kVA Modular PDU, 24A	252663-D72
	7.3kVA Model - mPDU, 32A, High (INT'L)	252663-B31
	8.3 kVA Modular PDU, 40A, NA/JPN	252663-D73
HP Rack Series (Carbon/Graphite Metallic)	HP Rack 10000 G2 Series (Graphite Metallic)	
	10642 G2 (42U) Rack Cabinet - Pallet	AF001A
	10642 G2 (42U) Rack Cabinet - Shock Pallet	AF002A
	NOTE: It is mandatory to use a shock pallet when shipping racks with equipment installed.	
	NOTE: xxxxxx-B22 (shock pallet) used to ship racks with equipment installed (by custom systems, VARs and Channels).	
	NOTE: Please see the QuickSpecs for Technical Specifications and additional information: http://h18000.www1.hp.com/products/quickspecs/12402_div/12402_div.html (Worldwide)	
	NOTE: For additional information regarding Rack Cabinets, please see the following URL: http://www.hp.com/go/rackandpower.	
HP Rack Options	HP KVM Switch Options	
	Server console switch 0x2x8	AF616A
	Server console switch 0x2x16	AF617A
	0x2x16 KVM Server Console G2 Switch with Virtual Media and CAC	AF618A
	0x2x32 KVM Server Console G2 Switch with Virtual Media and CAC	AF619A
	1x1Ex8 KVM IP Console Switch G2 with Virtual Media and CAC	AF620A
	2x1Ex16 KVM IP Console Switch G2 with Virtual Media and CAC	AF621A
	4x1Ex32 KVM IP Console Switch G2 with Virtual Media and CAC	AF622A
	NOTE: For additional information regarding KVM switches, Serial Console servers, rack mount monitors, keyboards and all related options please see the following URL: http://www.hp.com/go/kvm.	

Additional Options

HP USB and SD Options	HP USB Internal Cable Kit	451363-B21
	USB P/S2 Optical Mouse	DC369A
	HP USB 04 Standard Keyboard	DT528A#ABA
HP Care Pack Services	Hardware Services 4-Hour On-site Service	
	13-Hour x 5-Day Coverage, 3 Years, Electronic	U9509E
	24-Hour x 7-Day Coverage, 3 Years, Electronic	U9510E
	Hardware Services Next Business Day On-Site Service	
	9-Hour x 5-Day Coverage, 3 Years, Electronic	U9508E
	Hardware Services 6-Hour Call to Repair On-Site Service	
	6-Hour Call to Repair, On-site Service, 7-Day x 24-Hour Coverage, 3 Years, Electronic	U9511E
	Hardware Installation, Electronic	U9520E
	NOTE: For more information, customer/resellers can contact: http://www.hp.com/services/carepack	

Memory

NOTE: Memory configurations listed do not apply to "Factory Integrated Models".

HP ProLiant DL165 G6 (all models)

Standard Memory

4 GB (2 x 2 GB) PC2-6400 DIMM memory, with Advanced ECC Capabilities memory installed.

Maximum Memory

Up to 64GB memory is available with the optional installation of PC2-5300 Registered DIMM memory kits.
Memory should be installed in pairs and matched for optimum performance.

NOTE: Chart does not represent all possible memory configurations.

NOTE: Each processor support 4 DIMM sockets. Both processors sockets must be populated in order to use all 8 DIMM sockets.

Memory	Slot							
	1	2	3	4	5	6	7	8
Standard (4 GB)	2 GB	2 GB	Empty	Empty	Empty	Empty	Empty	Empty
Maximum (64 GB)	8 GB	8 GB	8 GB	8 GB	8 GB	8 GB	8 GB	8 GB

HP Memory

Following are memory options available from HP:

HP 2GB (2x1GB) Single Rank PC2-6400 (DDR2-800) Registered Memory Kit	497763-B21
HP 4GB (2x2GB) Single Rank PC2-6400 (DDR2-800) Registered Memory Kit	497765-B21
HP 8GB (2x4GB) Dual Rank PC2-6400 (DDR2-800) Registered Memory Kit	497767-B21
HP 8GB (2x4GB) Dual Rank x4 PC2-6400 (DDR2-800) Registered Low Power Memory Kit	504351-B21
HP 16GB (2x8GB) Dual Rank PC2-5300 (DDR2-667) Registered Memory Kit	408855-B21
HP 64GB (8x8GB) Dual Rank PC2-5300 (DDR2-667) Registered Memory Kit	495605-B21



1-4 Non-hot plug 3.5" SATA or Hot-plug SAS/SATA hard drive bays

A Optional DVD-ROM, or DVD/CD RW

Drive Support

Removable Media

	Quantity Supported	Position Supported	Controller
DVD-ROM	Up to 1	A	Integrated IDE (ATAPI) (optional)
DVD/CD RW	Up to 1	A	Integrated IDE (ATAPI) (optional)

Hard Drives

NOTE: The components of a storage subsystem (e.g. the drive, the HBA/controller, and the server backplane) should operate at the same data transfer rate or the system bandwidth will be negotiated down to an acceptable level for all components.

NOTE: Hard drives have either a one year or three year warranty; refer to the specific hard drive QuickSpecs for details.

SATA Non-Hot Plug LFF (3.5-inch) Entry (ETY) Drives

	Quantity Supported	Position Supported	Controller
250GB 3G SATA 7.2K 160GB 3G SATA 7.2K	Up to 4	1-4	HP Embedded SATA Controller

SATA Non-Hot Plug LFF (3.5-inch) Midline (MDL) Drives

	Quantity Supported	Position Supported	Controller
2TB 3G SATA 7.2K 1TB 3G SATA 7.2K 500GB 3G SATA 7.2K 250GB 3G SATA 7.2K	Up to 4	1-4	HP Embedded SATA Controller

SATA Hot Plug LFF (3.5-inch) Entry (ETY) Drives

NOTE: Installation of the Hot Plug Backplane 1U 2S Kit (445985-B21) is required if ordering third or fourth Hard Drives for Hot Plug models only.

	Quantity Supported	Position Supported	Controller
250GB 3G SATA 7.2K 160GB 3G SATA 7.2K	Up to 4	1-4	HP Smart Array P212/Zero Memory Controller HP Smart Array P212/256 MB Controller HP Smart Array P410/256 MB Controller HP Smart Array P410/512 MB BBWC Controller

SATA Hot Plug LFF (3.5-inch) Midline (MDL) Drives

	Quantity Supported	Position Supported	Controller

Storage

2TB 3G SATA 7.2K 1TB 3G SATA 7.2K 500GB 3G SATA 7.2K	Up to 4	1-4	HP Smart Array P212/Zero Memory Controller HP Smart Array P212/256 MB Controller HP Smart Array P410/256 MB Controller HP Smart Array P410/512 MB BBWC Controller

SATA Hot Plug 3.5" Midline (MDL) Solid State Drives

	Quantity Supported	Position Supported	Controller
120GB 3G SATA 60GB 3G SATA	Up to 4	1-4	HP SC40Ge 4-Port Internal SAS HBA with RAID 0, 1 NOTE: When using the SC40Ge with SATA Hard Drives, 1.5G SATA Hard Drives are required. Transfer rate: 1.5 Gb/s SATA, 3 Gb/s SAS HP Smart Array P400 Controller HP Smart Array P800 Controller

SAS Hot Plug LFF (3.5-inch) Enterprise (ENT) Drives

	Quantity Supported	Position Supported	Controller
600GB 6G SAS 15K 450GB 6G SAS 15K 450GB 3G SAS 15K 300GB 6G SAS 15K 146GB 3G SAS 15K	Up to 4	1-4	HP Smart Array P212/Zero Memory Controller HP Smart Array P212/256 MB Controller HP Smart Array P410/256 MB Controller HP Smart Array P410/512 MB BBWC Controller

SAS Hot Plug LFF (3.5-inch) Midline (MDL) Drives

	Quantity Supported	Position Supported	Controller
2TB 6G SAS 7.2K 1TB 6G SAS 7.2K 1 TB 3G SAS 7.2K 750GB 3G SAS 7.2K	Up to 4	1-4	HP Smart Array P212/Zero Memory Controller HP Smart Array P212/256 MB Controller HP Smart Array P410/256 MB Controller HP Smart Array P410/512 MB BBWC Controller

External Storage

	Quantity Supported	Position Supported	Controller
50 Modular Smart Array	Up to 4	External	HP Smart Array E500/256 MB Controller HP Smart Array P800/512 BBWC Controller
60 Modular Smart Array	Up to 4	External	HP Smart Array E500/256MB Controller HP Smart Array P212/Zero Memory Controller HP Smart Array P212/256 MB Controller
	Up to 8	External	HP Smart Array P800/512 BBWC Controller HP Smart Array P411/256 MB Controller HP Smart Array P411/512 MB BBWC Controller
70 Modular Smart Array	Up to 2	External	HP Smart Array P212/Zero Memory Controller HP Smart Array P212/ 256 MB Controller
	Up to 4	External	HP Smart Array E500/256MB Controller HP Smart Array P800/512 BBWC Controller HP Smart Array P411/256 MB Controller HP Smart Array P411/512 MB BBWC Controller

Tape and Disk-Based Backup

NOTE: For the complete range of StorageWorks tape drives, autoloaders, libraries and media, including the internal fitting models, see: http://www.hp.com/go/tape. For the complete range of StorageWorks D2D Backup Systems see: http://www.hp.com/go/d2d. For the complete range of StorageWorks RDX drives and media see: http://www.hp.com/go/rdx. For hardware and software compatibility of HP StorageWorks disk and tape backup products see: http://www.hp.com/go/connect.

	Position	Recommended Controller	Part Number
HP StorageWorks SCSI Tape Drives LTO-1 Ultrium 232 LTO-2 Ultrium 448 LTO-3 Ultrium 920 LTO-3 Ultrium 960 LTO4 Ultrium 1760 LTO-4 Ultrium 1840 DAT 40 DAT 72 DAT 160 1U Rack-Mount Kit 3U Rack-Mount Kit	External	HP SC11Xe Host Bus Adapter Please check the full compatibility information at: http://www.hp.com/go/connect	412911-B21
HP StorageWorks SCSI Rack Mount Kits 1U Rack-Mount Kit 3U Rack-Mount Kit	External	HP SC11Xe Host Bus Adapter Please check the full compatibility information at: http://www.hp.com/go/connect	412911-B21
HP StorageWorks USB Tape Drives DAT 40 DAT 72 DAT 160 DAT 320	Internal or External	USB 2.0 Port	N/A
HP StorageWorks USB Rack Mount Kits 1U USB Rack-Mount Kit	External	USB 2.0 Port	N/A
HP StorageWorks SAS Tape Drives DAT 160 DAT 320 LTO-2 Ultrium 448 LTO-3 Ultrium 920 LTO-4 Ultrium 1760 LTO-4 Ultrium 1840 LTO-5 Ultrium 3000 LTO-5 Ultrium 3280	Internal or External	HP Smart Array P212 SAS controller Please check the full compatibility information at: http://www.hp.com/go/connect	462828-B21

HP StorageWorks SAS Rack Mount Kits 1U Rack-Mount Kit 3U Rack-Mount Kit	External	HP Smart Array P212 SAS controller Please check the full compatibility information at: http://www.hp.com/go/connect	462828-B21
HP StorageWorks SCSI Tape Autoloaders DAT 72x10 Autoloader 1/8 G2 Autoloader	External	HP SC11Xe Host Bus Adapter Please check the full compatibility information at: http://www.hp.com/go/connect	412911-B21
HP StorageWorks SCSI Tape Libraries MSL2024 MSL4048 MSL8096 MSL6000	External	HP U320e SCSI Dual Channel Controller Please check the full compatibility information at: http://www.hp.com/go/connect	AH627A
HP StorageWorks SAS Tape Autoloaders and Libraries 1/8 G2 Autoloader MSL2024 MSL4048 MSL8096	External	HP Smart Array P212 SAS controller Please check the full compatibility information at: http://www.hp.com/go/connect	462828-B21
HP StorageWorks Fibre Channel Tape Libraries MSL2024 MSL4048 MSL8096 MSL6000	External	Please consult the EBS connectivity matrix at: http://www.hp.com/go/ebs for connectivity information and the supported Fibre Channel HBAs shown in this QuickSpecs.	
HP StorageWorks USB RDX Removable Disk Backup System RDX160 RDX320 RDX500 RDX750	Internal or External	USB 2.0 port	N/A
HP StorageWorks D2D Backup Systems, iSCSI D2D2500i D2D4000i	External	Embedded Network Controller. If the server requires a hardware iSCSI initiator, the QLogic QLA4050 Host Bus Adapter is recommended.	

Storage

HP StorageWorks D2D Backup Systems, Fibre Channel D2D4000fc	External	Direct server attach is not supported, requires connection via SAN fabric. See: http://www.hp.com/go/connect

Power Specifications

HP 500W Power Supply Part Number - AC 500W PSU	515915-B21 Option Kit					
Input Voltage Range (Vrms)	100 to 240					
Frequency Range (Nominal) (Hz)	47/63					
Nominal Input Voltage (Vrms)	100	120	200	220	230	240
Maximum Rated Output Wattage	500	500	500	500	500	500
Nominal Input Current (A rms)	5.74	4.99	2.86	2.58	2.46	2.36
Max Rated Input Wattage Rating (Watts)	568	568	562	556	556	556
Max. Rated VA (Volt-Amp)	574	574	573	567	567	567
Efficiency (%) at Max. Rated Output Wattage	88	88	89	90	90	90
Power Factor	0.99	0.99	0.98	0.98	0.98	0.98
Leakage Current (mA)	0.42	0.50	0.81	0.91	0.95	1.00
Max. Inrush Current (A peak)	30	30	30	30	30	30
Max. Inrush Current duration (mS)	20	20	20	20	20	20
Maximum British Thermal Unit Rating (BTU-Hr)						

NOTE:
To review typical system power ratings use the Active Answers Power Advisor which is available via the online tool located at URL: www.hp.com/go/proliant-energy-efficient or www.hp.com/go/hppoweradvisor

Power

ProLiant DL165 G6 Fully Configured	115V/60Hz	220V/50Hz
Fully Loaded System Input Wattage (W)	568	556
Fully Loaded System Input Current (A rms)	4.99	2.58
Fully Loaded System Thermal (BTU- Hr)	1939.15	1898.18
Fully Loaded System VA (Volt-Amp)	574	567
System Inrush Current with all power supplies loaded (A)	30	30
Power cord requirements	Nema 5-15P to IEC320-C13	IEC320-C13 to IEC320-C14

NOTE: Power shown is for a fully configured system consisting of (2) CPU, (8) double-sided DIMMs, (2) HDDs, (1) CD-ROM, and (2) PCI cards.

Power Cord AF556A

Server Power Cords

One 6' Highline (IEC-IEC) power cord ships standard

NOTE: HP ProLiant DL servers no longer ship standard with NEMA power cords (163719-002) that allow connection to 110V US wall outlets in a home or office. ProLiant DL servers are primarily connected to PDU's in data center racks so they now ship standard with only a PDU power cord (416151-B21). If a user wishes to power a ProLiant DL server using a 110V receptacle (NEMA-15), the NEMA power cord (227099-001) must be ordered separately.

If customers require a local power cord, they can check the power cord matrix for the appropriate cord. Please see the following power cord matrix: http://www.hp.com/go/powercordmatrix.

System Unit	Dimensions (H x W x D) (with bezel)	1.70 x 17.64 x 26.85 in (4.32 x 44.80 x 68.20 cm)		
	Weight (approximate)	Maximum (all hard drives, power supplies, and processors installed)	37.00 lb (16.78 kg)	
		Minimum (one hard drive, power supply, and processor installed)	30.00 lb (13.69 kg)	
	Input Requirements (per 500W power supply)	Rated Line Voltage	100 to 127 VAC 200 to 240 VAC	
		Rated Input Current	4.99A (at 115 VAC), 2.46A (at 230 VAC)	
		Rated Input Frequency	47 to 63 Hz	
		Rated Input Power	574W (at 100 VAC) 573W (at 200 VAC)	
	BTU Rating	Maximum	500W	1700 BTU / hr (at 100 VAC) 1700 BTU/hr (at 200 VAC)
	Power Specifications	To review typical system power ratings use the Power Advisor which is available via the online tool located at URL: www.hp.com/go/hppoweradvisor - Click on the system of interest. Example: DL165 G6 - Follow the instructions of the next screens.		
	Power Supply Output (per power supply)	Rated Steady-State Power	500 Watts (at 100 VAC), 500 Watts (at 200 VAC)	
		Maximum Peak Power	500 Watts (at 100 VAC), 500 Watts (at 200 VAC)	
	Optional High Efficiency Power Supply Specifications			
	Input Requirements (per power supply)	Rated Line Voltage	90-132 VAC, 200-240 VAC	
		Rated Input Current	9.4 A (at 115 VAC), 7.8 A (at 230 VAC)	
		Rated Input Frequency	47 to 63 Hz	
		Rated Input Power	1075 W (at 100 VAC), 1375W (at 200 VAC)	
	BTU Rating	Maximum	3070.93 BTU/hr (at 100 VAC), 4094.57 BTU/hr (at 200 VAC)	

Power Specifications	To review typical system power ratings use the Power Advisor which is available via the online tool located at URL: www.hp.com/go/proliant-energy-efficient - Click on the system of interest. Example: DL165 G6 - Follow the instructions of the next screens.	
Power Supply Output (per power supply)	Rated Steady-State Power	900 W (at 100 VAC), 1200 W (at 200 VAC)
	Maximum Peak Power	900 W (at 100 VAC), 1200 W (at 200 VAC)
System Inlet Temperature	Operating	10° to 35°C (50° to 95°F) at sea level with an altitude derating of 1.0°C per every 305 m (1.8°F per every 1000 ft) above sea level to a maximum of 3050 m (10,000 ft), no direct sustained sunlight. Maximum rate of change is 10°C/hr (18°F/hr). The upper limit may be limited by the type and number of options installed. System performance may be reduced if operating with a fan fault or above 30°C (86°F).
	Non-operating	-30° to 60°C (-22° to 140°F). Maximum rate of change is 20°C/hr (36°F/hr).
Relative Humidity (non-condensing)	Operating	10 to 90% relative humidity (Rh), 28°C (82.4°F) maximum wet bulb temperature, non-condensing.
	Non-operating	5 to 95% relative humidity (Rh), 38.7°C (101.7°F) maximum wet bulb temperature, non-condensing.
Altitude	Operating	3050 m (10,000 ft). This value may be limited by the type and number of options installed. Maximum allowable altitude change rate is 457 m/min (1500 ft/min).
	Non-operating	9144 m (30,000 ft). Maximum allowable altitude change rate is 457 m/min (1500 ft/min).
Acoustic Noise	Listed are the declared A-Weighted sound power levels (LWAd) and declared average bystander position A-Weighted sound pressure levels (LpAm) when the product is operating in a 23°C ambient environment. Noise emissions were measured in accordance with ISO 7779 (ECMA 74) and declared in accordance with ISO 9296 (ECMA 109).	
	Idle	
	LWAd	6.82 B
	LpAm	51.93 dBA
	Operating	
	LWAd	6.84 B
	LpAm	51.93 dBA
Emissions Classification	**FCC Rating**	Class A

	(EMC)	Normative Standards	CISPR 22; EN55022; EN55024; FCC CFR 47, Pt 15; ICES-003; CNS13438; GB9254; K22;K24; EN 61000-3-2; EN 61000-3-3; EN 60950-1; IEC 60950-1
		NOTE: Product conformance to cited product specifications is based on sample (type) testing, evaluation, or assessment. This product or family of products is eligible to bear the appropriate compliance logos and statements.	

HP 160GB 3G SATA 7.2K rpm LFF (3.5-inch) Non-hot Plug Entry 1yr Warranty Hard Drive	458947-B21	Capacity	160,041 MB	
		Height	1.028 in (2.61 cm)	
		Width	4.0 in (10.16 cm)	
		Depth	5.787 in (147.0 mm)	
		Interface	Serial ATA	
		Transfer Rate Synchronous (Maximum)	1.5Gb/s	
		Native Command Queuing	N/A	
		Seek Time (typical reads, including settling)	Single Track	2.0 ms
			Average	<11 ms
			Full-Stroke	23.0 ms
			Rotational Speed	7,200 rpm
		Physical Configuration	Bytes/Sector	512
			Logical Blocks	312,581,808
		Operating Temperature	41° to 131° F (5° to 55° C)	

Embedded SATA Controller	Drives Supported	Up to 4 SATA devices
	Channels	4 1.5Gb SATA
	Storage Capacity	3.0TB internal storage
	Data Transfer Method	32-bit/33-MHz PCI bus-master
	Maximum SATA Channel Transfer Rate	1.5Gb/s per channel
	Maximum Transfer Rate per PCI Bus (peak)	266 MB/s per channel
	Protocols	SATA
		PIO Mode[0-4]
	Cable	SATA
	Internal ATA Connectors	Four SATA connectors
		NOTE: Raid support requires optional slot based raid controller.

Technical Specifications

HP 4 Internal Port SAS HBA with RAID	Drives Supported	Up to 4 SATA/SAS drives	
	Channels	4	
	Storage Capacity	1.8TB SAS, 3.0TB SATA	
	Data Transfer Method	PCI-Express	
	Maximum SAS Channel Transfer Rate	3Gb/s per channel	
	Maximum SAS transfer rate	300Mb/sec per port	
	Protocols Supported	SSP, STP, SMP	
	Internal Connectors	1 SAS	
Embedded NC7782 dual-port gigabit server adapter	Network Interface	10Base-T/ 100Base-TX/ 1000Base-TX	
	Compatibility	IEEE 802.3 10Base-T	
		IEEE 802.3 1000Base-T	
		IEEE 802.3 100Base-TX	
	Data Transfer Method	PCI-X	
	Controller	BCM5704c	
	Network Transfer Rate	10Base-T (Half-Duplex)	10 Mb/s
		10Base-T (Full-Duplex)	20 Mb/s
		100Base-TX (Half-Duplex)	100 Mb/s
		100Base-TX (Full-Duplex)	200 Mb/s
		1000Base-TX (Half and Full-Duplex)	2000 Mb/s
	Connector	RJ-45	
	Cable Support	10Base-T	Categories 3, 4 or 5 UTP; up to 328 ft (100 m)
		10/100/1000Base-TX	Category 5 UTP (2 Pair); up to 328 ft (100 m)
Environment-friendly Products and Approach	End-of-life Management and Recycling	Hewlett-Packard offers end-of-life HP product return, trade-in, and recycling programs in many geographic areas. For trade-in information, please go to: http://www.hp.com/go/green. To recycle your product, please go to: http://www.hp.com/go/green or contact your nearest HP sales office. Products returned to HP will be recycled, recovered or disposed of in a responsible manner. The EU WEEE directive (2002/95/EC) requires manufacturers to provide treatment information for each product type for use by treatment facilities. This information (product disassembly instructions) is posted on the Hewlett Packard web site at: http://www.hp.com/go/green. These instructions may be used by recyclers and other WEEE treatment facilities as well as HP OEM customers who integrate and re-sell HP equipment.	

© Copyright 2010 Hewlett-Packard Development Company, L.P.

The information contained herein is subject to change without notice.

Microsoft and Windows NT are US registered trademarks of Microsoft Corporation. AMD, Opteron, and Hyper-Transport are trademarks of AMD Corporation in the United States and other countries.

The only warranties for HP products and services are set forth in the express warranty statements accompanying such products and services. Nothing herein should be construed as constituting an additional warranty. HP shall not be liable for technical or editorial errors or omissions contained herein.

For hard drives, 1GB = 1 billion bytes. Actual formatted capacity is less.