HPE ProLiant DL20 Gen10 Server User Guide

Part Number: 30-5C1DC581-005
Published: August 2021
Edition: 5

HPE ProLiant DL20 Gen10 Server User Guide

Abstract
This document is for the person who installs, administers, and troubleshoots servers and storage systems. Hewlett Packard Enterprise assumes you are qualified in the servicing of computer equipment and trained in recognizing hazards in products with hazardous energy levels, and are familiar with the weight and stability precautions for rack installations.

Part Number: 30-5C1DC581-005
Published: August 2021
Edition: 5

© Copyright 2018–2021 Hewlett Packard Enterprise Development LP

Notices

The information contained herein is subject to change without notice. The only warranties for Hewlett Packard Enterprise products and services are set forth in the express warranty statements accompanying such products and services. Nothing herein should be construed as constituting an additional warranty. Hewlett Packard Enterprise shall not be liable for technical or editorial errors or omissions contained herein.

Confidential computer software. Valid license from Hewlett Packard Enterprise required for possession, use, or copying. Consistent with FAR 12.211 and 12.212, Commercial Computer Software, Computer Software Documentation, and Technical Data for Commercial Items are licensed to the U.S. Government under vendor's standard commercial license.

Links to third-party websites take you outside the Hewlett Packard Enterprise website. Hewlett Packard Enterprise has no control over and is not responsible for information outside the Hewlett Packard Enterprise website.

Acknowledgments

Linux® is the registered trademark of Linus Torvalds in the U.S. and other countries.
Microsoft®, Windows®, and Windows Server® are either registered trademarks or trademarks of Microsoft Corporation in the United States and/or other countries.
Red Hat® Enterprise Linux® are registered trademarks of Red Hat, Inc. or its subsidiaries in the United States and other countries.
VMware ESXi™ and VMware vSphere® are registered trademarks or trademarks of VMware, Inc. and its subsidiaries in the United States and other jurisdictions.

All third-party marks are property of their respective owners.

Table of contents

Component identification 9
- Front panel components 9
  - Serial number/iLO information pull tab 11
- Front panel LEDs and buttons 12
  - Server UID LED 13
  - UID button functionality 13
  - Front panel LED power fault codes 14
- Rear panel components 14
- Rear panel LEDs 16
- System board components 17
  - System maintenance switch descriptions 19
  - DIMM slot locations 20
  - DIMM label identification 21
  - PCIe riser slot definitions 23
- Drive LED definitions 24
  - Low-profile LFF drive LED definitions 24
  - Smart Carrier (SC) drive LED definitions 26
- Drive bay numbering 27
- Fan bay numbering 29
- Fan mode behavior 29

Operations 30
- Power up the server 30
- Power down the server 30
- Remove the front bezel 31
- Extend the server from the rack 31
- Remove the server from the rack 34
- Install the server into the rack 36
- Remove the access panel 42
- Install the access panel 43
- Remove the riser cage 44
- Install the riser cage 45

Setup 47
- Initial server installation 47
  - HPE Installation Service 47

Setting up the server 47
Operational requirements 51
Space and airflow requirements 51
Temperature requirements 52
Power requirements 53
Electrical grounding requirements 53
Rack warnings and cautions 53
Server warnings and cautions 56
Electrostatic discharge 57
POST screen options 58
Hardware options installation 58
Introduction 58
Rack rail option 59
Installing the rack rail option 59
Installing the rack rail hook-and-loop strap 65
Installing the front bezel option 66
Drive options 67
Drive installation guidelines 67
Drive support information 68
Installing an LFF non-hot-plug drive 68
Installing an LFF hot-plug drive 73
Installing an SFF hot-plug drive 74
Power supply options 76
Hot-plug power supply calculations 76
Power supply warnings and cautions 76
Installing a redundant AC power supply 78
Installing a hot-plug DC power supply 79
Optical drive option 91
Installing an optical drive in an LFF chassis 91
Installing an optical drive in an SFF chassis 95
Installing the two-bay SFF drive cage option 100
Memory options 103
DIMM population information 103
Installing a DIMM 103
M.2 SSD/dedicated iLO/serial port enablement option 105
M.2 SSD/dedicated iLO/serial port enablement option components 105
M.2 SSD standoffs in the system board 106
Installing the M.2 SSD/dedicated iLO/serial port enablement board 107

Installing the serial port cable ... 114
Enabling the dedicated iLO management module ... 116
M.2 SSD option ... 116
Installing the M.2 NVMe SSD on the system board ... 117
Installing an M.2 NVMe SSD on the M.2 SSD/dedicated iLO/serial port enablement board ... 123
M.2 SATA SSD enablement option ... 127
Installing an M.2 SATA SSD ... 128
Storage controller options ... 132
Installing a modular Smart Array controller option (type-a, AROC) ... 132
Installing a Smart Array standup storage controller ... 134
Configuring an HPE Smart Array Gen10 controller ... 139
Energy pack option ... 139
HPE Smart Storage Battery ... 140
Installing an energy pack ... 140
Expansion card options ... 142
PCIe expansion slot population rules ... 142
Installing an expansion board ... 142
Installing the FlexibleLOM adapter ... 147
Transceiver option ... 149
Transceiver warnings and cautions ... 149
Installing a transceiver ... 150
Chassis intrusion detection switch option ... 151
Installing the chassis intrusion detection switch ... 151
HPE Trusted Platform Module 2.0 Gen10 option ... 153
Overview ... 153
HPE Trusted Platform Module 2.0 guidelines ... 153
Installing and enabling the HPE TPM 2.0 Gen10 option ... 154
Installing the Trusted Platform Module board ... 154
Preparing the server for installation ... 155
Installing the TPM board and cover ... 156
Preparing the server for operation ... 157
Enabling the Trusted Platform Module ... 158
Enabling the Trusted Platform Module as TPM 2.0 ... 158
Enabling the Trusted Platform Module as TPM 1.2 ... 159
Retaining the BitLocker recovery key/password ... 160
Cabling ... 160
Cabling guidelines ... 160

Storage cabling ... 162
Non-hot-plug drive cabling ... 163
Hot-plug drive cabling ... 166
Two-bay LFF hot-plug drive cabling ... 166
Four bay SFF hot-plug drive cabling ... 170
4+2 bay SFF hot-plug drive cabling ... 171
M.2 SATA SSD cabling ... 175
Energy pack cabling ... 177
Controller backup power cabling ... 178
Optical drive cabling ... 180
Fan cabling ... 182
Chassis intrusion detection switch cabling ... 183
Serial port cabling ... 184
Power supply cabling ... 185
Software and configuration utilities ... 187
Server mode ... 187
Product QuickSpecs ... 188
Active Health System Viewer ... 188
Active Health System ... 189
Active Health System data collection ... 189
Active Health System Log ... 190
HPE iLO 5 ... 190
iLO Federation ... 190
iLO Service Port ... 191
iLO RESTful API ... 192
RESTful Interface Tool ... 192
iLO Amplifier Pack ... 193
Integrated Management Log ... 193
Intelligent Provisioning ... 193
Intelligent Provisioning operation ... 194
Management security ... 195
Scripting Toolkit for Windows and Linux ... 196
UEFI System Utilities ... 196
Selecting the boot mode ... 197
Secure Boot ... 197
Launching the Embedded UEFI Shell ... 198
HPE Smart Storage Administrator ... 199
HPE InfoSight for servers ... 200

USB support ... 200
External USB functionality ... 200
Redundant ROM support ... 201
Safety and security benefits ... 201
Keeping the system current ... 201
Updating firmware or system ROM ... 201
Service Pack for ProLiant ... 202
Introduction to Smart Update Manager ... 202
Integrated Smart Update Tools ... 203
Updating firmware from the System Utilities ... 203
Updating the firmware from the UEFI Embedded Shell ... 204
Online Flash components ... 205
Drivers ... 205
Software and firmware ... 205
Operating system version support ... 206
HPE Pointnext Portfolio ... 206
Proactive notifications ... 207
Troubleshooting ... 207
NMI functionality ... 207
Troubleshooting resources ... 207
System battery replacement ... 208
System battery information ... 208
Removing and replacing the system battery ... 209
Safety, warranty, and regulatory information ... 211
Regulatory information ... 211
Notices for Eurasian Economic Union ... 211
Turkey RoHS material content declaration ... 212
Ukraine RoHS material content declaration ... 213
GS Gloss declaration ... 213
Warranty information ... 213
Specifications ... 214
Environmental specifications ... 214
Mechanical specifications ... 215
Power supply specifications ... 215
ATX 290 W Non-hot-plug Power Supply (92% efficiency) ... 216
ATX 290 W Platinum Non-hot-plug Power Supply (94% efficiency) ... 216
HPE 500 W Flex Slot Platinum Hot-plug Low Halogen Power Supply ... 217
HPE 800W Flex Slot -48VDC Hot plug Low Halogen Power Supply ... 218

Websites....220
Support and other resources....221
Accessing Hewlett Packard Enterprise Support....221
ClearCARE technical support....222
Accessing updates....222
Customer self repair....223
Remote support....223
Documentation feedback....224

Component identification

Front panel components

Two-bay LFF non-hot-plug drive model

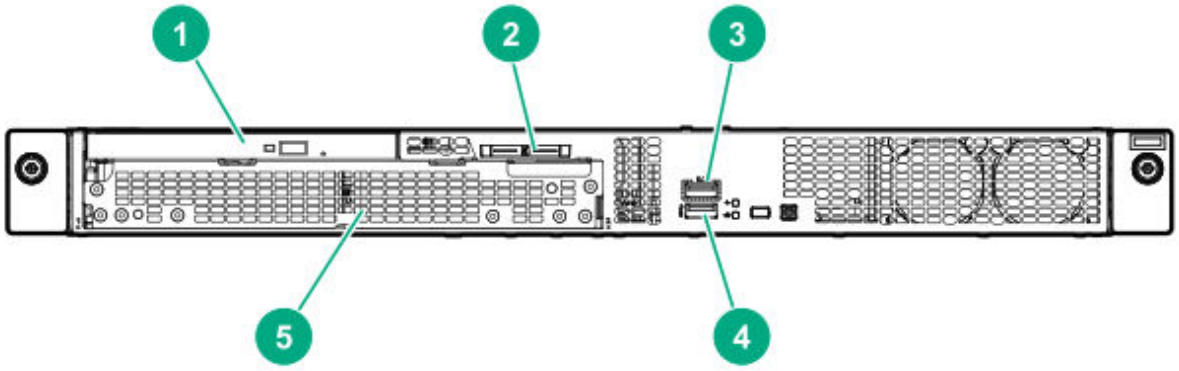

Item	Description
1	Optical drive (optional)
2	Serial number/iLO information pull tab
3	iLO Service Port
4	USB 3.0 port
5	LFF non-hot-plug drive cage

Two-bay LFF hot-plug drive model

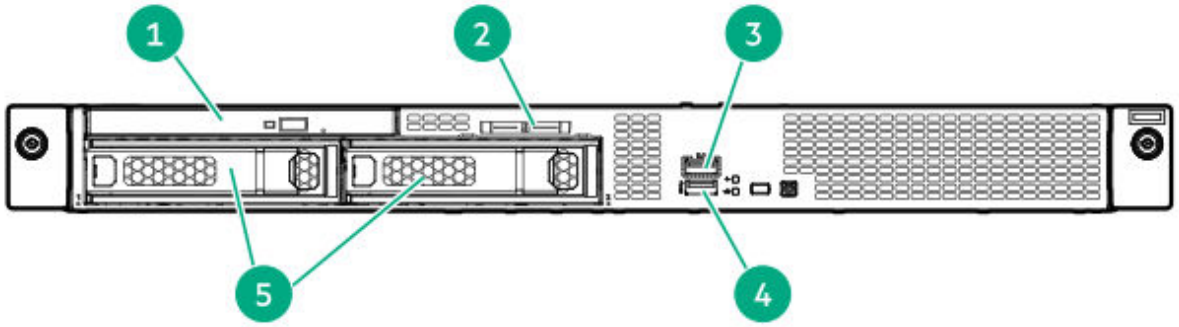

Item	Description
1	Optical drive (optional)
2	Serial number/iLO information pull tab
3	iLO Service Port
4	USB 3.0 port
5	LFF hot-plug drives

Four-bay SFF hot-plug drive model

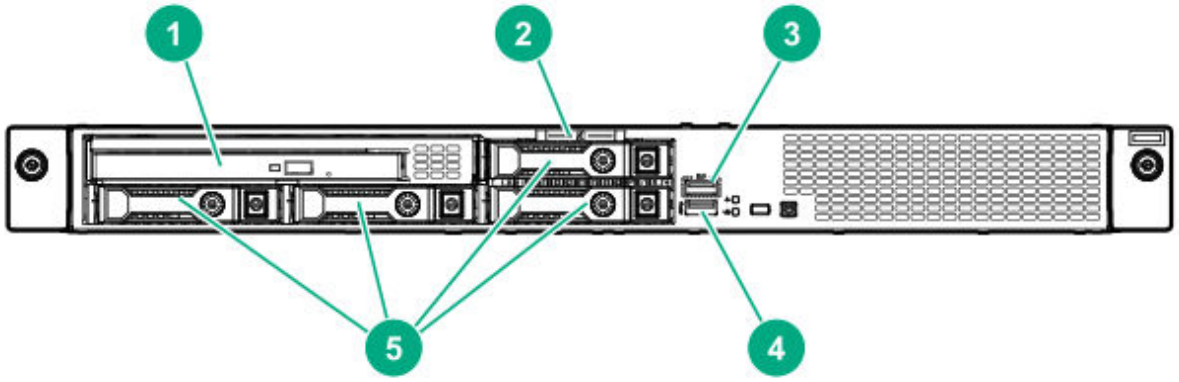

Item	Description
1	Media bay 1
2	Serial number/iLO information pull tab
3	iLO Service Port

Item	Description
4	USB 3.0 port
5	SFF hot-plug drives

[1]The media drive bay supports an optical drive or a two-bay SFF drive cage.

Six-bay SFF hot-plug drive model

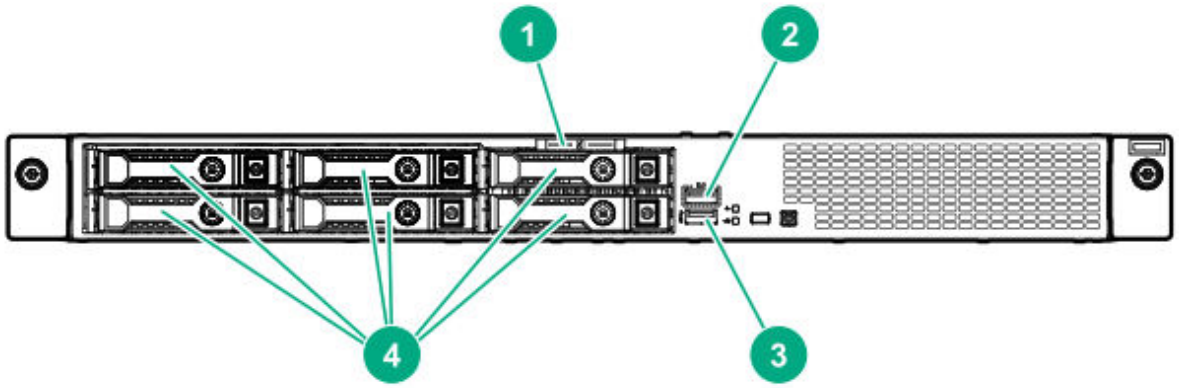

Item	Description
1	Serial number/iLO information pull tab
2	iLO Service Port
3	USB 3.0 port
4	SFF hot-plug drives

Serial number/iLO information pull tab

The serial number/iLO information pull tab is double-sided. One side shows the server serial number and the customer asset tag label. The other side shows the default iLO account information and QR code label.

Use a mobile device to scan the QR code label to display the server mobile product page (**https://www.hpe.com/qref/dl20gen10**). This page contains links to server setup information, spare part numbers, QuickSpecs, troubleshooting resources, and other useful product links.

Front panel LEDs and buttons

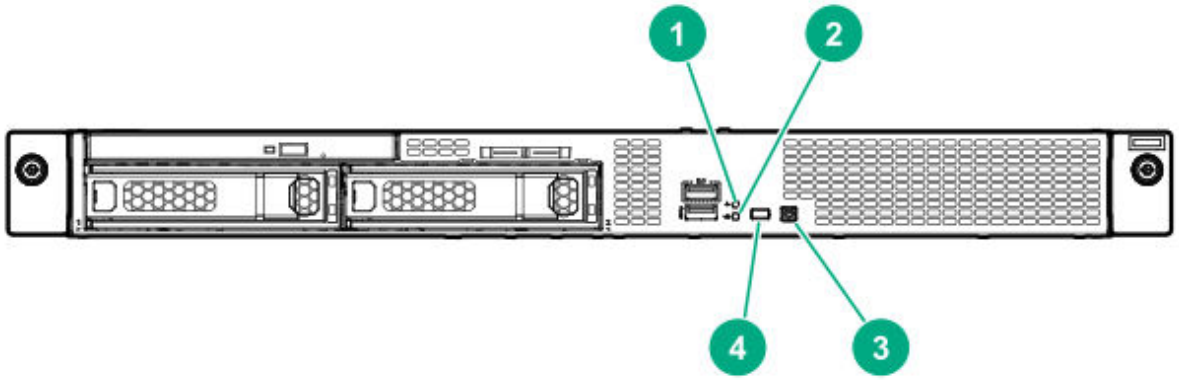

Item	Description	Status	Definition
1	Health LED [1]	Solid green	Normal
		Flashing green	iLO is rebooting
		Flashing amber	System degraded [2]
		Flashing red	System critical [2]
2	NIC status LED [1]	Solid green	Linked to network
		Flashing green	Network active
		Off	No network activity
3	Power On/Standby button and system power LED [1]	Solid green	System on
		Flashing green	Performing power-on sequence
		Solid amber	System in standby
		Off	No power present [3]

Item	Description	Status	Definition
4	UID button/ LED [1]	Solid blue	Activated
		Flashing blue	• 1 flash per second = Remote management or firmware upgrade in progress • 4 flashes per second = iLO manual reboot sequence initiated • 8 flashes per second = iLO manual reboot sequence in progress
		Off	Deactivated

[1] When the LEDs described in this table flash simultaneously, a power fault has occurred. For more information, see Front panel LED power fault codes.

[2] If the health LED indicates a degraded or critical state, review the system IML or use iLO to review the system health status.

[3] Facility power is not present, power cord is not attached, no power supplies are installed, or power supply failure has occurred.

Server UID LED

The UID LED is used to locate a particular server when it is deployed in a dense rack with other equipment. Activating the UID LED helps an on-site technician to quickly identify a server for maintenance tasks.

UID button functionality

The UID button can be used to display the Server Health Summary when the server will not power on. For more information, see the iLO user guide on the Hewlett Packard Enterprise website (**https://www.hpe.com/support/ilo-docs**).

Front panel LED power fault codes

The following table provides a list of power fault codes, and the subsystems that are affected. Not all power faults are used by all servers.

Subsystem	LED behavior
System board	1 flash
Processor	2 flashes
Memory	3 flashes
Riser board PCIe slots	4 flashes
FlexibleLOM	5 flashes
Storage controller	6 flashes
System board PCIe slots	7 flashes
Power backplane	8 flashes
Storage backplane	9 flashes
Power supply	10 flashes
PCIe expansion cards installed in riser board	11 flashes
Chassis	12 flashes
GPU card	13 flashes

Rear panel components

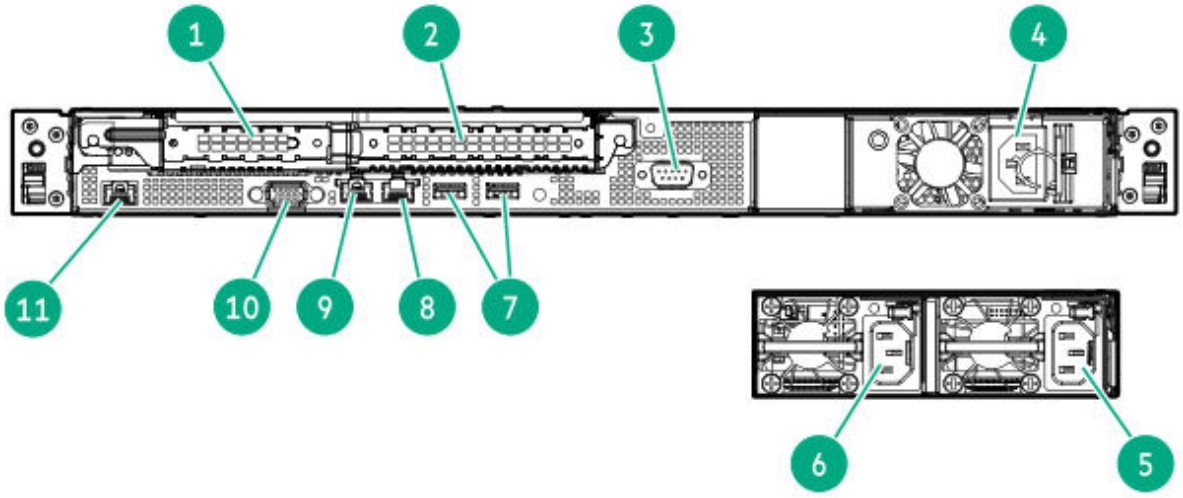

Item	Description
1	Slot 1 PCIe3 x8 (8, 4, 1)/FlexibleLOM slot [1]
2	Slot 2 PCIe3 x8 (8, 4, 1) [1]
3	Serial port (optional)
4	Non-hot-plug power supply
5	Hot-plug power supply bay 1 (optional)
6	Hot-plug power supply bay 2 (optional)
7	USB 3.0 ports (2)
8	NIC port 2
9	NIC 1/iLO Shared Network Port [2]
10	VGA port
11	iLO Dedicated Network Port (optional)

[1] For more information, see PCIe riser slot definitions.

[2] When a FlexibleLOM adapter is installed in a server with default iLO settings, the shared iLO port function is assigned to port 1 of the FlexibleLOM adapter.

Rear panel LEDs

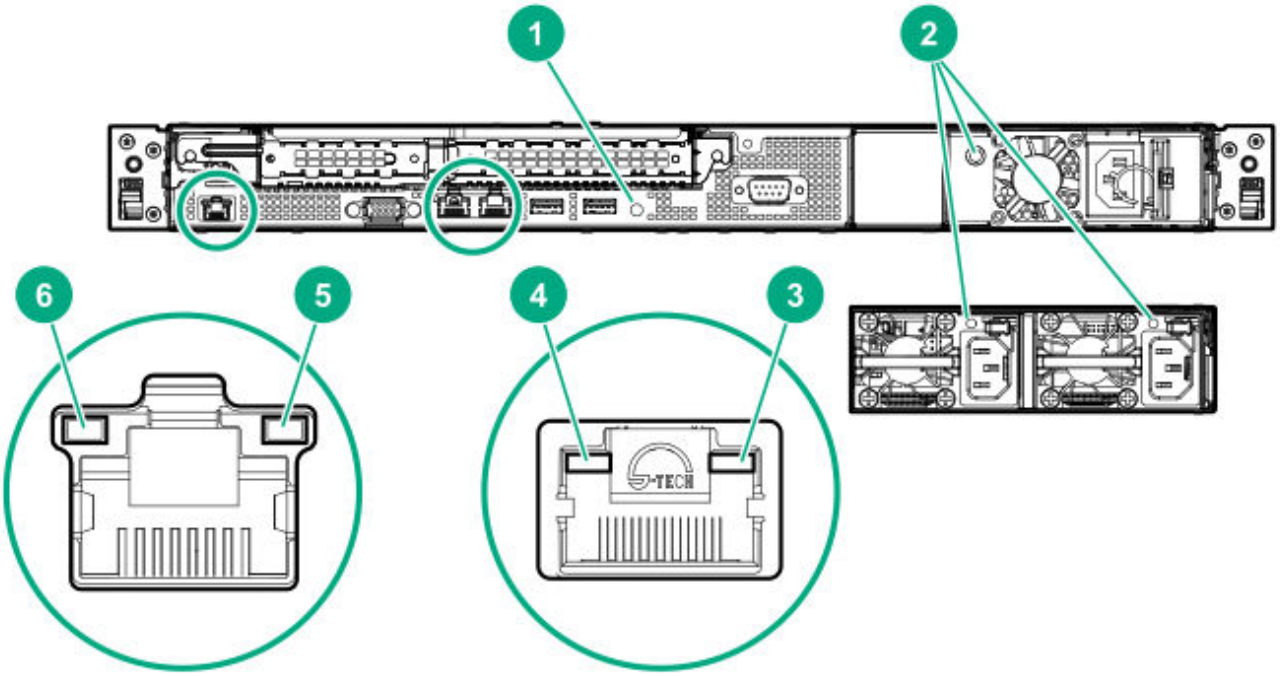

Item	LED	Status	Definition
1	UID	Solid blue	Activated
		Flashing blue	System is being managed re motely.
		Off	Deactivated
2	Power supply	Solid green	Normal
		Off	System is off or power suppl y has failed.
3	NIC/iLO status	Solid green	Linked to network
		Flashing green	Network active
		Off	No network activity
4	NIC link	Solid green	Network link
		Off	No network link

Item	LED	Status	Definition
5	iLO status	Solid green	Linked to network
		Flashing green	Network active
		Off	No network activity
6	iLO link	Solid green	Network link
		Off	No network link

System board components

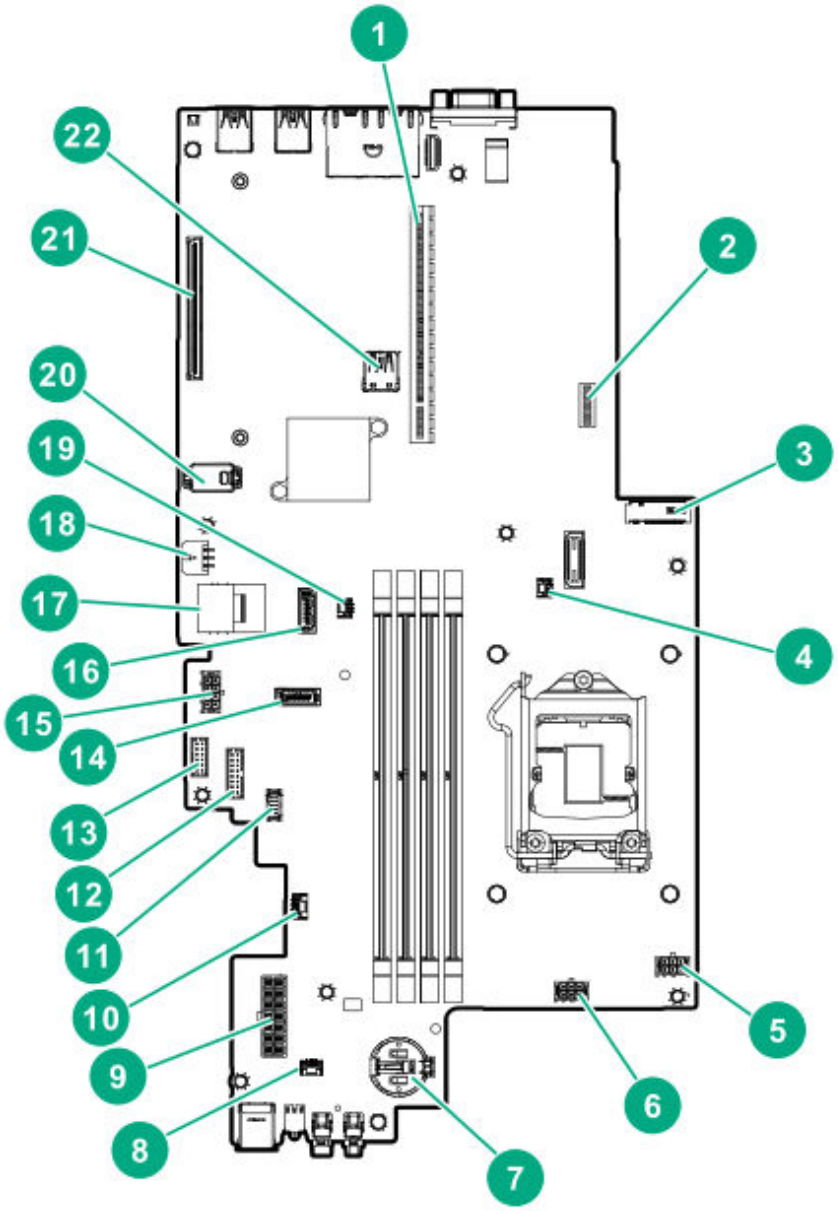

Item	Description
1	PCIe riser connector 1
2	System maintenance switch
3	M.2 SSD slot
4	Controller backup power connector for slot 1
5	Fan connector 2
6	Fan connector 1

Item	Description
7	System battery
8	Chassis intrusion detection switch
9	Non-hot-plug or Flexible Slot power supply connector
10	Two-bay SFF drive sideband connector
11	Energy pack connector
12	Non-hot-plug or Flexible Slot power supply sideband connecto r
13	Flexible Slot power supply connector
14	x1 SATA port 2
15	Drive backplane and optical drive power connector
16	x1 SATA port 1
17	x4 SATA port (Mini-SAS connector)
18	Fan connector 3
19	Controller backup power connector for slot 2
20	TPM connector
21	Smart Array modular controller connector (AROC)
22	Internal USB 3.0 connector

[1] For more information on the supported riser board slots, see PCIe riser slot definitions .

System maintenance switch descriptions

Position	Default	Function
S1 [1]	Off	• Off = iLO 5 security is enabled. • On = iLO 5 security is disabled.
S2	Off	Reserved

Position	Default	Function
S3	Off	Reserved
S4	Off	Reserved
S5 [1]	Off	• Off = Power-on password is enabled. • On = Power-on password is disabled.
S6 [1], [2], [3]	Off	• Off = No function • On = Restore default manufacturing settings
S7	Off	Reserved
S8	—	Reserved
S9	—	Reserved
S10	—	Reserved
S11	—	Reserved
S12	—	Reserved

[1] To access the redundant ROM, set S1, S5, and S6 to On.
[2] When the system maintenance switch position 6 is set to the On position, the system is prepared to restore all configuration settings to their manufacturing defaults.
[3] When the system maintenance switch position 6 is set to the On position and Secure Boot is enabled, some configurations cannot be restored. For more information, see Secure Boot.

DIMM slot locations

The arrow in the illustration points to the front of the server.

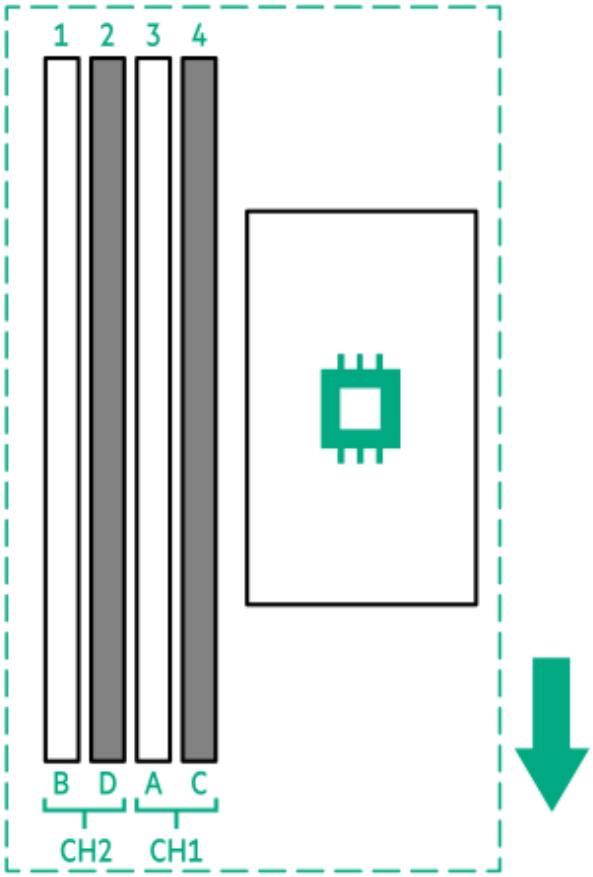

DIMM label identification

To determine DIMM characteristics, see the label attached to the DIMM. The information in this section helps you to use the label to locate specific information about the DIMM.

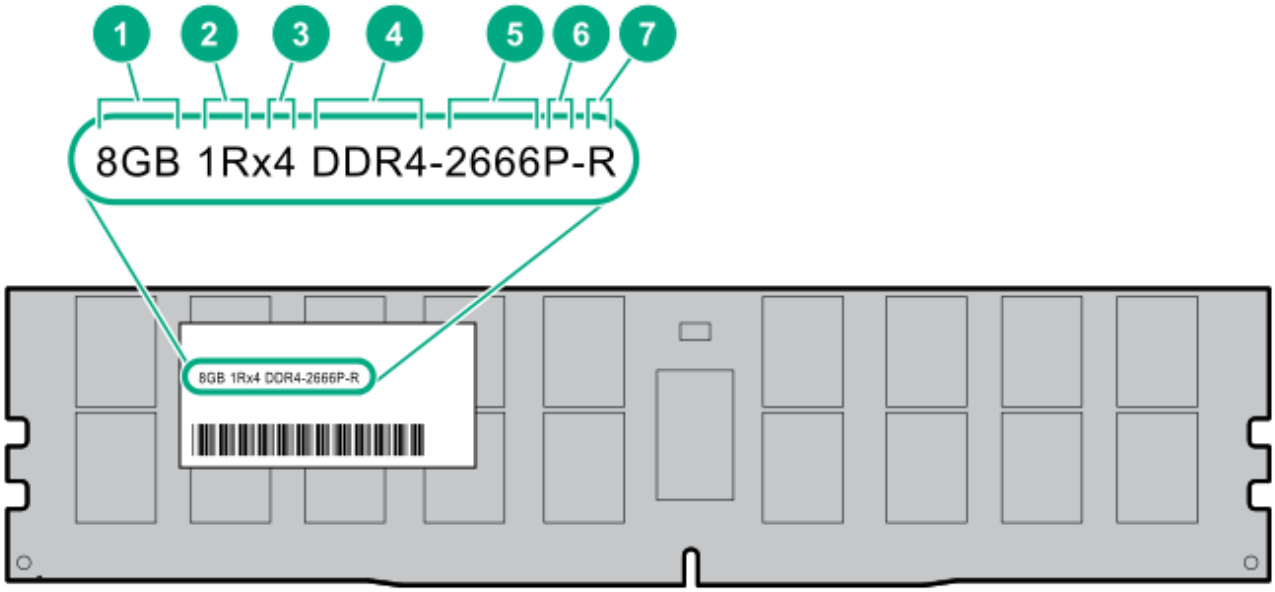

Item	Description	Example
1	Capacity	8 GB 16 GB 32 GB 64 GB 128 GB
2	Rank	1R = Single rank 2R = Dual rank 4R = Quad rank 8R = Octal rank
3	Data width on DRAM	x4 = 4-bit x8 = 8-bit x16 = 16-bit
4	Memory generation	PC4 = DDR4
5	Maximum memory speed	2133 MT/s 2400 MT/s 2666 MT/s

Item	Description	Example
		2933 MT/s
6	CAS latency	P = CAS 15-15-15 T = CAS 17-17-17 U = CAS 20-18-18 V = CAS 19-19-19 (for RDIMM, LRDIMM) V = CAS 22-19-19 (for 3DS TSV LRDIMM) Y = CAS 21-21-21 (for RDIMM, LRDIMM) Y = CAS 24-21-21 (for 3DS TSV LRDIMM)
7	DIMM type	R = RDIMM (registered) L = LRDIMM (load reduced) E = Unbuffered ECC (UDIMM)

For more information about product features, specifications, options, configurations, and compatibility, see the HPE DDR4 SmartMemory QuickSpecs on the Hewlett Packard Enterprise website (**https://www.hpe.com/support/DDR4SmartMemoryQS**).

PCIe riser slot definitions

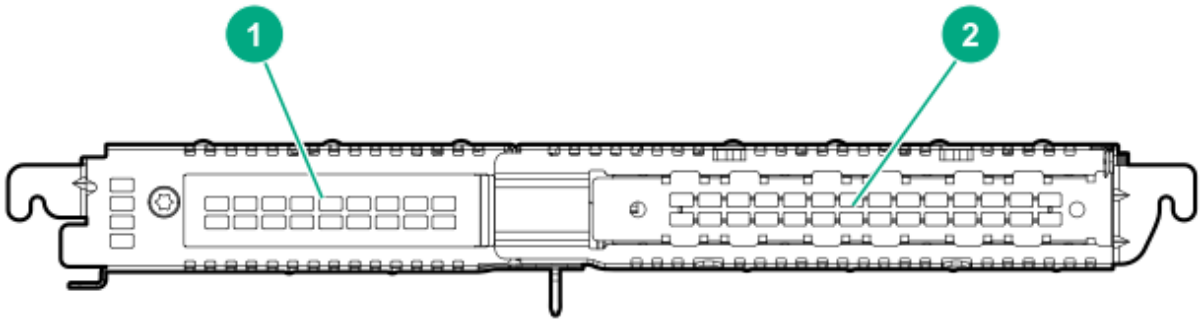

FlexibleLOM riser board

Item	Description	Supported options
1	FlexibleLOM slot, PCIe3 x8 (with NCSI)	FlexibleLOM adapter
2	Slot 2, PCIe3 x16 (8,4,1)	Full-height, half-length expansion boards

Two-slot PCIe riser board

Item	Description	Supported options
1	Slot 1, PCIe3 x8 (8,4,1)	Half-height, half-length expansion boards
2	Slot 2, PCIe3 x16 (8,4,1)	Full-height, half-length expansion boards

Drive LED definitions

Low-profile LFF drive LED definitions

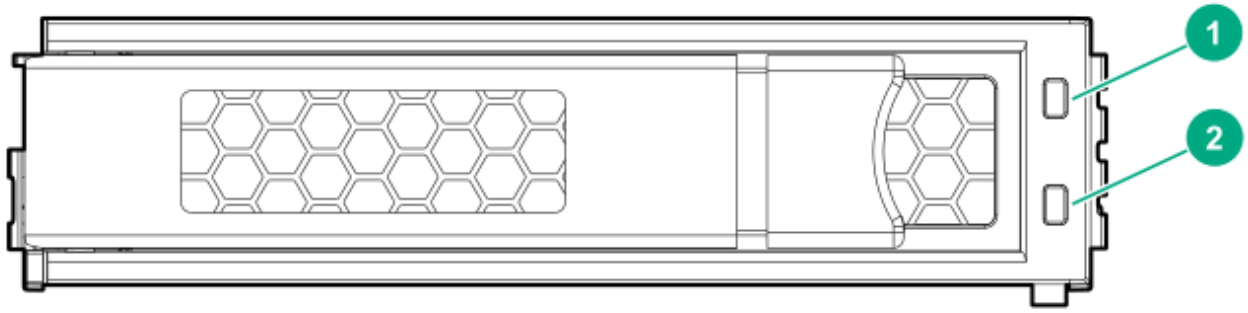

Item	LED	Status	Definition
1	Fault\Locate	Solid amber	The drive has failed.
		Solid blue	The drive is operating normally and being identified by a management application.
		Flashing amber/blue (1 flash per second)	The drive has failed, or a predictive failure alert has been received for this drive; it also has been identified by a management application.
		Flashing amber (1 flash per second)	A predictive failure alert has been received for this drive. Replace the drive as soon as possible.
2	Online\Activity	Solid green	The drive is online and has no activity.
		Flashing green (4 flashes per second)	The drive is operating normally and has activity.
		Flashing green (1 flash per second)	The drive is doing one of the following: • Rebuilding • Performing a RAID migration • Performing a strip size migration • Performing a capacity expansion • Performing a logical drive extension • Erasing

Item	LED	Status	Definition
			• Spare part activation
		Off	The drive is not configured by a RAID controller or a spare drive.

Smart Carrier (SC) drive LED definitions

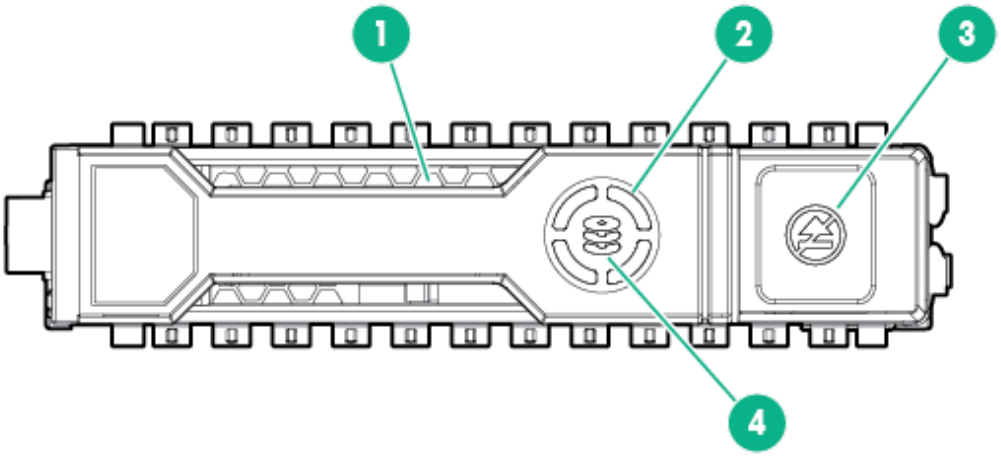

Item	LED	Status	Definition
1	Locate	Solid blue	The drive is being identified by a host application.
		Flashing blue	The drive carrier firmware is being updated or requires an update.
2	Activity ring	Rotating green	Drive activity
		Off	No drive activity
3	Do not remove	Solid white	Do not remove the drive. Removing the drive causes one or more of the logical drives to fail.
		Off	Removing the drive does not cause a logical drive to fail.

Item	LED	Status	Definition
4	Drive status	Solid green	The drive is a member of one or more logical drives.
		Flashing green	The drive is doing one of the following: • Rebuilding • Performing a RAID migration • Performing a strip size migration • Performing a capacity expansion • Performing a logical drive extension • Erasing • Spare part activation
		Flashing amber/green	The drive is a member of one or more logical drives and predicts the drive will fail.
		Flashing amber	The drive is not configured and predicts the drive will fail.
		Solid amber	The drive has failed.
		Off	The drive is not configured by a RAID controller or a spare drive.

Drive bay numbering

Two-bay LFF non-hot-plug drive model

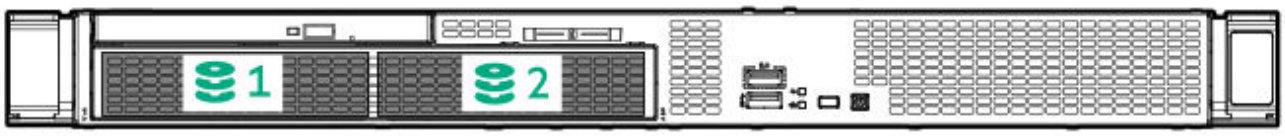

Two-bay LFF hot-plug drive model

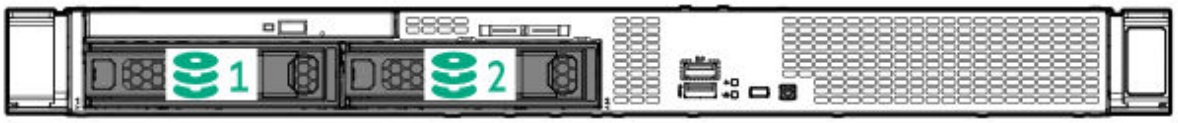

Four-bay SFF hot-plug drive model



Six-bay SFF hot-plug drive model



Fan bay numbering

To provide sufficient airflow to the system, the server is by default populated by three fans.

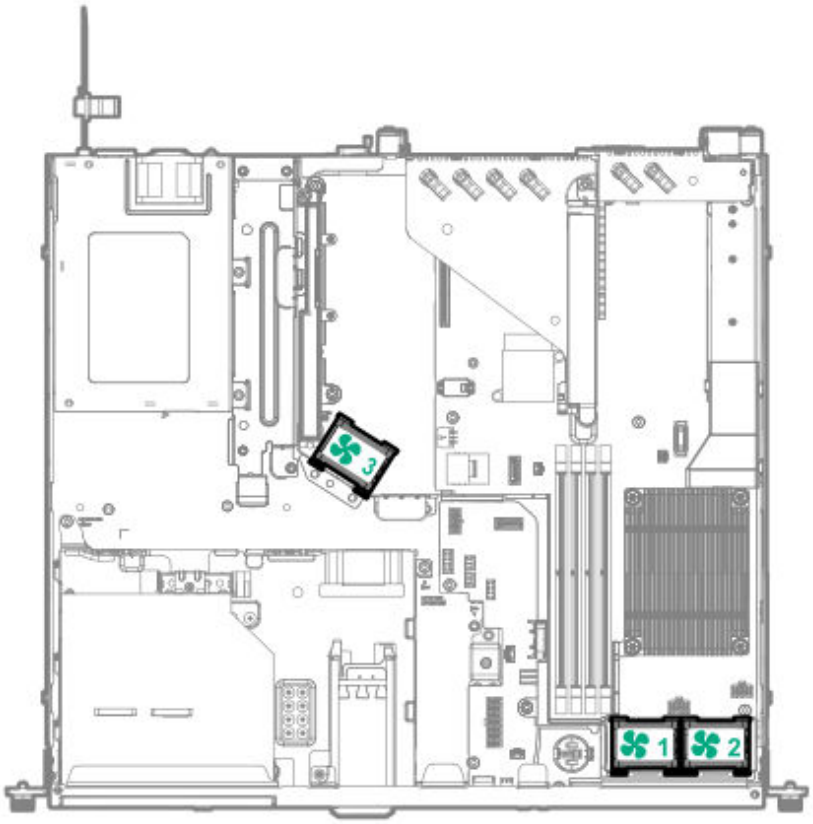

Fan mode behavior

The server supports nonredundant fan mode. If a fan fails or is missing, the following behaviors are exhibited:

- The health LED flashes red.
- The operating system performs a graceful shutdown.

Operations

Power up the server

To power up the server, use one of the following methods:

- Press the Power On/Standby button.
- Use the virtual power button through iLO.

Power down the server

Before powering down the server for any upgrade or maintenance procedures, perform a backup of critical server data and programs.

> **IMPORTANT:**
> When the server is in standby mode, auxiliary power is still being provided to the system.

To power down the server, use one of the following methods:

- Press and release the Power On/Standby button.
  This method initiates a controlled shutdown of applications and the OS before the server enters standby mode.
- Press and hold the Power On/Standby button for more than 4 seconds to force the server to enter standby mode.
  This method forces the server to enter standby mode without properly exiting applications and the OS. If an application stops responding, you can use this method to force a shutdown.
- Use a virtual power button selection through iLO 5.
  This method initiates a controlled remote shutdown of applications and the OS before the server enters standby mode.

Before proceeding, verify that the server is in standby mode by observing that the system power LED is amber.

Remove the front bezel

Procedure

1. If installed, unlock and remove the Kensington security lock.

   For more information, see the lock documentation.

2. Press and hold the front bezel latch.
3. Open the front bezel.
4. Detach the front bezel from the chassis ear.

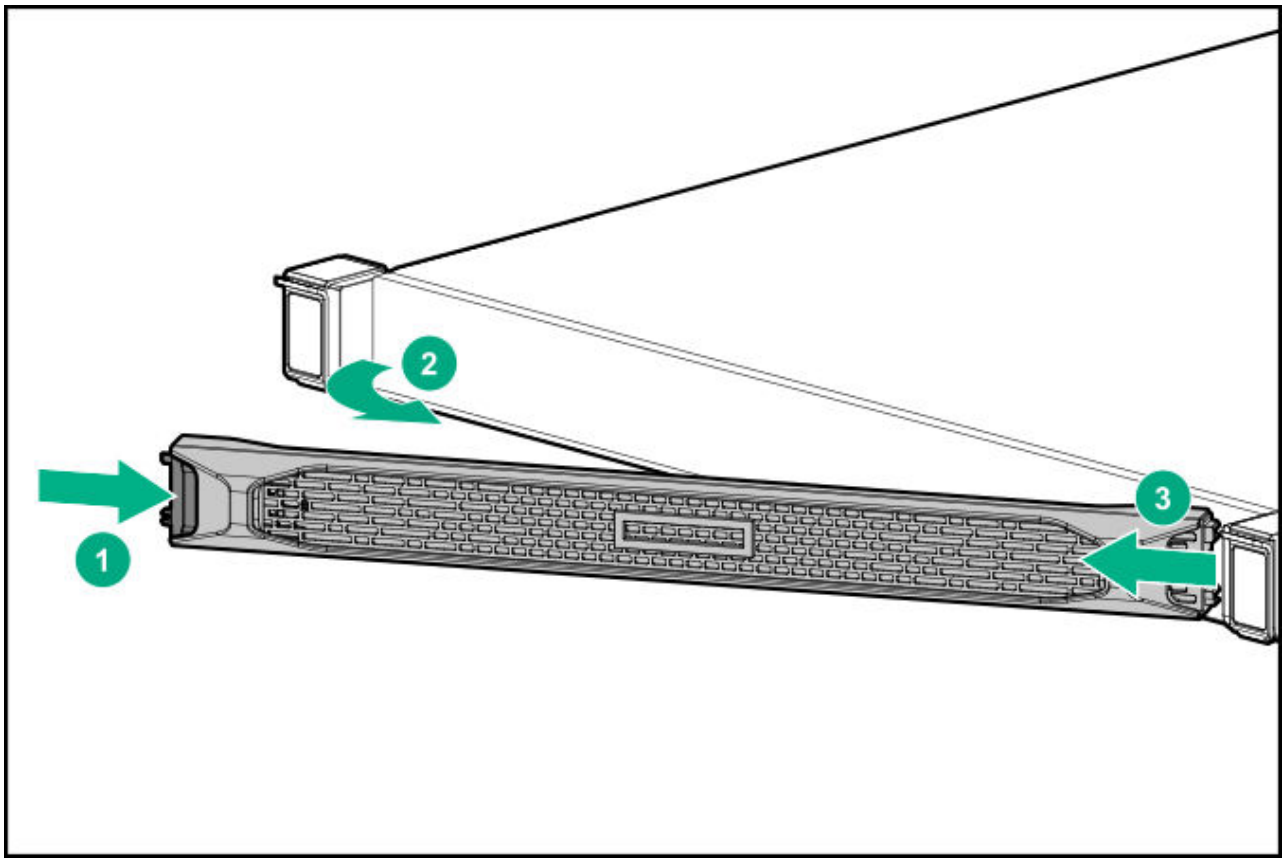

Extend the server from the rack

WARNING:

To reduce the risk of personal injury or equipment damage, be sure that the rack is adequately stabilized before extending a component from the rack.

Prerequisites

Before you perform this procedure, make sure that you have a T-25 Torx screwdriver available.

Procedure

1. If installed, remove the front bezel.
2. Power down the server.
3. Remove all power:
   a. Disconnect each power cord from the power source.
   b. Disconnect each power cord from the server.
4. Disconnect all peripheral cables from the server.
5. Do one of the following:
   - For a server that has thumbscrew chassis ears, do the following:
     a. Loosen the captive thumbscrews that secure the server to the rack.
     b. Slide the server out of the rack.

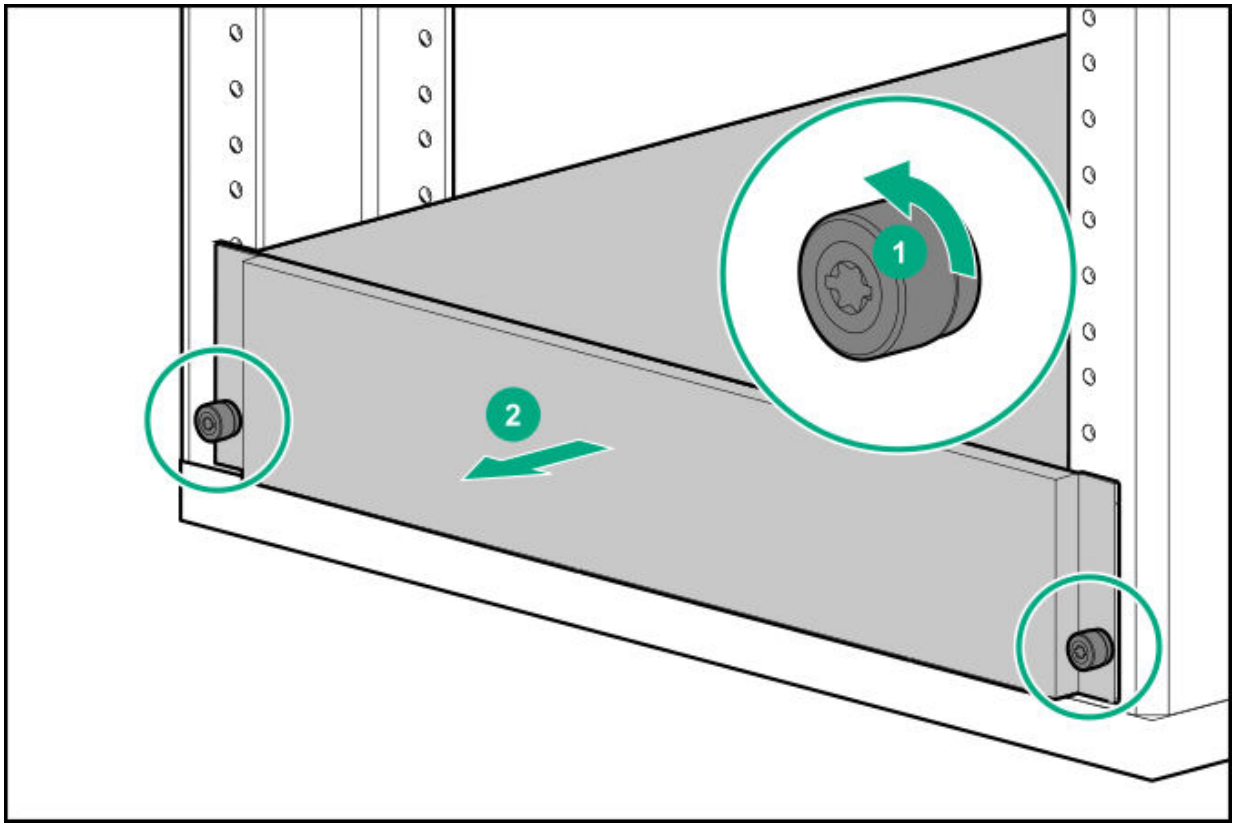

- For a server that has quick-release latch chassis ears, do the following:
  a. Open the latches on both sides of the server.
  b. If necessary, loosen the shipping screws.
  c. Slide the server out of the rack.

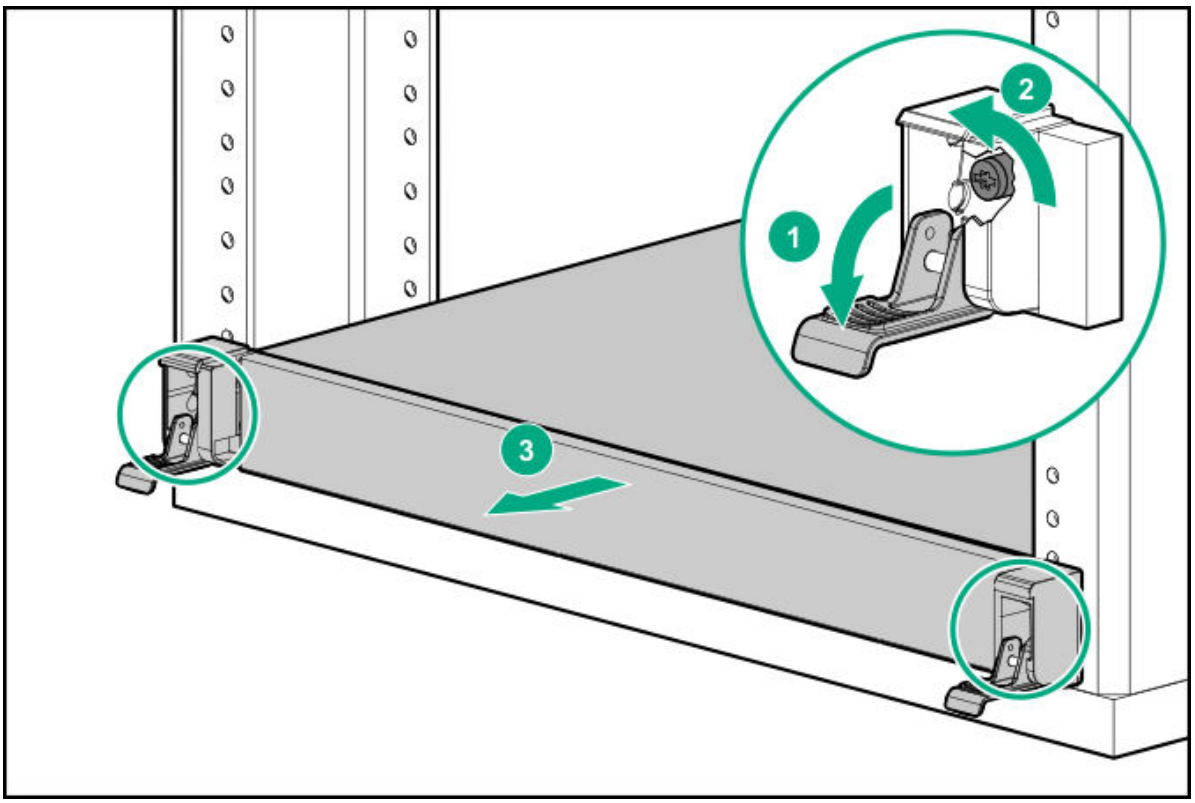

6. Extend the server on the rack rails until the server rail-release latches are engaged.

Remove the server from the rack

WARNING: This server is heavy. To reduce the risk of personal injury or damage to the equipment:

- Observe local occupational health and safety requirements and guidelines for manual material handling.
- Get help to lift and stabilize the product during installation or removal, especially when the product is not fastened to the rails. Hewlett Packard Enterprise recommends that a minimum of two people are required for all rack server installations. A third person may be required to help align the server if the server is installed higher than chest level.
- Use caution when installing the server in or removing the server from the rack; it is unstable when not fastened to the rails.

Procedure

1. If installed, remove the front bezel.
2. Power down the server.
3. Remove all power:
   a. Disconnect each power cord from the power source.
   b. Disconnect each power cord from the server.
4. Disconnect all peripheral cables from the server.
5. Extend the server from the rack.
6. Press and hold the chassis release latches, and then remove the server from the rack.

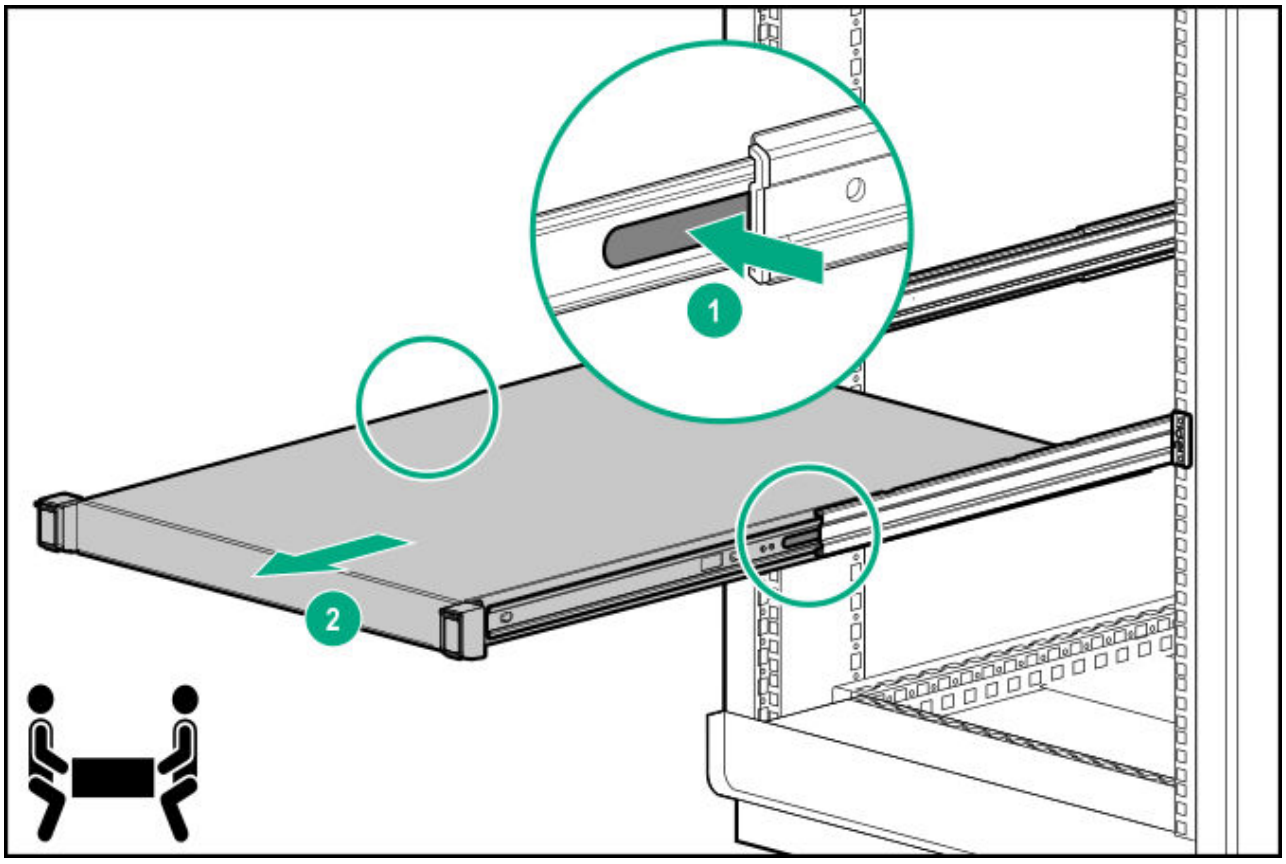

7. Place the server on a sturdy, level surface.

Install the server into the rack

Prerequisites

Before you perform this procedure, make sure that you have a T-25 Torx screwdriver available.

Procedure

1. Install the server into the rack:
   a. Insert the server sliding rails into the rack mounting rails.
   b. Slide the server into the rack until the chassis ears are engage with the rack column.

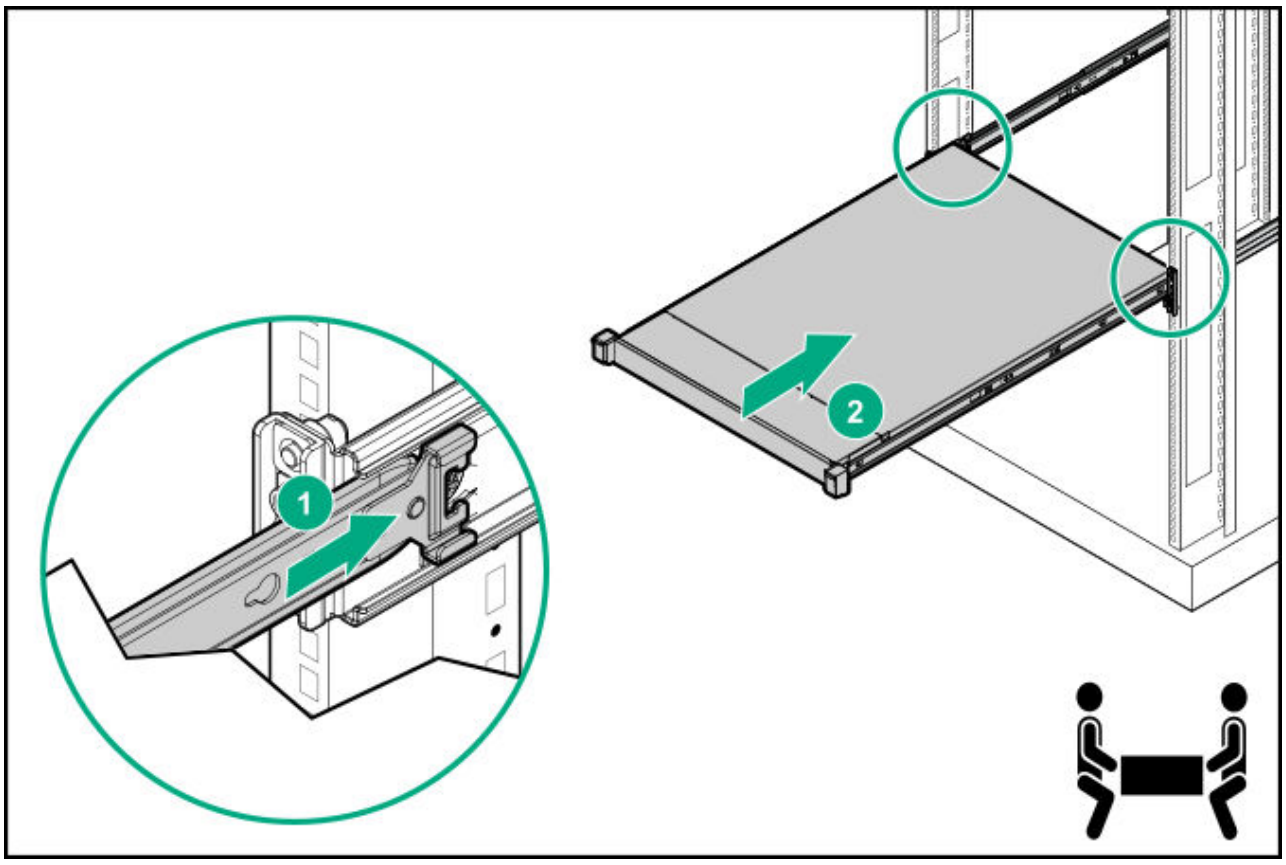

2. Do one of the following:
   - For a server that has thumbscrew chassis ears, tighten the captive thumbscrews.

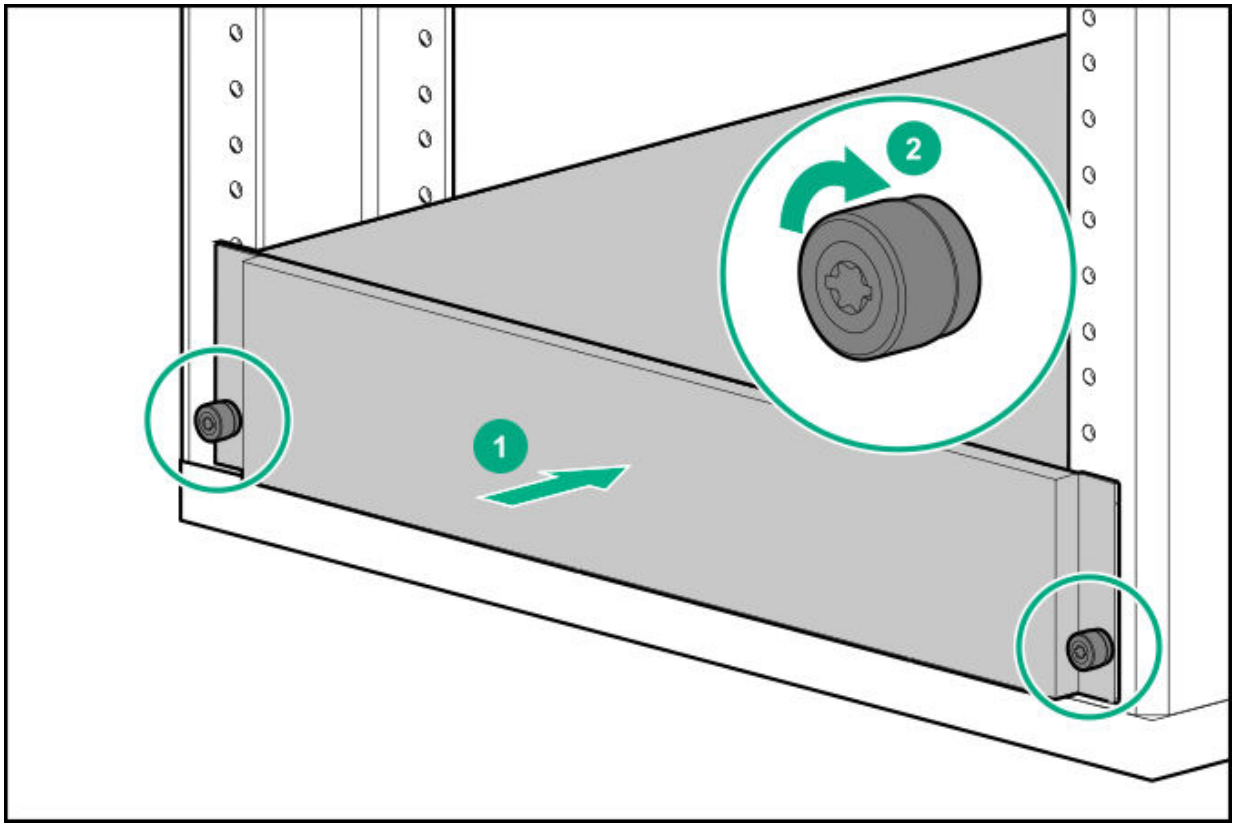

- For a server that has quick-release latch chassis ears, if necessary, open the latches and tighten the shipping screws.

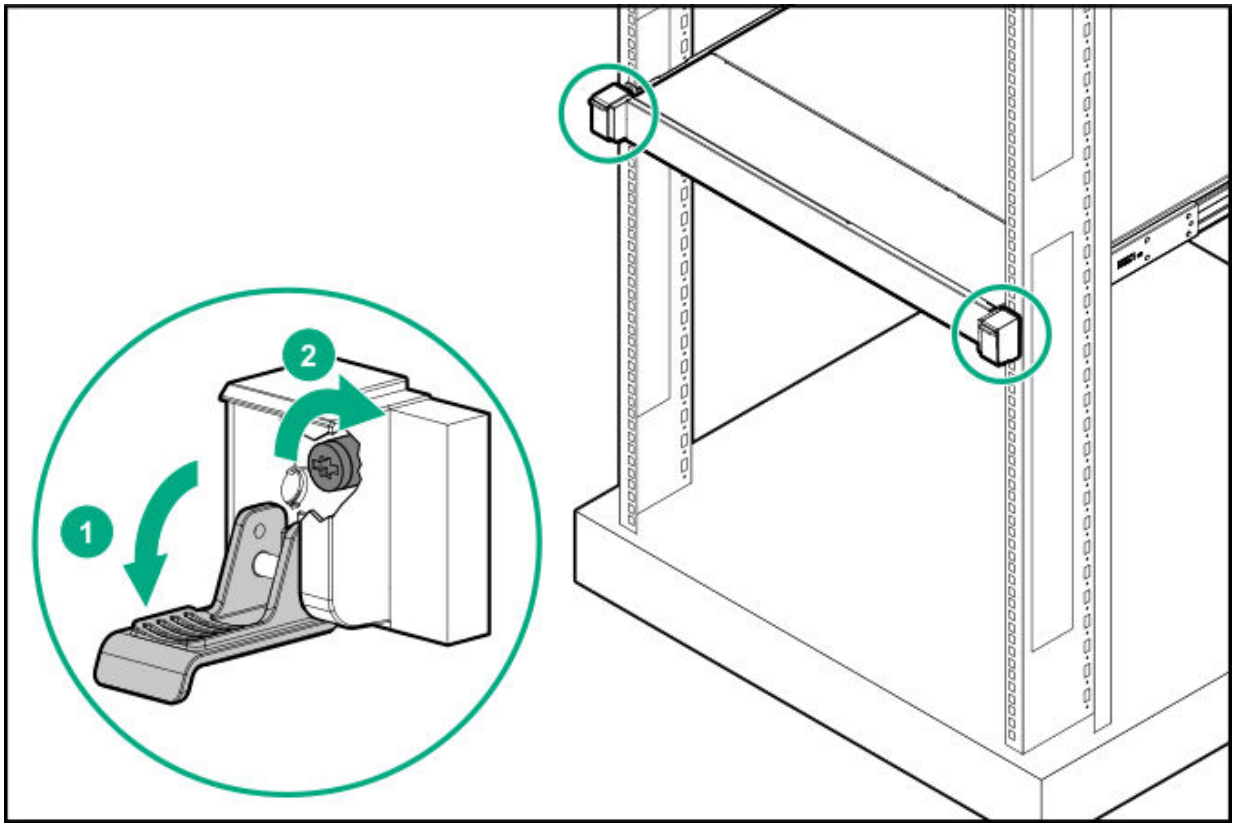

3. Connect the peripheral devices to the server.

   For information on identifying I/O ports, see Rear panel components.

4. **For a hot-plug power supply:** To prevent accidental power cord disconnection when sliding the server in and out of the rack, secure the power cord in the strain relief strap attached to the power supply handle:

   a. Connect the power cord to the power supply.

   b. Unwrap the strain relief strap from the power supply handle.

   > **CAUTION:** Avoid tight bend radii to prevent damaging the internal wires of a power cord or a server cable. Never bend power cords and server cables tight enough to cause a crease in the sheathing.

   c. Secure the power cord with the strain relief strap.

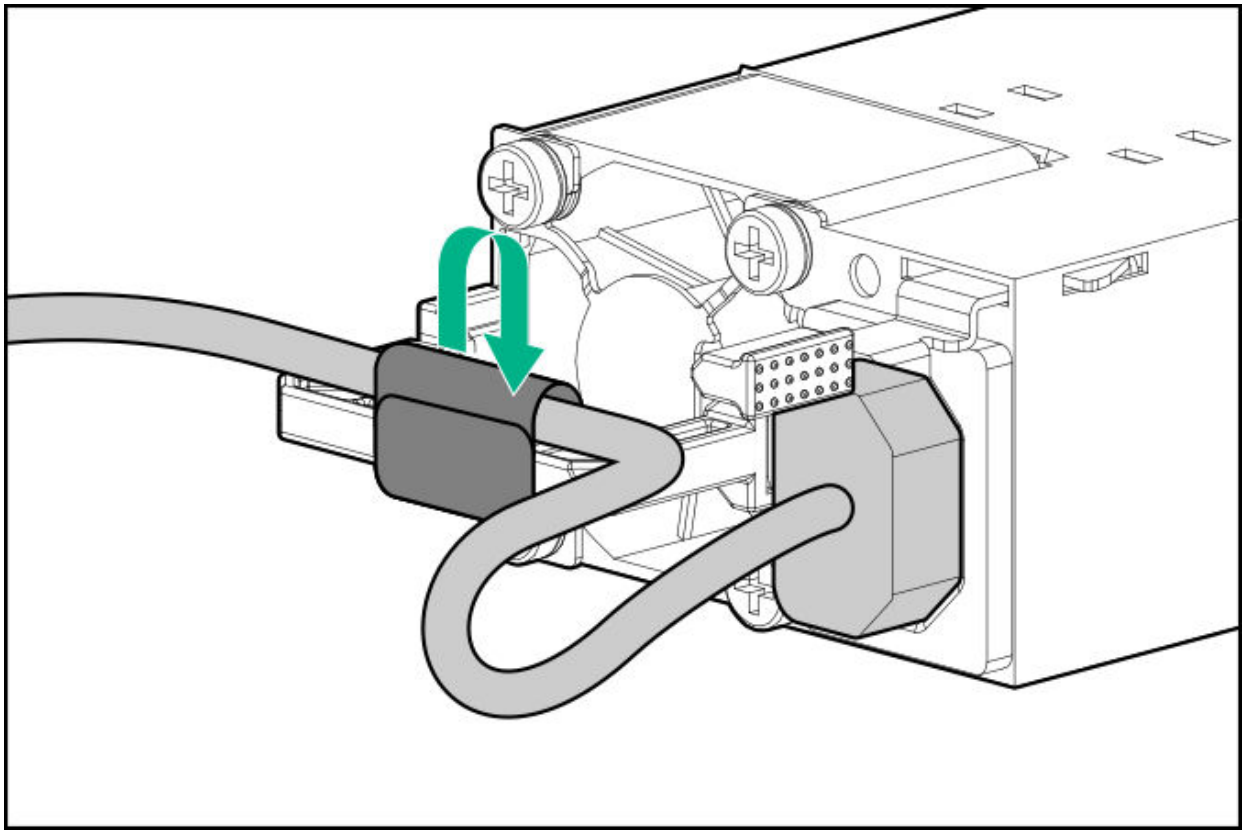

5. **For a non-hot-plug power supply:** To prevent the accidental disconnection of the power cord when sliding the server into and from the rack, secure the power cord through the strain relief clip:

   a. Pull the release tab and then slide the clip backward to avoid having the power cord connection blocked by the clip.

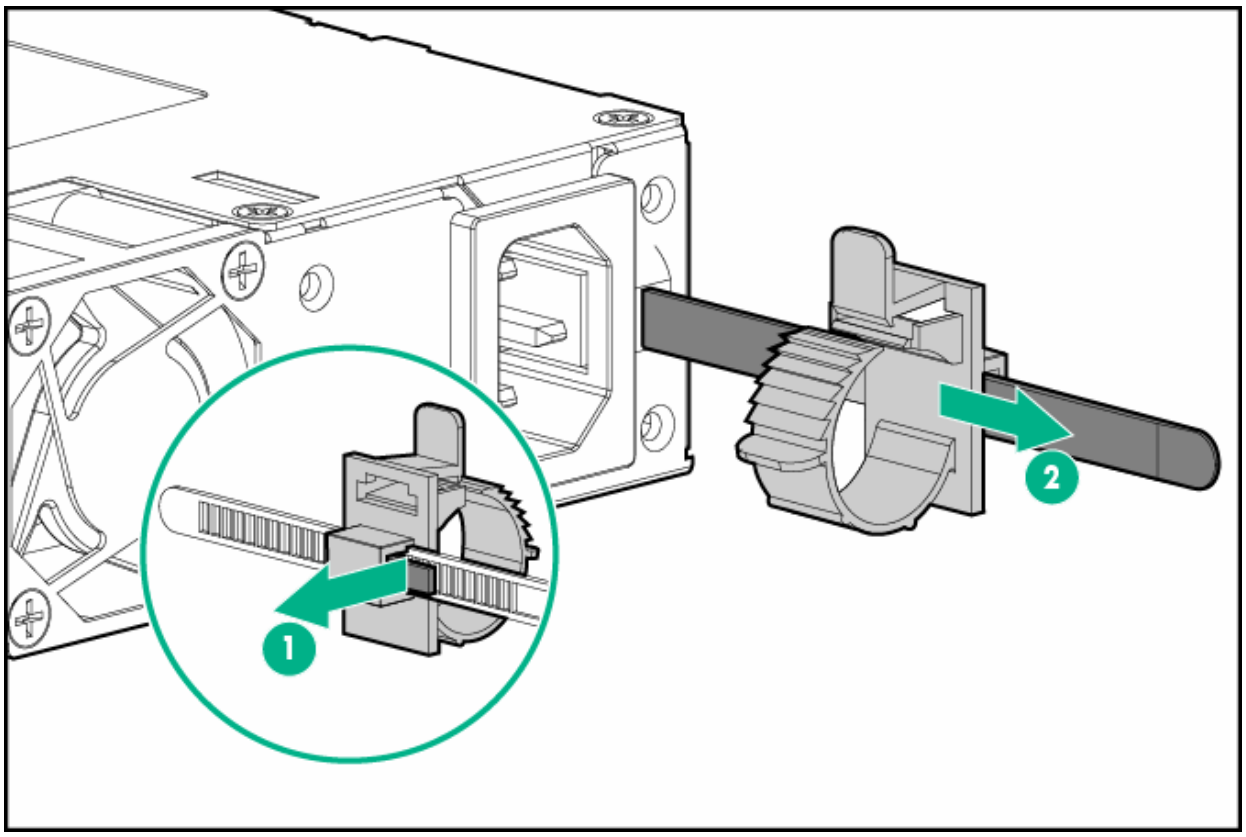

b. Connect the power cord to the power supply.

c. Press the top part of the clip, and then pull the clip open.

d. Position the power cord inside the clip, and then close the clip.

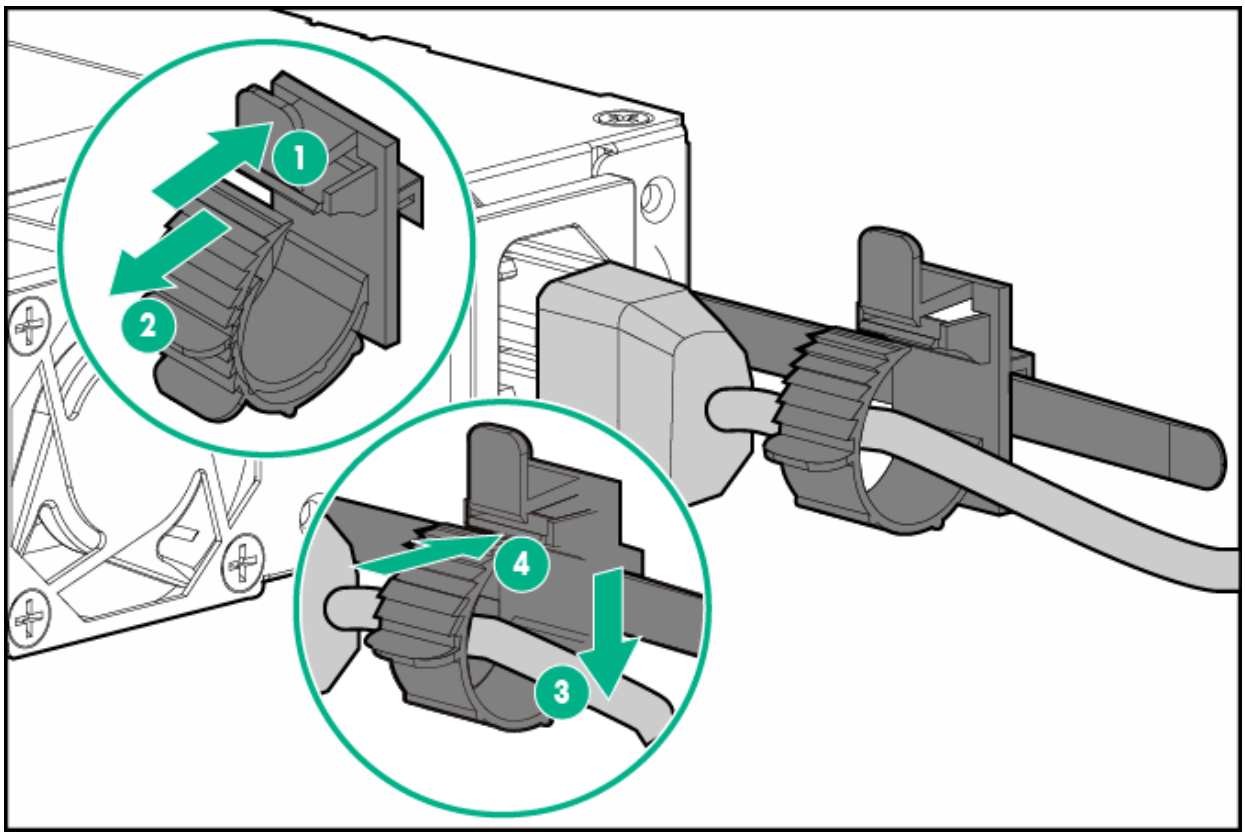

e. Slide the clip forward until it is flush against the edge of the power cord plug.

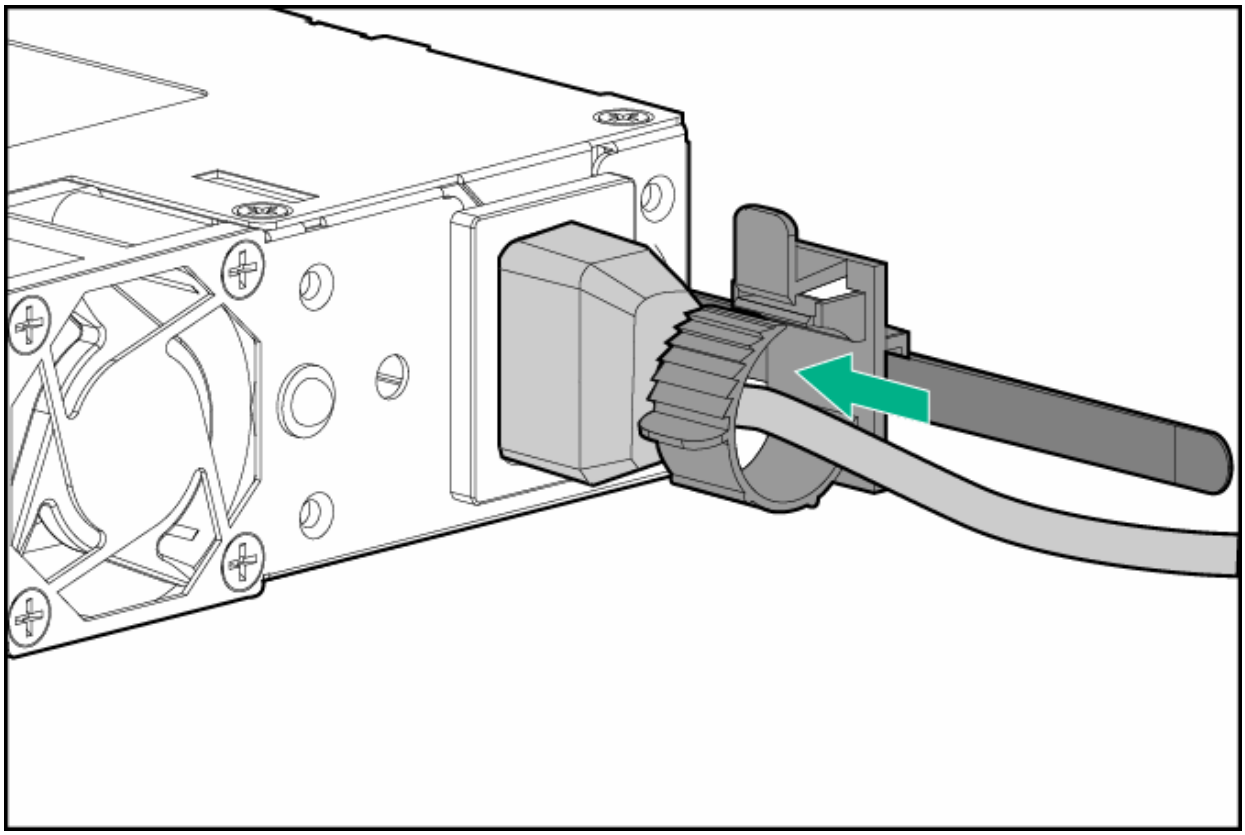

6. To secure the power cords and other rear panel cables to the rack rail, use the hook-and-loop strap.
7. Connect each power cord to the power source.
8. Power up the server.

Remove the access panel

WARNING: To reduce the risk of personal injury from hot surfaces, allow the drives and the internal system components to cool before touching them.

CAUTION: To prevent damage to electrical components, take the appropriate anti-static precautions before beginning any installation, removal, or replacement procedure. Improper grounding can cause electrostatic discharge.

CAUTION:

Do not operate the server for long periods with the access panel open or removed. Operating the server in this manner results in improper airflow and improper cooling that can lead to thermal damage.

Prerequisites

Before you perform this procedure, make sure that you have a T-15 Torx screwdriver available.

Procedure

1. If installed, remove the front bezel.
2. Power down the server.
3. Remove all power:
   a. Disconnect each power cord from the power source.
   b. Disconnect each power cord from the server.
4. Disconnect all peripheral cables from the server.
5. Remove the server from the rack.
6. Remove the access panel:

a. If necessary, unlock the access panel latch.

b. Press the release button.

c. Pull up the latch to disengage the access panel from the chassis.

d. Lift the rear side of the access panel to remove the panel from the chassis.

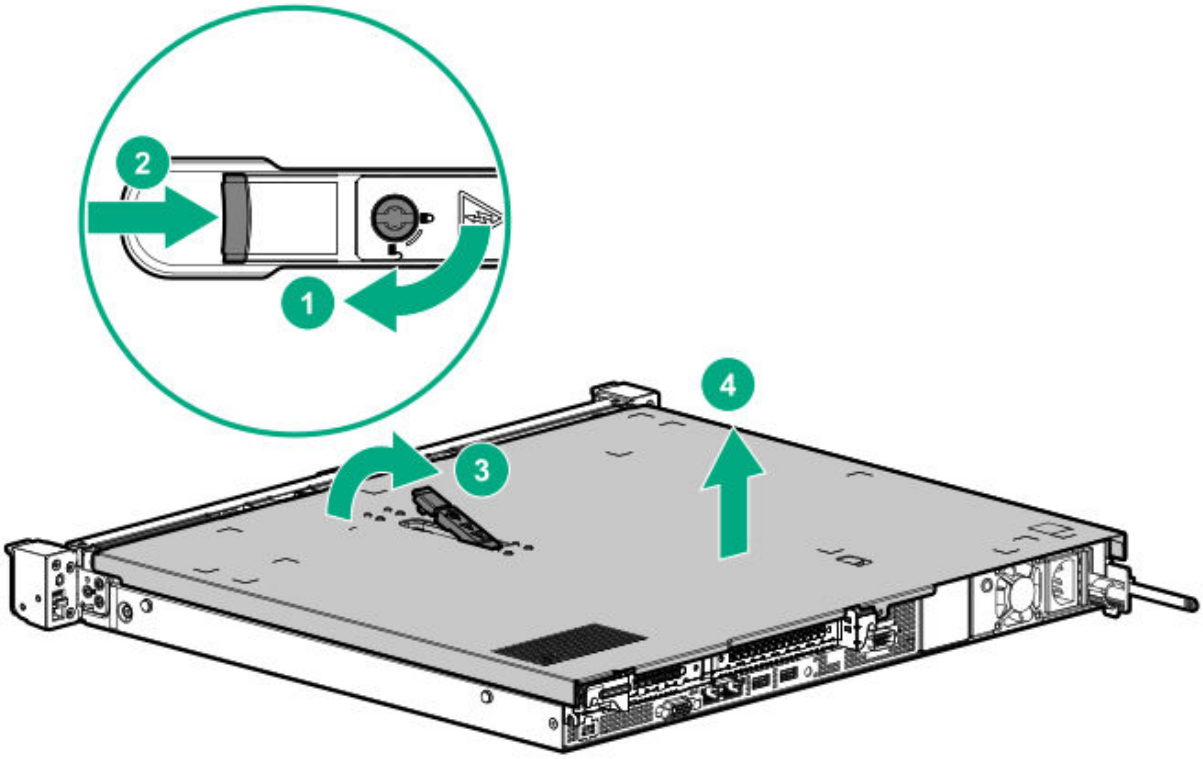

Install the access panel

Prerequisites

Before you perform this procedure, make sure that you have a T-15 Torx screwdriver available.

Procedure

1. With access panel latch open, insert the guide pin on the chassis through the hole on the access panel latch.
2. Close the access panel latch.

The access panel slides to a closed position.

3. Tighten the access panel latch screw.

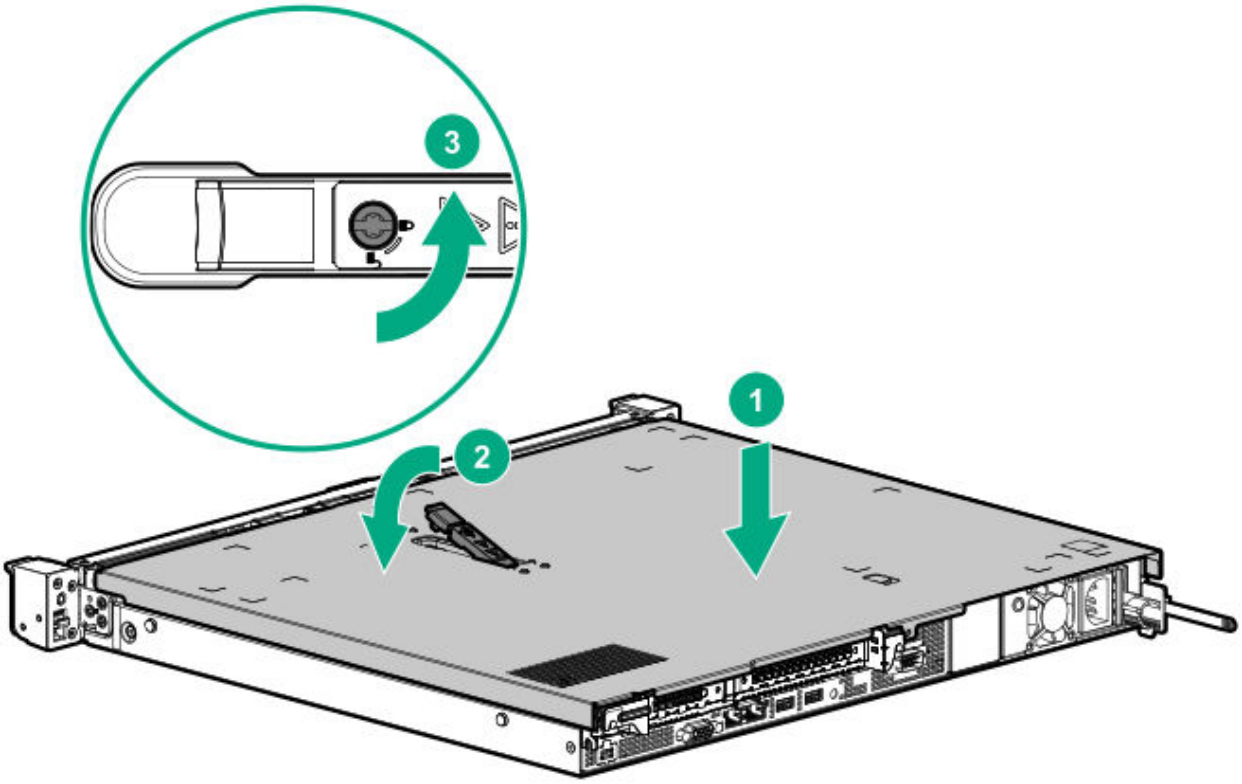

Remove the riser cage

CAUTION:

To prevent damage to the server or expansion boards, power down the server, and disconnect all power cords before removing or installing the riser cage.

Procedure

1. If installed, remove the front bezel.
2. Power down the server.
3. Remove all power:

a. Disconnect each power cord from the power source.

b. Disconnect each power cord from the server.

4. Disconnect all peripheral cables from the server.
5. Remove the server from the rack.
6. Remove the access panel.
7. If installed, disconnect all cables connected to existing expansion boards.
8. Remove the riser cage.

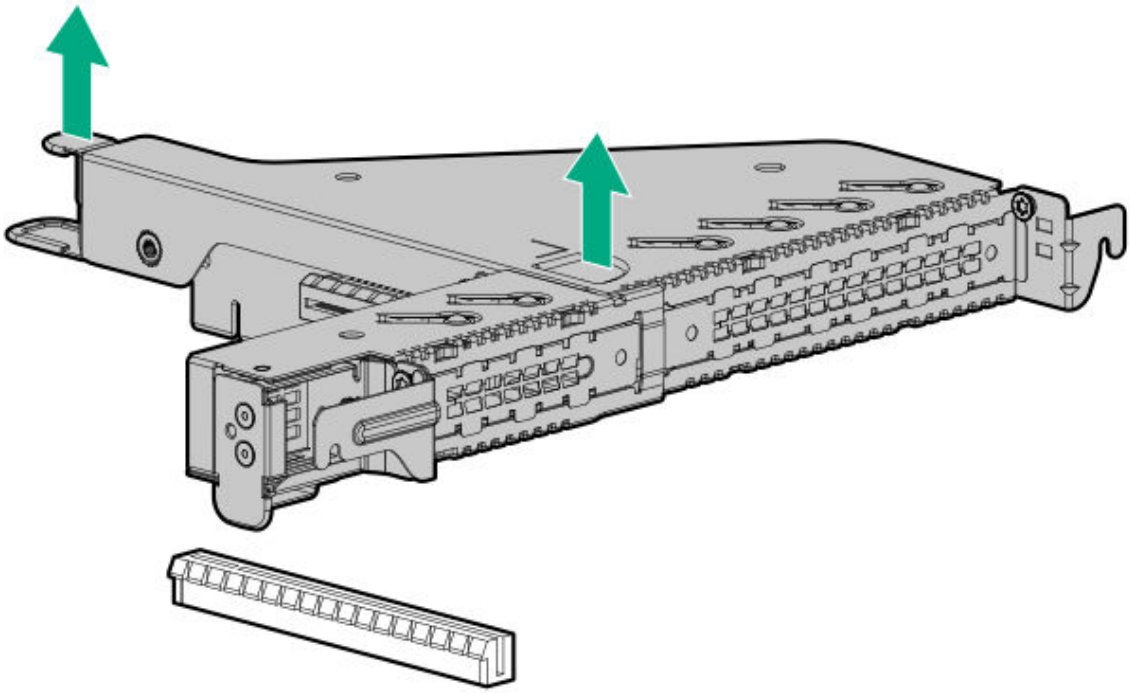

Install the riser cage

CAUTION:

To prevent damage to the server or expansion boards, power down the server, and disconnect all power cords before removing or installing the riser cage.

Procedure

1. Connect all necessary internal cabling to the expansion board.
2. Install the riser cage. Make sure that the riser board is firmly seated in its system board connector.

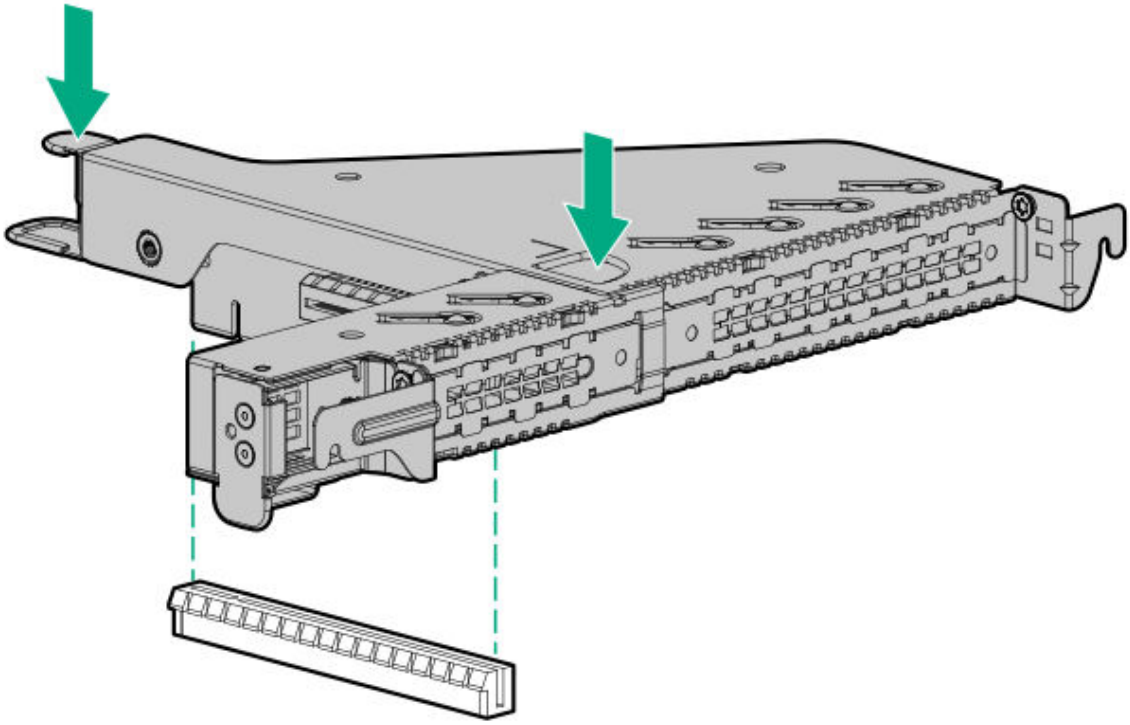

3. Install the access panel.
4. Install the server into the rack.
5. Connect all peripheral cables to the server.
6. Connect the power cords:
    a. Connect each power cord to the server.
    b. Connect each power cord to the power source.
7. Power up the server.
8. If removed, install the front bezel.

Setup

Initial server installation

Depending on the technical expertise of the user and the complexity of the product, for the initial server installation, the user can choose to:

- Order the HPE Installation Service.
- Perform the initial server setup procedure.

HPE Installation Service

HPE Installation Service provides basic installation of Hewlett Packard Enterprise branded equipment, software products, as well as HPE-supported products from other vendors that are sold by HPE or by HPE authorized resellers. The Installation Service is part of a suite of HPE deployment services that are designed to give users the peace of mind that comes from knowing that their HPE and HPE-supported products have been installed by an HPE specialist.

The HPE Installation Service provides the following benefits:

- Installation by an HPE authorized technical specialist.
- Verification prior to installation that all service prerequisites are met.
- Delivery of the service at a mutually scheduled time convenient to your organization.
- Allows your IT resources to stay focused on their core tasks and priorities.
- Full coverage during the warranty period for products that require installation by an HPE authorized technical specialist.

For more information on the features, limitations, provisions, and ordering information of the HPE Installation Service, see this Hewlett Packard Enterprise website:

https://www.hpe.com/support/installation-service

Setting up the server

Prerequisites

Before setting up the server:

- Download the latest SPP:
  http://www.hpe.com/servers/spp/download

  Support validation required
- Verify that your OS or virtualization software is supported:
  http://www.hpe.com/info/ossupport
- Obtain the storage driver if needed:
  - Download it from the HPE Support Center website:

    http://www.hpe.com/support/hpesc
  - Extract it from the SPP.
- Read the HPE UEFI requirements for ProLiant servers on the HPE website:
  http://www.hpe.com/support/Gen10UEFI

  If the UEFI requirements are not met, you might experience boot failures or other errors when installing the operating system.
- Read the operational requirements for the server:
  Operational requirements
- Read the safety and compliance information on the HPE website:
  http://www.hpe.com/support/safety-compliance-enterpriseproducts
- Read the rack warnings and cautions:

  Rack warnings and cautions
- Read the server warnings and cautions:

  Server warnings and cautions

Procedure

Unbox the server

1. Unbox the server and verify the contents:
   - Server
   - Power cord
   - Rack-mounting hardware (optional)
   - Documentation

   The server does not ship with OS media. All system software and firmware is preloaded on the server.

Install the hardware options

2. (Optional) Install the hardware options. For installation instructions, see Hardware options installation.
3. Install the server into the rack.
4. Decide how to manage the server:
   - Locally: Use a KVM switch or connect a keyboard, monitor, and mouse.
   - Remotely: Connect to the iLO web interface and run a remote console:
     a. Verify the following:
        - iLO is licensed to use the remote console feature.
          If iLO is not licensed, visit the HPE website:

          http://www.hpe.com/info/ilo
        - The iLO port is connected to a secure network.
     b. Using a browser, navigate to the iLO web interface, and then log in. The web interface can be accessed by entering the iLO hostname or IP address in the following format:
        ```
        https://<iLO hostname or IP address>
        ```

        

        NOTE:

        - The iLO hostname is located on the serial number/iLO information label located on the top of the chassis.
        - If a DHCP server assigns the IP address, the IP address appears on the boot screen.
        - If assigned, use the static IP address.
        - The default login credentials are located on the serial number/iLO information pull tab.

     c. In the navigation pane, click **Remote Console & Media**, and then launch a remote console.

Power on the server

5. Press the Power On/Standby button. For remote management, use the iLO virtual power button.
6. Using the SPP, update the following:
   - System ROM
   - Storage controller
   - Network adapters

- Intelligent Provisioning

Set up the storage

7. Set up the storage. Do one of the following:
   - To configure the server to boot from a SAN, see the following guide: **https://www.hpe.com/info/boot-from-san-config-guide**
   - If an HPE Smart Array SR controller is installed, use the HPE Smart Storage Administrator to create arrays:
     a. From the boot screen, press **F10** to run Intelligent Provisioning.
     b. From Intelligent Provisioning, run HPE Smart Storage Administrator.
   - If no controller option is installed, do one of the following:
     - AHCI is enabled by default. You can deploy an OS or virtualization software.
     - Disable AHCI, enable software RAID, and then create an array:
       a. From the boot screen, press **F9** to run UEFI System Utilities.
       b. From the UEFI System Utilities screen, select **System Configurations > BIOS/Platform Configuration (RBSU) > Storage Options > SATA Controller Options > Embedded SATA Configuration > Smart Array SW RAID Support**.
       c. Enable **Smart Array SW RAID Support**.
       d. Save the configuration and reboot the server.
       e. Create an array:
          i. From the boot screen, press **F9** to run UEFI System Utilities.
          ii. From the UEFI System Utilities screen, select **System Configuration > Embedded Storage: HPE Smart Storage S100i SR Gen10 > Array Configuration > Create Array**.

Deploy an OS or virtualization software

8. Deploy an OS or virtualization software. Do one of the following:
   - Press **F10** at the POST screen.

     For Intelligent Provisioning 3.30 and later, you are prompted to select whether you want to enter the Intelligent Provisioning or HPE Rapid Setup Software mode. After you have selected a mode, you must reprovision the server to change the mode that launches when you boot to **F10**.
   - Manually deploy an OS:
     a. Insert the installation media.

For remote management, click **Virtual Drives** in the iLO remote console to mount images, drivers, or files to a virtual folder. If a storage driver is required to install the OS, use the virtual folder to store the driver.

b. Press **F11** at boot screen to select the boot device.

c. After the OS installed, update the drivers.

Register the server

9. To experience quick service and efficient support, register the server at the HPE website:

   https://myenterpriselicense.hpe.com

Operational requirements

Space and airflow requirements

To allow for servicing and adequate airflow, observe the following space and airflow requirements when deciding where to install a rack:

- Leave a minimum clearance of 63.5 cm (25 in) in front of the rack.
- Leave a minimum clearance of 76.2 cm (30 in) behind the rack.
- Leave a minimum clearance of 121.9 cm (48 in) from the back of the rack to the back of another rack or row of racks.

Hewlett Packard Enterprise servers draw in cool air through the front door and expel warm air through the rear door. Therefore, the front and rear rack doors must be adequately ventilated to allow ambient room air to enter the cabinet, and the rear door must be adequately ventilated to allow the warm air to escape from the cabinet.

CAUTION: To prevent improper cooling and damage to the equipment, do not block the ventilation openings.

When vertical space in the rack is not filled by a server or rack component, the gaps between the components cause changes in airflow through the rack and across the servers. Cover all gaps with blanking panels to maintain proper airflow.

CAUTION: Always use blanking panels to fill empty vertical spaces in the rack. This arrangement ensures proper airflow. Using a rack without blanking panels results in improper cooling that can lead to thermal damage.

The 9000 and 10000 Series Racks provide proper server cooling from flow-through perforations in the front and rear doors that provide 64 percent open area for ventilation.

CAUTION: When using a Compaq branded 7000 series rack, install the high airflow rack door insert (PN 327281-B21 for 42U rack, PN 157847-B21 for 22U rack) to provide proper front-to-back airflow and cooling.

CAUTION:

If a third-party rack is used, observe the following additional requirements to ensure adequate airflow and to prevent damage to the equipment:

- Front and rear doors—If the 42U rack includes closing front and rear doors, you must allow 5,350 sq cm (830 sq in) of holes evenly distributed from top to bottom to permit adequate airflow (equivalent to the required 64 percent open area for ventilation).
- Side—The clearance between the installed rack component and the side panels of the rack must be a minimum of 7 cm (2.75 in).

Temperature requirements

To ensure continued safe and reliable equipment operation, install or position the system in a well-ventilated, climate-controlled environment.

The maximum recommended ambient operating temperature (TMRA) for most server products is 35°C (95°F). The temperature in the room where the rack is located must not exceed 35°C (95°F).

CAUTION: To reduce the risk of damage to the equipment when installing third-party options:

- Do not permit optional equipment to impede airflow around the server or to increase the internal rack temperature beyond the maximum allowable limits.
- Do not exceed the manufacturer's TMRA.

Power requirements

Installation of this equipment must comply with local and regional electrical regulations governing the installation of information technology equipment by licensed electricians. This equipment is designed to operate in installations covered by NFPA 70, 1999 Edition (National Electric Code) and NFPA-75, 1992 (code for Protection of Electronic Computer/Data Processing Equipment). For electrical power ratings on options, refer to the product rating label or the user documentation supplied with that option.

WARNING: To reduce the risk of personal injury, fire, or damage to the equipment, do not overload the AC supply branch circuit that provides power to the rack. Consult the electrical authority having jurisdiction over wiring and installation requirements of your facility.

CAUTION: Protect the server from power fluctuations and temporary interruptions with a regulating uninterruptible power supply. This device protects the hardware from damage caused by power surges and voltage spikes and keeps the system in operation during a power failure.

Electrical grounding requirements

The server must be grounded properly for proper operation and safety. In the United States, you must install the equipment in accordance with NFPA 70, National Electric Code Article 250, as well as any local and regional building codes. In Canada, you must install the equipment in accordance with Canadian Standards Association, CSA C22.1, Canadian Electrical Code. In all other countries, you must install the equipment in accordance with any regional or national electrical wiring codes, such as the International Electrotechnical Commission (IEC) Code 364, parts 1 through 7. Furthermore, you must be sure that all power distribution devices used in the installation, such as branch wiring and receptacles, are listed or certified grounding-type devices.

Because of the high ground-leakage currents associated with multiple servers connected to the same power source, Hewlett Packard Enterprise recommends the use of a PDU that is either permanently wired to the building's branch circuit or includes a nondetachable cord that is wired to an industrial-style plug. NEMA locking-style plugs or those complying with IEC 60309 are considered suitable for this purpose. Using common power outlet strips for the server is not recommended.

Rack warnings and cautions

WARNING:
To reduce the risk of personal injury or equipment damage when unloading a rack:

- At least two people are needed to safely unload the rack from the pallet. An empty 42U rack can weigh as much as 115 kg (253 lb), can stand more than 2.1 m (7 ft) tall, and might become unstable when being moved on its casters.
- Never stand in front of the rack when it is rolling down the ramp from the pallet. Always handle the rack from both sides.

WARNING:

When all components are removed, the server weighs 6 kg (13.22 lb). When all components are installed, the server can weigh up to 9.46 kg (20.85 lb).

Before configuring your rack solution, be sure to check the rack manufacturer weight limits and specifications. Failure to do so can result in physical injury or damage to the equipment and the facility.

WARNING:
To reduce the risk of personal injury or damage to the equipment, be sure that:

- The rack has anti-tip measures in place. Such measures include floor-bolting, anti-tip feet, ballast, or a combination as specified by the rack manufacturer and applicable codes.
- The leveling jacks (feet) are extended to the floor.
- The full weight of the rack rests on the leveling jacks (feet).
- The stabilizing feet are attached to the rack if it is a single-rack installation.
- The racks are coupled together in multiple rack installations.

WARNING:
The chassis is heavy. To reduce the risk of personal injury or damage to the equipment, do the following:

- Observe local occupational health and safety requirements and guidelines for manual material handling.
- Get help to lift and stabilize the product during installation or removal, especially when the product is not fastened to the rails. The chassis weighs more than 6 kg (13.22 lb), so at least two people must lift the chassis into the rack together. An additional person may be required to help align the chassis if the chassis is installed higher than chest level.
- Use caution when installing the chassis into or removing the chassis from the rack.
- Adequately stabilized the chassis before extending a component outside the rack. Extend only one component at a time. The rack might become unstable if more than one component is extended.
- Do not stack anything on top of rail-mounted component or use it as a work surface when extended from the rack.

WARNING:
The rack rails form only a shelf for the chassis to rest on. The chassis is not attached to the rails by any other means. Slipping and falling chassis will cause bodily injury or damage the chassis, so use extreme care when pulling the chassis out from the rack. Hewlett Packard Enterprise is not responsible for any injury or damage caused by the mishandling of the chassis.

CAUTION:
Before installing the server into a rack , be sure to properly scope the limitations of the rack . Before proceeding with the installation, consider the following:

- You must fully understand the static and dynamic load carrying capacity of the rack and be sure that it can accommodate the maximum weight of the server.
- Be sure sufficient clearance exists for cabling, installation and removal of the server, and movement of the rack doors.

CAUTION:

Always plan the rack installation so that the heaviest item is on the bottom of the rack. Install the heaviest item first, and continue to populate the rack from the bottom to the top.

Server warnings and cautions

WARNING:

To reduce the risk of personal injury, electric shock, or damage to the equipment, disconnect the power cord to remove power from the server. Pressing the Power On/Standby button does not shut off system power completely. Portions of the power supply and some internal circuitry remain active until AC power is removed.

WARNING: To reduce the risk of personal injury from hot surfaces, allow the drives and the internal system components to cool before touching them.

WARNING:

To reduce the risk of fire or burns after removing the energy pack:

- Do not disassemble, crush, or puncture the energy pack.
- Do not short external contacts.
- Do not dispose of the energy pack in fire or water.
- Do not expose the energy pack to low air pressure as it might lead to explosion or leakage of flammable liquid or gas.
- Do not expose the energy pack to temperatures higher than 60°C (140°F).

After power is disconnected, battery voltage might still be present for 1s to 160s.

CAUTION:

Protect the server from power fluctuations and temporary interruptions with a regulating UPS. This device protects the hardware from damage caused by power surges and voltage spikes and keeps the server in operation during a power failure.

CAUTION:

To prevent damage to electrical components, properly ground the server before beginning any installation, removal, or replacement procedure. Improper grounding can cause electrostatic discharge.

CAUTION:

To avoid data loss, Hewlett Packard Enterprise recommends that you back up all server data before installing or removing a hardware option, or performing a server maintenance or troubleshooting procedure.

CAUTION: Do not operate the server for long periods with the access panel open or removed. Operating the server in this manner results in improper airflow and improper cooling that can lead to thermal damage.

Electrostatic discharge

Be aware of the precautions you must follow when setting up the system or handling components. A discharge of static electricity from a finger or other conductor may damage system boards or other static-sensitive devices. This type of damage may reduce the life expectancy of the system or component.

To prevent electrostatic damage:

- Avoid hand contact by transporting and storing products in static-safe containers.
- Keep electrostatic-sensitive parts in their containers until they arrive at static-free workstations.
- Place parts on a grounded surface before removing them from their containers.
- Avoid touching pins, leads, or circuitry.
- Always be properly grounded when touching a static-sensitive component or assembly. Use one or more of the following methods when handling or installing electrostatic-sensitive parts:
    - Use a wrist strap connected by a ground cord to a grounded workstation or computer chassis. Wrist straps are flexible straps with a minimum of 1 megohm ±10 percent resistance in the ground cords. To provide proper ground, wear the strap snug against the skin.
    - Use heel straps, toe straps, or boot straps at standing workstations. Wear the straps on both feet when standing on conductive floors or dissipating floor mats.
    - Use conductive field service tools.

- Use a portable field service kit with a folding static-dissipating work mat.

If you do not have any of the suggested equipment for proper grounding, have an authorized reseller install the part.

For more information on static electricity or assistance with product installation, contact an authorized reseller.

POST screen options

When the server is powered on, the POST screen is displayed. The following options are displayed:

- System Utilities (**F9**)
  Use this option to configure the system BIOS.
- Intelligent Provisioning (**F10**)
  Use this option to deploy an operating system or configure storage.
- Boot menu (**F11**)
  Use this option to make a one-time boot selection.
- Network boot (**F12**)
  Use this option to boot the server from the network.

Hardware options installation

This chapter provides instructions for installing supported hardware options.

To ensure proper server deployment and operation, Hewlett Packard Enterprise recommends installing only HPE-validated hardware options. To see the list of validated options for this server, see the product QuickSpecs on the HPE ProLiant DL20 Gen10 Server website:

https://www.hpe.com/servers/dl20-gen10

To view the warranty for your server and supported options, see Warranty information.

Introduction

Install any hardware options before initializing the server. If multiple options are being installed, read the installation instructions for all the hardware options to identify similar steps and streamline the installation process.

WARNING: To reduce the risk of personal injury from hot surfaces, allow the drives and the internal system components to cool before touching them.

CAUTION: To prevent damage to electrical components, properly ground the server before beginning any installation procedure. Improper grounding can cause electrostatic discharge.

Rack rail option

Installing the rack rail option

The rack rails can be installed in round-hole, square-hole, or threaded-hole racks. These rails occupy 1U position on the rack.

The illustrations used in this section show an icon on the upper right corner of the image. This icon indicates the rack type for which the action illustrated in the image is valid.

Icon	Rack type
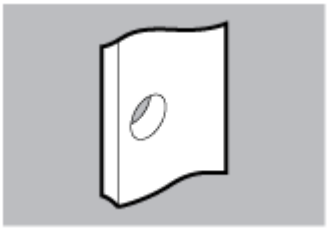	Round-hole rack
	Square-hole rack

Icon	Rack type
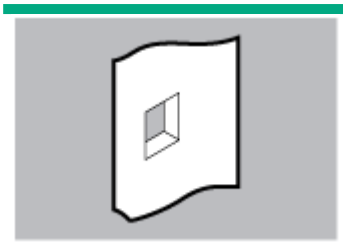	
	Threaded-hole rack
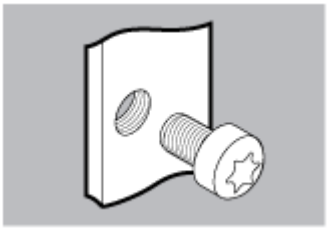	

Procedure

1. Attach the sliding rails to the server:
   a. Align the notches on the rail with the pins on the side.
   b. Slide the rail towards the rear of the server to lock it into place.

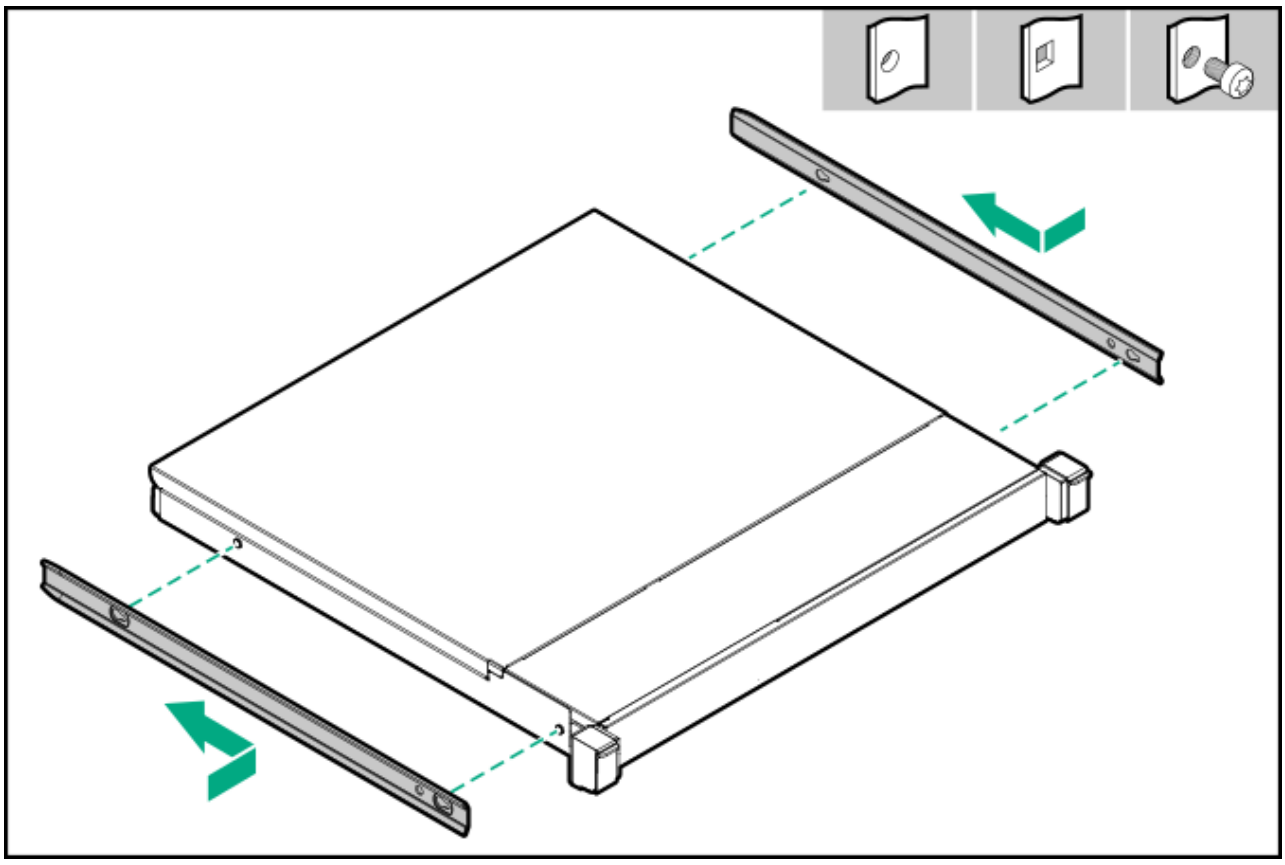

2. Locate the orientation markers on the mounting rails.

   The front end of the rails are marked **FRONT LEFT** and **FRONT RIGHT**.

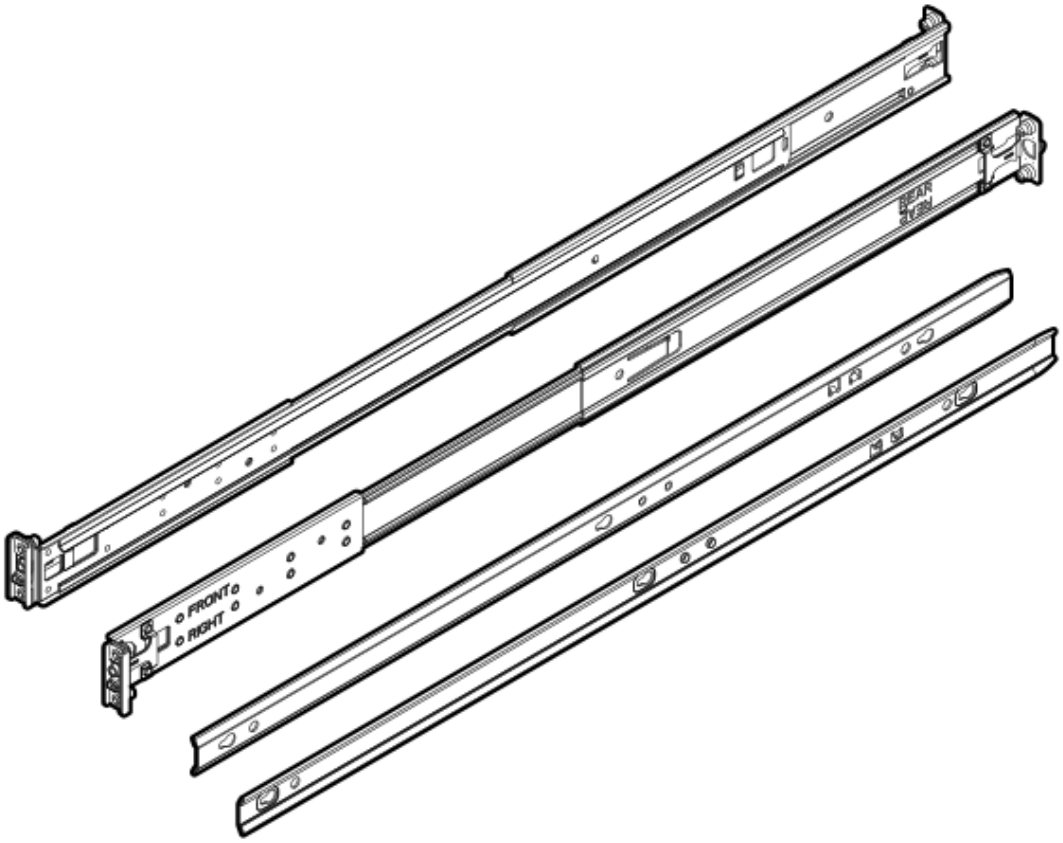

3. Remove the pins and washers from the mounting rails.

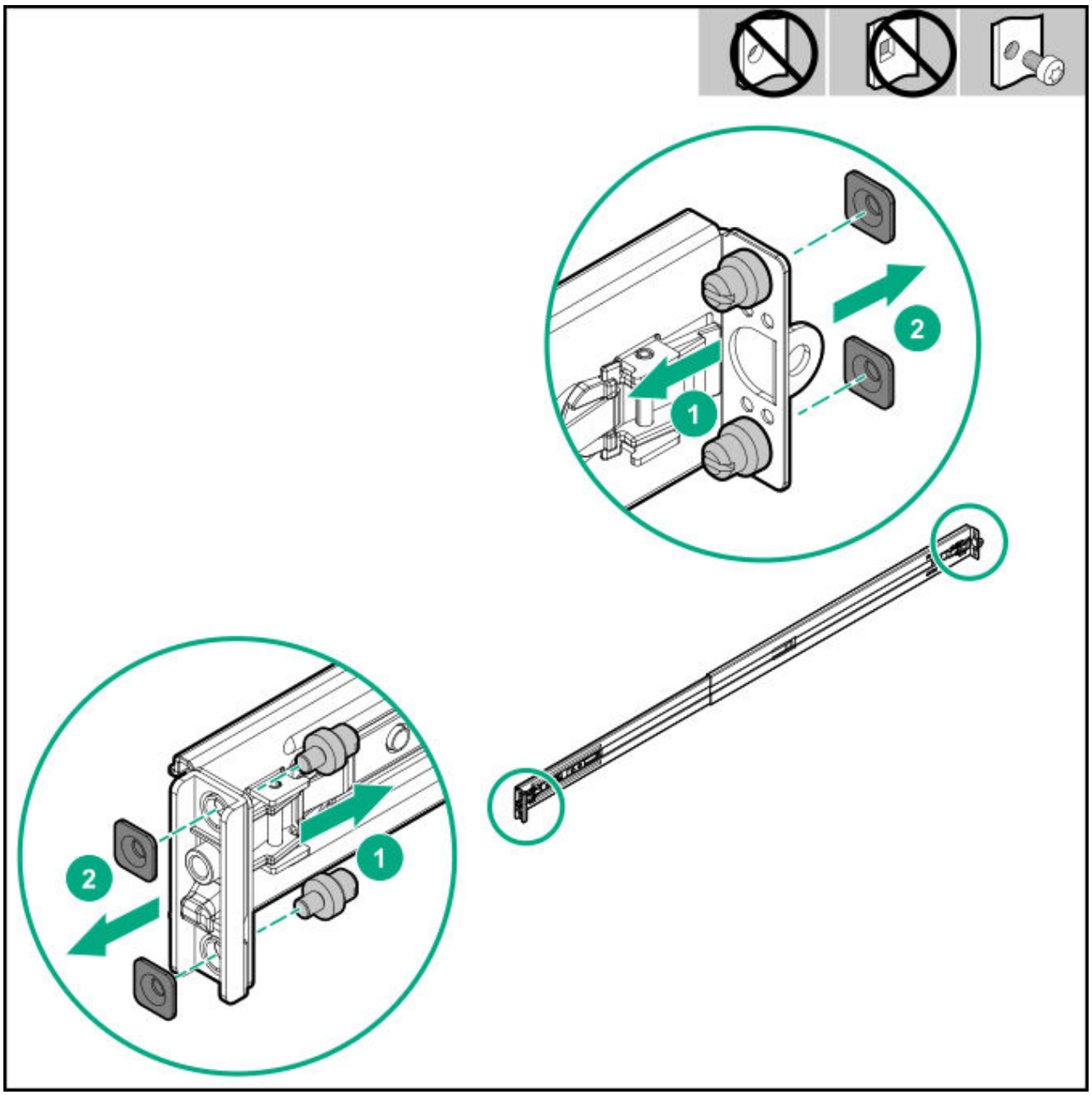

4. Fasten the mounting rails to the rack columns:
   - For round-hole or square-hole racks: Insert the rail pins into the rack column holes.

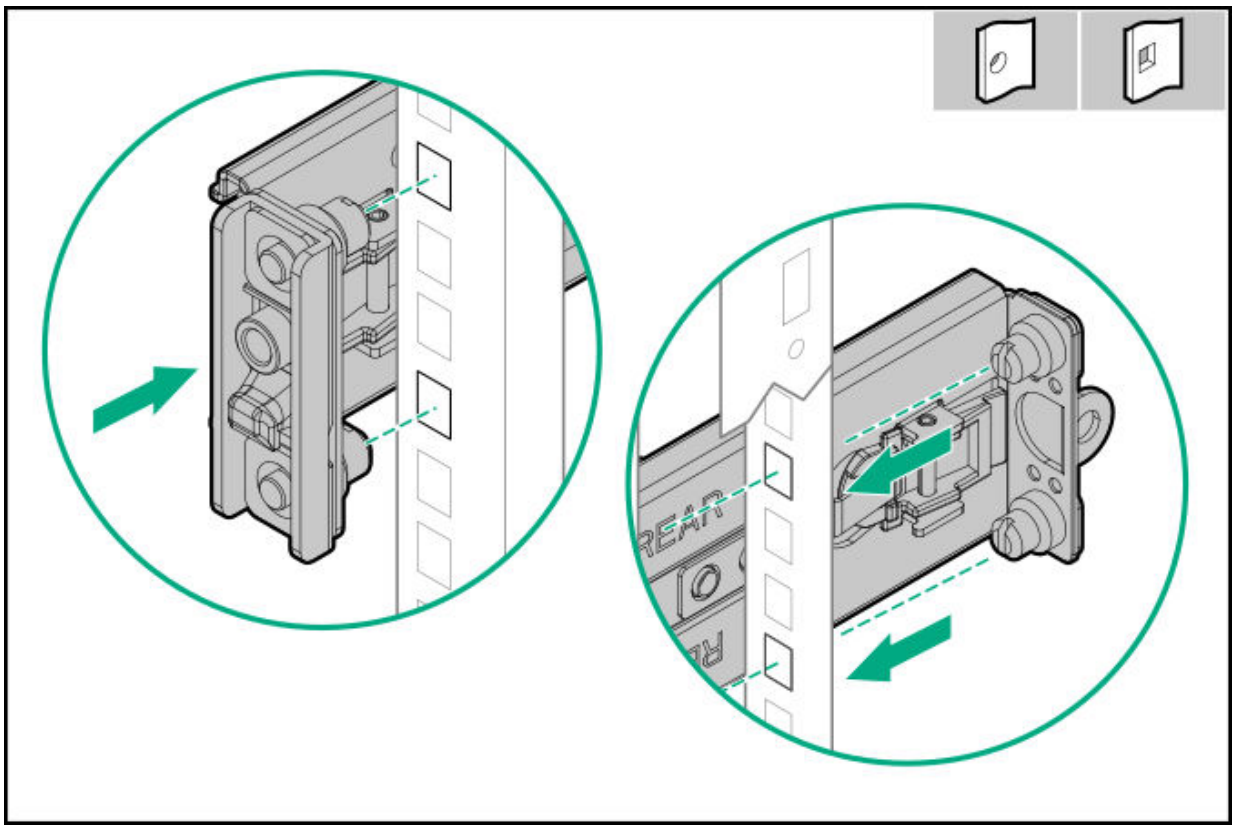

- For threaded-hole rack: Insert the rail pins into the rack column holes, and then install the mounting screws.

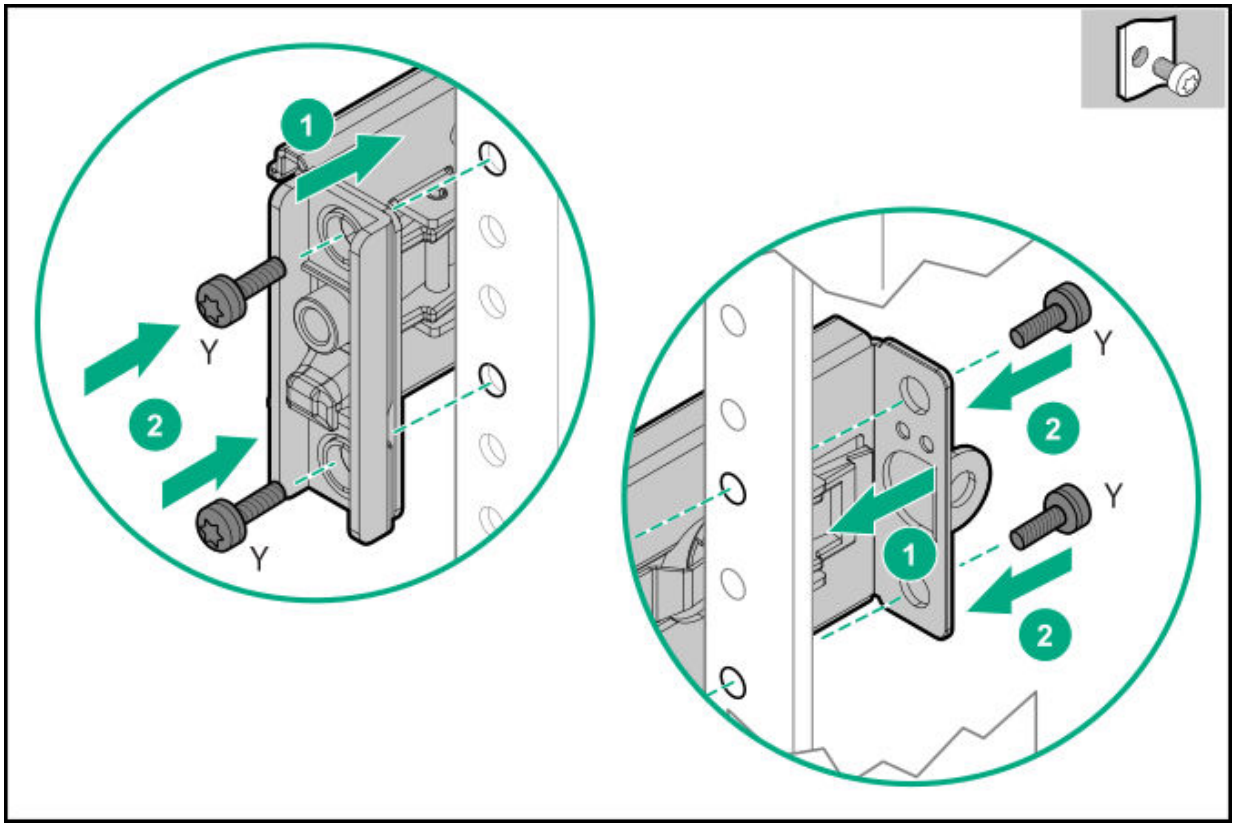

5. Install the server into the rack.
6. To secure the power cords and other rear panel cables to the rack rail, install the hook-and-loop strap.

The installation is complete.

Installing the rack rail hook-and-loop strap

The rack rail hook-and-loop strap can be installed on either the left or right rack rail. Hewlett Packard Enterprise recommends installing it on the left rack rail for better cable management.

Procedure

1. Attach the strap carabiner to the rack rail.
2. Bundle the rear panel cables together, and then wrap the strap around the cables.

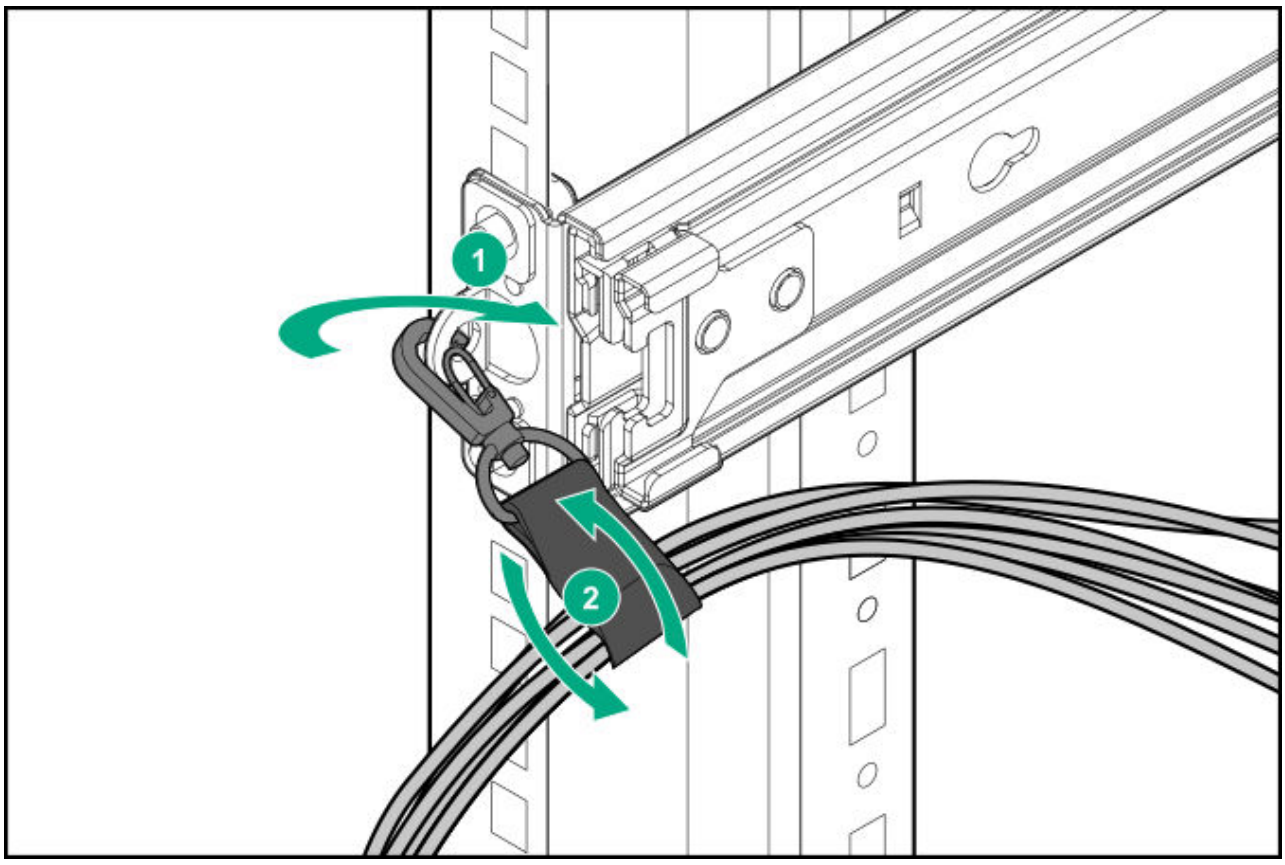

The installation is complete.

Installing the front bezel option

Procedure

1. Attach the front bezel to the latch ear.
2. Press and hold the front bezel latch.
3. Close the front bezel.

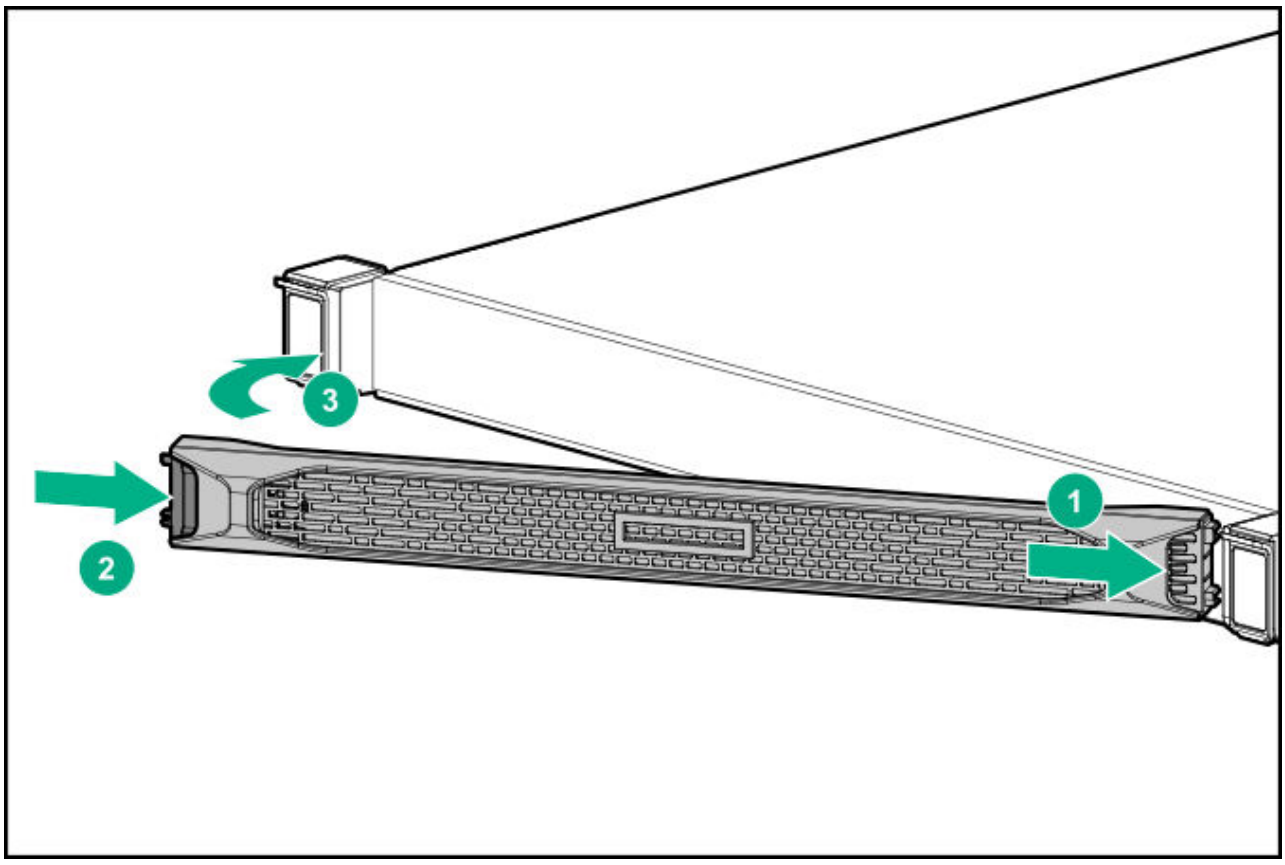

4. Install the Kensington security lock.

   For more information, see the lock documentation.

Drive options

Drive installation guidelines

Observe the following general guidelines:

- The system automatically sets all drive numbers.
- If only one drive is used, install it in the bay with the lowest drive number.
  For drive numbering, see Drive bay numbering.
- Drives with the same capacity provide the greatest storage space efficiency when grouped into the same drive array.

Drive support information

Depending on the drive cage installed, the server supports the following drive types:

- Non-hot plug LFF drives
- Hot-plug LFF drives
- Hot-plug SFF drives

The embedded HPE Smart Array S100i SR Gen10 Controller supports SATA drive installation. For SAS support, install a Smart Array Gen10 type-p or type-a controller option.

Installing an LFF non-hot-plug drive

Prerequisites

Before you perform this procedure, make sure that you have the following tools available:

- T-15 Torx screwdriver
- Phillips No. 1 screwdriver

Procedure

1. If installed, remove the front bezel.
2. Power down the server.
3. Remove all power:
   a. Disconnect each power cord from the power source.
   b. Disconnect each power cord from the server.
4. Disconnect all peripheral cables from the server.
5. Remove the server from the rack.
6. Remove the access panel.
7. Disconnect all cables from the drive cage.
8. Remove screws from the drive cage. Each drive requires four screws.

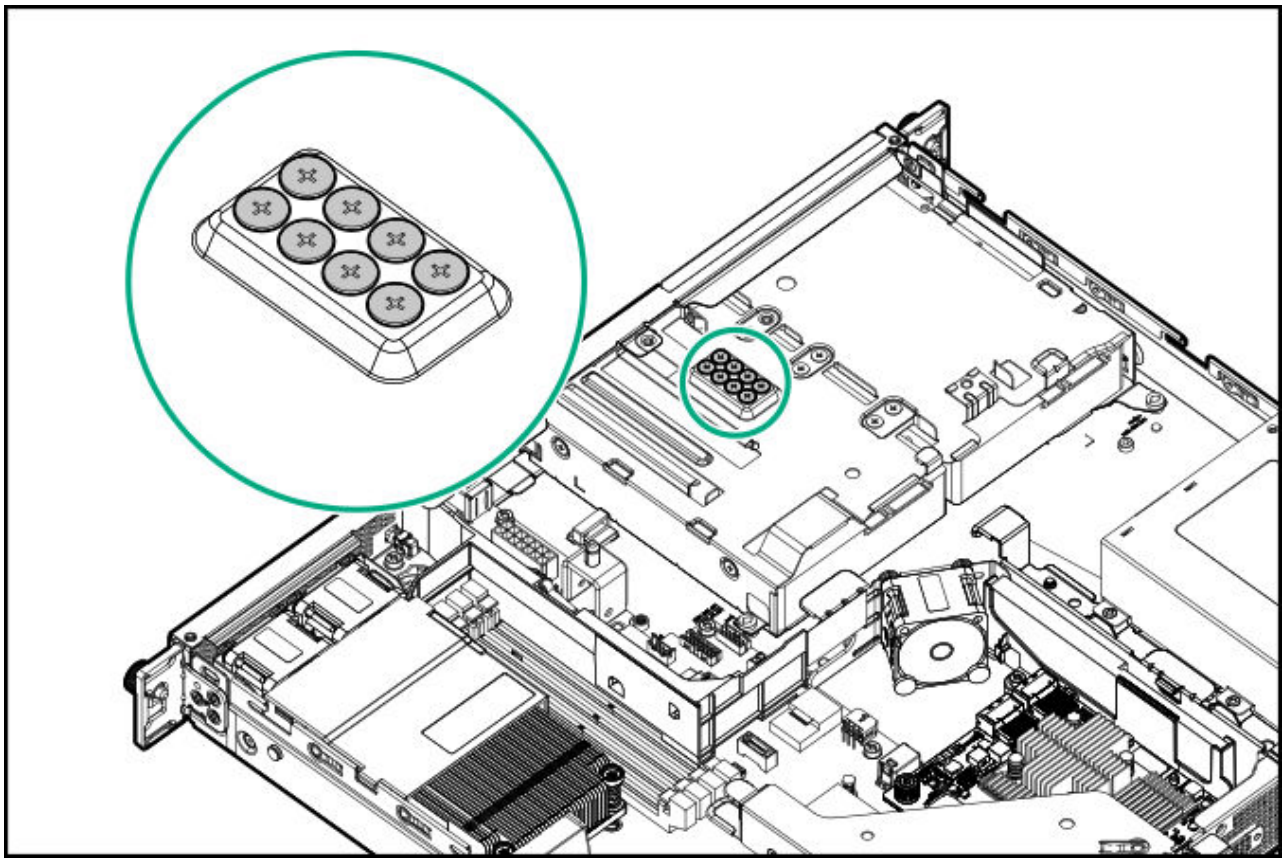

9. Remove the non-hot-plug drive cage.

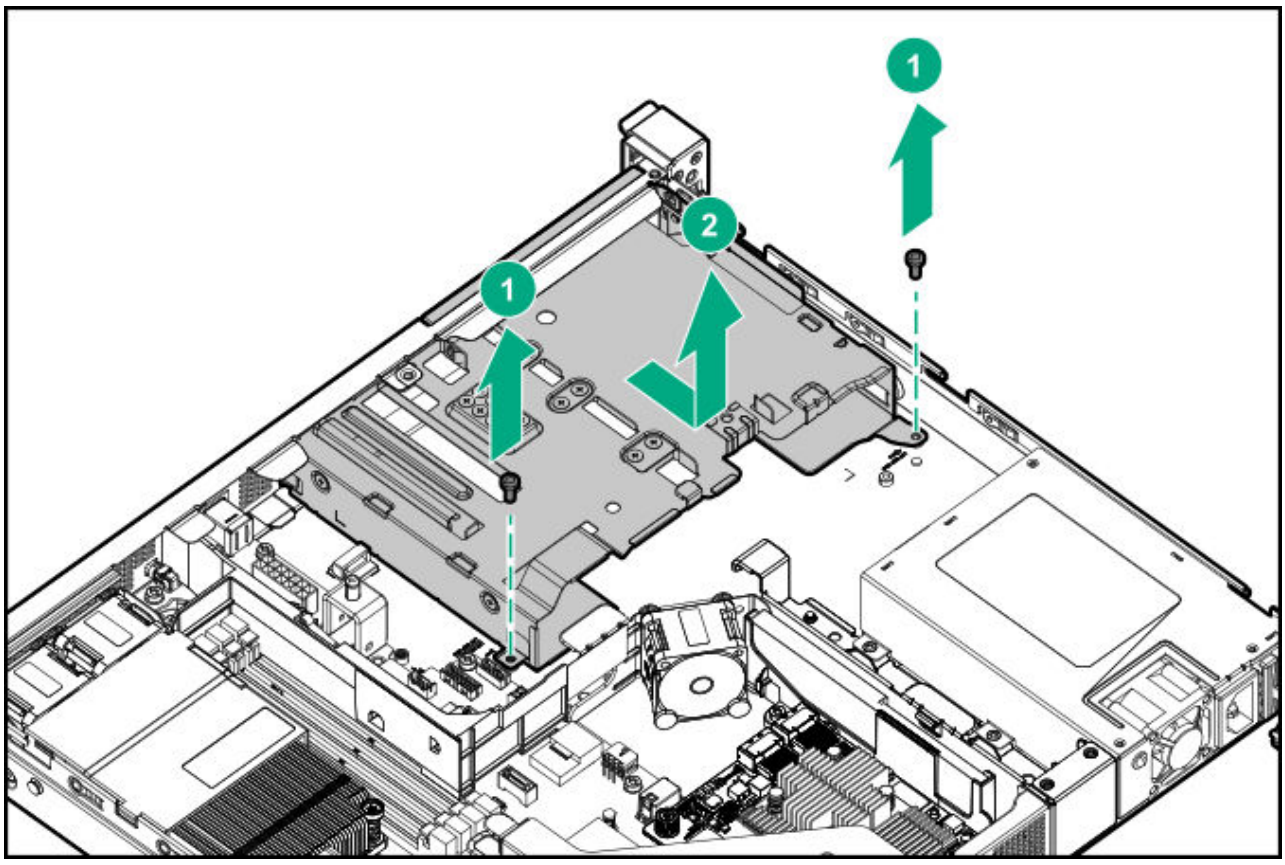

.0. Install the non-hot-plug drive.

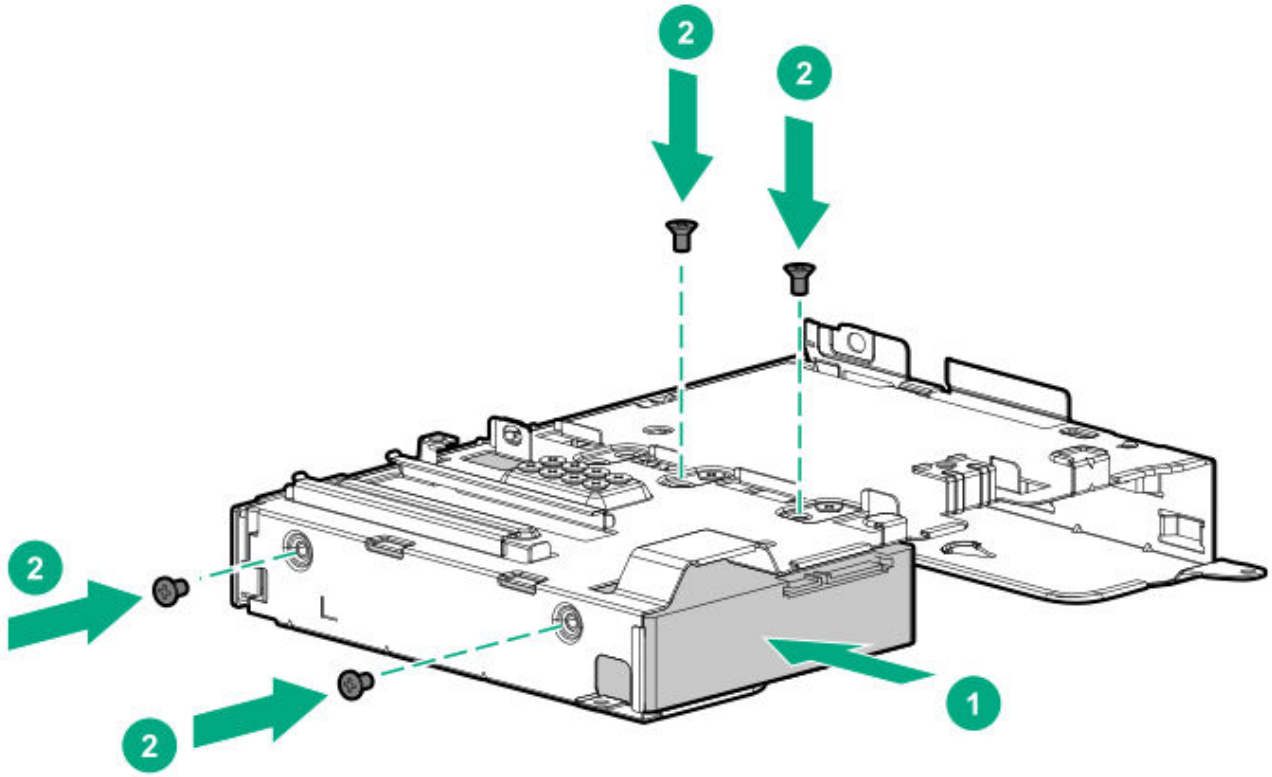

.1. Install the non-hot-plug drive cage assembly.

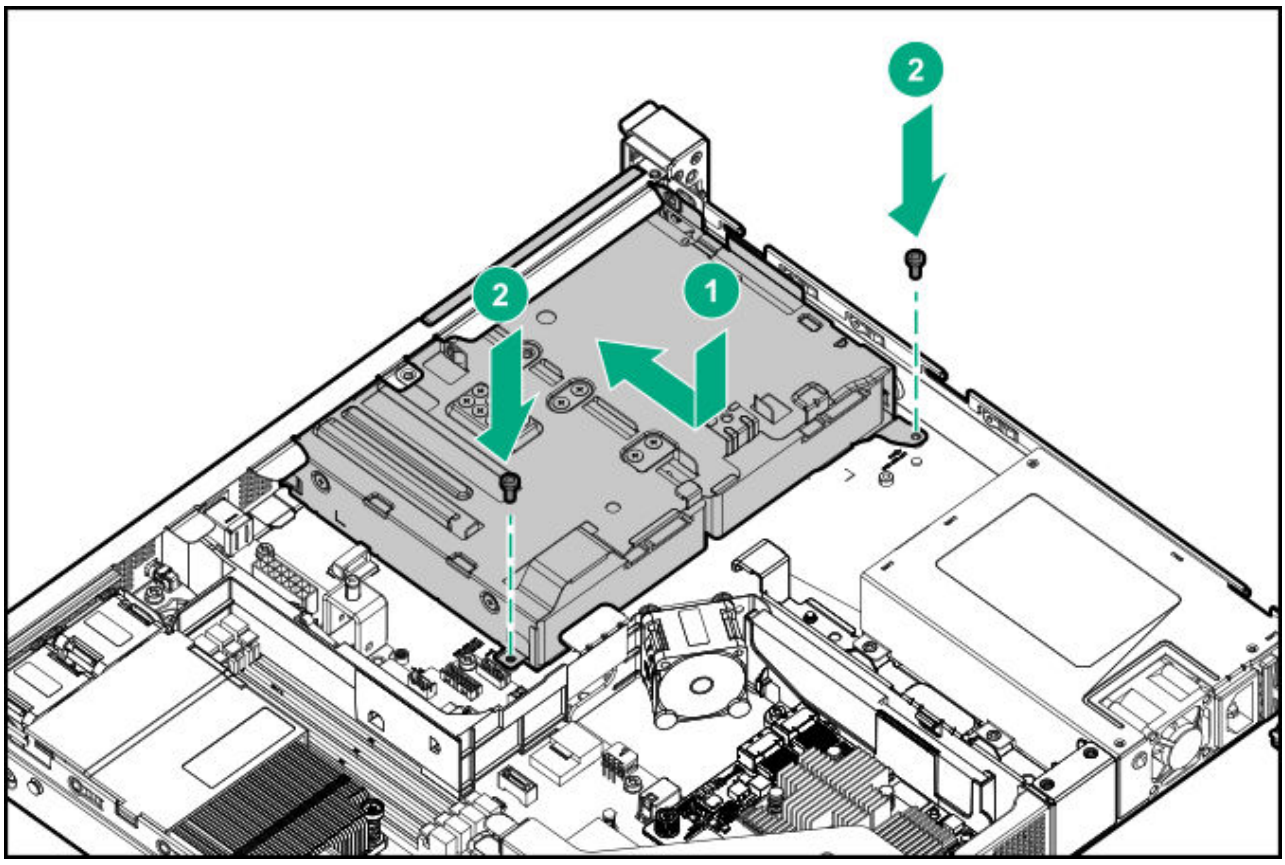

.2. Connect the drive cables.

.3. Install the access panel.

.4. Install the server into the rack.

.5. Connect all peripheral cables to the server.

.6. Connect the power cords:

   a. Connect each power cord to the server.

   b. Connect each power cord to the power source.

.7. Power up the server.

.8. If removed, install the front bezel.

The installation is complete.

To configure arrays, see the HPE Smart Array SR Gen10 Configuration Guide at the **Hewlett Packard Enterprise website**.

Installing an LFF hot-plug drive

CAUTION: To prevent improper cooling and thermal damage, do not operate the server unless all bays are populated with either a component or a blank.

Procedure

1. If installed, remove the front bezel.
2. Remove the drive blank.

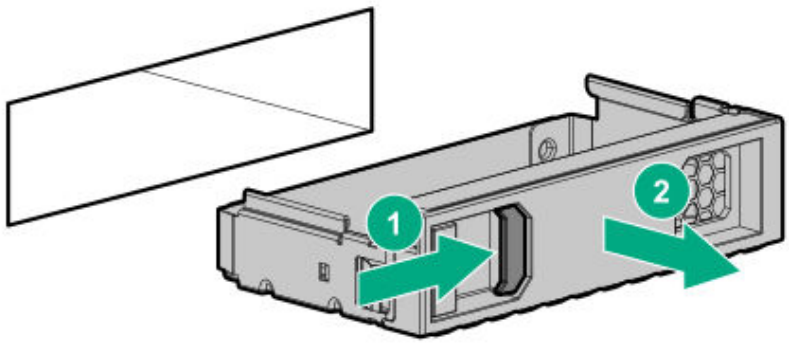

3. Prepare the drive.

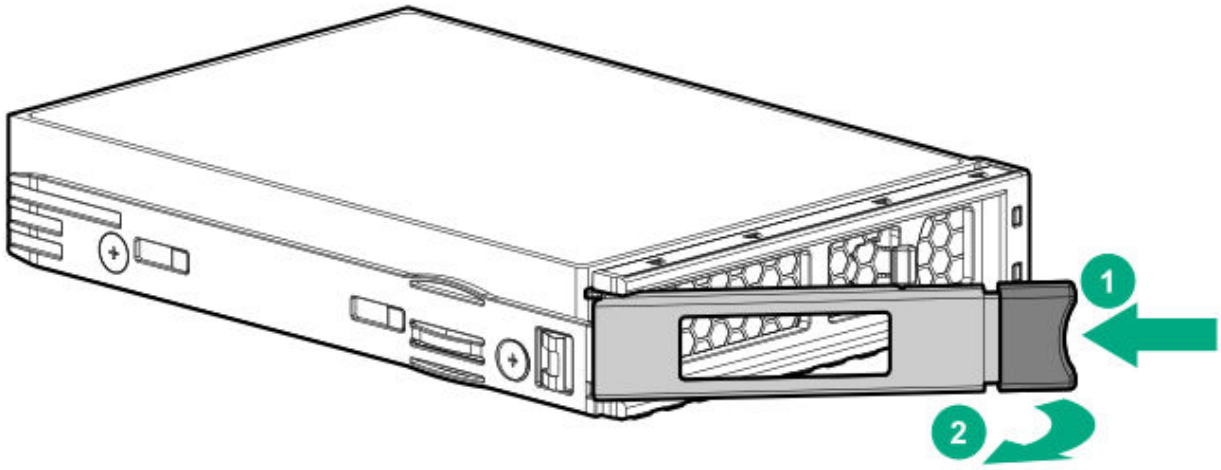

4. Install the drive.

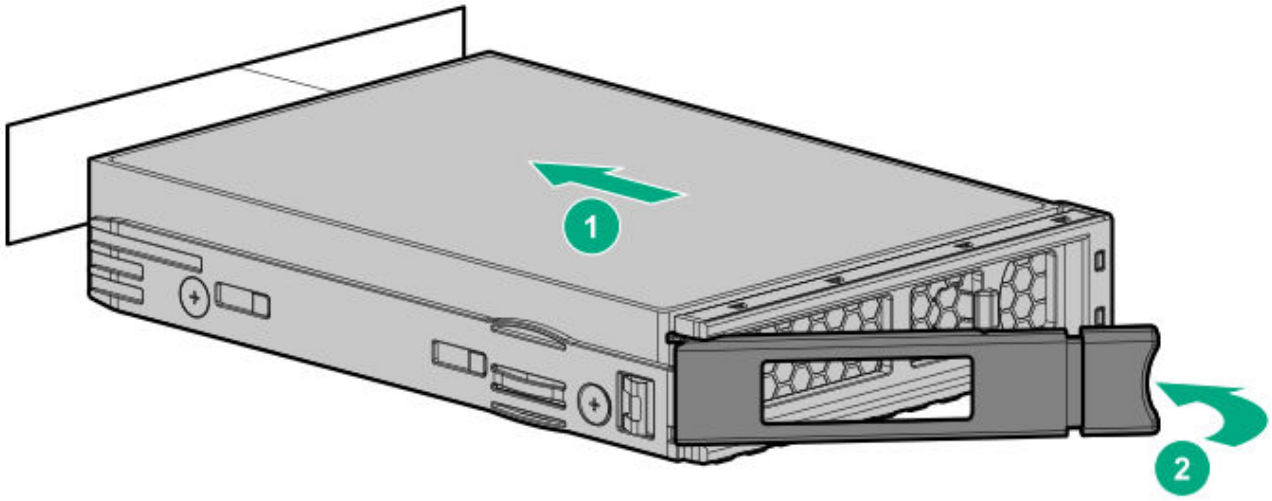

5. If removed, install the front bezel.
6. Determine the status of the drive from the drive LED definitions.

The installation is complete.

To configure arrays, see the HPE Smart Array SR Gen10 Configuration Guide at the **Hewlett Packard Enterprise website**.

Installing an SFF hot-plug drive

CAUTION: To prevent improper cooling and thermal damage, do not operate the server unless all bays are populated with either a component or a blank.

Procedure

1. If installed, remove the front bezel.
2. Remove the drive blank.

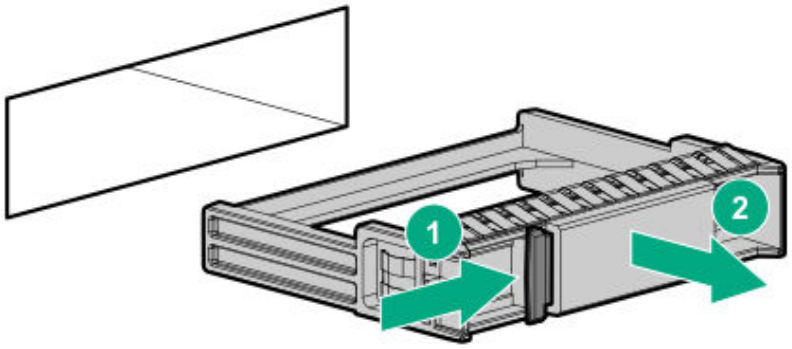

3. Prepare the drive.

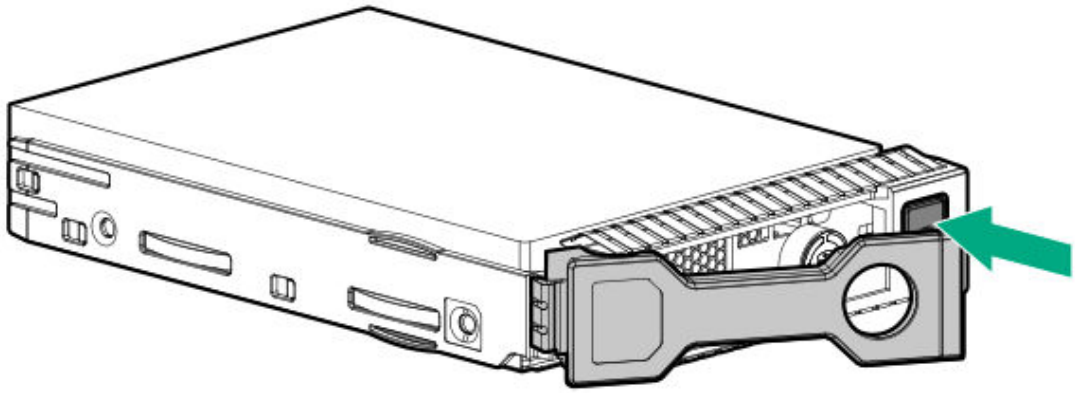

4. Install the drive.

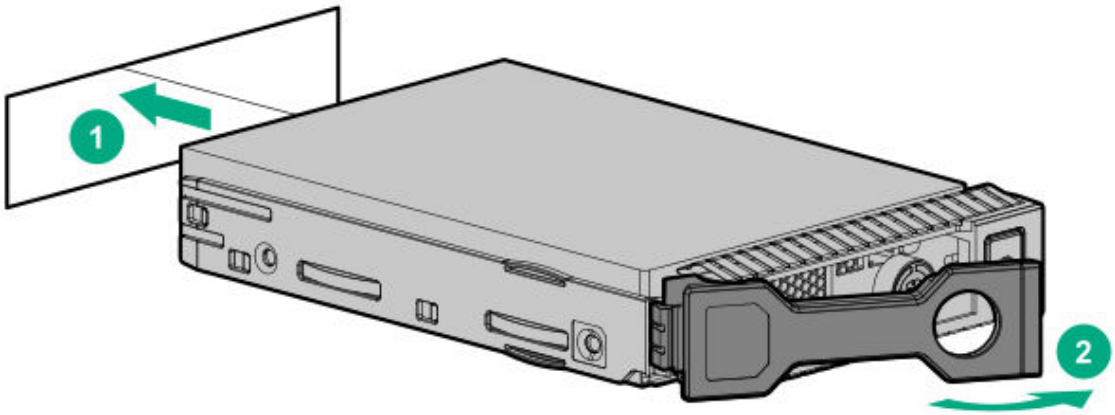

5. If removed, install the front bezel.
6. Determine the status of the drive from the drive LED definitions.

The installation is complete.

To configure arrays, see the HPE Smart Array SR Gen10 Configuration Guide at the **Hewlett Packard Enterprise website**.

Power supply options

Depending on the installed options and the regional location where the server was purchased, the server can be configured with one of the following power supplies:

- ATX 290 W Platinum Non-hot-plug Power Supply (94% efficiency)
- ATX 290 W Non-hot-plug Power Supply (92% efficiency)
- HPE 500 W Flex Slot Platinum Hot-plug Low Halogen Power Supply
- HPE 800W Flex Slot -48VDC Hot plug Low Halogen Power Supply

Hot-plug power supply calculations

For more information on the hot-plug power supply and calculators to determine server power consumption in various system configurations, see the Hewlett Packard Enterprise Power Advisor website (**https://www.hpe.com/info/poweradvisor/online**).

Power supply warnings and cautions

WARNING:
To reduce the risk of electric shock or damage to the equipment:

- Do not disable the power cord grounding plug. The grounding plug is an important safety feature.
- Plug the power cord into a grounded (earthed) electrical outlet that is easily accessible at all times.
- Unplug the power cord from the power supply to disconnect power to the equipment.
- Do not route the power cord where it can be walked on or pinched by items placed against it. Pay particular attention to the plug, electrical outlet, and the point where the cord extends from the server.

WARNING: To reduce the risk of injury from electric shock hazards, do not open power supplies. Refer all maintenance, upgrades, and servicing to qualified personnel

WARNING: To reduce the risk of personal injury from hot surfaces, allow the drives and the internal system components to cool before touching them.

CAUTION: To prevent damage to electrical components, properly ground the server before beginning any installation procedure. Improper grounding can cause electrostatic discharge.

CAUTION: Mixing different types of power supplies in the same server might:

- Limit or disable some power supply features including support for power redundancy.
- Cause the system to become unstable and might shut down.

To ensure access to all available features, all power supplies in the same server should have the same output and efficiency ratings. Verify that all power supplies have the same part number and label color.

Installing a redundant AC power supply

WARNING: To reduce the risk of personal injury from hot surfaces, allow the power supply or power supply blank to cool before touching it.

CAUTION: To prevent improper cooling and thermal damage, do not operate the server unless all bays are populated with either a component or a blank.

Procedure

1. Remove the power supply blank.

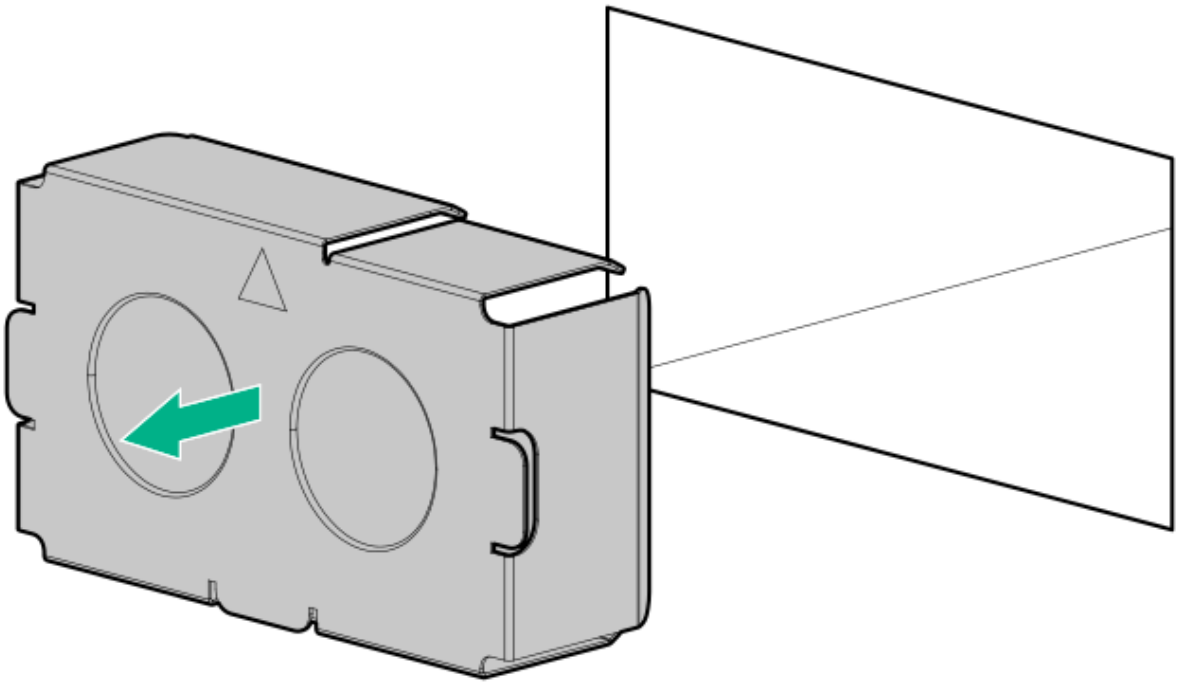

2. Slide the power supply into the bay until it clicks into place.

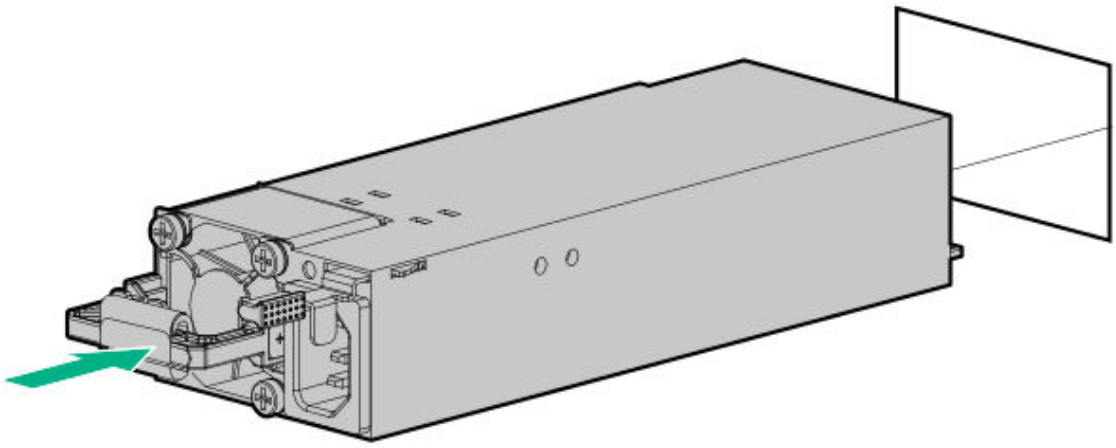

3. Connect the power cord to the power supply.
4. Secure the power cord in the strain relief strap.
5. Connect the power cord to the power source.
6. Make sure that the power supply LED is green.
7. Reboot the server if a second redundant power supply is installed in addition to the first redundant power supply.

The installation is complete.

Installing a hot-plug DC power supply

The following input power cord option might be purchased from an authorized Hewlett Packard Enterprise reseller:

J6X43A—HPE 12 AWG 48 V DC 3.0 m Power Cord

If you are not using an input power cord option, the power supply cabling should be made in consultation with a licensed electrician and be compliant with local code.

If you are replacing the factory installed ground lug, use the KST RNB5-5 crimp terminal ring or equivalent. Use an M5-0.80 x 8 screw to attach the ground lug to the power supply.

WARNING: To reduce the risk of electric shock, fire, and damage to the equipment, you must install this product in accordance with the following guidelines:

- This power supply is intended only for installation in Hewlett Packard Enterprise servers located in a restricted access location.
- This power supply is not intended for direct connection to the DC supply branch circuit. Only connect this power supply to a power distribution unit (PDU) that provides an independent overcurrent-protected output for each DC power supply. Each output overcurrent-protected device in the PDU must be suitable for interrupting fault current available from the DC power source and must be rated no more than 40A.
- The PDU output must have a shut-off switch or a circuit breaker to disconnect power for each power supply. To completely remove power from the power supply, disconnect power at the PDU. The end product may have multiple power supplies. To remove all power from the product, disconnect the power for each power supply.
- In accordance with applicable national requirements for Information Technology Equipment and Telecommunications Equipment, this power supply only connects to DC power sources that are classified as SELV or TNV. Generally, these requirements are based on the International Standard for Information Technology Equipment, IEC 60950-1. In accordance with local and regional electric codes and regulations, the DC source must have one pole (Neutral/Return) reliably connected to earth ground.
- You must connect the power supply ground screw located on the front of the power supply to a suitable ground (earth) terminal. In accordance with local and regional electric codes and regulations, this terminal must be connected to a suitable building ground (earth) terminal. Do not rely on the rack or cabinet chassis to provide adequate ground (earth) continuity.

Prerequisites

Before you install this option, make sure that you have the following items available:

- Phillips No. 1 screwdriver
- Small long-nose pliers

Procedure

1. If you are installing a power supply in the power supply bay 2, remove the power supply blank.

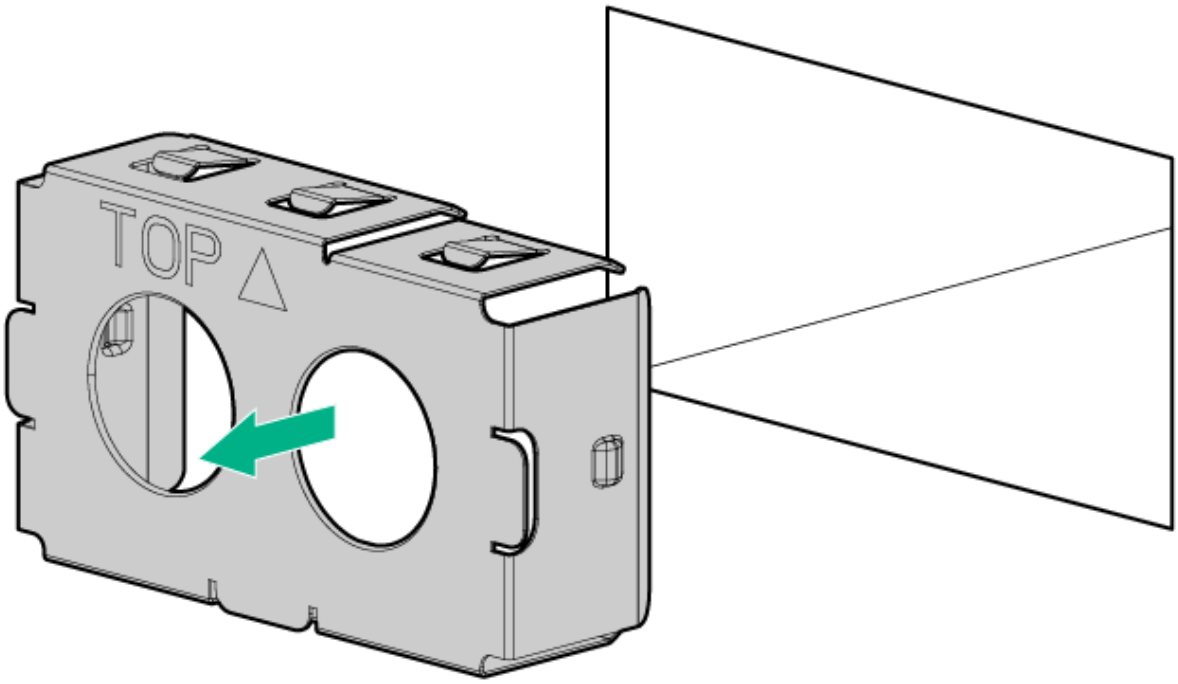

2. Remove the ring tongue.

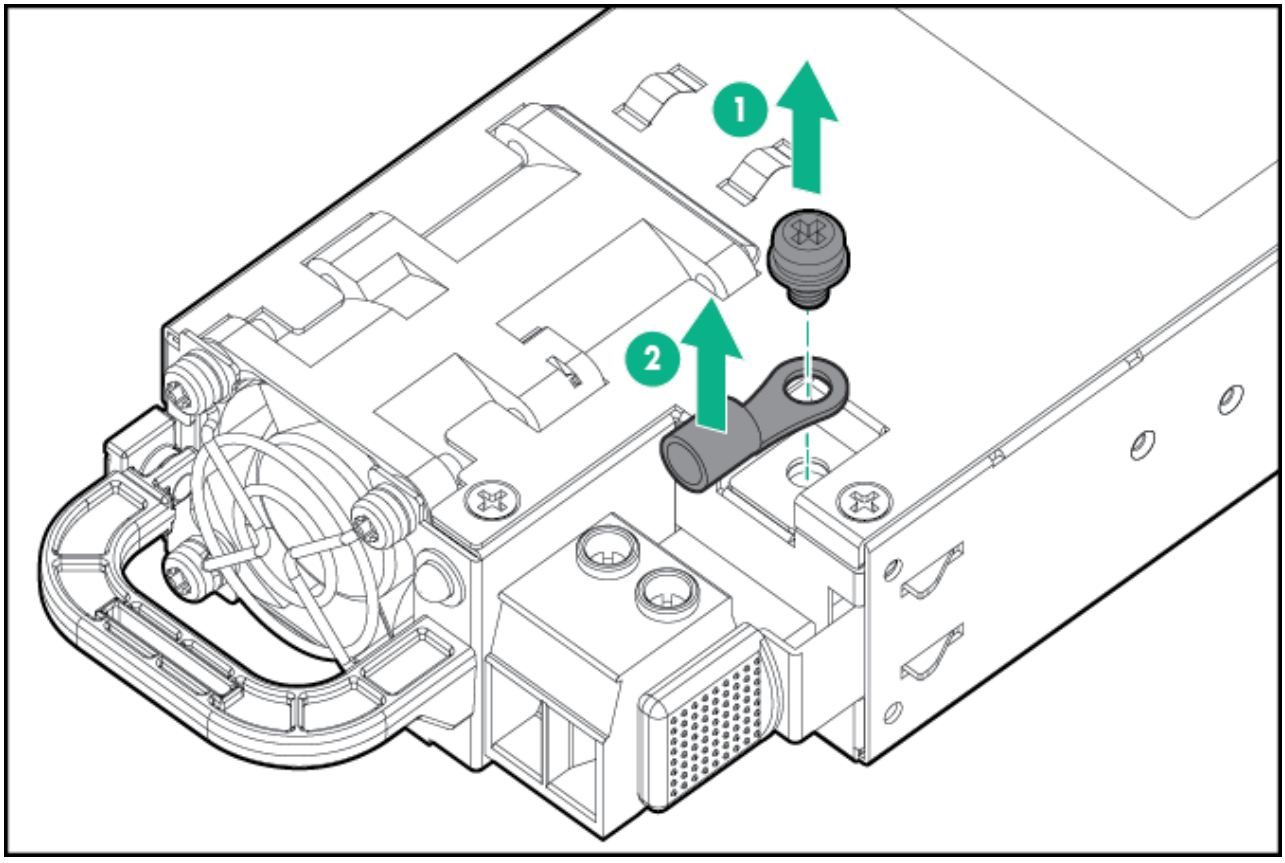

3. Crimp the ring tongue to the ground cable from the -48 V DC power source.

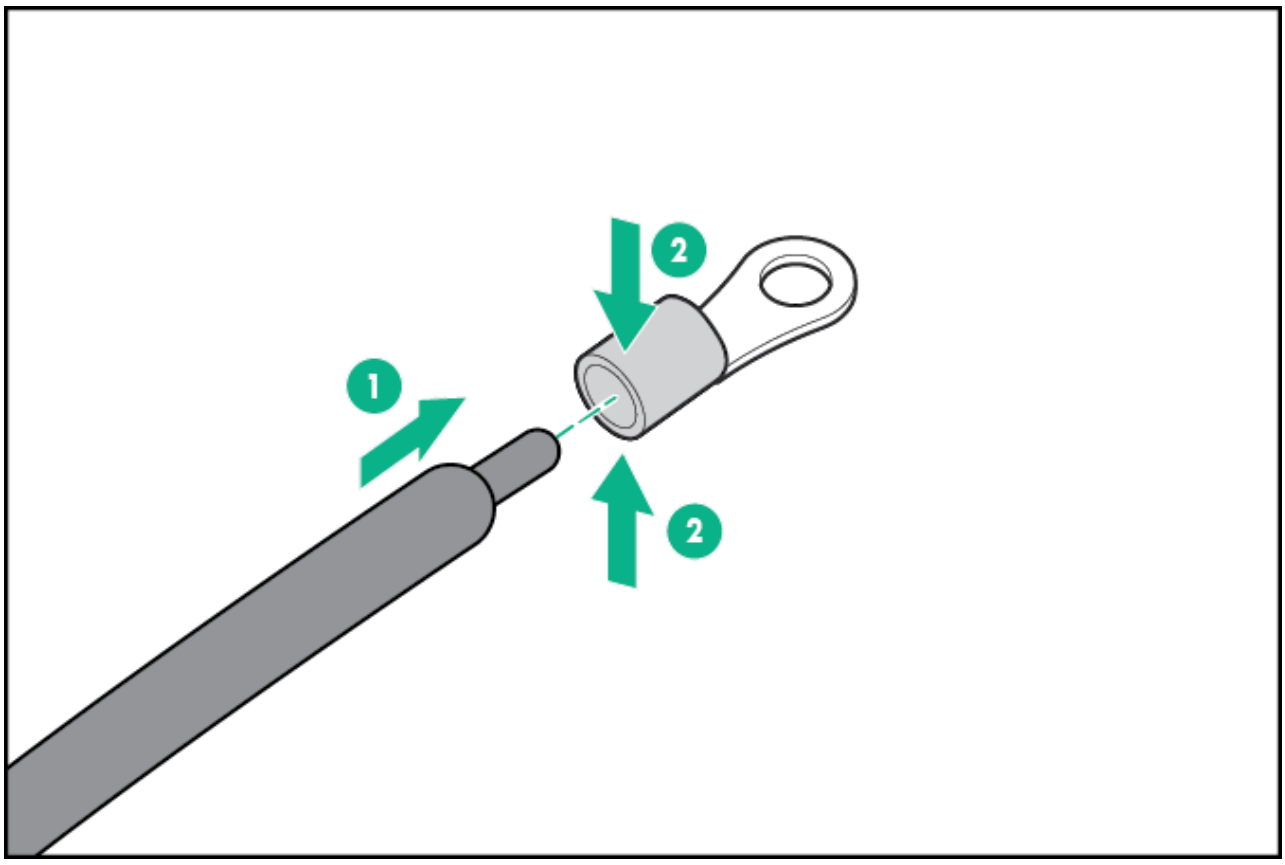

4. Remove the terminal block connector.

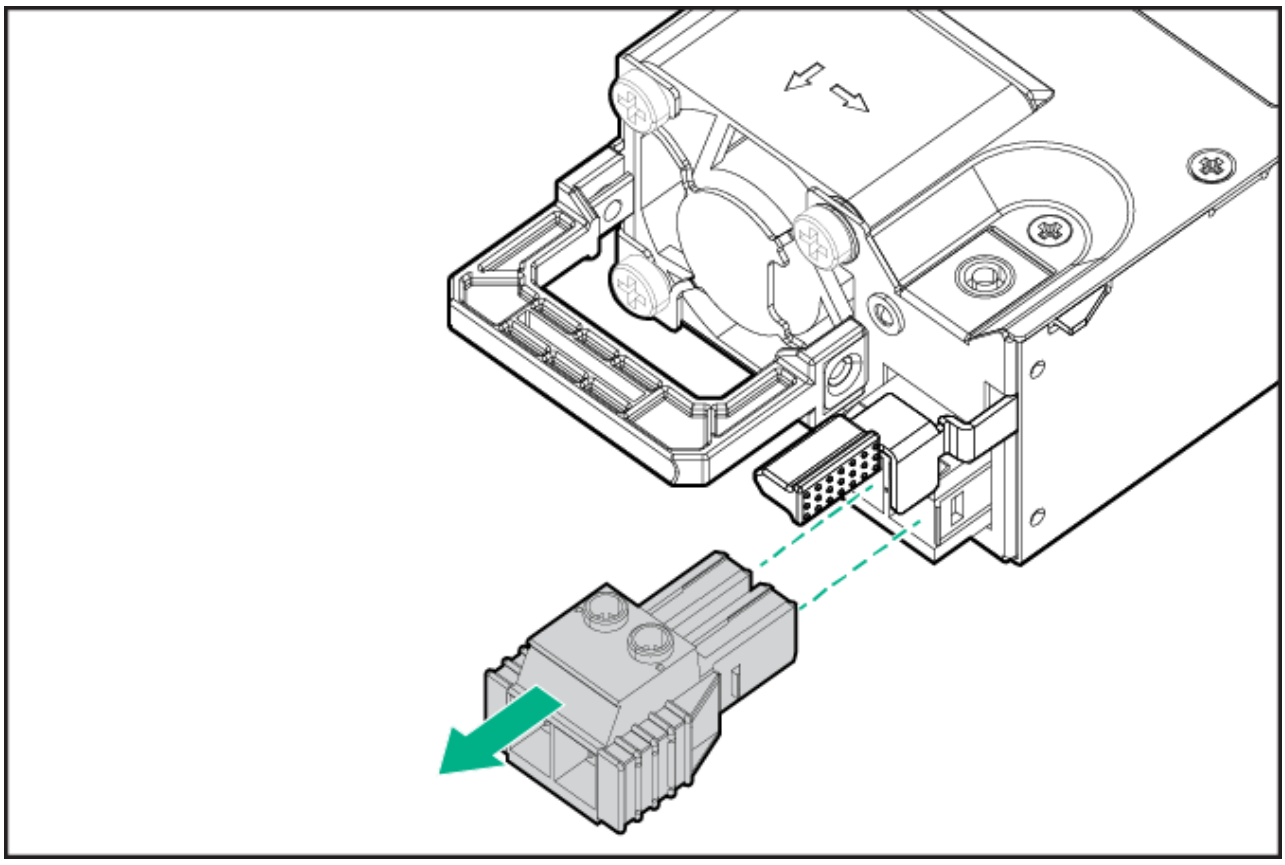

5. Loosen the screws on the terminal block connector.

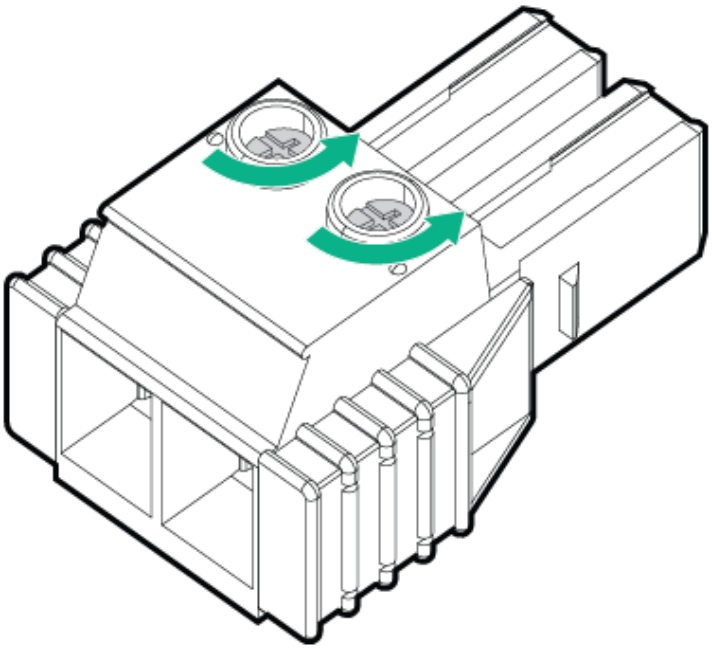

6. Attach the ground (earthed) wire to the ground screw and washer and tighten to 1.47 N m (13 lb-in) of torque. The ground wire must be connected before the -48 V wire and the return wire.

   The ground wire must be connected before the -48 V wire and the return wire.

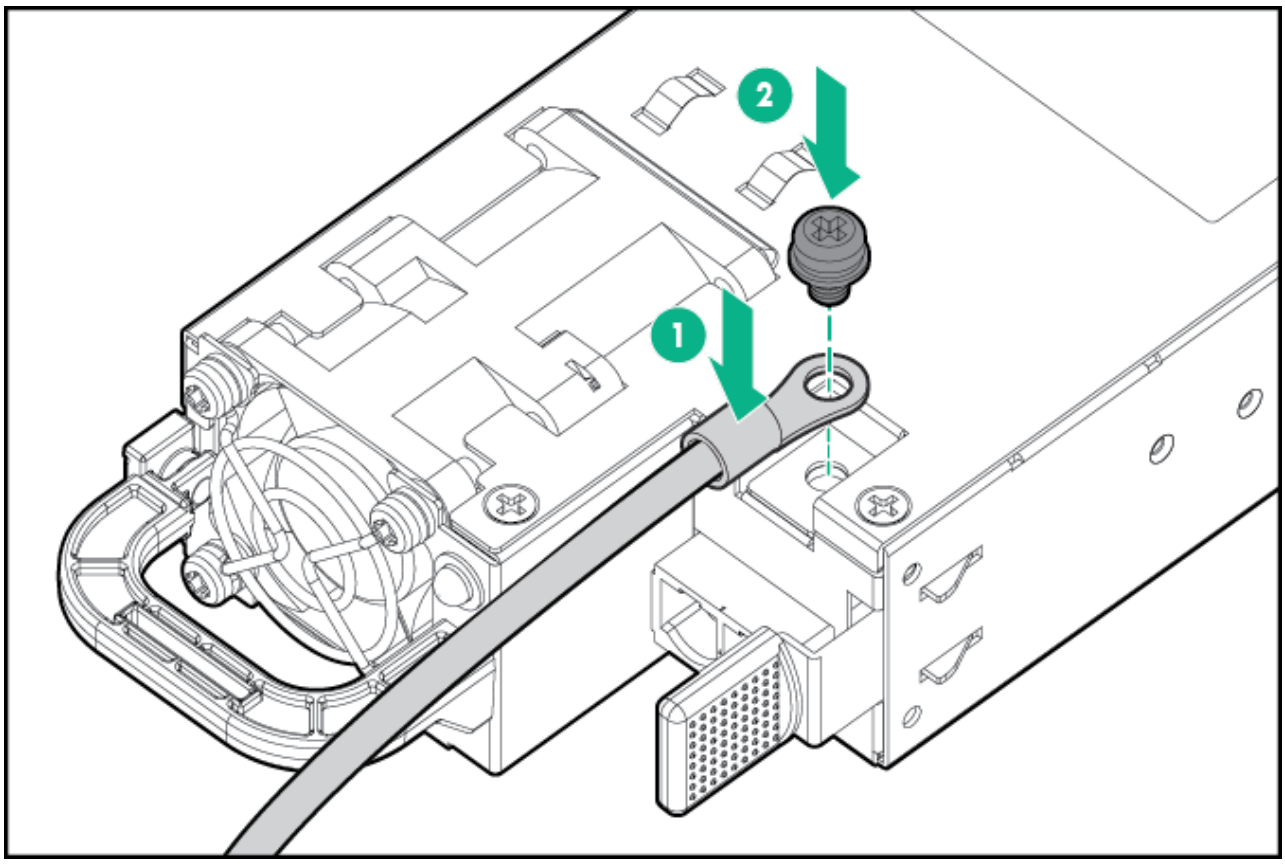

7. Insert the -48 V wire into the left side of the terminal block connector, and then tighten the screw to 1.3 N m (10 lb-in) of torque.

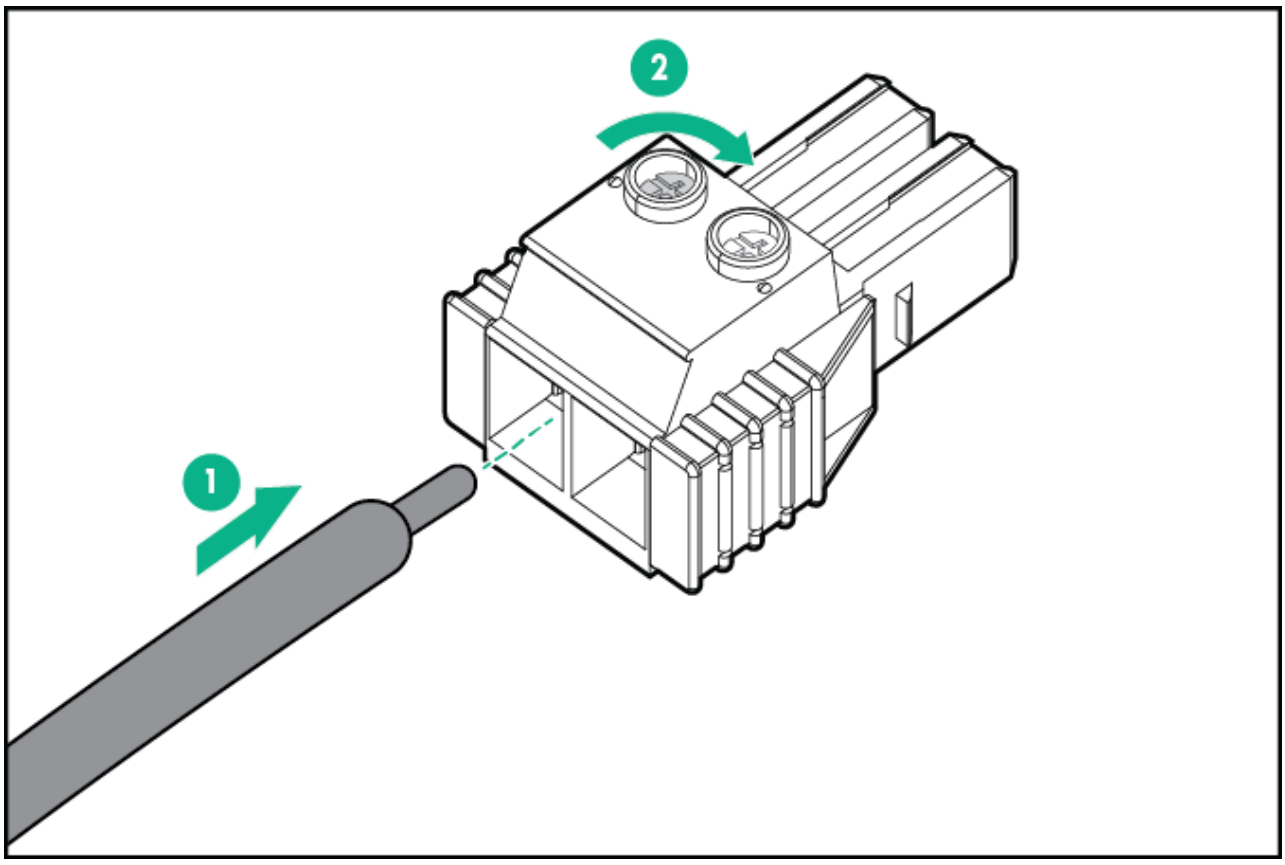

8. Insert the return wire into the right side of the connector, and then tighten the screw to 1.3 N m (10 lb-in) of torque.

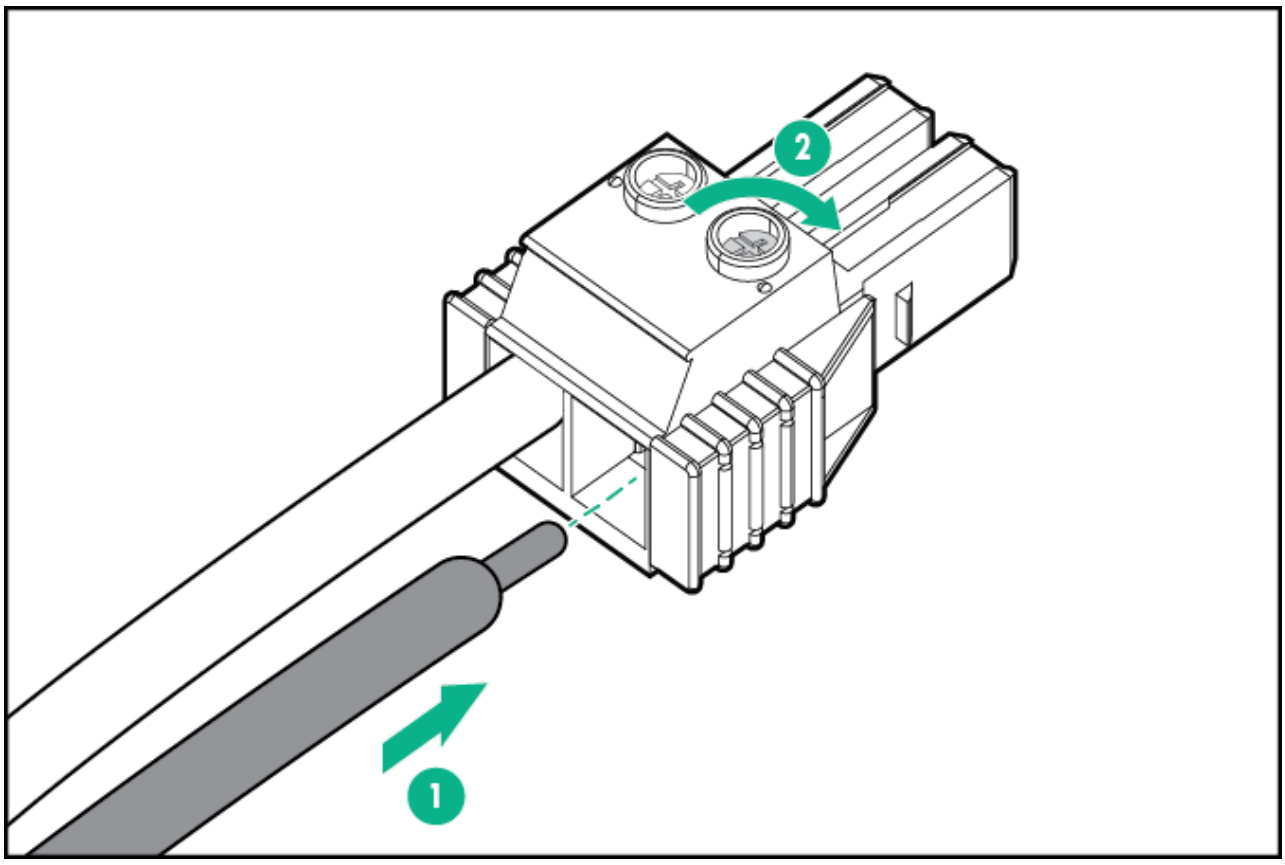

9. Install the terminal block connector in the power supply.

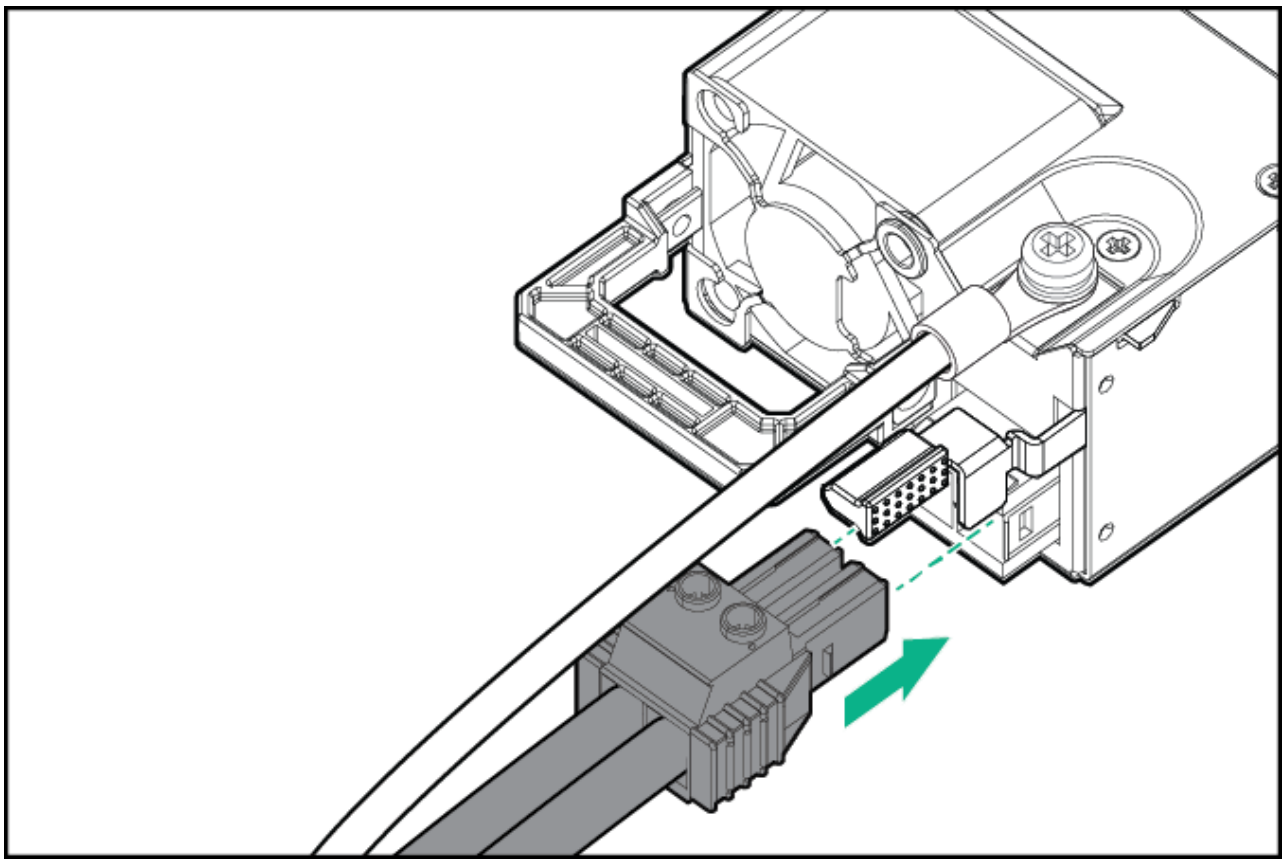

.0. To prevent accidental power cord disconnection when sliding the server in and out of the rack, secure the power cord, wires, and/or cables in the strain relief strap attached to the power supply handle:

a. Unwrap the strain relief strap from the power supply handle.

> **CAUTION:** Avoid tight bend radii to prevent damaging the internal wires of a power cord or a server cable. Never bend power cords and server cables tight enough to cause a crease in the sheathing.

b. Secure the wires and cables with the strain relief strap. Roll the extra length of the strap around the power supply handle.

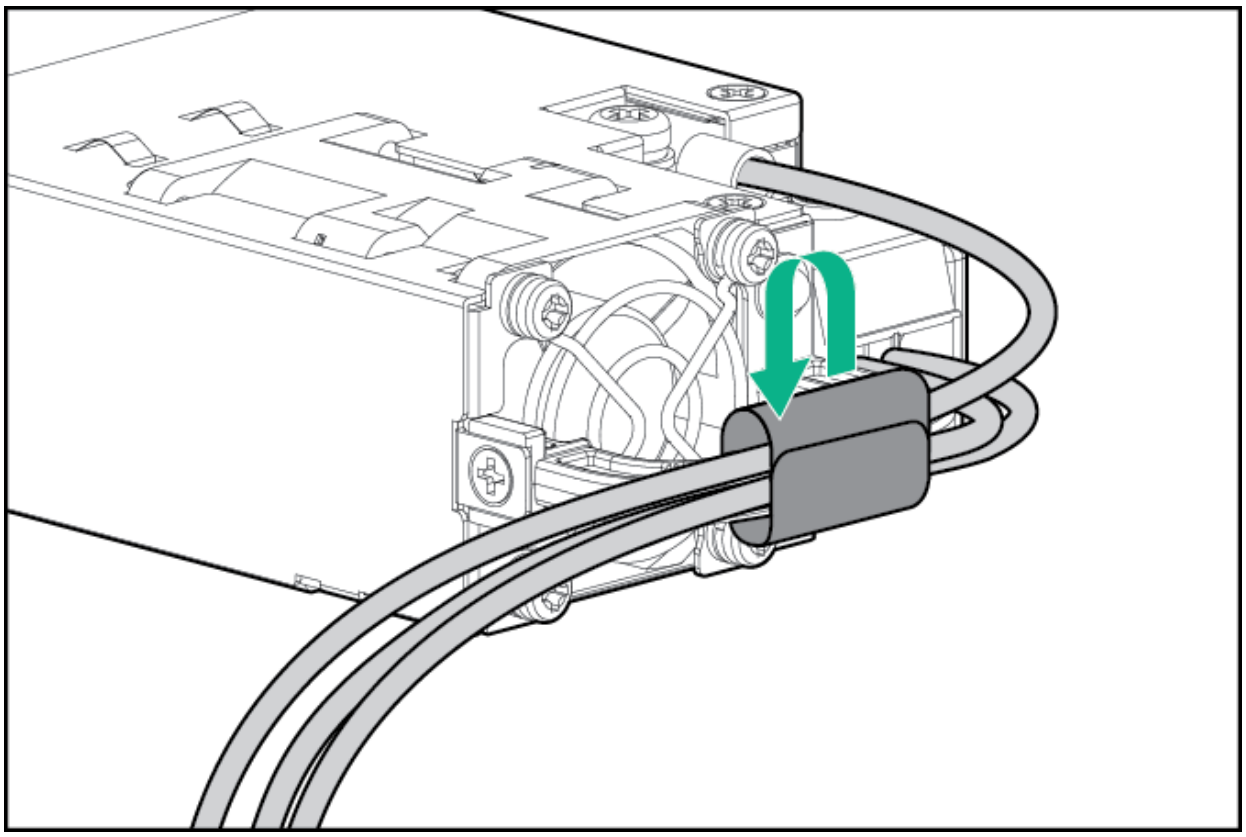

.1. Slide the power supply into the bay until it clicks into place.

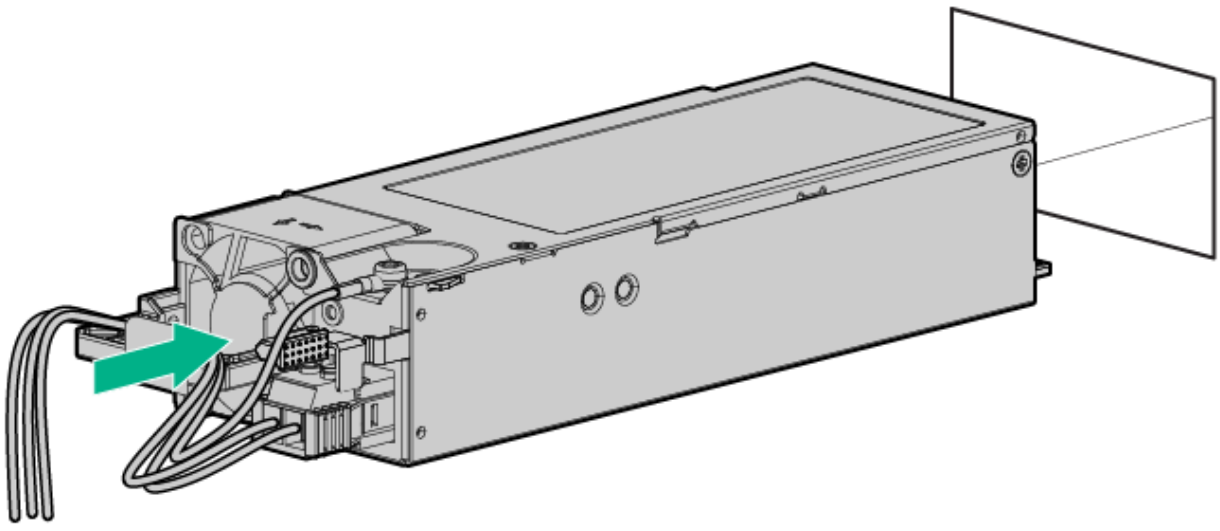

.2. Make sure the -48V DC power source is off or the PDU breaker is in the off position.

.3. Connect the power cord to the -48V DC power source or PDU.

4. Turn on the -48V power source or switch the PDU breaker to the on position to supply -48V to the power supply.
5. Make sure that the power supply LED is green.

The installation is complete.

Optical drive option

Installing an optical drive in an LFF chassis

Prerequisites

Before you perform this procedure, make sure that you have the following tools available:

- T-10 Torx screwdriver
- Phillips No. 1 screwdriver

Procedure

1. If installed, remove the front bezel.
2. Power down the server.
3. Remove all power:
   a. Disconnect each power cord from the power source.
   b. Disconnect each power cord from the server.
4. Disconnect all peripheral cables from the server.
5. Remove the server from the rack.
6. Remove the access panel.
7. Remove the optical drive blank.

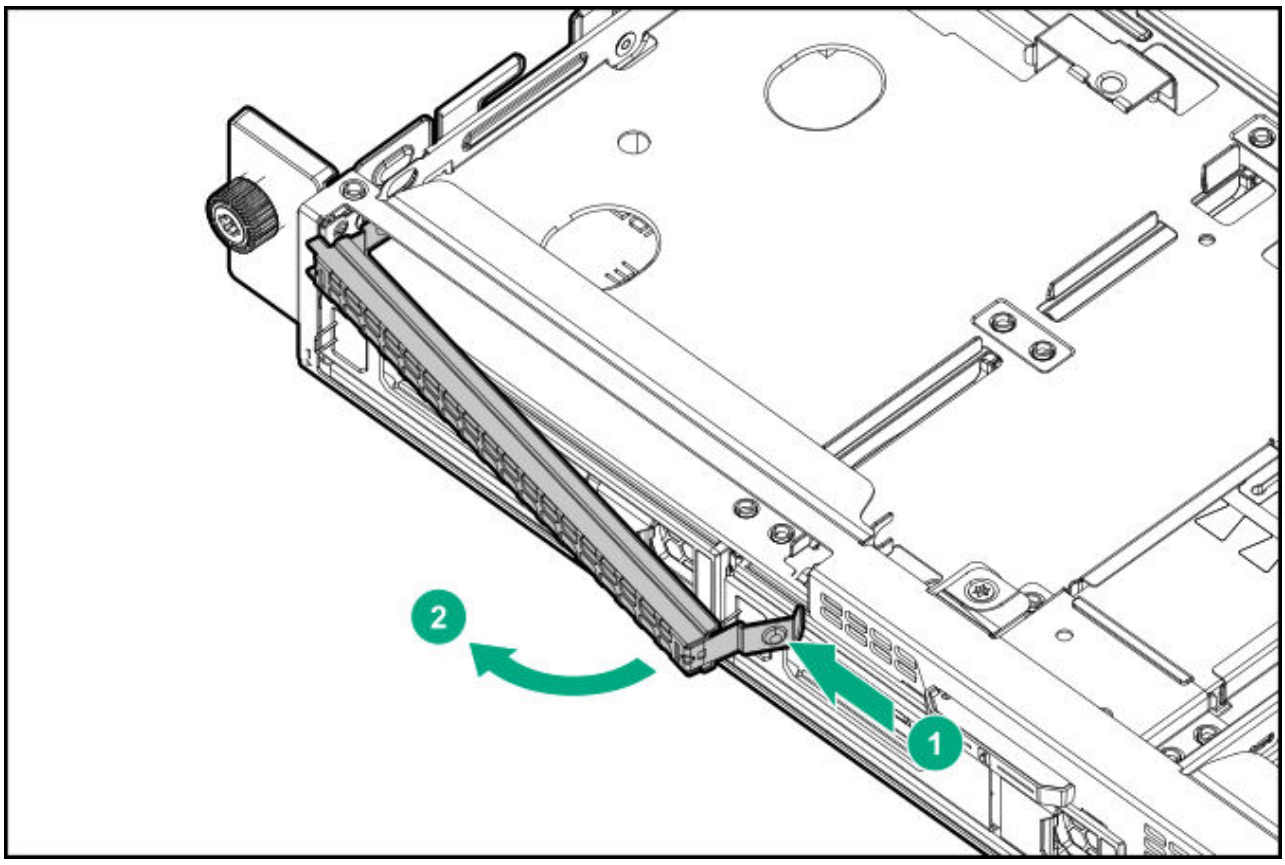

8. Install the optical drive bracket.

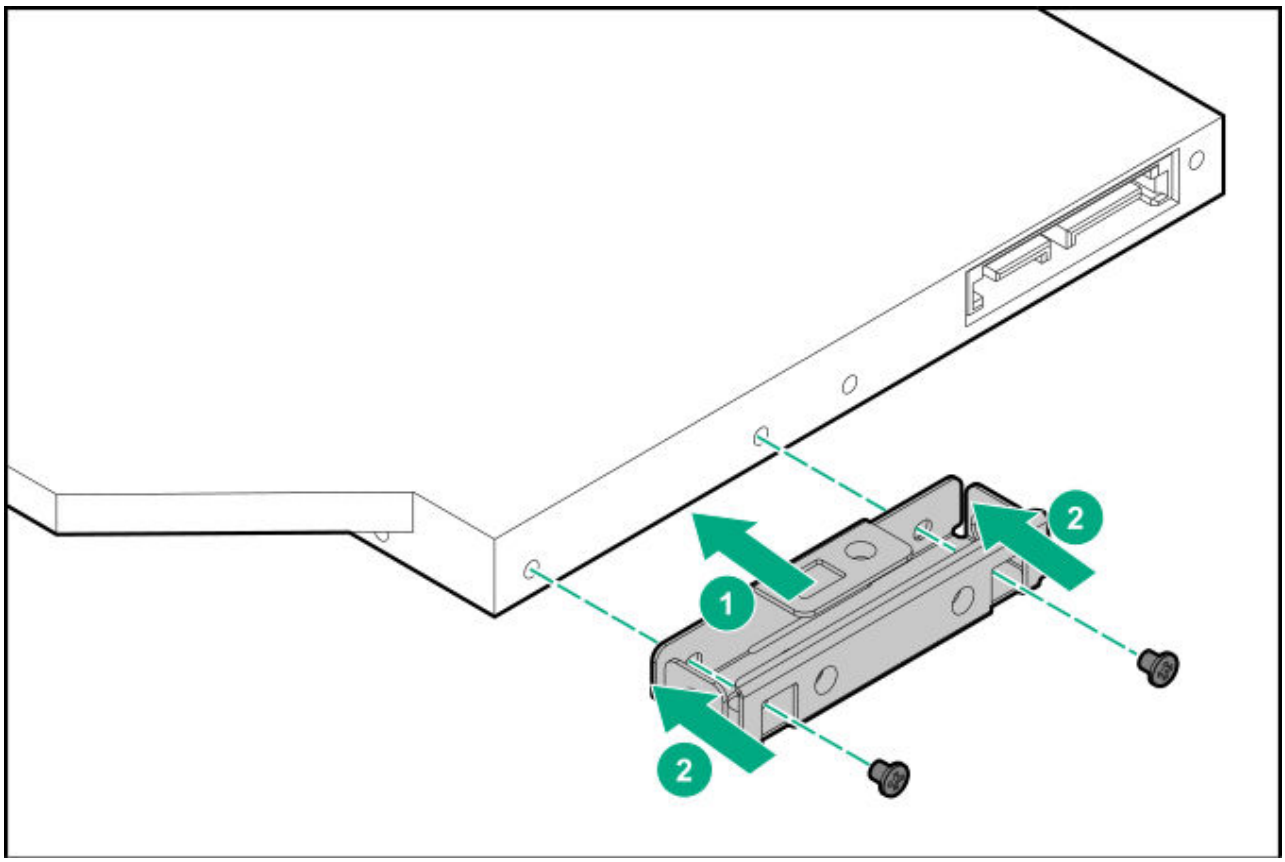

9. Install the optical drive in the optical drive bay.

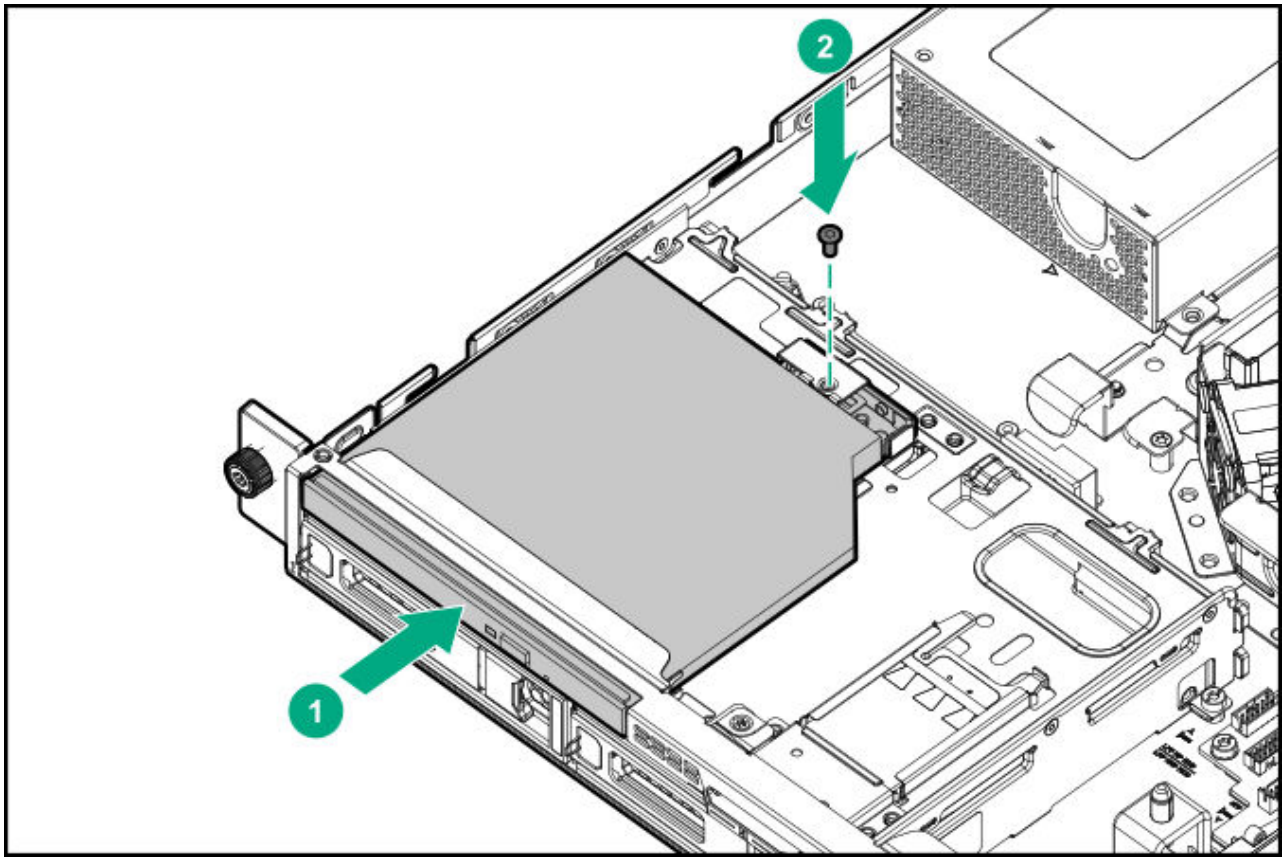

.0. Connect the optical drive SATA-power Y-cable.

.1. Install the access panel.

.2. Install the server into the rack.

.3. Connect all peripheral cables to the server.

.4. Connect the power cords:

   a. Connect each power cord to the server.

   b. Connect each power cord to the power source.

.5. Power up the server.

.6. If removed, install the front bezel.

The installation is complete.

Installing an optical drive in an SFF chassis

Prerequisites

Before you perform this procedure, make sure that you have the following items available:

- T-10 Torx screwdriver
- Phillips No. 1 screwdriver

Procedure

1. If installed, remove the front bezel.
2. Power down the server.
3. Remove all power:
   a. Disconnect each power cord from the power source.
   b. Disconnect each power cord from the server.
4. Disconnect all peripheral cables from the server.
5. Remove the server from the rack.
6. Remove the access panel.
7. Remove the media bay blank:
   a. Remove the screws securing the media bay blank.

      Retain the screws for installing the optical drive cage.
   b. Disengage the media bay blank.
   c. Remove the media bay blank.

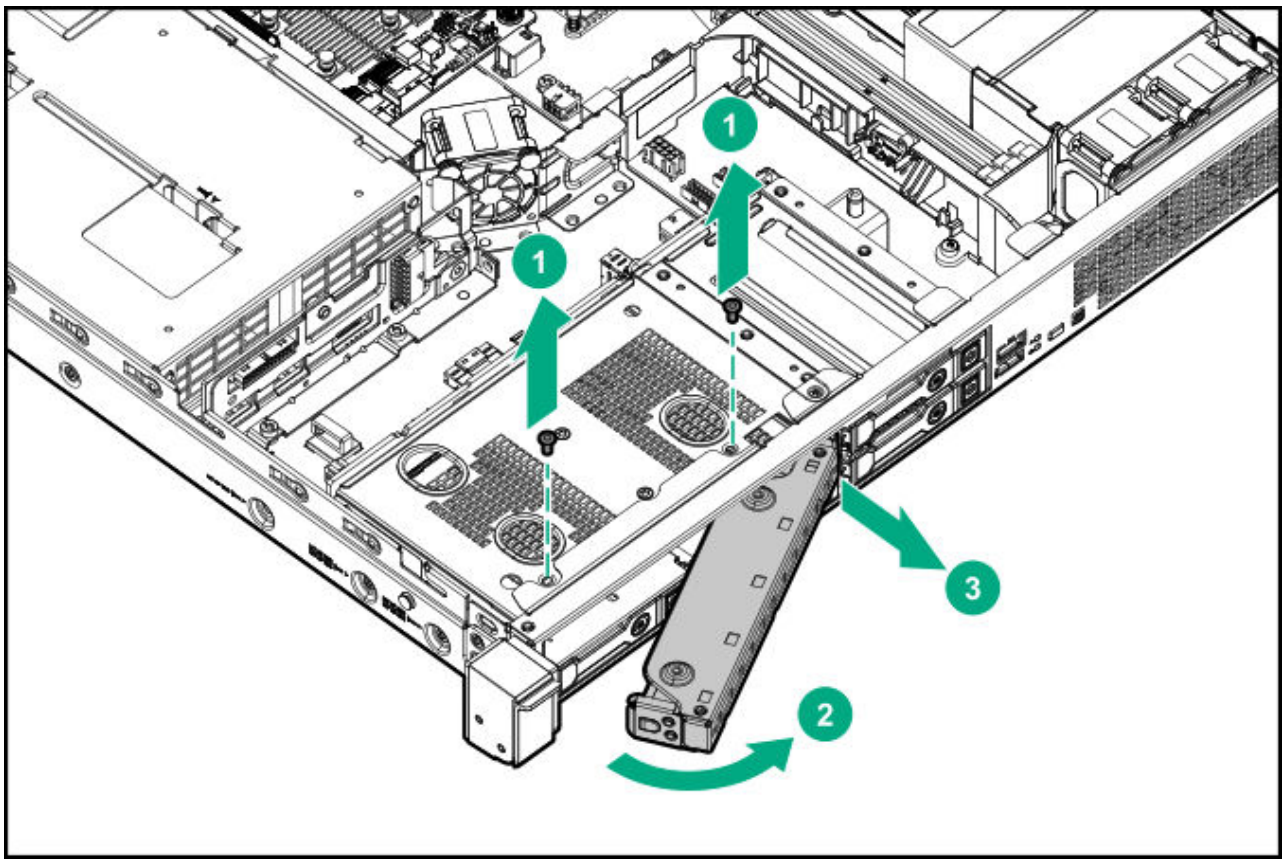

8. Remove the optical drive blank.

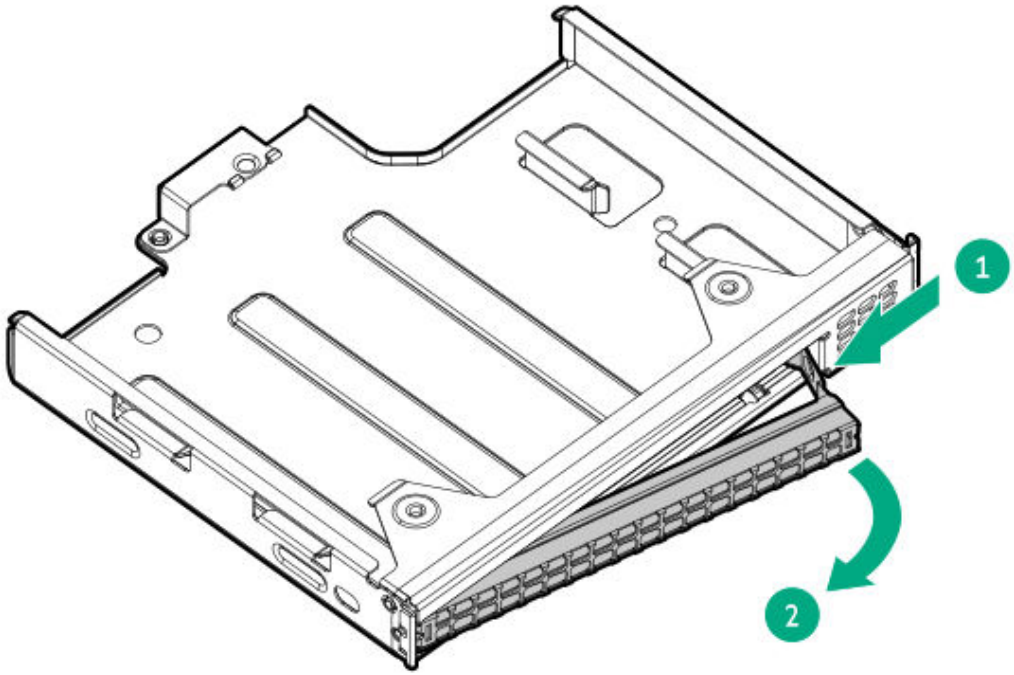

9. Install the optical drive bracket.

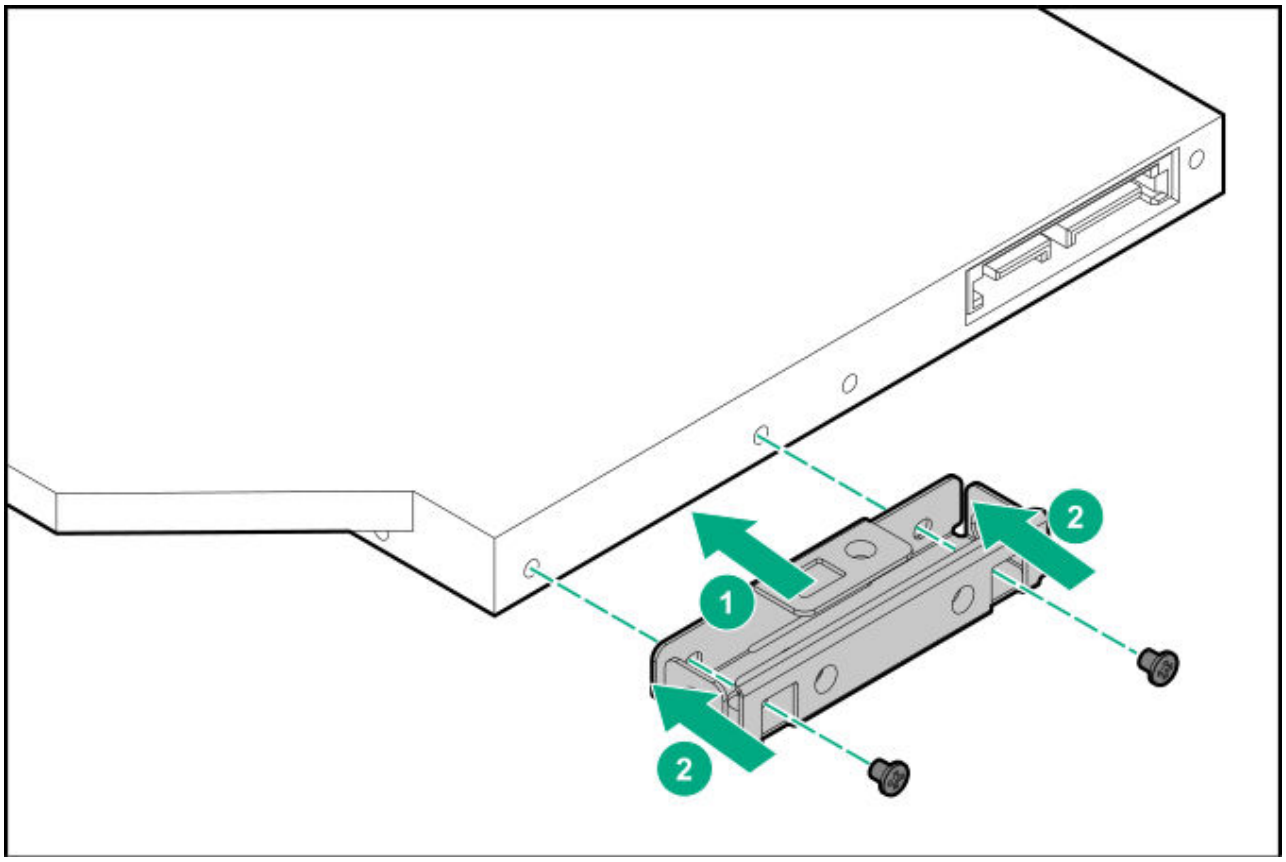

.0. Install the optical drive in the optical drive cage.

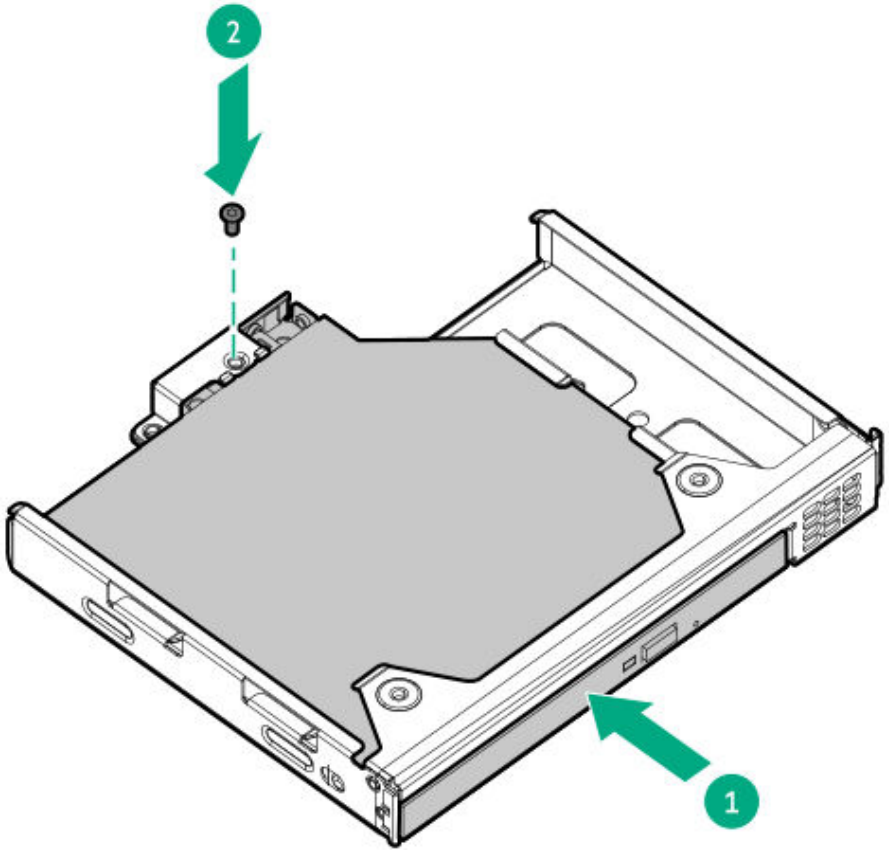

.1. Install the optical drive cage assembly in the media bay.

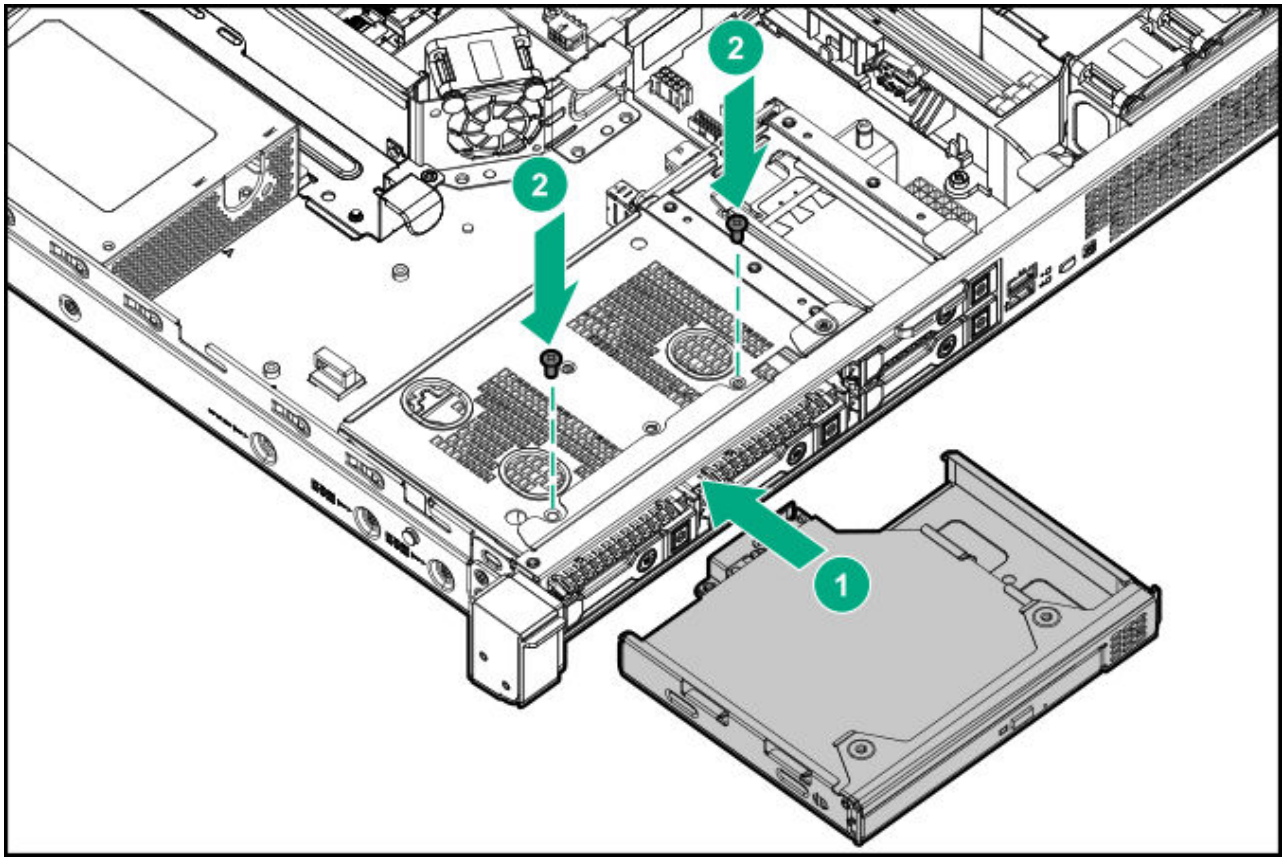

.2. Connect the optical drive SATA-power Y-cable.

.3. Install the access panel.

.4. Install the server into the rack.

.5. Connect all peripheral cables to the server.

.6. Connect the power cords:

   a. Connect each power cord to the server.

   b. Connect each power cord to the power source.

.7. Power up the server.

.8. If removed, install the front bezel.

The installation is complete.

Installing the two-bay SFF drive cage option

Prerequisites

Before you perform this procedure, make sure that you have a T-10 Torx screwdriver available.

Procedure

1. If installed, remove the front bezel.
2. Power down the server.
3. Remove all power:
   a. Disconnect each power cord from the power source.
   b. Disconnect each power cord from the server.
4. Disconnect all peripheral cables from the server.
5. Remove the server from the rack.
6. Remove the access panel.
7. Remove the media bay blank:
   a. Remove the screws securing the media bay blank.

      Retain the screws for installing the optical drive cage.
   b. Disengage the media bay blank.
   c. Remove the media bay blank.

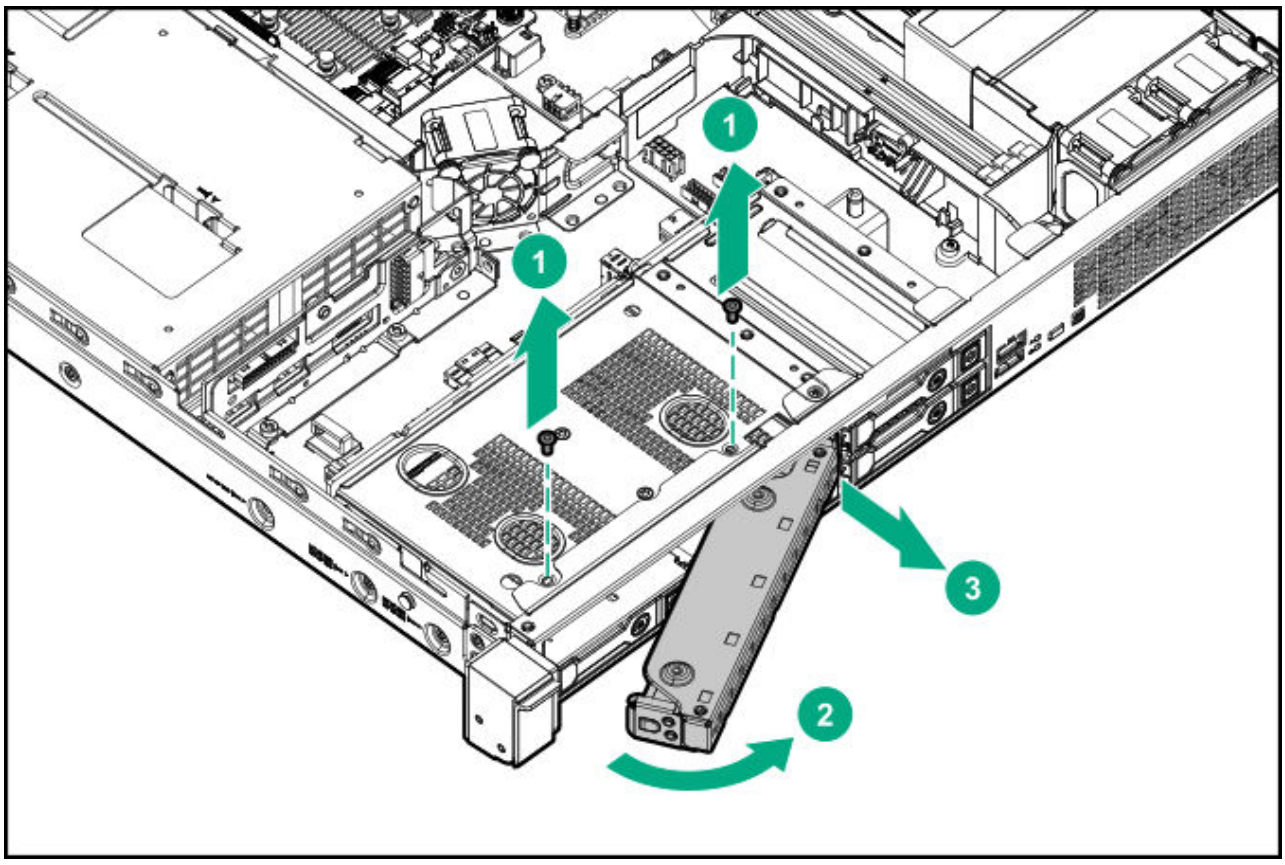

8. Install the drive cage.

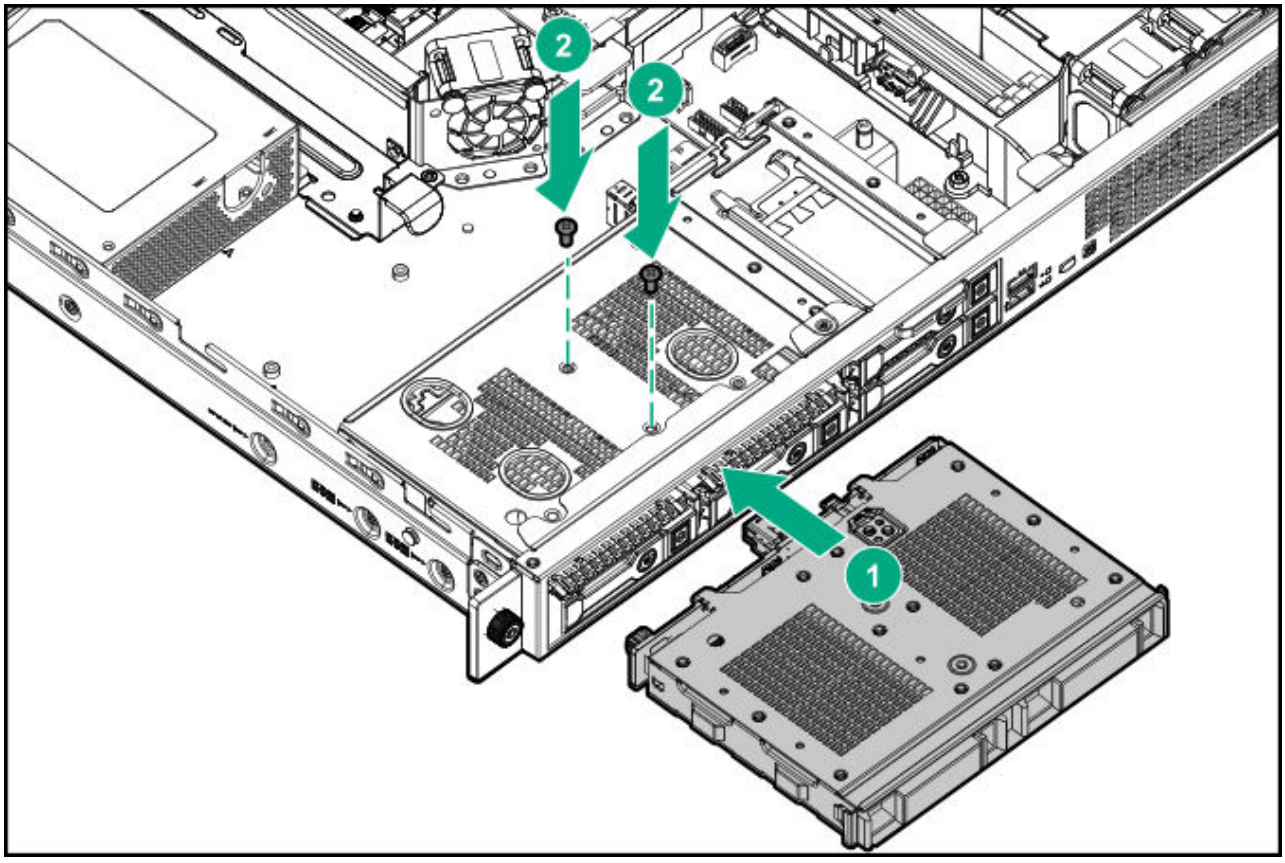

9. Install the drives.
10. Connect the drive cables.
11. Install the access panel.
12. Install the server into the rack.
13. Connect all peripheral cables to the server.
14. Connect the power cords:
    a. Connect each power cord to the server.
    b. Connect each power cord to the power source.
15. Power up the server.
16. If removed, install the front bezel.

The installation is complete.

Memory options

IMPORTANT: This server does not support mixing RDIMMs and UDIMMs. Attempting to mix any combination of these DIMMs can cause the server to halt during BIOS initialization. All memory installed in the server must be of the same type.

DIMM population information

For specific DIMM population information, see the DIMM population guidelines on the Hewlett Packard Enterprise website (**https://www.hpe.com/docs/standard-population-rules**).

Installing a DIMM

Procedure

1. If installed, remove the front bezel.
2. Power down the server.
3. Remove all power:
   a. Disconnect each power cord from the power source.
   b. Disconnect each power cord from the server.
4. Disconnect all peripheral cables from the server.
5. Remove the server from the rack.
6. Remove the access panel.
7. Open the DIMM slot latches.
8. Align the notch on the bottom edge of the DIMM with the keyed surface of the DIMM slot, and then fully press the DIMM into the slot until the latches snap back into place.

   The DIMM slots are structured to ensure proper installation. If you try to insert a DIMM but it does not fit easily into the slot, you might have positioned it incorrectly. Reverse the orientation of the DIMM and insert it again.

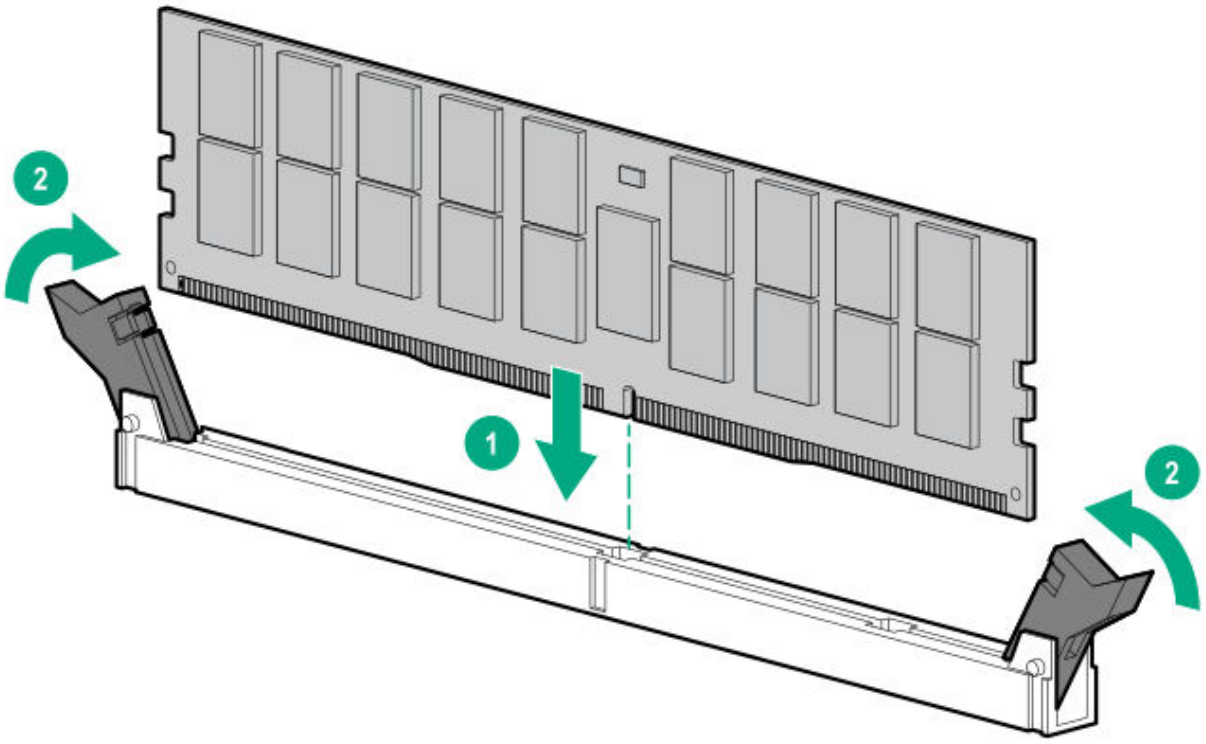

9. Install the access panel.
10. Install the server into the rack.
11. Connect all peripheral cables to the server.
12. Connect the power cords:
    a. Connect each power cord to the server.
    b. Connect each power cord to the power source.
13. Power up the server.
14. If removed, install the front bezel.

The installation is complete.

After installing the DIMMs, use the **System Utilities > System Configuration > BIOS/Platform > Configuration (RBSU) > Memory Options** to configure the memory settings.

M.2 SSD/dedicated iLO/serial port enablement option

The M.2 SSD/dedicated iLO/serial port enablement option adds support for:

- M.2 NVMe SSD
- iLO Dedicated Network Port
- Serial port

M.2 SSD/dedicated iLO/serial port enablement option components

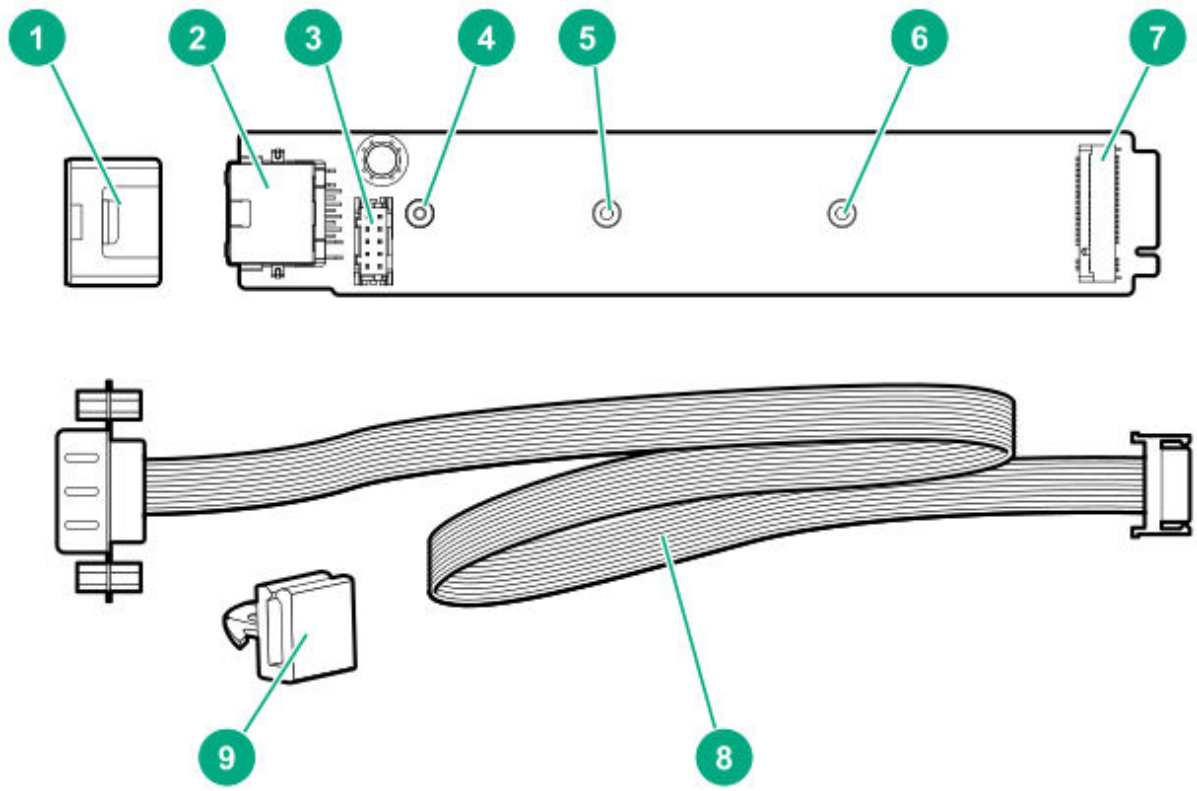

Item	Description
1	Enablement board stabilizer [1]

Item	Description
2	iLO Dedicated Network Port
3	Serial port cable connector
4	M.2 22110 SSD standoff
5	M.2 2280 SSD standoff
6	M.2 2242 SSD standoff
7	M.2 SSD slot
8	Serial port cable
9	Serial port cable clip [1]

[1] This component is not required for installing the M.2 SSD/dedicated iLO/serial port enablement option in the HPE ProLiant DL20 Gen10 Server.

M.2 SSD standoffs in the system board

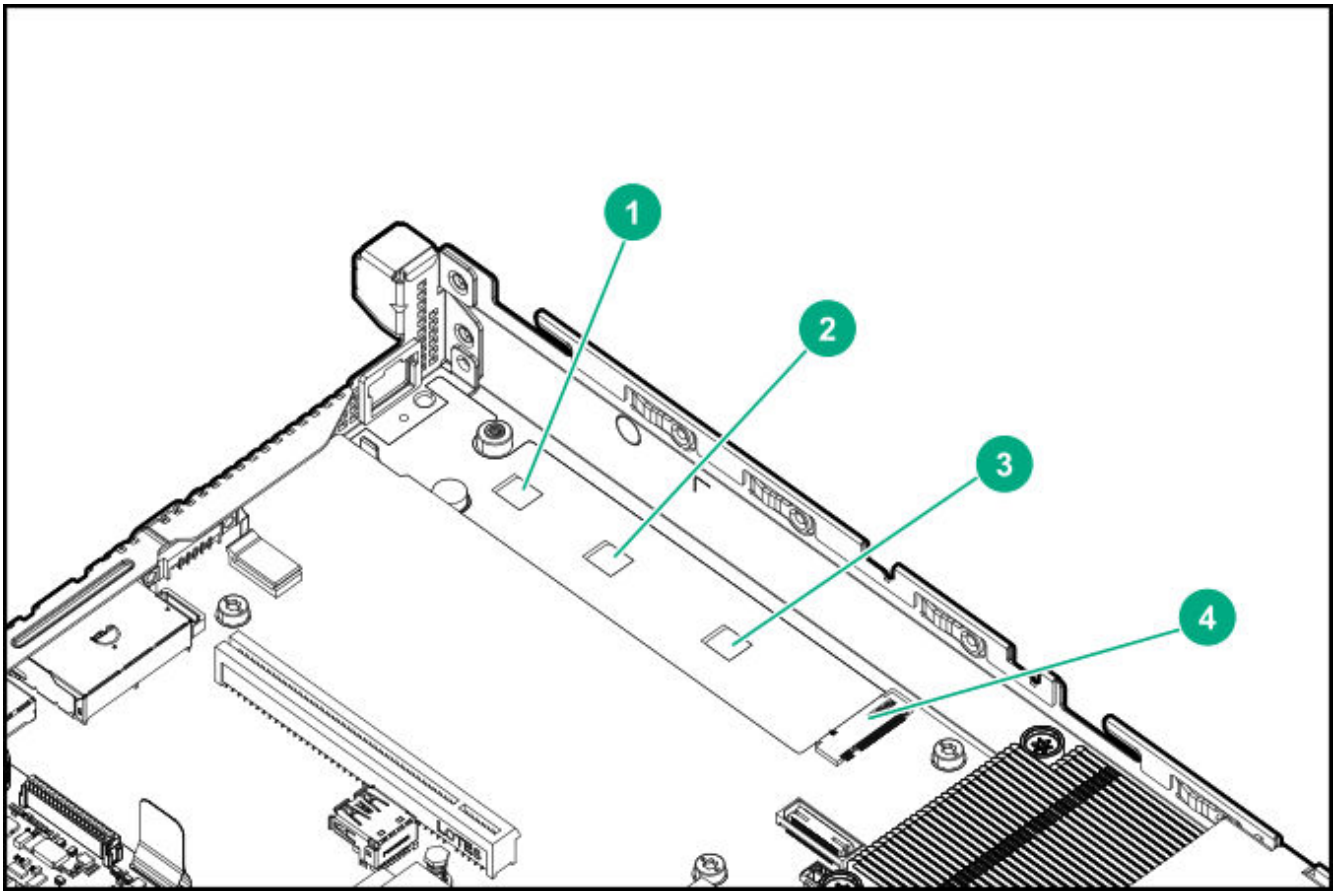

Item	Description
1	M.2 22110 SSD standoff
2	M.2 2280 SSD standoff
3	M.2 2242 SSD standoff
4	M.2 SSD slot

Installing the M.2 SSD/dedicated iLO/serial port enablement board

Prerequisites

Before you perform this procedure, make sure that you have the following tools available:

- T-15 Torx screwdriver
- 4.5 mm hex nut screwdriver

Procedure

1. If installed, remove the front bezel.
2. Power down the server.
3. Remove all power:
   a. Disconnect each power cord from the power source.
   b. Disconnect each power cord from the server.
4. Disconnect all peripheral cables from the server.
5. Remove the server from the rack.
6. Remove the access panel.
7. Remove the riser cage.
8. Remove the iLO dedicated network port blank.

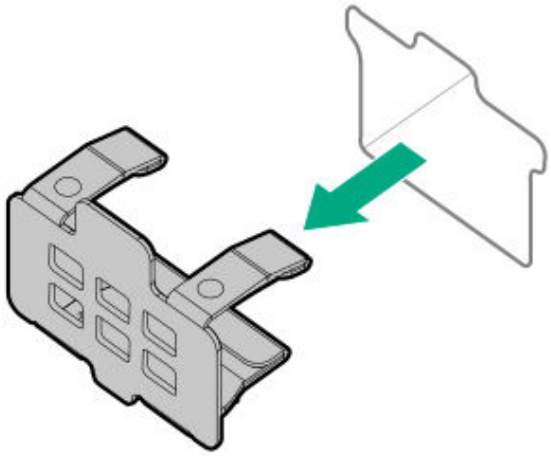

9. Remove the M.2 air guider.

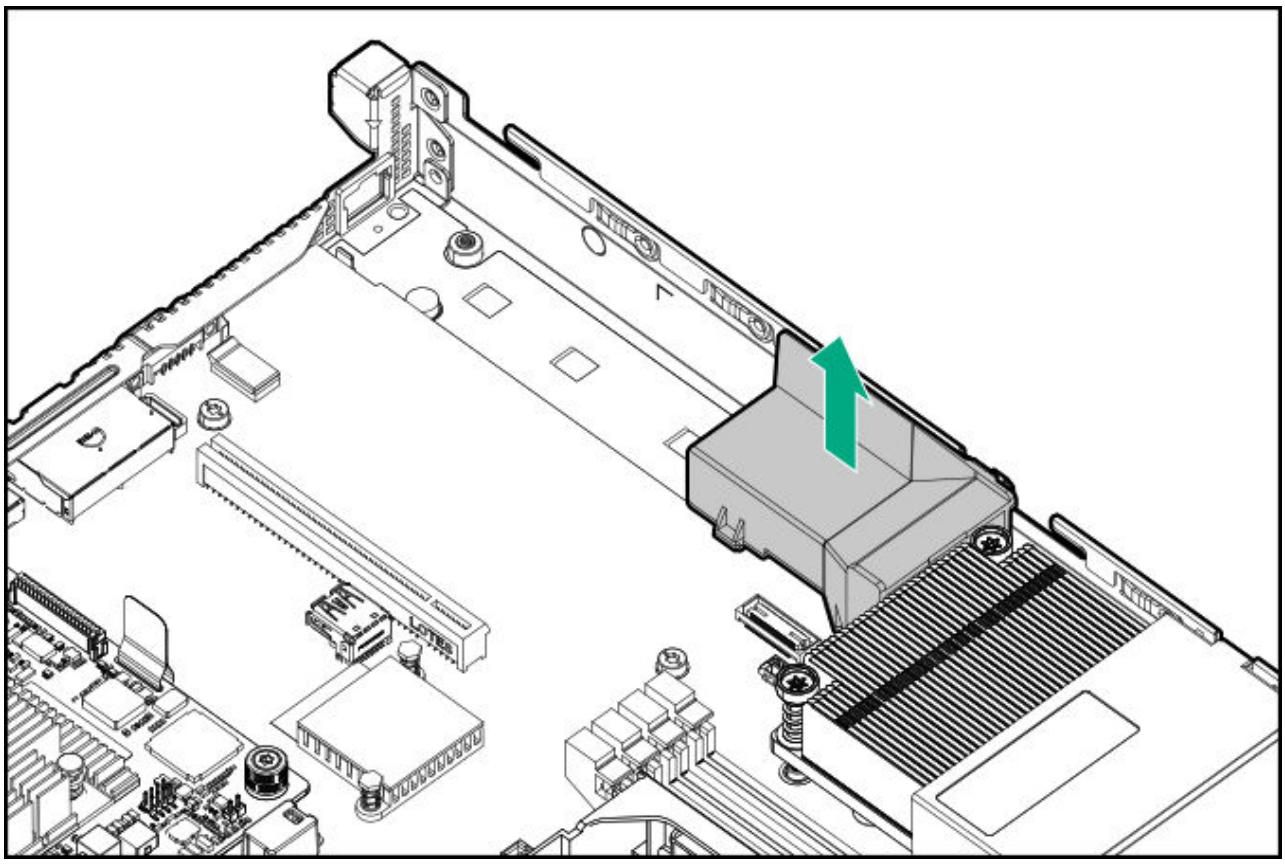

.0. Identify the M.2 SSD type to be installed in the enablement board.

.1. Remove the system board mounting screw and hex nut corresponding to the M.2 SSD type.

Retain these fasteners for future use.

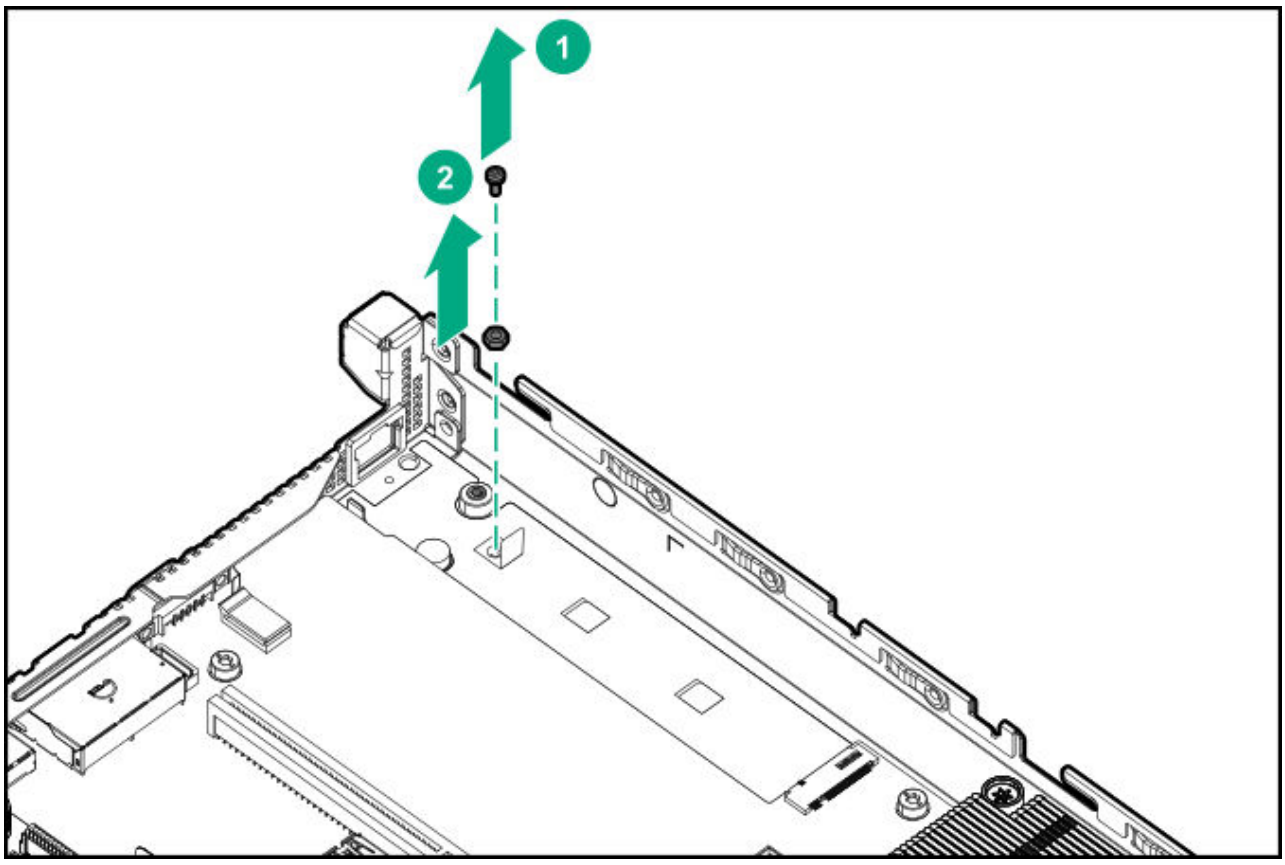

.2. Smoothen the mylar tape adjacent to the onboard M.2 SSD slot.

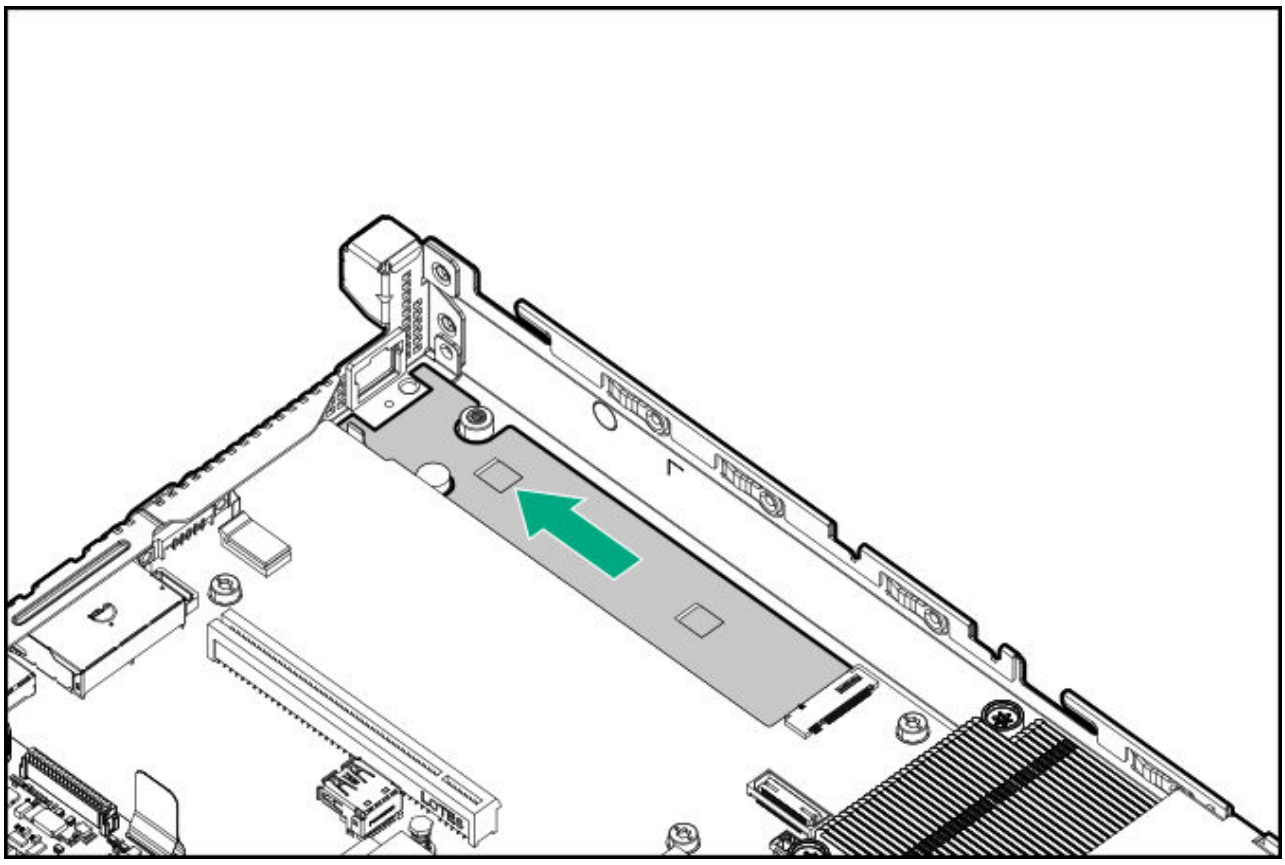

.3. Install the M.2 SSD/dedicated iLO/serial port enablement board:

a. Insert the enablement board into the M.2 SSD slot at a 45° angle.

b. Carefully press the enablement board down to the horizontal position.

c. Install the enablement board screw.

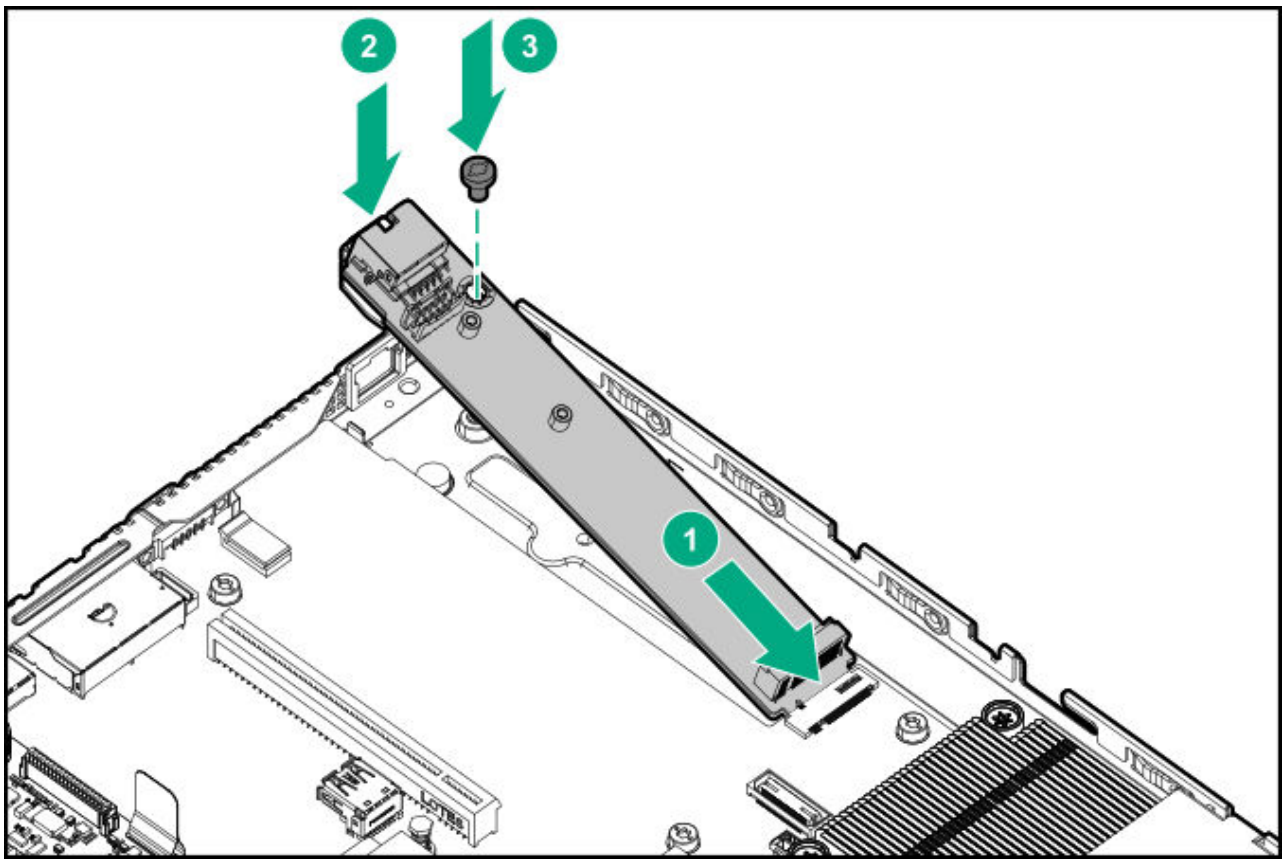

.4. Perform the action corresponding to the enablement feature you require:

- Install an M.2 NVMe SSD.
- Install the serial port cable.

.5. Install the riser cage.

.6. Install the M.2 air guider.

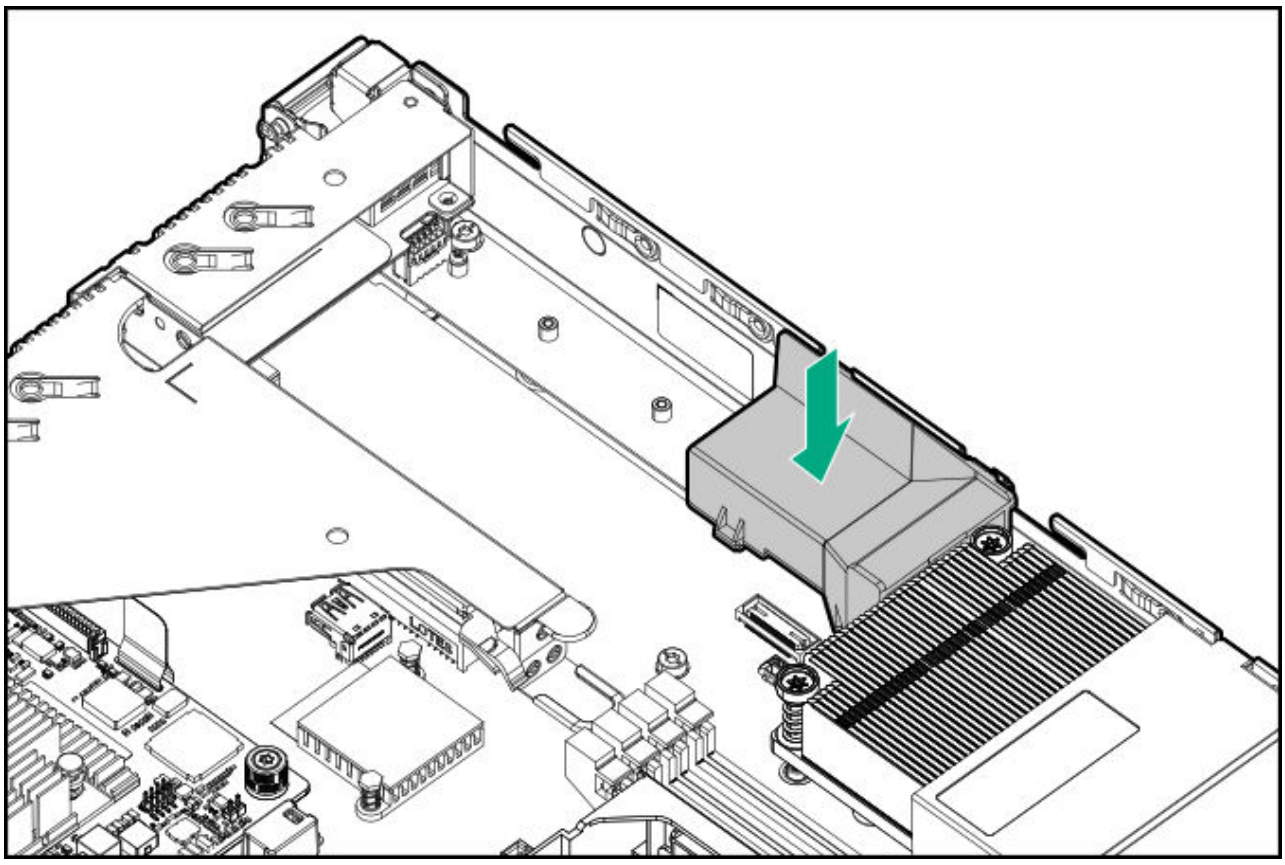

7. Install the access panel.
8. Install the server into the rack.
9. Connect all peripheral cables to the server.
10. Connect the power cords:
    a. Connect each power cord to the server.
    b. Connect each power cord to the power source.
11. Power up the server.
12. If removed, install the front bezel.
13. If you plan to use the iLO Dedicated Network Port, use the iLO web interface to enable this port.

    For more information, see the Enabling the iLO Dedicated Network Port through the iLO web interface section in the iLO user guide on the **Hewlett Packard Enterprise website**.

The installation is complete.

Installing the serial port cable

Prerequisites

Before you perform this procedure, make sure that:

- The M.2 SSD/dedicated iLO/serial port enablement board is installed.
- 5 mm hex nut screwdriver is available.

Procedure

1. If installed, remove the front bezel.
2. Power down the server.
3. Remove all power:
   a. Disconnect each power cord from the power source.
   b. Disconnect each power cord from the server.
4. Disconnect all peripheral cables from the server.
5. Remove the server from the rack.
6. Remove the access panel.
7. Remove the riser cage.
8. Remove the serial port blank.

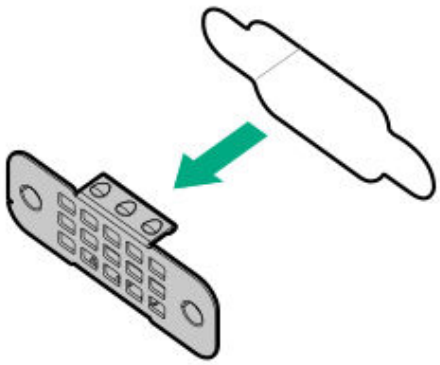

9. Install the serial port cable.

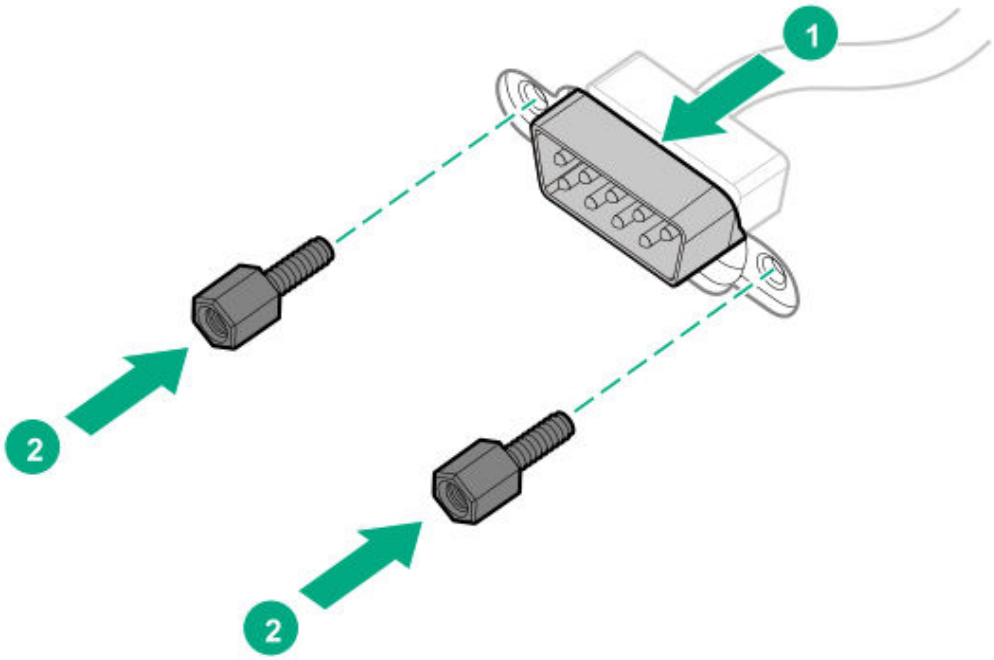

.0. Connect the serial port cable to the M.2 SSD/dedicated iLO/serial port enablement board.

.1. Install the riser cage.

.2. Install the access panel.

.3. Install the server into the rack.

.4. Connect all peripheral cables to the server.

.5. Connect the power cords:

   a. Connect each power cord to the server.

   b. Connect each power cord to the power source.

.6. Power up the server.

.7. If removed, install the front bezel.

The installation is complete.

Enabling the dedicated iLO management module

The onboard NIC 1/shared iLO connector is set as the default system iLO connector. To enable the dedicated iLO management module, use the iLO 5 Configuration Utility accessible within the HPE UEFI System Utilities.

For more information on the UEFI System Utilities, see the UEFI documentation on the Hewlett Packard Enterprise website (**https://www.hpe.com/servers/uefi**).

> **IMPORTANT:**
> If the iLO configuration settings are reset to the default values, remote access to the machine will be lost. Access the physical machine and repeat the procedure described in this section to re-enable the dedicated iLO management connector.

Procedure

1. During the server startup sequence after installing the module, press **F9** in the POST screen.

   The System Utilities screen appears.

2. Select System Configuration | iLO 5 Configuration Utility.

   The iLO 5 Configuration Utility screen appears.

3. Select **Network Options**, and then press **Enter**.

   The Network Options screen appears.

4. Set the **Network Interface Adapter** field to **ON**, and then press **Enter**.

5. Press **F10** to save your changes.

   A message prompt to confirm that the iLO settings reset appears.

6. Press **Enter** to reboot the iLO settings.

7. Press **Esc** until the main menu is displayed.

8. Select **Reboot the System** to exit the utility and resume the boot process.

   The IP address of the enabled dedicated iLO connector appears on the POST screen on the subsequent boot-up. Access the Network Options screen again to view this IP address for later reference.

M.2 SSD option

There are three ways to install an M.2 SSD in this server:

- For M.2 NVMe SSD, install the SDD in either one of the following:
  - System board
  - M.2 SSD/dedicated iLO/serial port enablement board option
- For M.2 SATA SSD, install the SSD in the M.2 SATA SSD enablement board option.

The SmartSSD Wear Gauge reports in the HPE Smart Storage Administrator contain information about the current usage level and remaining expected lifetime of SSDs attached to the system. For more information, see the HPE Smart Array SR Gen10 Configuration Guide at the **Hewlett Packard Enterprise website**.

Use the M.2 SSD slot on the system board or on the optional M.2/dedicated iLO/serial port enablement board to install an M.2 SSD.

Installing the M.2 NVMe SSD on the system board

NVMe SSDs are directly attached to the PCIe interface and do not have a dedicated hardware RAID engine similar to SAS controllers. This means that RAID configuration for NVMe SSDs is only supported through the operating system.

> **IMPORTANT:**
> When installing HPE 400 GB NVMe x4 MU M.2 22110 DS SSD (875583-B21) and HPE 480 GB NVMe x4 RI M.2 22110 DS SSD (875579-001) modules, the supporting ambient temperature should be under 30°C (86°F).

Prerequisites

Before you perform this procedure, make sure that you have the following tools available:

- T-15 Torx screwdriver
- 4.5 mm hex nut screwdriver
- Phillips No. 1 screwdriver

Procedure

1. If installed, remove the front bezel.
2. Power down the server.
3. Remove all power:
   a. Disconnect each power cord from the power source.
   b. Disconnect each power cord from the server.

4. Disconnect all peripheral cables from the server.
5. Remove the server from the rack.
6. Remove the access panel.
7. If an expansion board is installed in the riser board slot 1, remove the riser cage.
8. Remove the M.2 air guider.

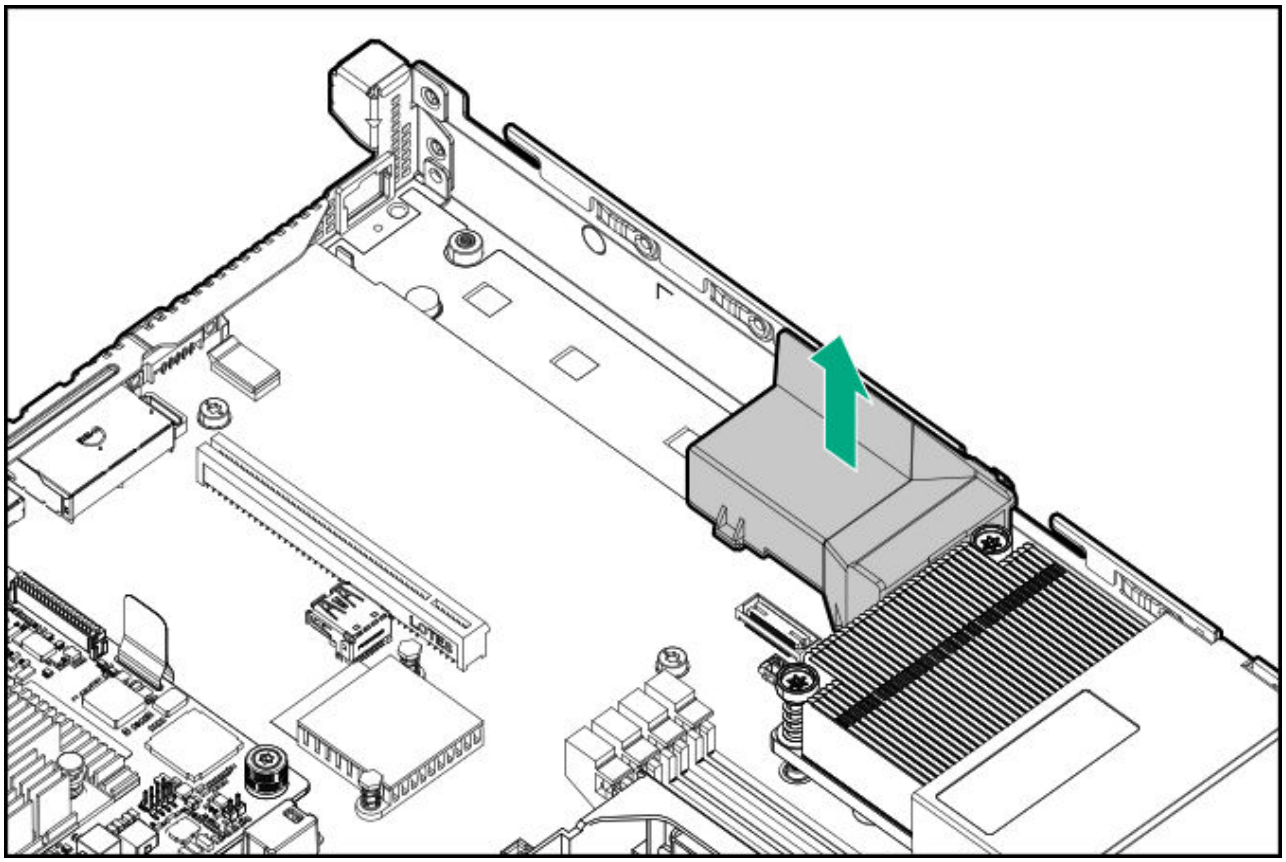

9. Identify the M.2 SSD type to be installed, and then locate the standoff position corresponding to that type.
10. Do one of the following:
    - For M.2 2242 or 2280 SSD installation, remove the hex nut and Phillips screw.

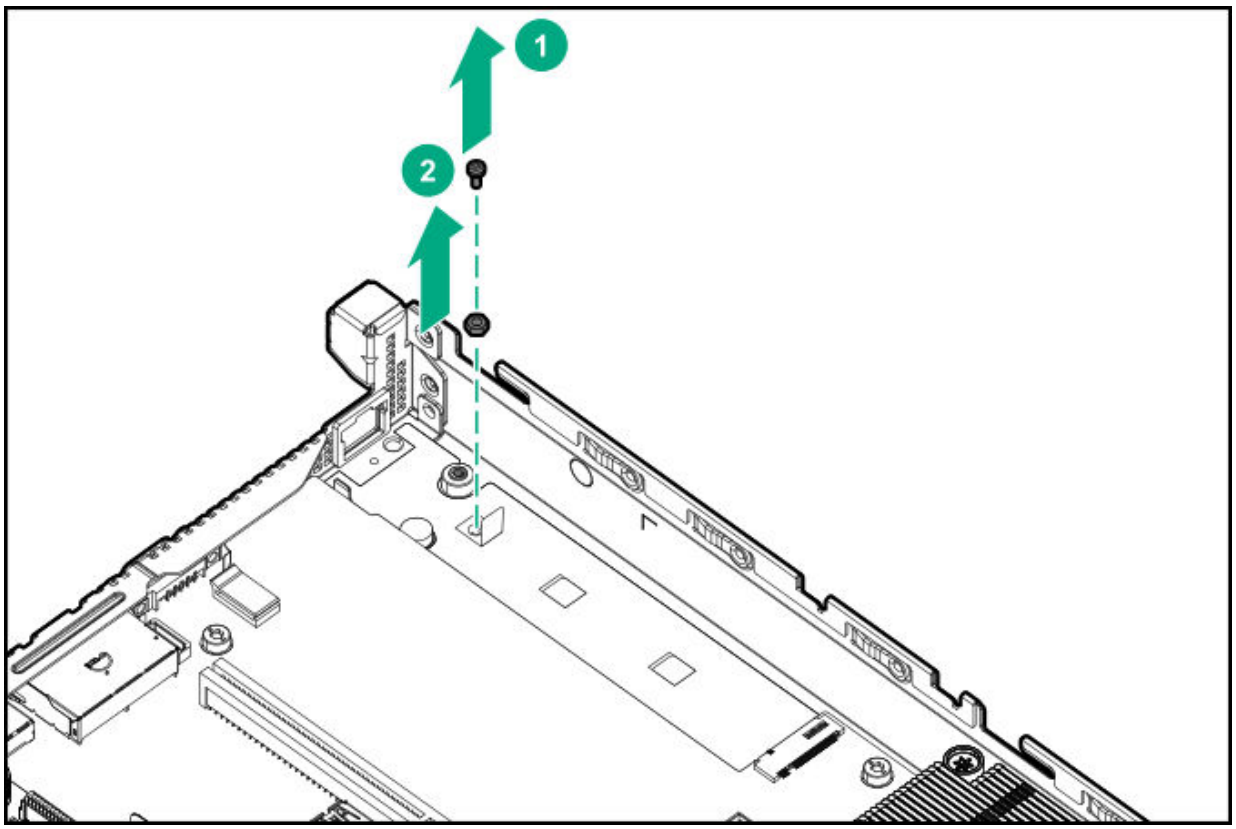

- For M.2 22110 SSD installation, remove the Phillips screw.

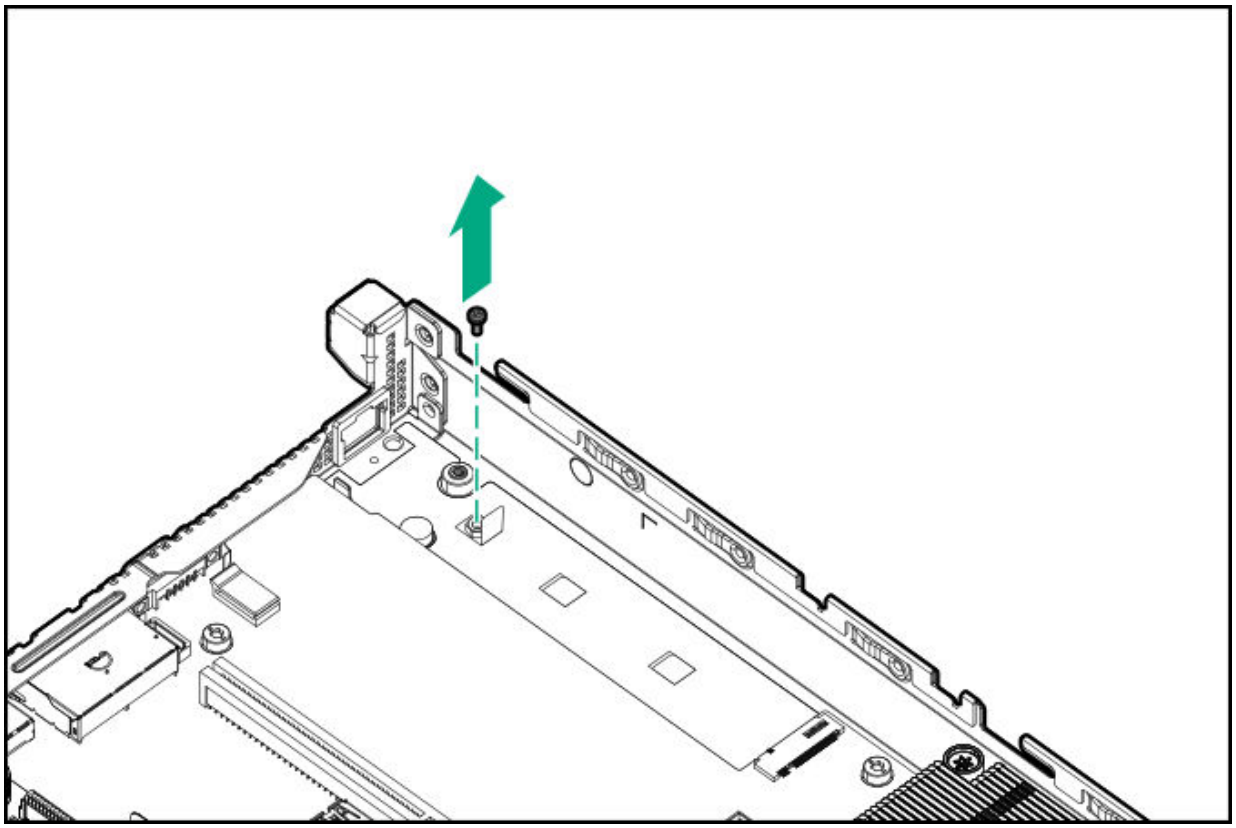

.1. Install the hex standoff on the 2242 or 2280 standoff position on the system board.

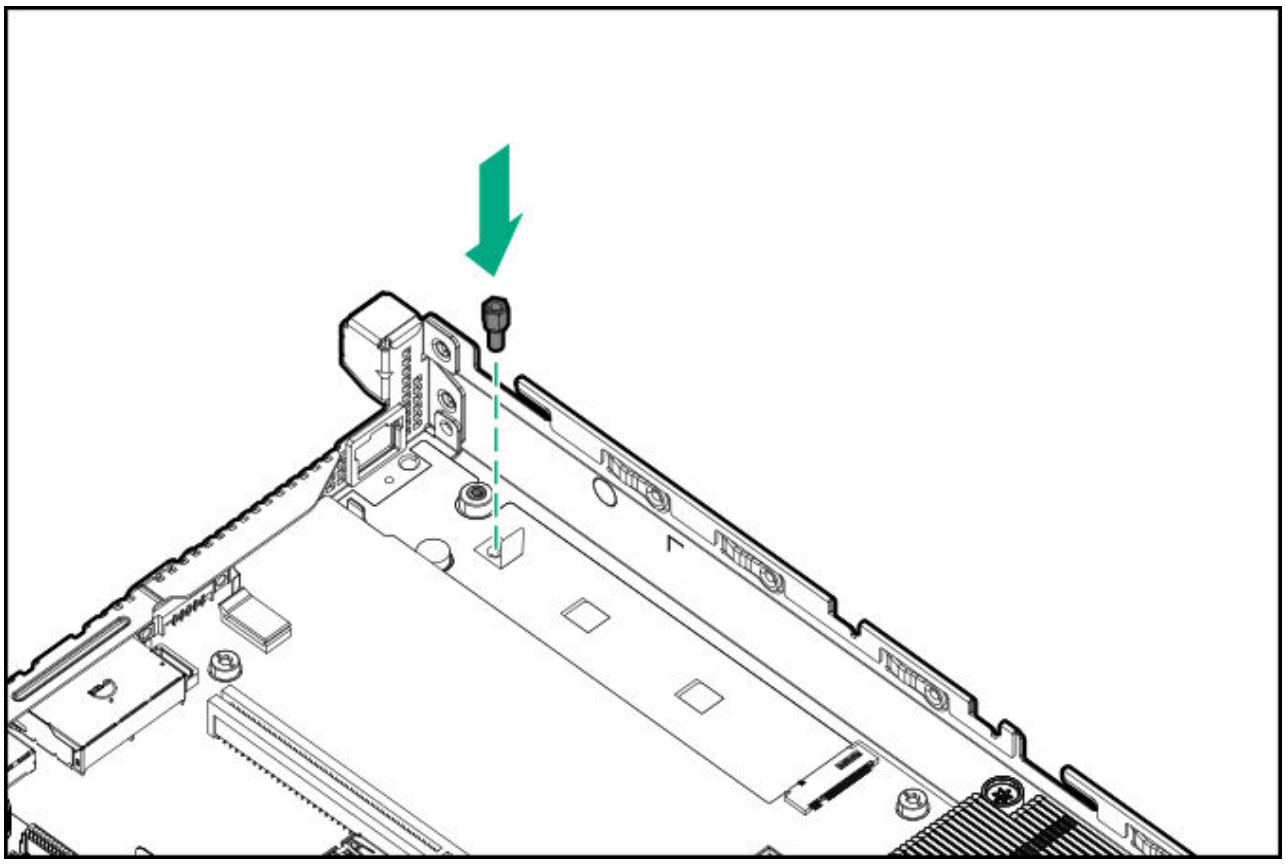

.2. Install an M.2 NVMe SSD on the system board:

a. Insert the SSD into the M.2 slot at a 45° angle.

b. Carefully press the SSD down to the horizontal position.

c. Install the SSD mounting screw.

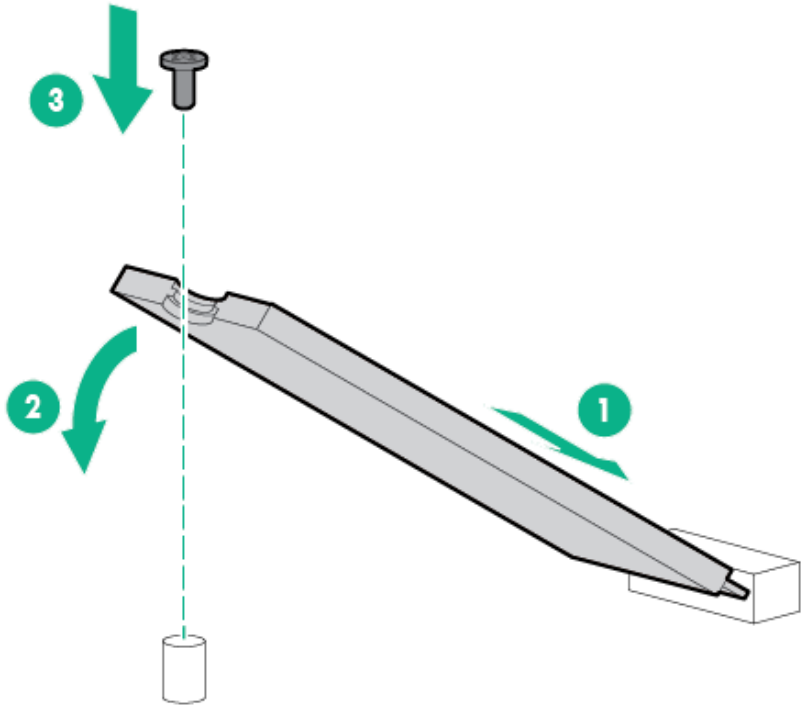

.3. If removed, install the riser cage.

.4. Install the M.2 air guider.

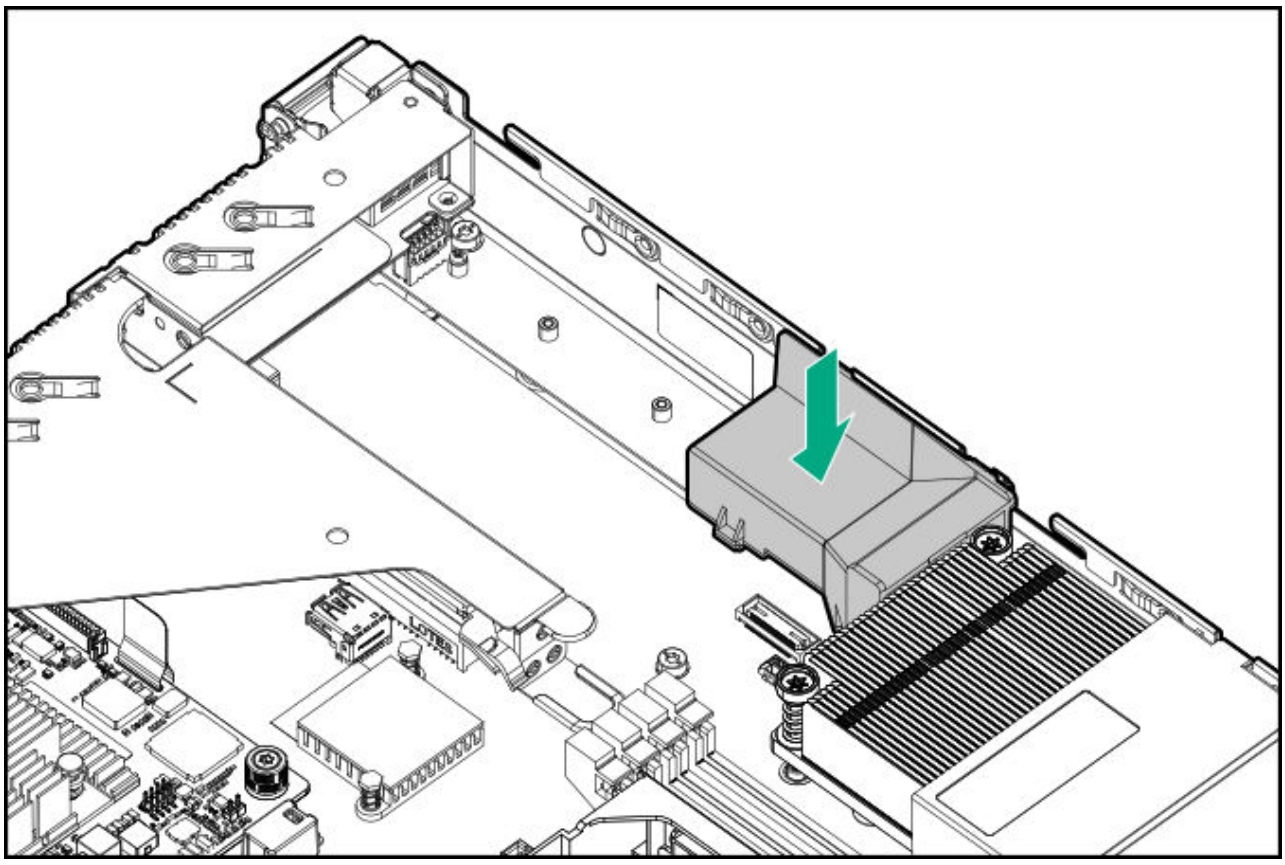

5. Install the access panel.
6. Install the server into the rack.
7. Connect all peripheral cables to the server.
8. Connect the power cords:
    a. Connect each power cord to the server.
    b. Connect each power cord to the power source.
9. Power up the server.
10. If removed, install the front bezel.

The installation is complete.

Installing an M.2 NVMe SSD on the M.2 SSD/dedicated iLO/serial port enablement board

NVMe SSDs are directly attached to the PCIe interface and do not have a dedicated hardware RAID engine similar to SAS controllers. This means that RAID configuration for NVMe SSDs is only supported through the operating system.

> **IMPORTANT:**
> When installing HPE 400 GB NVMe x4 MU M.2 22110 DS SSD (875583-B21) and HPE 480 GB NVMe x4 RI M.2 22110 DS SSD (875579-001) modules, the supporting ambient temperature should be under 30°C (86°F).

Prerequisites

Before you perform this procedure, make sure that you have the following tools available:

- T-15 Torx screwdriver
- 4.5 mm hex nut screwdriver
- Phillips No. 1 screwdriver

Procedure

1. If installed, remove the front bezel.
2. Power down the server.
3. Remove all power:
   a. Disconnect each power cord from the power source.
   b. Disconnect each power cord from the server.
4. Disconnect all peripheral cables from the server.
5. Remove the server from the rack.
6. Remove the access panel.
7. Remove the riser cage.
8. Remove the M.2 air guider.

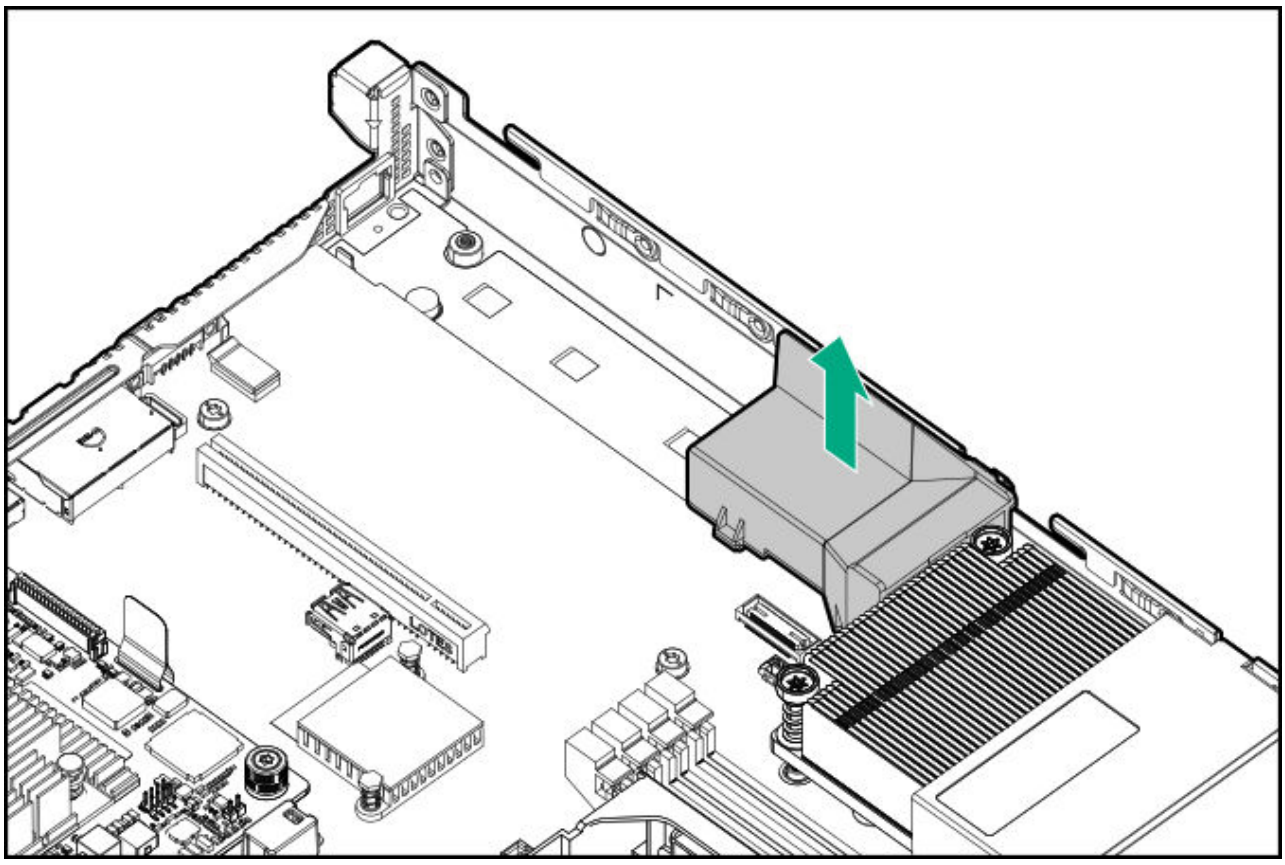

9. Install the M.2 SSD/dedicated iLO/serial port enablement board.
10. Install a hex standoff on the enablement board position corresponding to the type of M.2 SSD to be installed.

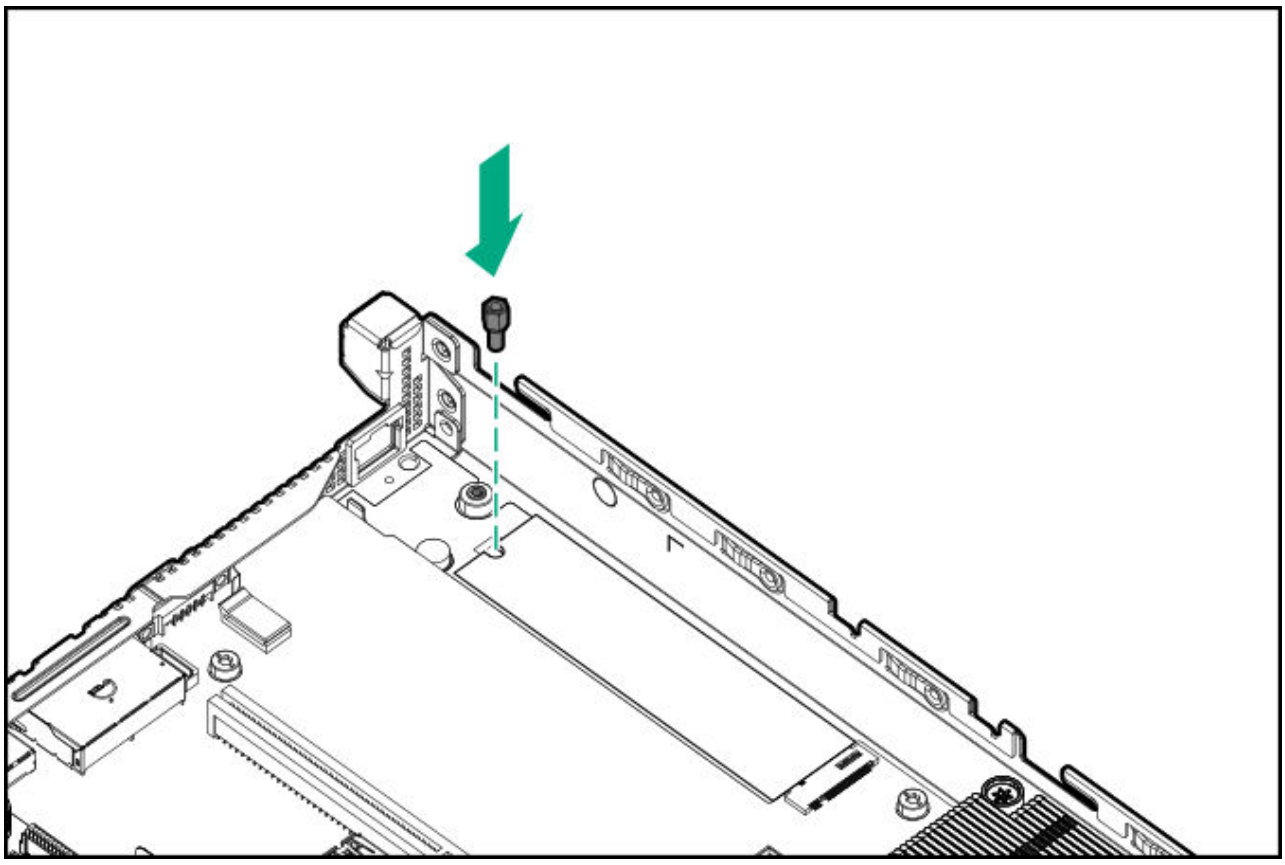

.1. Install the M.2 NVMe SSD on the enablement board:

a. Insert the SSD into the M.2 SSD slot at a 45° angle.

b. Carefully press the SSD down to the horizontal position.

c. Install the SSD mounting screw.

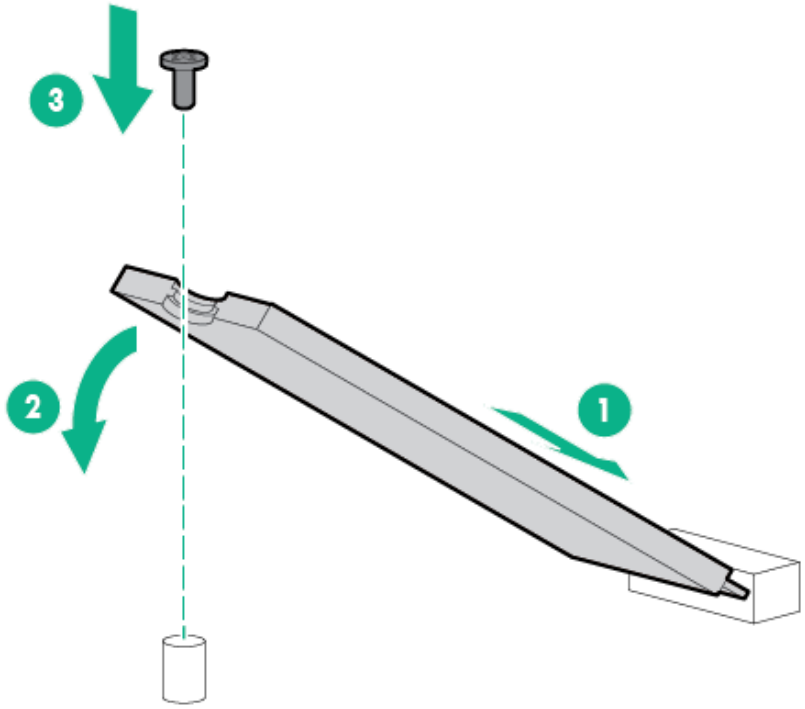

.2. If removed, install the riser cage.

.3. Install the M.2 air guider.

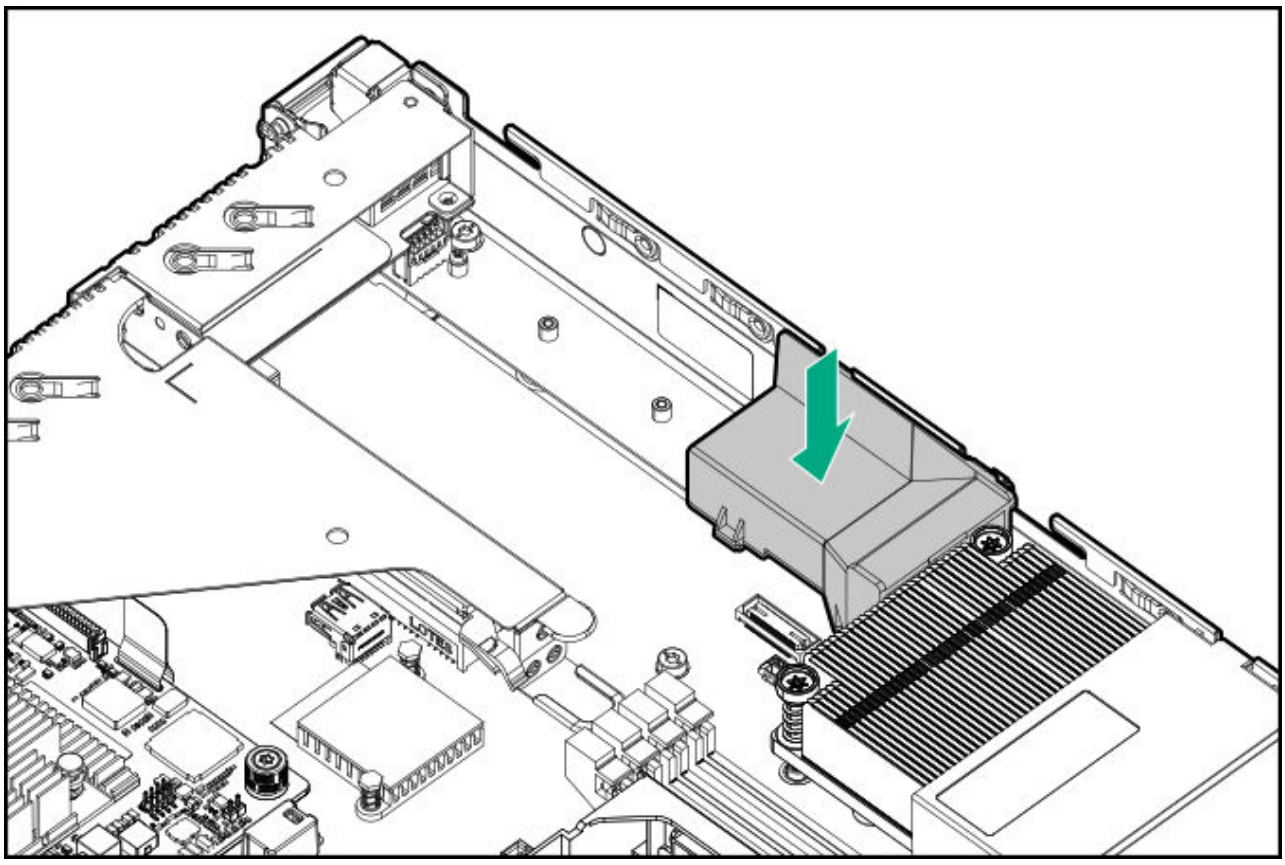

4. Install the access panel.
5. Install the server into the rack.
6. Connect all peripheral cables to the server.
7. Connect the power cords:
   a. Connect each power cord to the server.
   b. Connect each power cord to the power source.
8. Power up the server.
9. If removed, install the front bezel.

The installation is complete.

M.2 SATA SSD enablement option

The server supports the installation of M.2 SATA SSD enablement board. The enablement board can support two M.2 SATA SSDs.

Use the embedded HPE Smart Array S100i SR Gen10 Controller to manage the M.2 SATA SSDs. The S100i SR Gen10 SW RAID support requires that the server boot mode be set to UEFI.

Installing an M.2 SATA SSD

The M.2 SATA expansion board supports 2280 or 22110 M.2 SSDs only.

Prerequisites

Before you perform this procedure, make sure that you have the following tools available:

- T-15 Torx screwdriver
- Phillips No. 1 screwdriver

Procedure

1. If installed, remove the front bezel.
2. Power down the server.
3. Remove all power:
   a. Disconnect each power cord from the power source.
   b. Disconnect each power cord from the server.
4. Disconnect all peripheral cables from the server.
5. Remove the server from the rack.
6. Remove the access panel.
7. Remove the riser cage.
8. If you are installing the M.2 SATA SSD enablement board in the PCIe riser slot 1, do the following:
   a. Remove the full-height bracket from the enablement board.

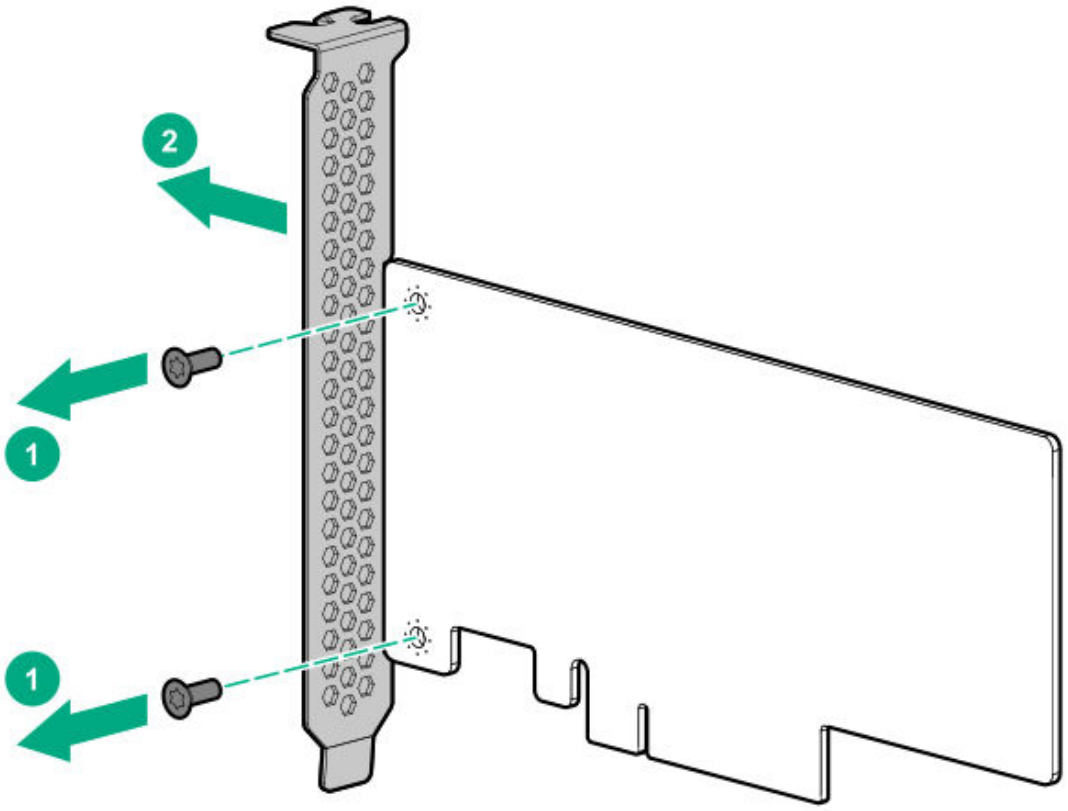

b. Install the low-profile bracket on the enablement board.

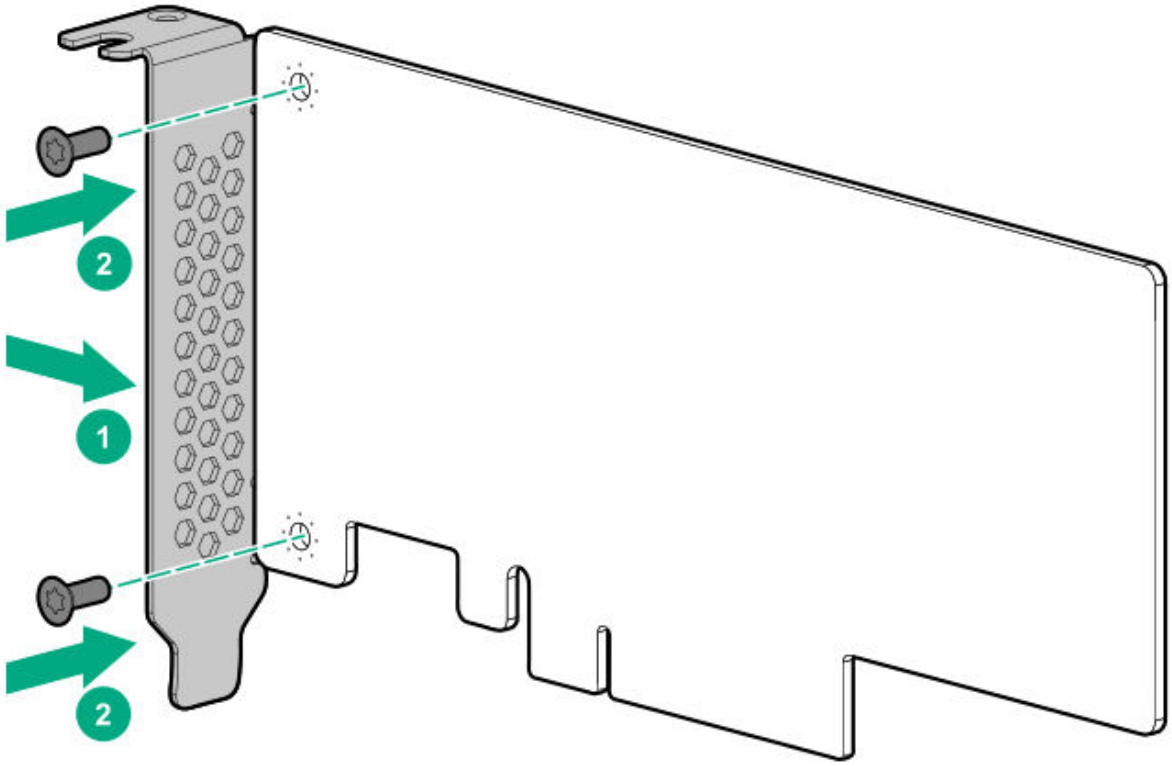

9. Install the M.2 SATA SSD on the enablement board:
    a. If only one SSD is being installed, install the SSD in the enablement board slot 1.
    b. Insert the SSD into the SSD slot at a 45° angle.
    c. Carefully press the SSD down to the horizontal position.
    d. Install the SSD mounting screw.

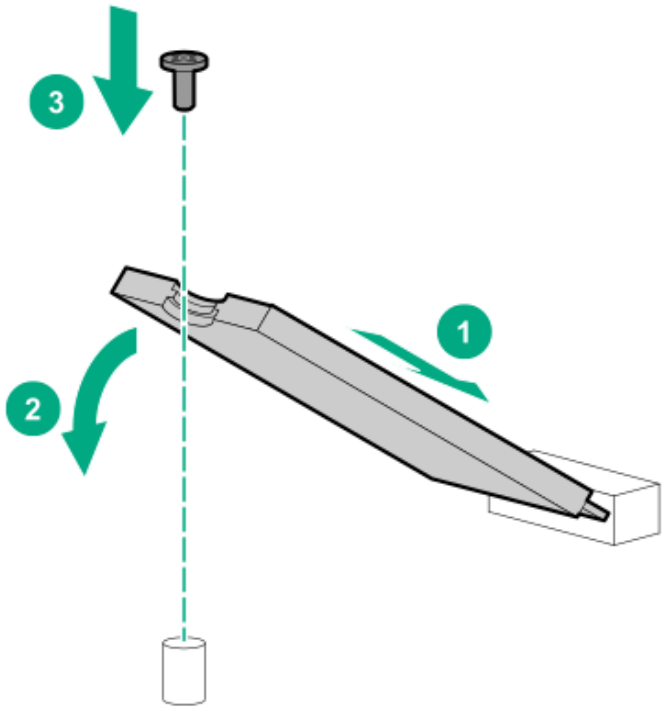

    e. If you are installing a second SSD, repeat steps b–d.

.0. Install the M.2 SATA SSD enablement board.

- PCIe riser slot 1

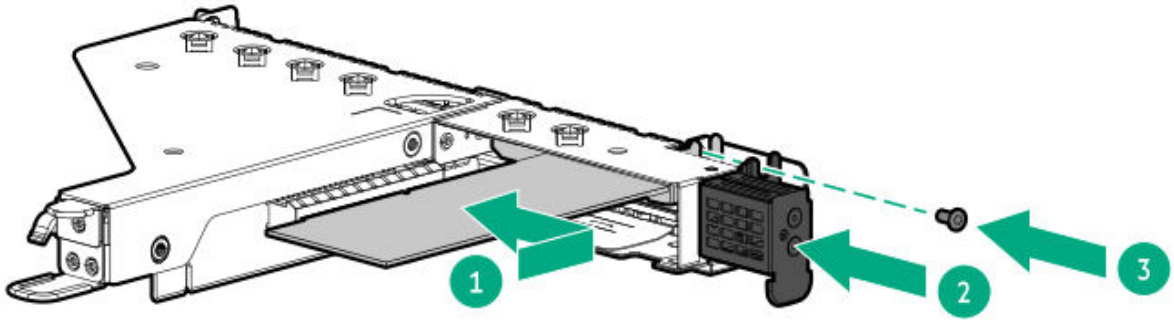

- PCIe riser slot 2

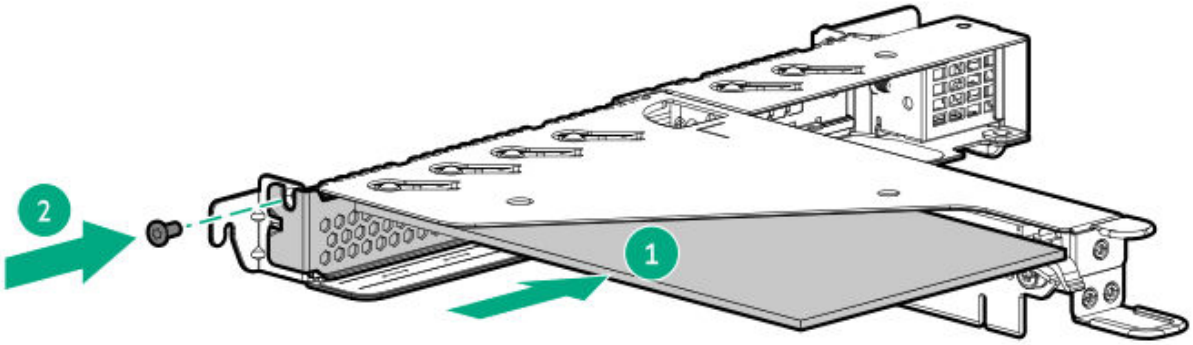

1. Install the riser cage.
2. Connect the M.2 SATA cables.
3. Install the access panel.
4. Install the server into the rack.
5. Connect all peripheral cables to the server.
6. Connect the power cords:
   a. Connect each power cord to the server.
   b. Connect each power cord to the power source.
7. Power up the server.
8. If removed, install the front bezel.

The installation is complete.

To configure the M.2 SATA SSDs, see the HPE Smart Array SR Gen10 Configuration Guide at the **Hewlett Packard Enterprise website**.

Storage controller options

The server supports following storage controllers:

- For SATA drives only – Embedded HPE Smart Array S100i SR Gen10 Controller
- For SAS and SATA drives:
  - Type-a modular Smart Array controller (AROC)
  - Type-p standup plug-in Smart Array controller

Installing a modular Smart Array controller option (type-a, AROC)

Prerequisites

- Before you perform this procedure, perform the following steps:
  1. Back up data on the system.
  2. Close all applications.
  3. Update the server firmware if it is not the latest revision.
  4. Do one of the following:
     - If the new Smart Array is the new boot device, install the device drivers.
     - If the new Smart Array is not the new boot device, go to the next step.
  5. Ensure that users are logged off and that all tasks are completed on the server.

  CAUTION: In systems that use external data storage, be sure that the server is the first unit to be powered down and the last to be powered back up. Taking this precaution ensures that the system does not erroneously mark the drives as failed when the server is powered up.
- Before you perform this procedure, make sure that you have a T-15 Torx screwdriver available.

Procedure

1. If installed, remove the front bezel.
2. Power down the server.
3. Remove all power:
   a. Disconnect each power cord from the power source.
   b. Disconnect each power cord from the server.
4. Disconnect all peripheral cables from the server.
5. Remove the server from the rack.
6. Remove the access panel.
7. Remove the riser cage.
8. Install the modular storage controller:
   a. Insert the alignment pins on the system board through the holes on the controller board.
   b. Press on the area of the controller board marked as PRESS TO INSTALL to ensure that the board is firmly seated in the slot.
   c. Tighten the controller board thumbscrews.

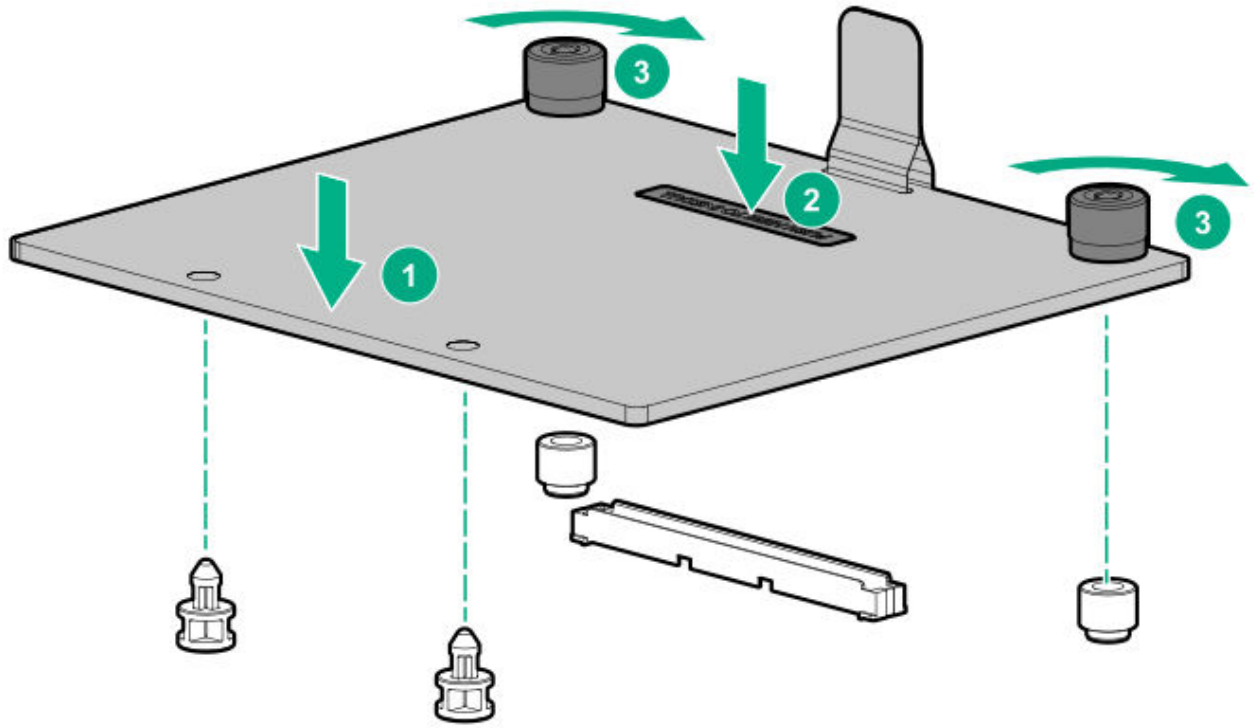

9. Cable the controller.
10. Install the riser cage.
11. Install the access panel.
12. Install the server into the rack.
13. Connect all peripheral cables to the server.
14. Connect the power cords:
    a. Connect each power cord to the server.
    b. Connect each power cord to the power source.
15. Configure the controller.
16. If removed, install the front bezel.

The installation is complete.

Installing a Smart Array standup storage controller

Prerequisites

- To determine the slot compatibility for the storage controller, review the PCIe expansion slot population rules.
- Before you perform this procedure, perform the following steps:

1. Back up data on the system.
2. Close all applications.
3. Update the server firmware if it is not the latest revision.
4. Do one of the following:
    - If the new Smart Array is the new boot device, install the device drivers.
    - If the new Smart Array is not the new boot device, go to the next step.
5. Ensure that users are logged off and that all tasks are completed on the server.

CAUTION: In systems that use external data storage, be sure that the server is the first unit to be powered down and the last to be powered back up. Taking this precaution ensures that the system does not erroneously mark the drives as failed when the server is powered up.

- If you are installing a Smart Array type-p Gen10 controller, an energy pack option is required.
- Before you perform this procedure, make sure that you have a T-10 Torx screwdriver available.

Procedure

1. If installed, remove the front bezel.
2. Power down the server.
3. Remove all power:
   a. Disconnect each power cord from the power source.
   b. Disconnect each power cord from the server.
4. Disconnect all peripheral cables from the server.
5. Remove the server from the rack.
6. Remove the access panel.
7. Remove the riser cage.
8. Identify the expansion slot compatible with the option, see PCIe riser slot definitions.
9. If you are installing the controller in the PCIe riser slot 1, do the following:
   a. Remove the full-height bracket from the controller.

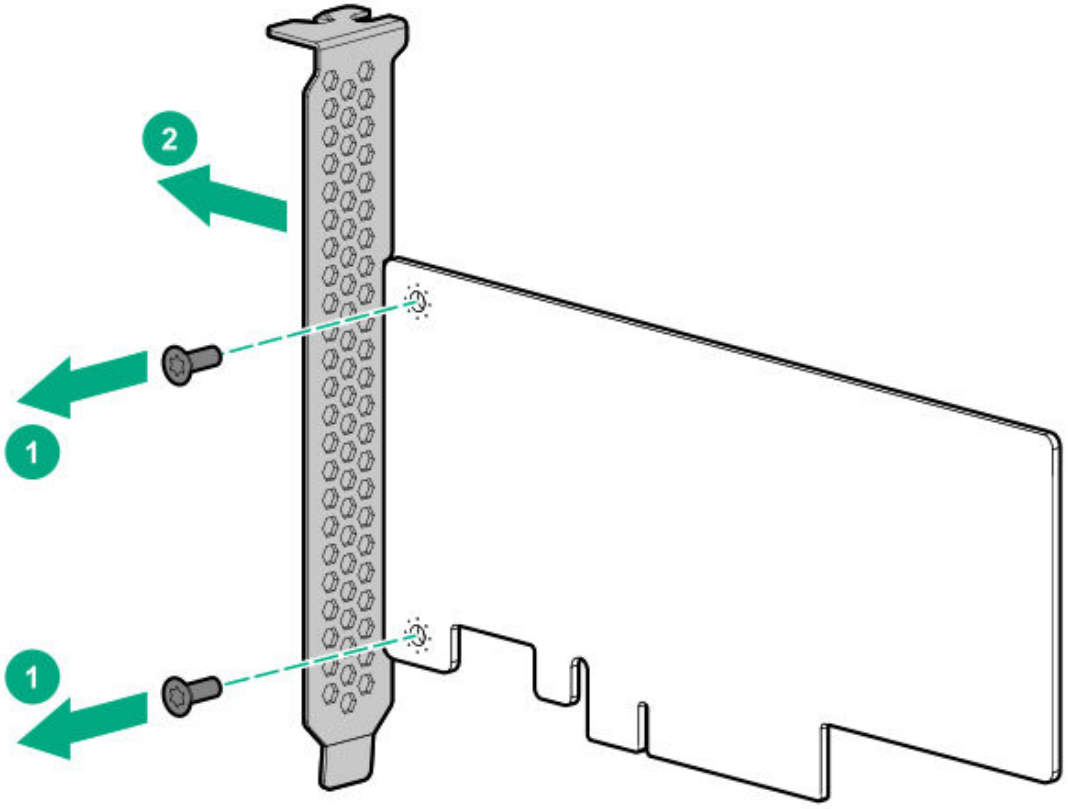

b. Install the low-profile bracket on the controller.

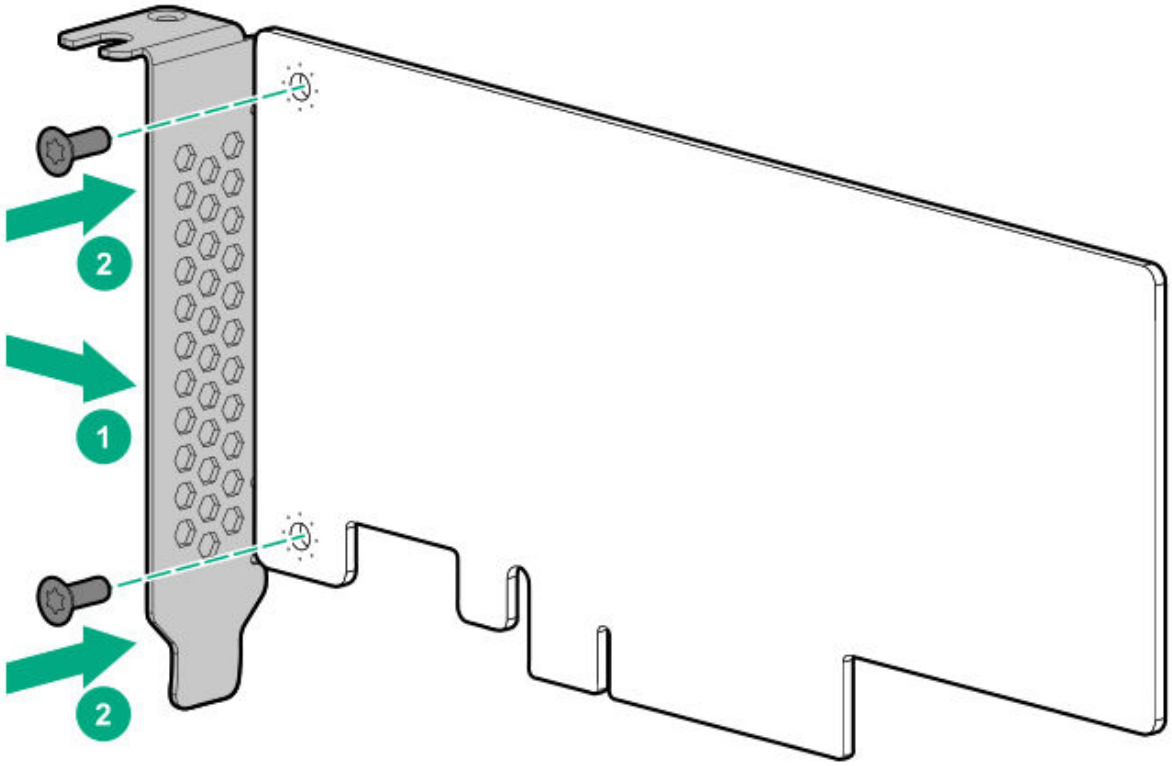

.0. Remove the riser slot blank.

- Riser slot 1

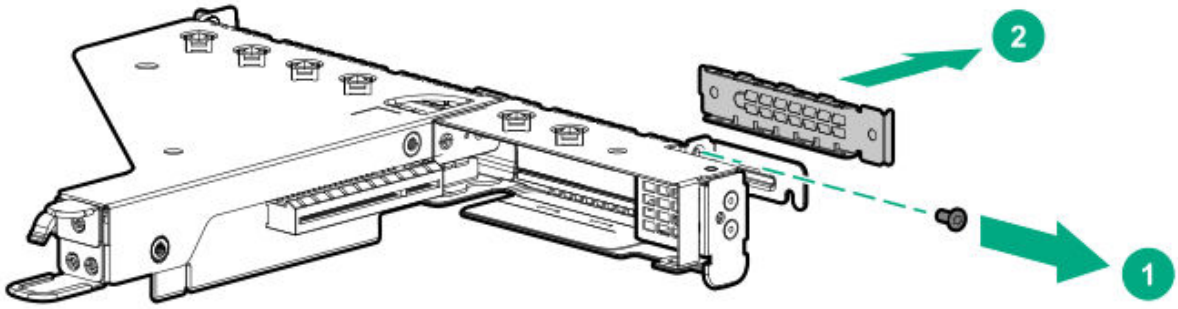

- Riser slot 2

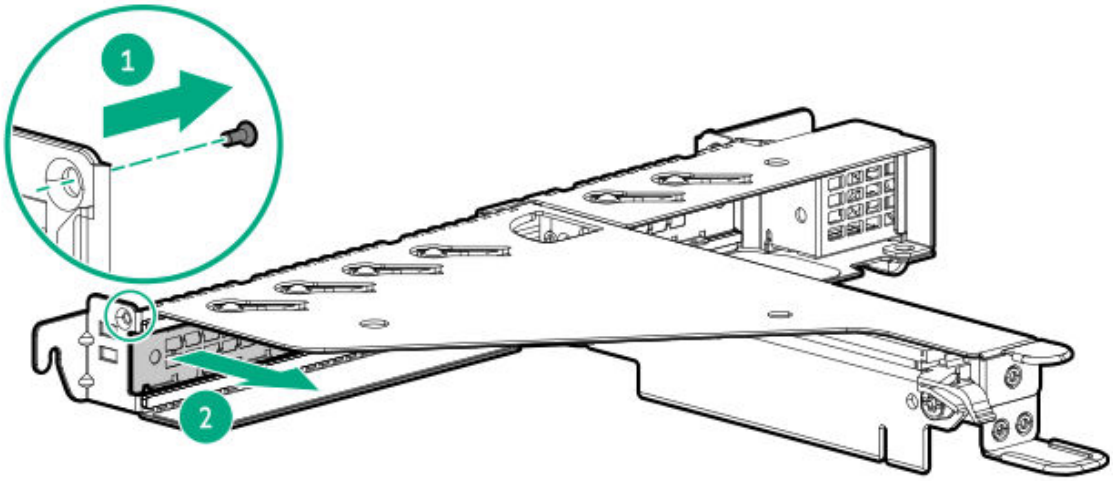

Retain the screw for future use.

.1. Install the controller.

- Riser slot 1

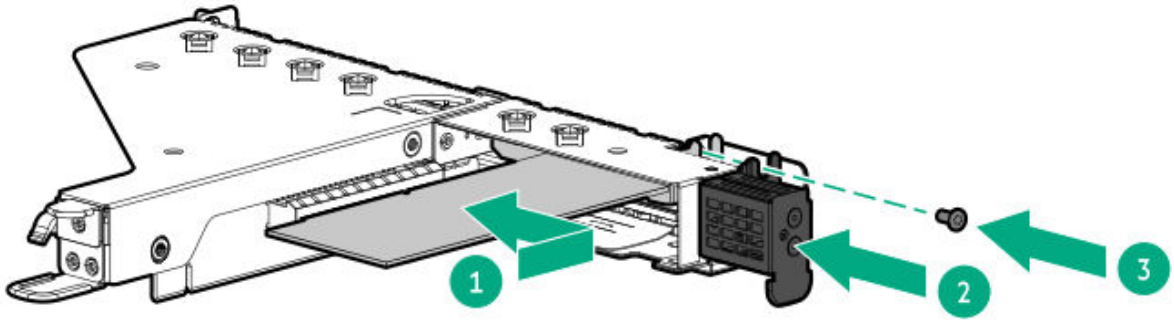

- Riser slot 2

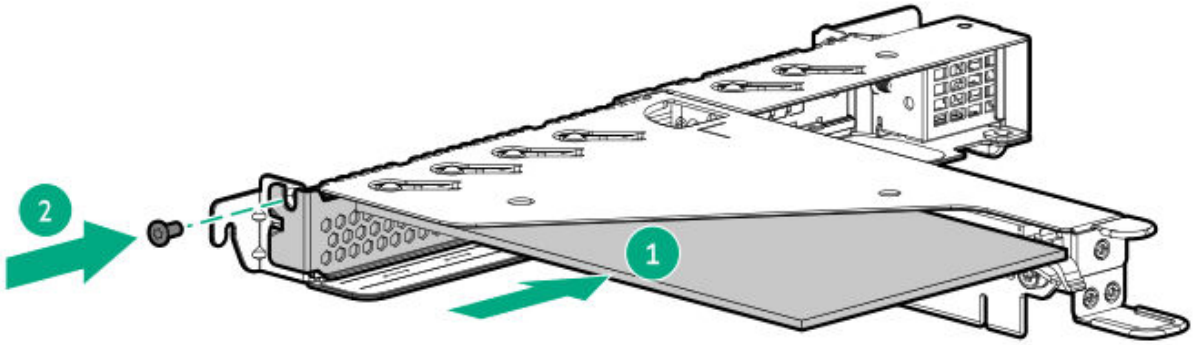

.2. Cable the controller.

.3. To enable HPE Smart Array SR SmartCache in a Smart Array type-p Gen10 controller, install an energy pack.

SmartCache and CacheCade enable solid-state drives to be used as caching devices for hard drive media. These features accelerate access to frequently used data by caching hot data from the hard drives onto the solid-state drives.

.4. Install the riser cage.

.5. Install the access panel.

.6. Install the server into the rack.

.7. Connect all peripheral cables to the server.

.8. Connect the power cords:

a. Connect each power cord to the server.

b. Connect each power cord to the power source.

9. Configure the controller.
10. If removed, install the front bezel.

The installation is complete.

Configuring an HPE Smart Array Gen10 controller

Procedure

1. Power up the server.
2. If you are running the server in UEFI Boot Mode, select the boot options.
3. Update the drive firmware if it is not the latest revision.
4. (Optional) If running the server in Legacy Boot Mode, set the controller as the boot controller.
5. (Optional) If running the server in Legacy Boot Mode, change the controller boot order.
6. If the new controller is not the new boot device, install the device drivers.
7. If the controller firmware is not the latest version, use SPP to update it.
8. Use UEFI System Utilities or HPE Smart Storage Administrator (HPE SSA) to create arrays and logical drives.

See the following resources for more information:

- SPP – See the product documentation on the Hewlett Packard Enterprise website:

  http://www.hpe.com/info/spp/docs

- UEFI System Utilities or HPE Smart Storage Administrator – See the HPE Smart Array SR Gen10 Configuration Guide on the Hewlett Packard Enterprise website:

  http://www.hpe.com/info/smartstorage-docs

Energy pack option

Hewlett Packard Enterprise offers a centralized backup power source option to back up write cache content on P-class Smart Array controllers in case of an unplanned server power outage.

One energy pack option can support multiple devices. An energy pack option is required for P-class Smart Array controllers. Once installed, the status of the energy pack displays in HPE iLO. For more information, see the HPE iLO user guide on the Hewlett Packard Enterprise website (**https://www.hpe.com/support/ilo-docs**).

HPE Smart Storage Battery

The HPE Smart Storage Battery supports the following devices:

- HPE Smart Array SR controllers

After the battery is installed, it might take up to two hours to charge. Controller features requiring backup power are not re-enabled until the battery is capable of supporting the backup power.

This server supports the 12 W HPE Smart Storage Battery with the 230 mm cable.

Installing an energy pack

Procedure

1. If installed, remove the front bezel.
2. Power down the server.
3. Remove all power:
   a. Disconnect each power cord from the power source.
   b. Disconnect each power cord from the server.
4. Disconnect all peripheral cables from the server.
5. Remove the server from the rack.
6. Remove the access panel.
7. Install the energy pack.

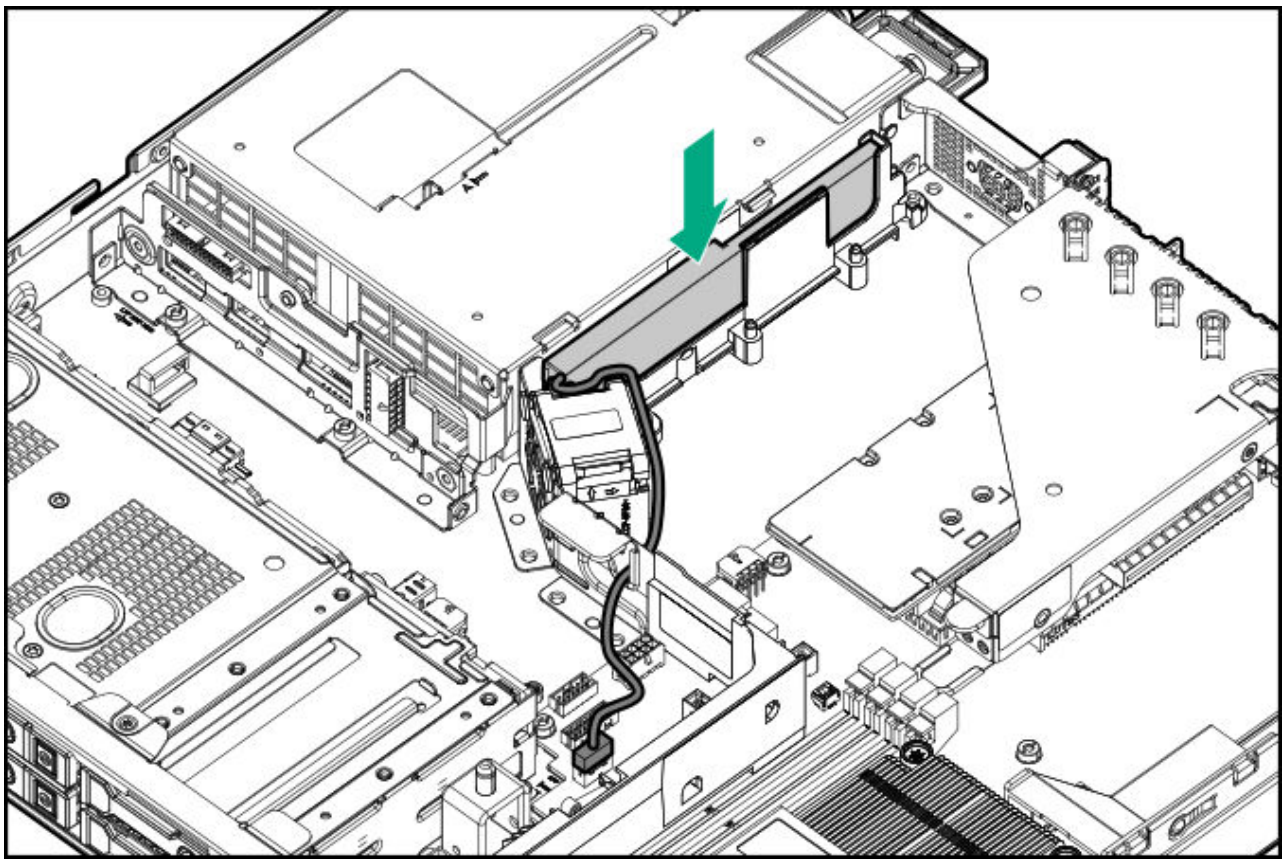

CAUTION:

To prevent improper airflow that can lead to thermal damage, make sure to secure the energy pack cable in the metal tab as shown in the cabling illustration.

8. Connect the energy pack cable.
9. Connect the storage controller backup power cable.
10. Install the access panel.
11. Install the server into the rack.
12. Connect all peripheral cables to the server.
13. Connect the power cords:
    a. Connect each power cord to the server.
    b. Connect each power cord to the power source.
14. Power up the server.
15. If removed, install the front bezel.

The installation is complete.

Expansion card options

The server supports the installation of full-height, half-length and half-height, half-length (low-profile) PCIe expansion / add-in (AIC) cards such as:

- HPE type-p storage controller
- Ethernet adapter
- HDR InfiniBand adapter
- Fibre channel host bus adapter (FC HBA)
- Accelerator (workload, computational, or graphics accelerator)

For more information on the expansion options supported by the server, see the server QuickSpecs on the Hewlett Packard Enterprise website:

https://www.hpe.com/servers/dl20-gen10

PCIe expansion slot population rules

Observe the following guidelines when installing expansion options in the riser cage:

- To check the electrical compatibility of the expansion option with the riser slot, review the PCIe riser slot definitions.
- Network adapter option: Due to the mechanical design of the riser cage, install a four-port network adapter with a full-height bracket in the riser slot 2.
- Storage controller option: Install a type-p storage controller in either riser slot 1 or 2.

Installing an expansion board

Prerequisites

- To determine the slot compatibility for the expansion option, review the PCIe expansion slot population rules.
- Before you perform this procedure, make sure that you have a T-10 Torx screwdriver available.

Procedure

1. If installed, remove the front bezel.
2. Power down the server.
3. Remove all power:
   a. Disconnect each power cord from the power source.
   b. Disconnect each power cord from the server.
4. Disconnect all peripheral cables from the server.
5. Remove the server from the rack.
6. Remove the access panel.
7. Remove the riser cage.
8. Identify the expansion slot compatible with the option.
9. If you are installing the expansion board in the PCIe riser slot 1, do the following:
   a. Remove the full-height bracket from the expansion board.

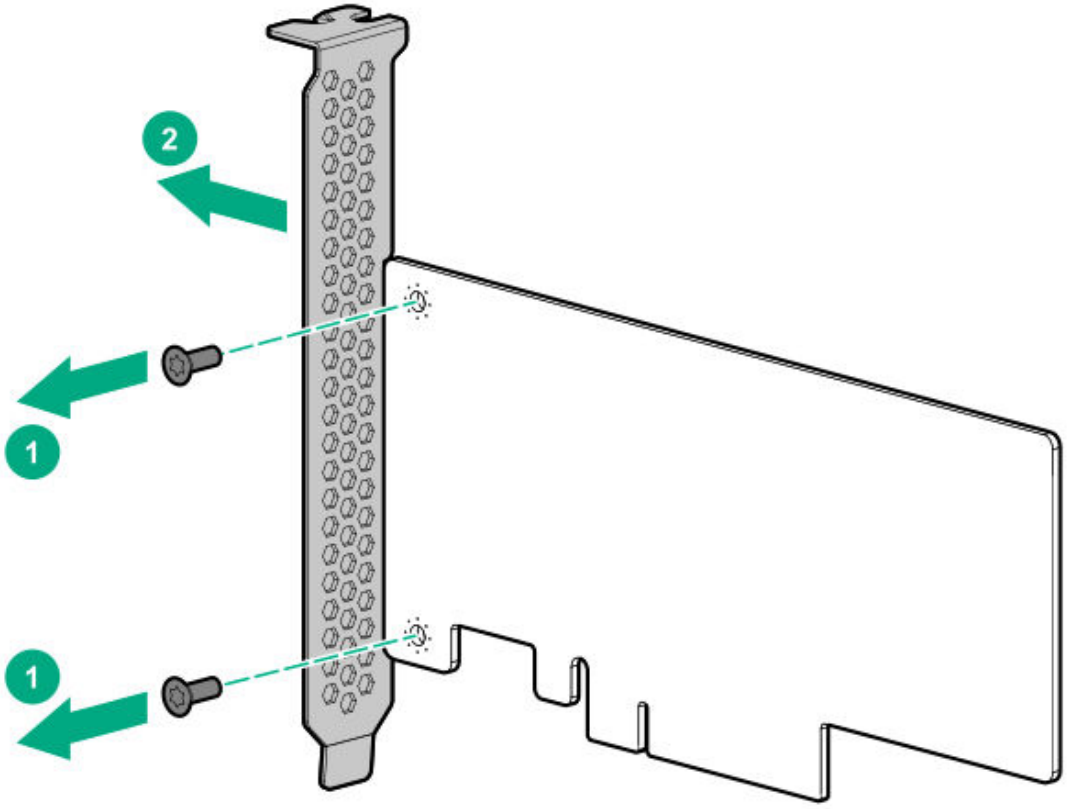

b. Install the low-profile bracket on the expansion board.

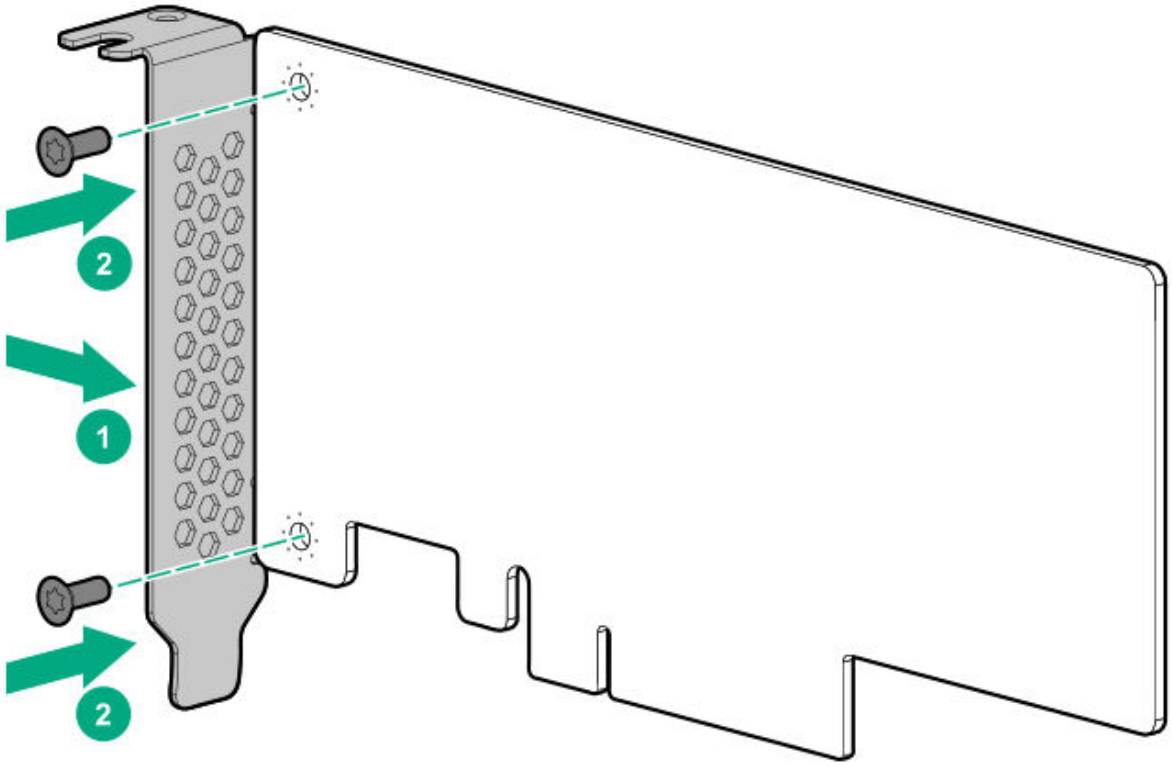

.0. Remove the riser slot blank.

- Riser slot 1

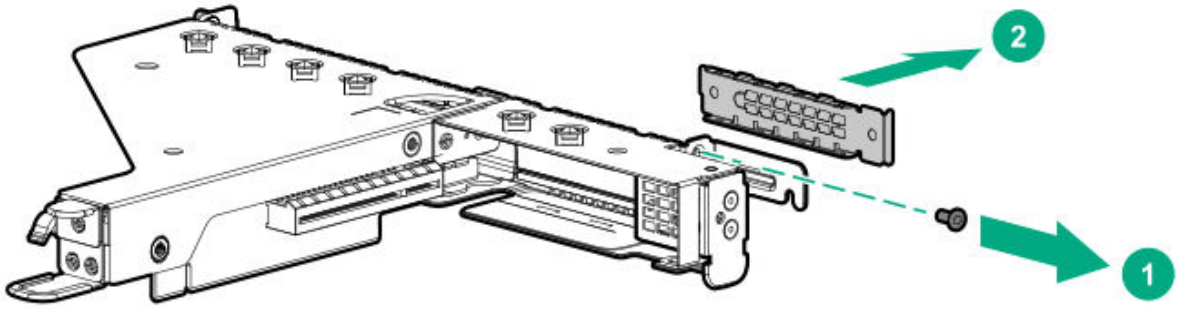

- Riser slot 2

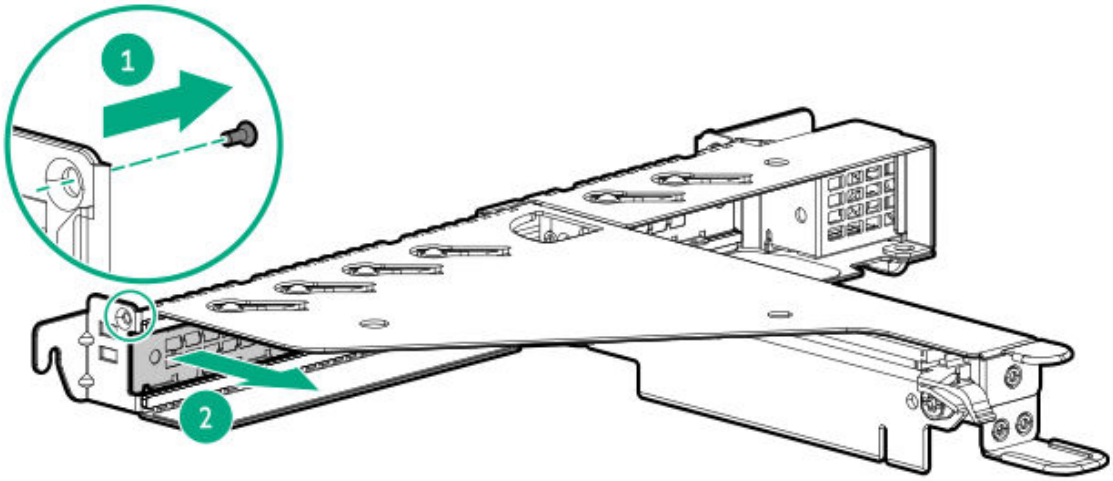

Retain the screw for future use.

.1. Make sure that any switches or jumpers on the expansion board are set properly.

For more information, see the documentation that ships with the option.

.2. Install the expansion board.

- Riser slot 1

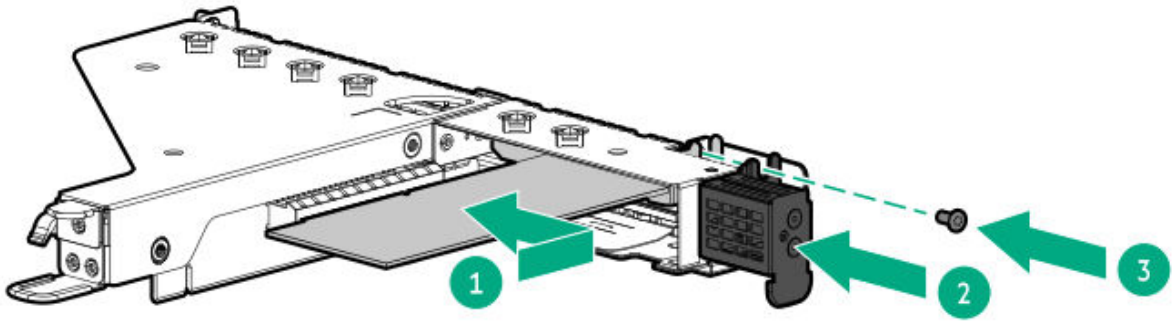

- Riser slot 2

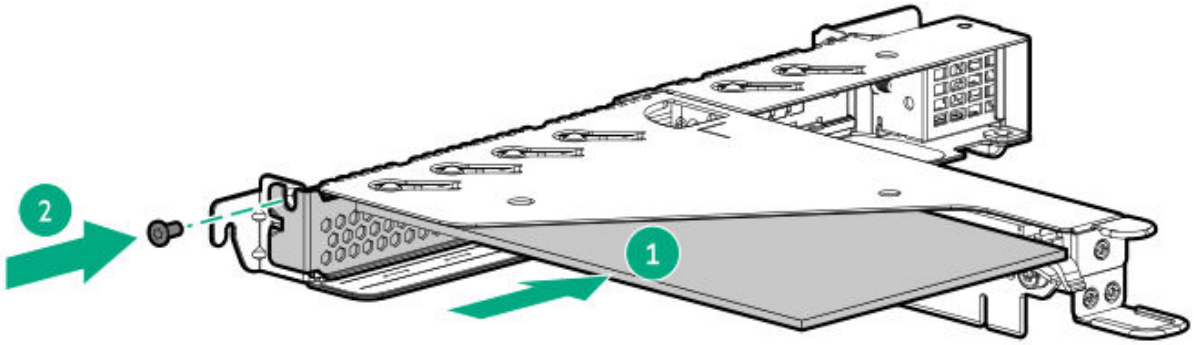

3. Install the riser cage.
4. Connect all necessary internal cabling to the expansion board.

   For more information on these cabling requirements, see the documentation that ships with the option.
5. Install the access panel.
6. Install the server into the rack.
7. Connect all necessary external cabling to the new expansion board.

   For more information on these cabling requirements, see the documentation that ships with the option.
8. Connect all peripheral cables to the server.
9. Connect the power cords:
   a. Connect each power cord to the server.
   b. Connect each power cord to the power source.

10. Power up the server.
11. If removed, install the front bezel.

The installation is complete.

Installing the FlexibleLOM adapter

Prerequisites

Before you perform this procedure, make sure that you have a T-10 Torx screwdriver available.

Procedure

1. If installed, remove the front bezel.
2. Power down the server.
3. Remove all power:
    a. Disconnect each power cord from the power source.
    b. Disconnect each power cord from the server.
4. Disconnect all peripheral cables from the server.
5. Remove the server from the rack.
6. Remove the access panel.
7. Remove the FlexibleLOM riser cage.
8. Remove the FlexibleLOM slot blank.

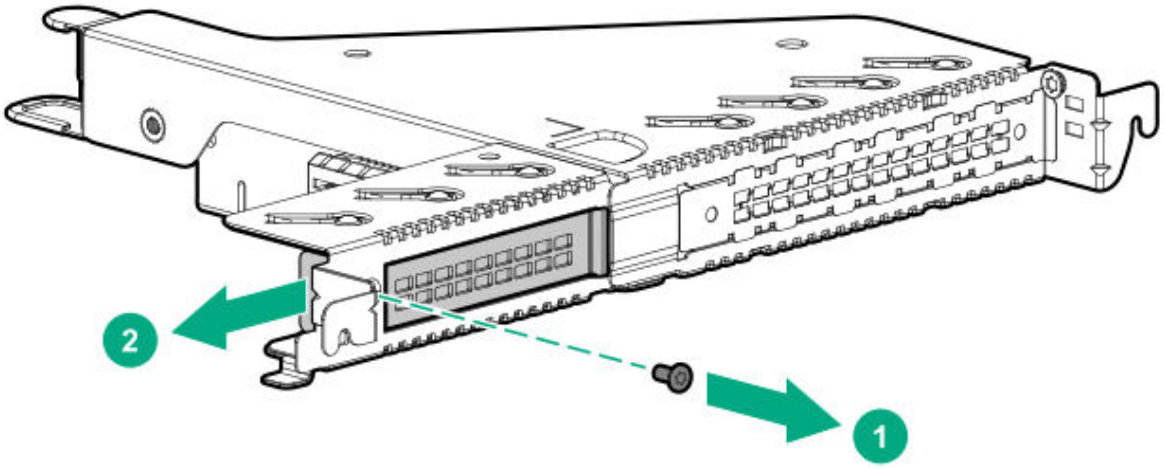

9. Install the FlexibleLOM adapter.

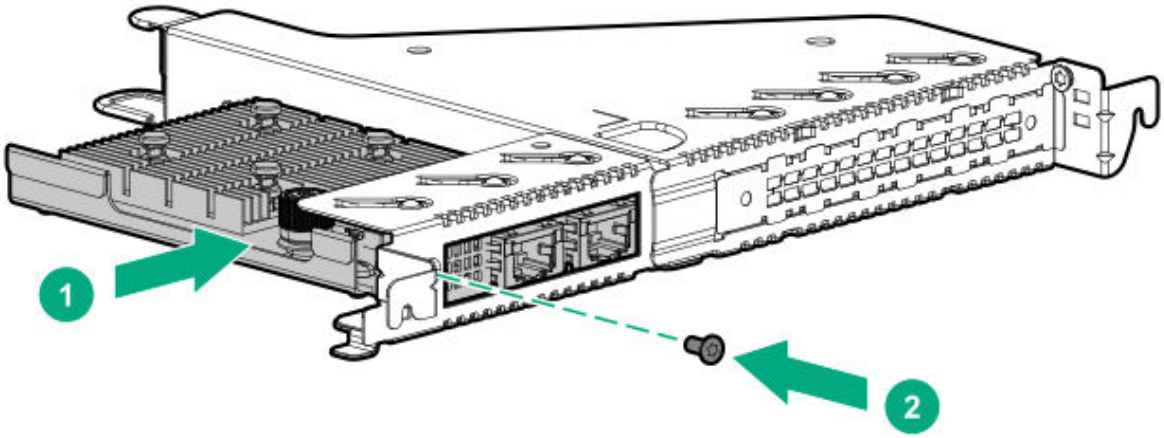

.0. Install the FlexibleLOM riser cage.

.1. Install the access panel.

.2. Install the server into the rack.

.3. Connect all peripheral cables to the server.

.4. Connect the power cords:

   a. Connect each power cord to the server.

b. Connect each power cord to the power source.

.5. Power up the server.

.6. If removed, install the front bezel.

The installation is complete.

Transceiver option

Transceiver warnings and cautions

WARNING:

Fiber-optic transceivers and fiber-optic cables connected to transceivers emit laser light that can damage your eyes. To avoid eye injuries, avoid direct eye exposure to the beam from the fiber-optic transceiver or into the ends of fiber-optic cables when they are powered-up.

CAUTION:

The presence of dust in transceiver ports can cause poor cable connectivity. To prevent dust from entering, install a dust plug in an unused transceiver port.

CAUTION:

Supported transceivers can be hot-swapped—removed and installed while the server is powered-on. However, to prevent potential damage to the transceiver or the fiber-optic cable, disconnect the cable from the transceiver before hot-swapping it.

CAUTION:

Do not remove and install transceivers more often than is necessary. Doing so can shorten the useful life of the transceiver.

IMPORTANT:

When you replace a transceiver with another of a different type, the server might retain selected port-specific configuration settings that were configured for the replaced transceiver. Be sure to validate or reconfigure port settings as required.

Installing a transceiver

Prerequisites

Before installing a transceiver, make sure that you read the following:

- Transceiver warnings and cautions
- Transceiver documentation for specific operational and cabling requirements

Procedure

1. Install the FlexibleLOM riser assembly.
2. Hold the transceiver by its sides and gently insert it in slot 1 of the FlexibleLOM until it clicks into place.

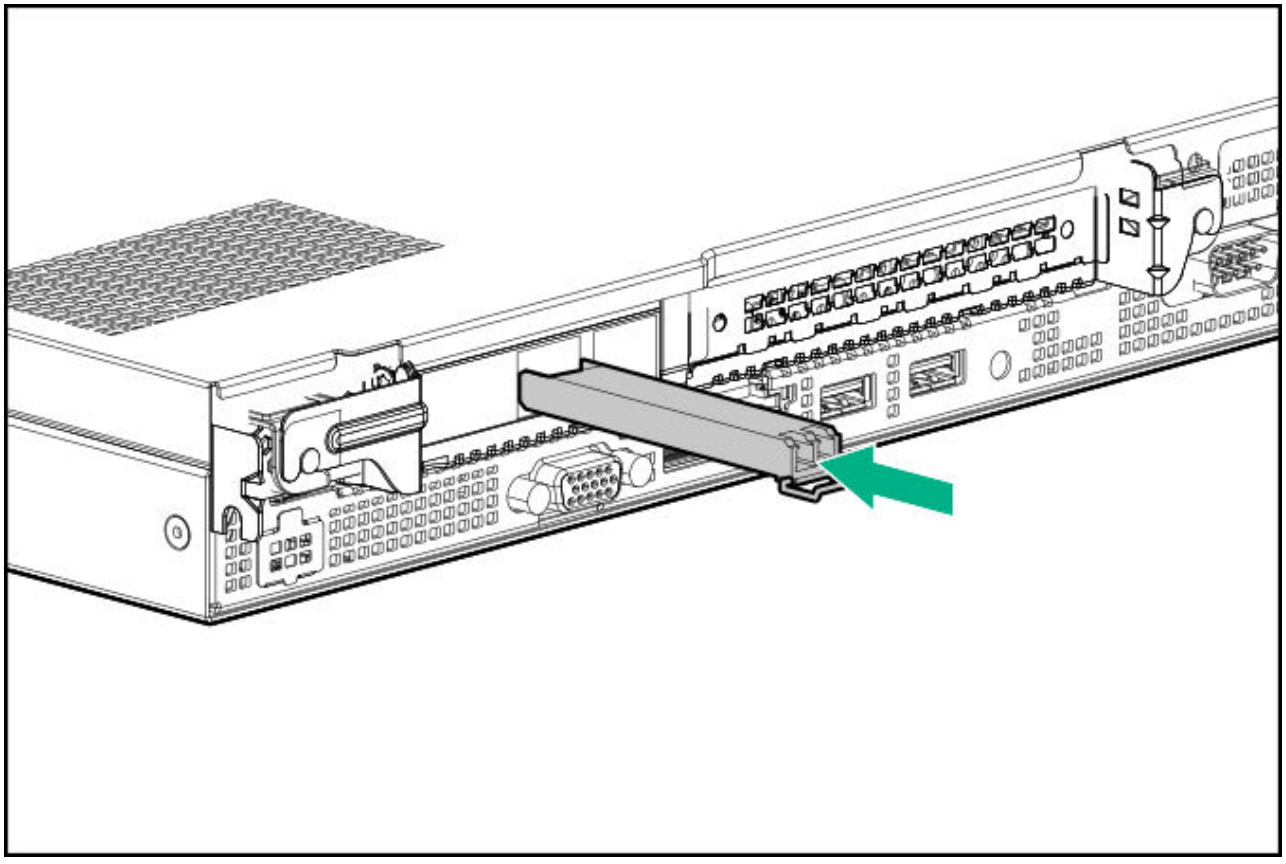

Transceivers are keyed so that they can only be inserted in the correct orientation. If the transceiver does not fit easily into the port, you might have positioned it incorrectly. Reverse the orientation of the transceiver and insert it again.

3. Remove the dust plug or protective cover from the transceiver.
4. Connect a compatible network cable to the transceiver.
5. If needed, see the transceiver documentation for the model-specific fastening mechanism applicable to the transceiver.

The installation is complete.

Chassis intrusion detection switch option

The chassis intrusion detection switch enables iLO to record an event in the Integrated Management Log (IML) whenever the access panel is physically opened or removed. An alert is also sent to the BIOS whenever a chassis intrusion is detected. The chassis intrusion detection occurs as long as the server is plugged in, regardless of whether the server is powered on or off.

Installing the chassis intrusion detection switch

Procedure

1. If installed, remove the front bezel.
2. Power down the server.
3. Remove all power:
   a. Disconnect each power cord from the power source.
   b. Disconnect each power cord from the server.
4. Disconnect all peripheral cables from the server.
5. Remove the server from the rack.
6. Remove the access panel.
7. Install the chassis intrusion detection switch on the DIMM guard and connect the cable to the system board.

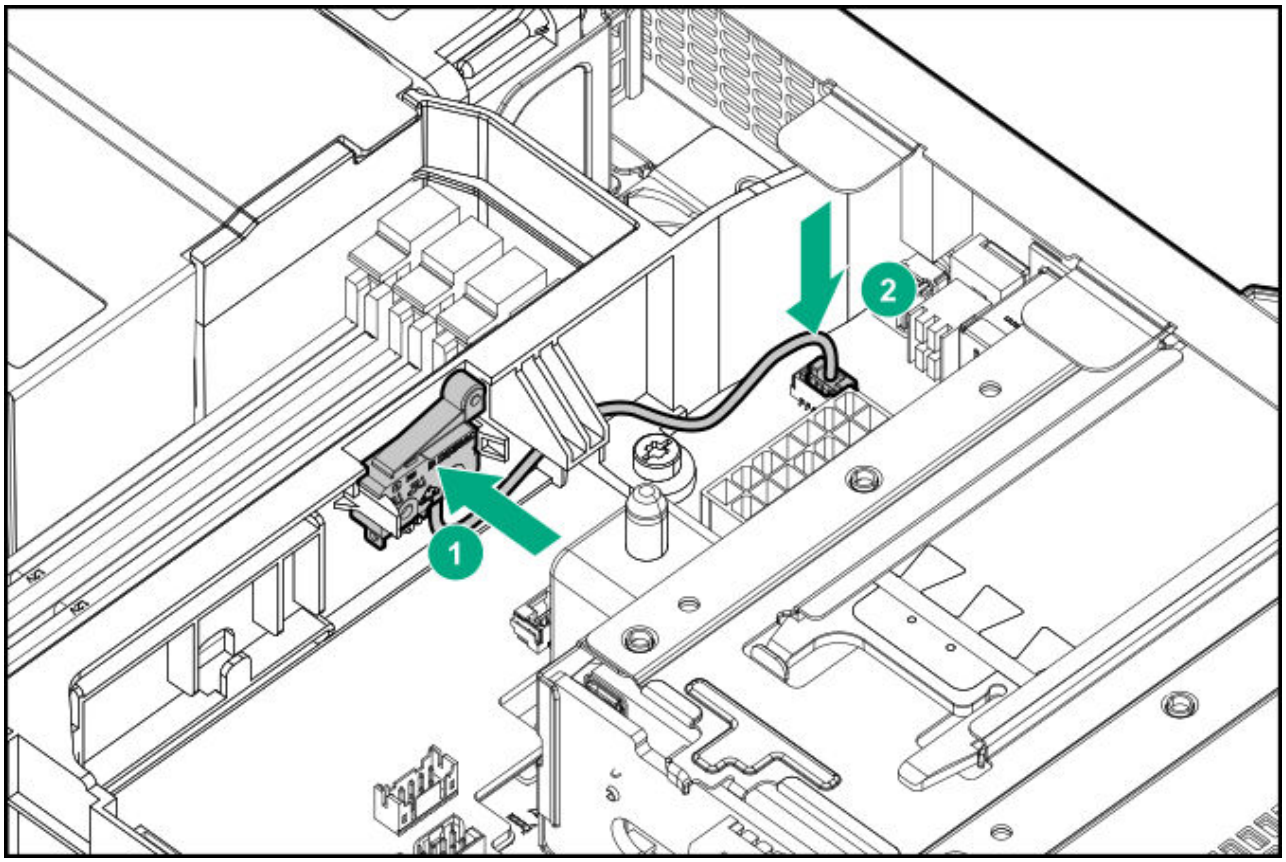

8. Install the access panel.
9. Install the server into the rack.
10. Connect all peripheral cables to the server.
11. Connect the power cords:
    a. Connect each power cord to the server.
    b. Connect each power cord to the power source.
12. Power up the server.
13. If removed, install the front bezel.

The installation is complete.

HPE Trusted Platform Module 2.0 Gen10 option

Overview

Use these instructions to install and enable an HPE TPM 2.0 Gen10 Kit in a supported server. This option is not supported on a Gen9 and earlier server.

This procedure includes three sections:

1. Installing the Trusted Platform Module board.
2. Enabling the Trusted Platform Module.
3. Retaining the recovery key/password.

HPE TPM 2.0 installation is supported with specific operating system support such as Microsoft Windows Server 2012 R2 and later. For more information about operating system support, see the product QuickSpecs on the Hewlett Packard Enterprise website (**https://www.hpe.com/info/qs**). For more information about Microsoft Windows BitLocker Drive Encryption feature, see the Microsoft website (**https://www.microsoft.com**).

CAUTION: If the TPM is removed from the original server and powered up on a different server, data stored in the TPM including keys will be erased.

IMPORTANT: In UEFI Boot Mode, the HPE TPM 2.0 Gen10 Kit can be configured to operate as TPM 2.0 (default) or TPM 1.2 on a supported server. In Legacy Boot Mode, the configuration can be changed between TPM 1.2 and TPM 2.0, but only TPM 1.2 operation is supported.

HPE Trusted Platform Module 2.0 guidelines

CAUTION: Always observe the guidelines in this document. Failure to follow these guidelines can cause hardware damage or halt data access.

Hewlett Packard Enterprise SPECIAL REMINDER: Before enabling TPM functionality on this system, you must ensure that your intended use of TPM complies with relevant local laws, regulations and policies, and approvals or licenses must be obtained if applicable.

For any compliance issues arising from your operation/usage of TPM which violates the above mentioned requirement, you shall bear all the liabilities wholly and solely. Hewlett Packard Enterprise will not be responsible for any related liabilities.

慧与特别提醒：在您启用系统中的TPM功能前，请务必确认您对TPM的使用遵守当地相关法律、法规及政策，并已事先获得所需的一切批准及许可（如适用），因您未获得相应的操作/使用许可而导致的违规问题，皆由您自行承担全部责任，与慧与无涉。

When installing or replacing a TPM, observe the following guidelines:

- Do not remove an installed TPM. Once installed, the TPM becomes a permanent part of the system board.
- When installing or replacing hardware, Hewlett Packard Enterprise service providers cannot enable the TPM or the encryption technology. For security reasons, only the customer can enable these features.
- When returning a system board for service replacement, do not remove the TPM from the system board. When requested, Hewlett Packard Enterprise Service provides a TPM with the spare system board.
- Any attempt to remove the cover of an installed TPM from the system board can damage the TPM cover, the TPM, and the system board.
- If the TPM is removed from the original server and powered up on a different server, all data stored in the TPM including keys will be erased.
- When using BitLocker, always retain the recovery key/password. The recovery key/password is required to complete Recovery Mode after BitLocker detects a possible compromise of system integrity.
- Hewlett Packard Enterprise is not liable for blocked data access caused by improper TPM use. For operating instructions, see the TPM documentation or the encryption technology feature documentation provided by the operating system.

Installing and enabling the HPE TPM 2.0 Gen10 option

Installing the Trusted Platform Module board

Preparing the server for installation

Procedure

1. Observe the following warnings:

   WARNING: The front panel Power On/Standby button does not shut off system power. Portions of the power supply and some internal circuitry remain active until AC power is removed.
   To reduce the risk of personal injury, electric shock, or damage to the equipment, remove power from the server:

   - For rack and tower servers, remove the power cord.
   - For server blades and compute modules, remove the server blade or compute module from the rack.

   WARNING: To reduce the risk of personal injury from hot surfaces, allow the drives and the internal system components to cool before touching them.

2. Update the system ROM.

   Locate and download the latest ROM version from the **Hewlett Packard Enterprise Support Center website**. Follow the instructions on the website to update the system ROM.

3. If installed, remove the front bezel.
4. Power down the server.
5. Remove all power:
   a. Disconnect each power cord from the power source.
   b. Disconnect each power cord from the server.
6. Disconnect all peripheral cables from the server.
7. Remove the server from the rack.
8. Remove the access panel.
9. Proceed to Installing the TPM board and cover.

Installing the TPM board and cover

Procedure

1. Observe the following alerts:

> **CAUTION:** If the TPM is removed from the original server and powered up on a different server, data stored in the TPM including keys will be erased.

> **CAUTION:** The TPM is keyed to install only in the orientation shown. Any attempt to install the TPM in a different orientation might result in damage to the TPM or system board.

2. Align the TPM board with the key on the connector, and then install the TPM board. To seat the board, press the TPM board firmly into the connector. To locate the TPM connector on the system board, see the server label on the access panel.

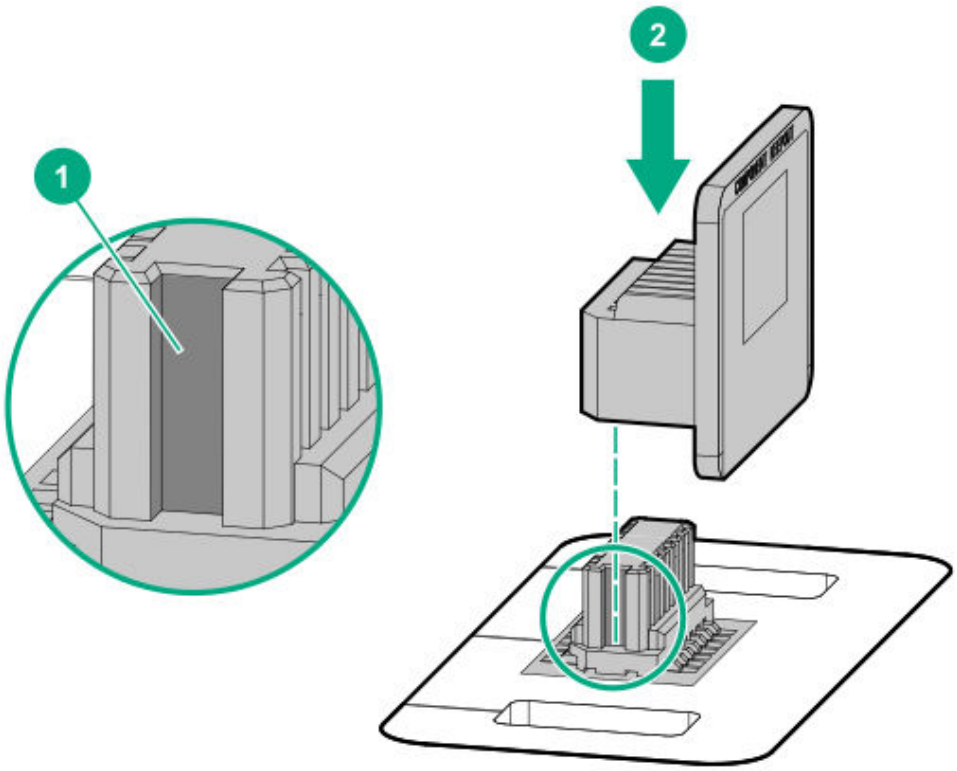

3. Install the TPM cover:

   a. Line up the tabs on the cover with the openings on either side of the TPM connector.

b. To snap the cover into place, firmly press straight down on the middle of the cover.

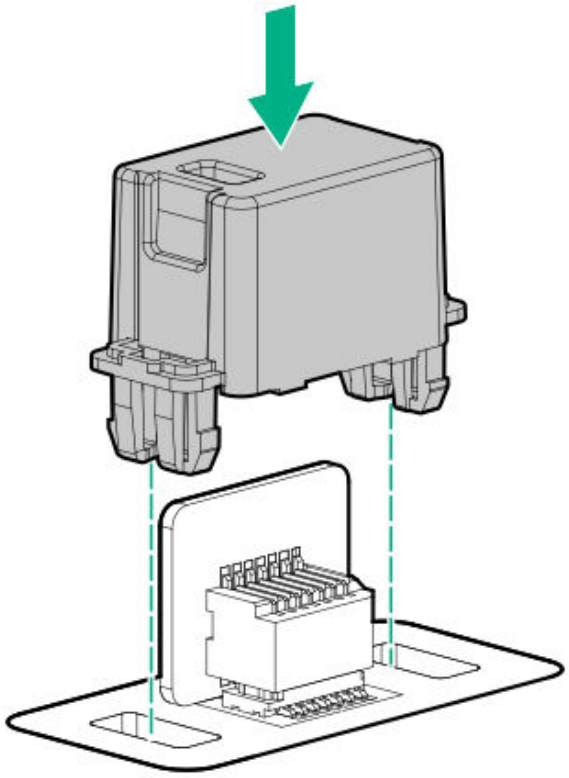

4. Proceed to Preparing the server for operation.

Preparing the server for operation

Procedure

1. Install any options or cables previously removed to access the TPM connector.
2. Install the access panel.
3. Install the server into the rack.
4. Connect all peripheral cables to the server.
5. Connect the power cords:
   a. Connect each power cord to the server.
   b. Connect each power cord to the power source.

6. Power up the server.
7. If removed, install the front bezel.

Enabling the Trusted Platform Module

When enabling the Trusted Platform module, observe the following guidelines:

- By default, the Trusted Platform Module is enabled as TPM 2.0 when the server is powered on after installing it.
- In UEFI Boot Mode, the Trusted Platform Module can be configured to operate as TPM 2.0 (default) or TPM 1.2.
- In Legacy Boot Mode, the Trusted Platform Module configuration can be changed between TPM 1.2 and TPM 2.0 (default), but only TPM 1.2 operation is supported.

Enabling the Trusted Platform Module as TPM 2.0

Procedure

1. During the server startup sequence, press the **F9** key to access **System Utilities**.
2. From the System Utilities screen, select **System Configuration > BIOS/Platform Configuration (RBSU) > Server Security > Trusted Platform Module options**.
3. Verify the following:
   - "Current TPM Type" is set to **TPM 2.0**.
   - "Current TPM State" is set to **Present and Enabled**.
   - "TPM Visibility" is set to **Visible**.
4. If changes were made in the previous step, press the **F10** key to save your selection.
5. If **F10** was pressed in the previous step, do one of the following:
   - If in graphical mode, click **Yes**.
   - If in text mode, press the **Y** key.

6. Press the **ESC** key to exit System Utilities.
7. If changes were made and saved, the server prompts for reboot request. Press the **Enter** key to confirm reboot.

   If the following actions were performed, the server reboots a second time without user input. During this reboot, the TPM setting becomes effective.

   - Changing from TPM 1.2 and TPM 2.0
   - Changing TPM bus from FIFO to CRB
   - Enabling or disabling TPM
   - Clearing the TPM
8. Enable TPM functionality in the OS, such as Microsoft Windows BitLocker or measured boot.

   For more information, see the **Microsoft website**.

Enabling the Trusted Platform Module as TPM 1.2

Procedure

1. During the server startup sequence, press the **F9** key to access **System Utilities**.
2. From the System Utilities screen select **System Configuration > BIOS/Platform Configuration (RBSU) > Server Security > Trusted Platform Module options**.
3. Change the "TPM Mode Switch Operation" to **TPM 1.2**.
4. Verify that "TPM Visibility" is set to **Visible**.
5. Press the **F10** key to save your selection.
6. When prompted to save the change in System Utilities, do one of the following:
   - If in graphical mode, click **Yes**.
   - If in text mode, press the **Y** key.
7. Press the **ESC** key to exit System Utilities.

   The server reboots a second time without user input. During this reboot, the TPM setting becomes effective.

8. Enable TPM functionality in the OS, such as Microsoft Windows BitLocker or measured boot.

   For more information, see the **Microsoft website**.

Retaining the BitLocker recovery key/password

The recovery key/password is generated during BitLocker setup, and can be saved and printed after BitLocker is enabled. When using BitLocker, always retain the recovery key/password. The recovery key/password is required to enter Recovery Mode after BitLocker detects a possible compromise of system integrity.

To help ensure maximum security, observe the following guidelines when retaining the recovery key/password:

- Always store the recovery key/password in multiple locations.
- Always store copies of the recovery key/password away from the server.
- Do not save the recovery key/password on the encrypted hard drive.

Cabling

Cabling guidelines

The cable colors in the cabling diagrams used in this chapter are for illustration purposes only.

Observe the following guidelines when working with server cables.

Before connecting cables

- Note the port labels on the PCA components. Not all these components are used by all servers:
  - System board ports
  - Drive and power supply backplane ports
  - Expansion board ports (controllers, adapters, expanders, risers, and similar boards)

- Note the label near each cable connector. This label indicates the destination port for the cable connector.
- Some data cables are prebent. Do not unbend or manipulate the cables.
- To prevent mechanical damage or depositing oil that is present on your hands, and other contamination, do not touch the ends of the connectors.

When connecting cables

- Before connecting a cable to a port, lay the cable in place to verify the length of the cable.
- Use the internal cable management features to properly route and secure the cables.
- When routing cables, be sure that the cables are not in a position where they can be pinched or crimped.
- Avoid tight bend radii to prevent damaging the internal wires of a power cord or a server cable. Never bend power cords and server cables tight enough to cause a crease in the sheathing.
- Make sure that the excess length of cables is properly secured to avoid excess bends, interference issues, and airflow restriction.
- To prevent component damage and potential signal interference, make sure that all cables are in their appropriate routing position before installing a new component and before closing up the server after hardware installation/maintenance.

When disconnecting cables

- Grip the body of the cable connector. Do not pull on the cable itself because this action can damage the internal wires of the cable or the pins on the port.
- If a cable does not disconnect easily, check for any release latch that must be pressed to disconnect the cable.

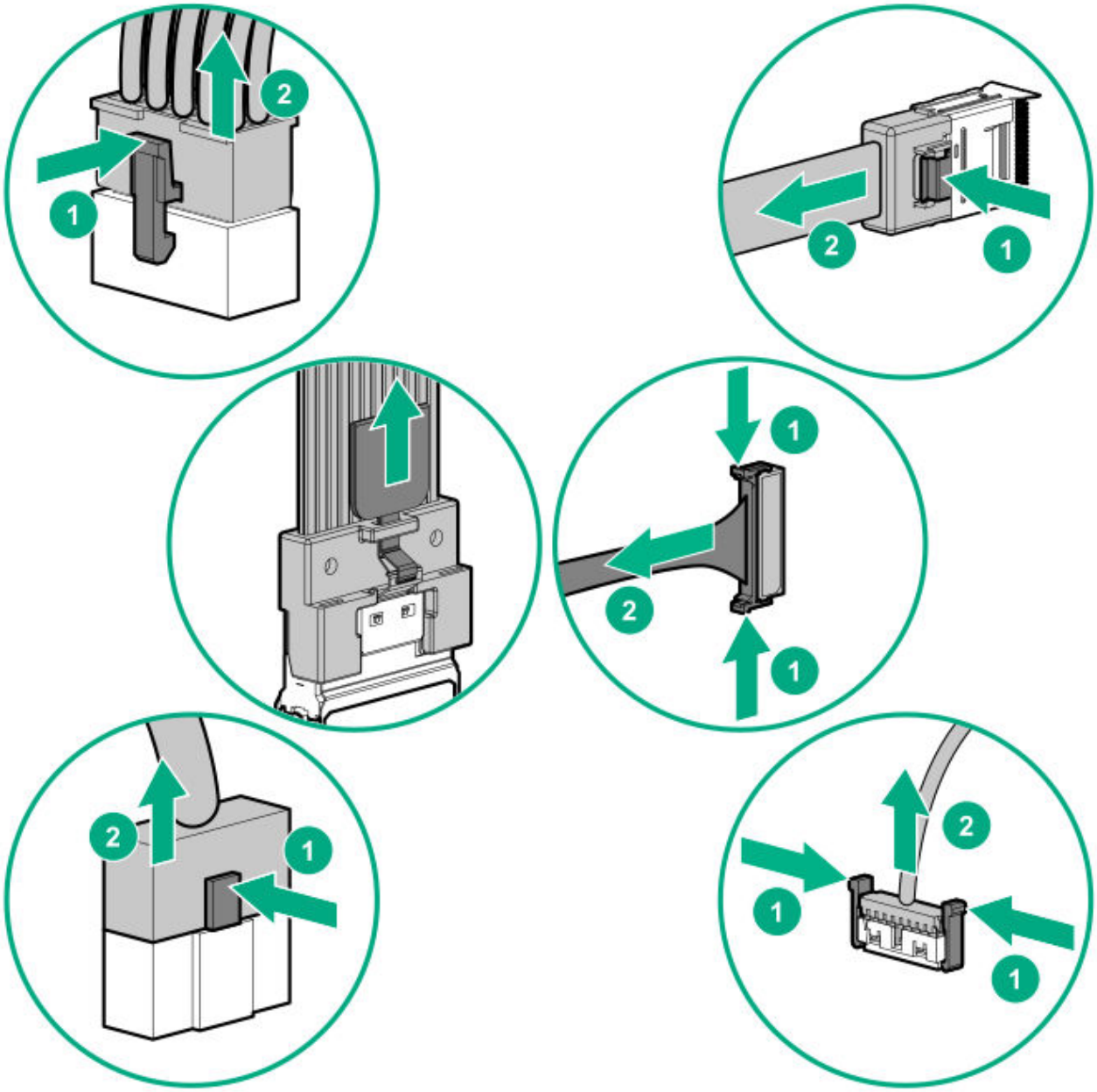

- Remove cables that are no longer being used. Retaining them inside the server can restrict airflow. If you intend to use the removed cables later, label and store them for future use.

Storage cabling

Non-hot-plug drive cabling

Two-bay LFF non-hot-plug drive for embedded controller cabling

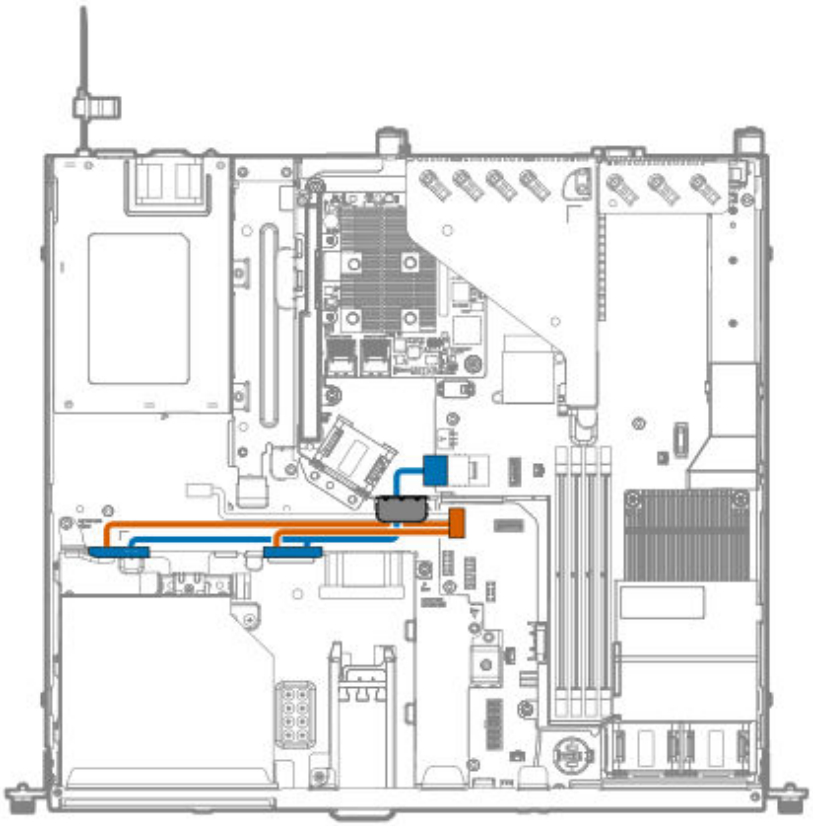

Cable color	Description
Orange	Non-hot-plug drive power cable
Blue	SATA cable

Two-bay LFF non-hot-plug drive for Smart Array modular controller (AROC) cabling

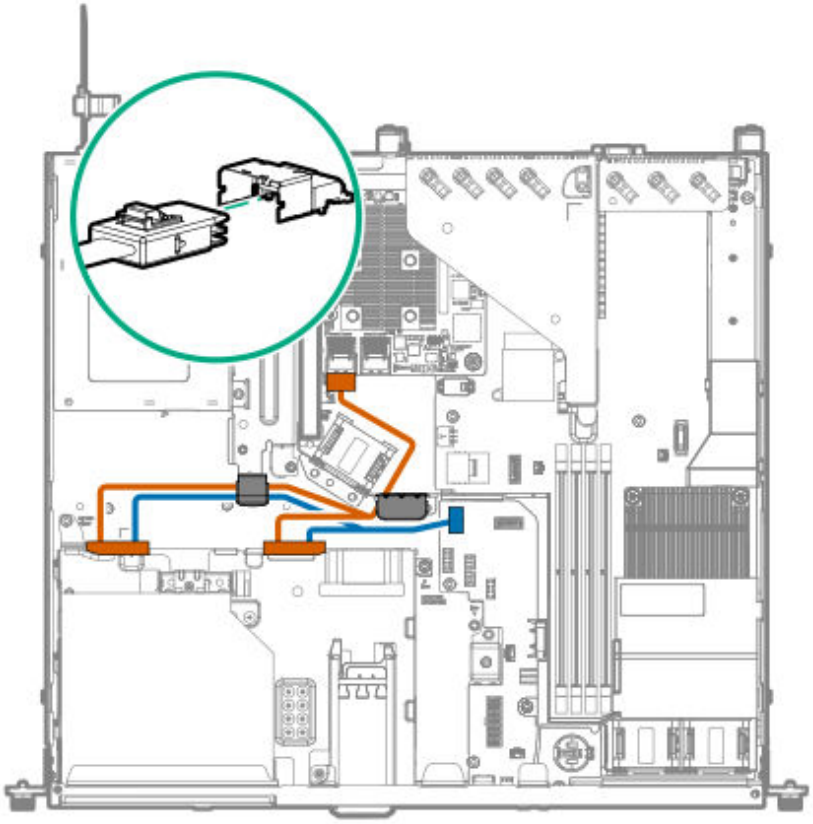

Cable color	Description
Orange	SATA cable from drive backplane to modular controller (A ROC) port 1
Blue	Drive backplane power cable

Two-bay LFF non-hot-plug drive for type-p controller cabling

Slot 1

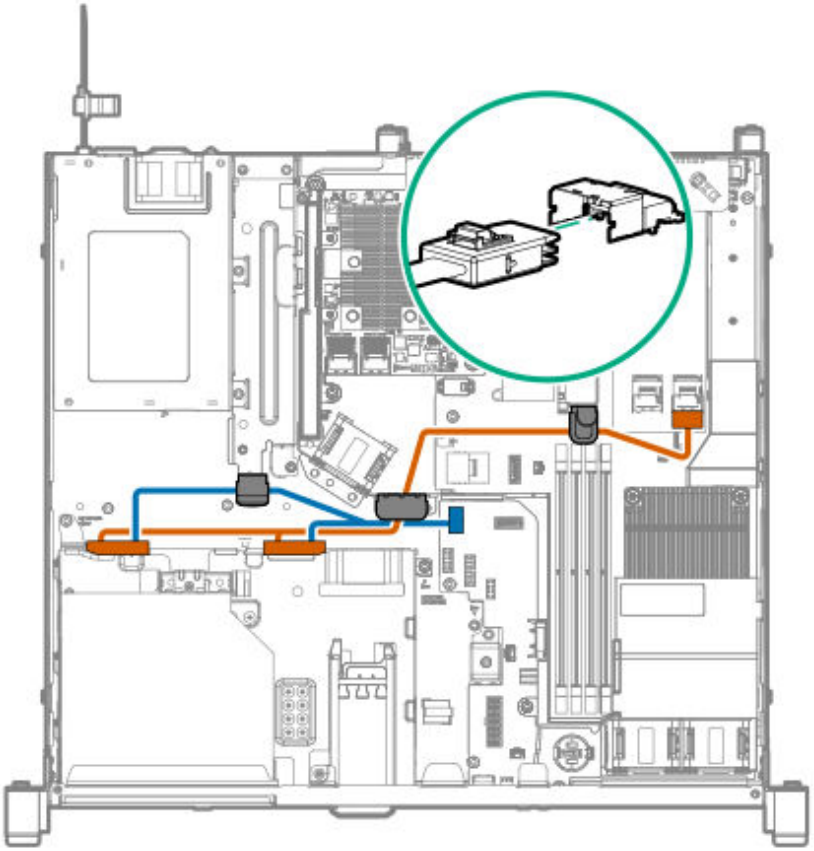

Cable color	Description
Orange	SATA cable from drive backplane to controller port 1
Blue	Drive backplane power cable

Slot 2

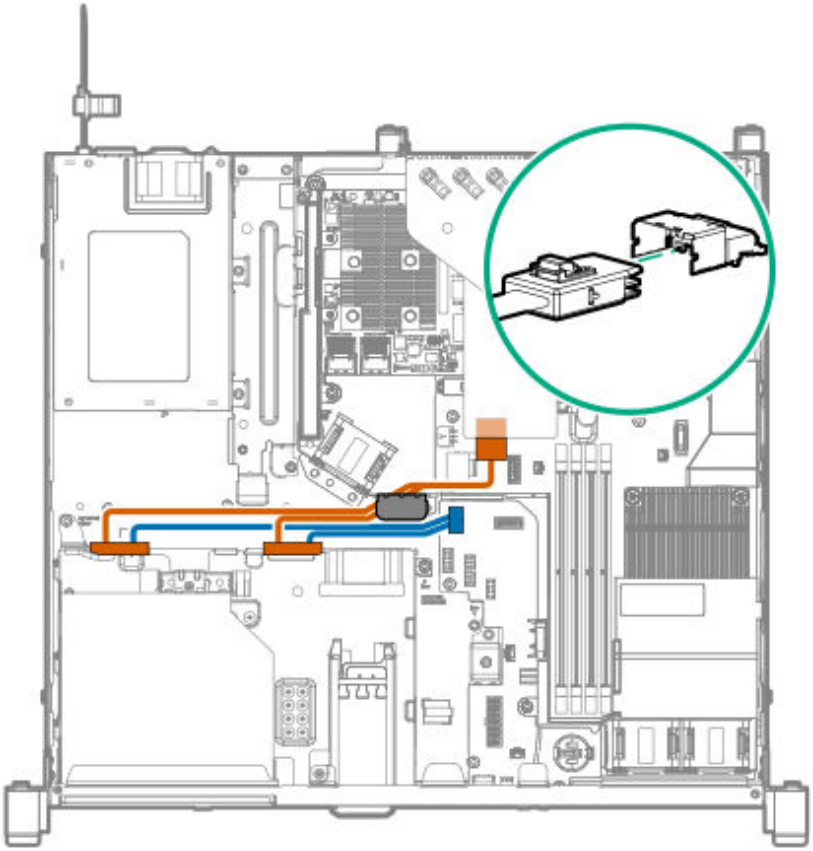

Cable color	Description
Orange	SATA cable from drive backplane to controller port 2
Blue	Drive backplane power cable

Hot-plug drive cabling

Two-bay LFF hot-plug drive cabling

Two-bay LFF hot-plug drive for embedded controller cabling

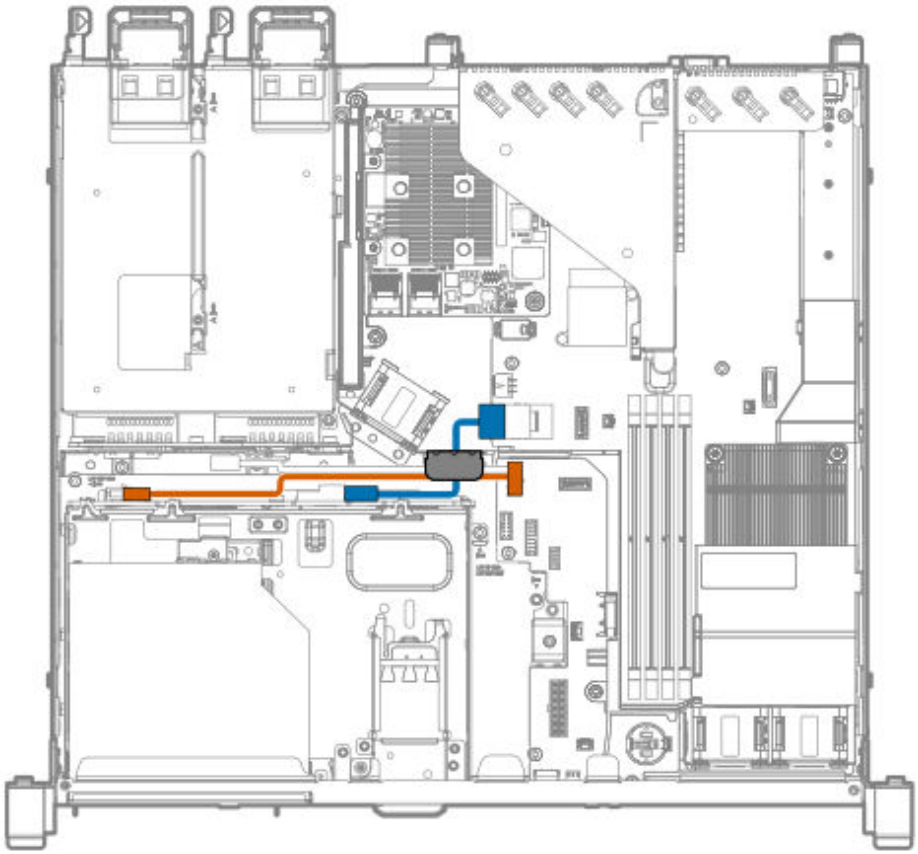

Cable color	Description
Orange	Two-bay LFF drive backplane power cable
Blue	Mini-SAS cable

Two-bay LFF hot-plug drive for Smart Array modular controller (AROC) cabling

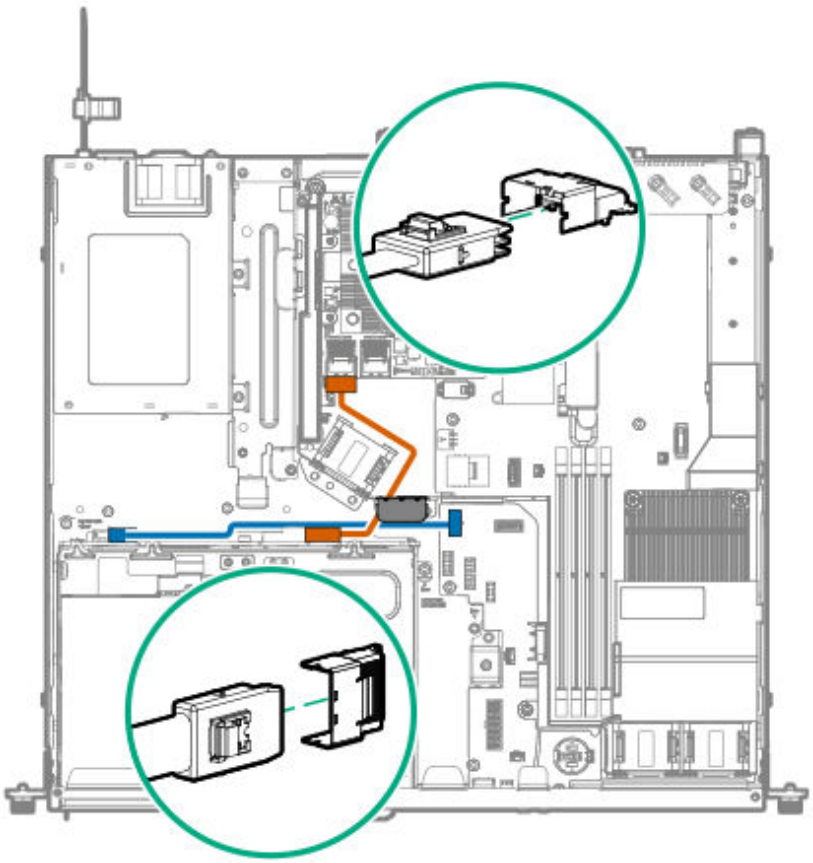

Cable color	Description
Orange	Mini-SAS cable from drive backplane to AROC port 1
Blue	Drive backplane power cable

Two-bay LFF hot-plug drive for type-p controller cabling

Slot 1

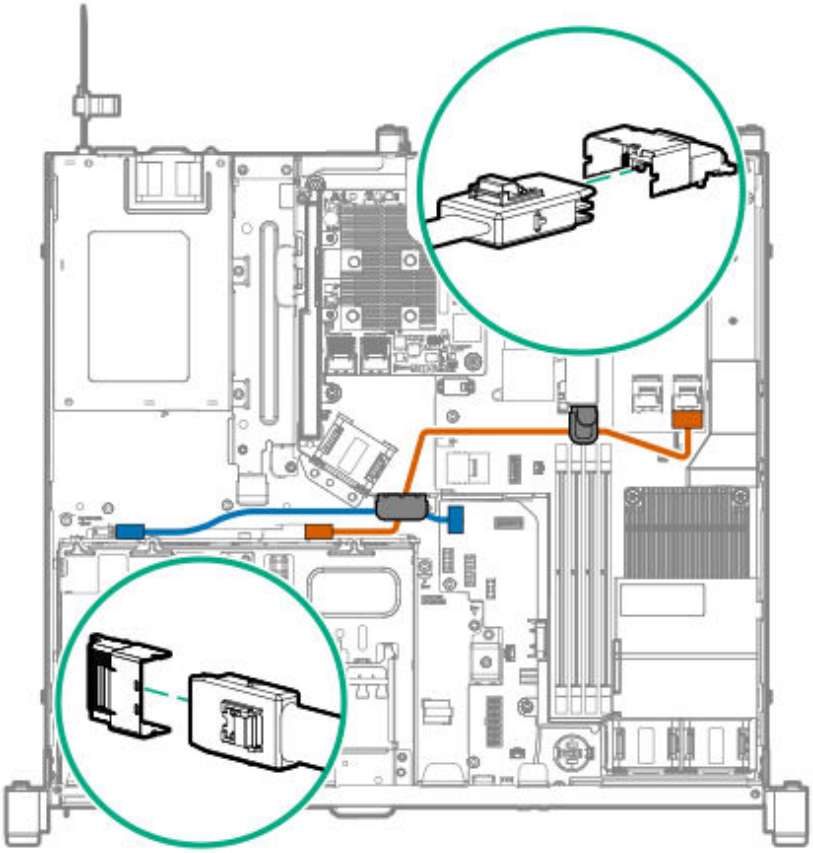

Cable color	Description
Orange	Mini-SAS cable from drive backplane to controller port 1
Blue	Drive backplane power cable

Slot 2

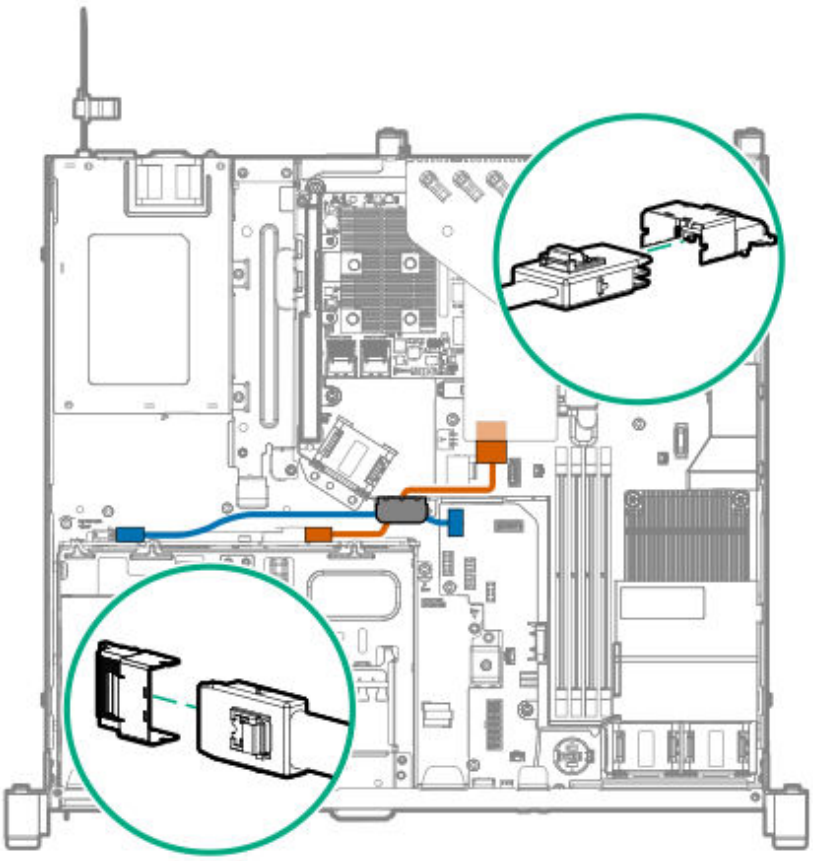

Cable color	Description
Orange	Mini-SAS cable from drive backplane to controller port 2
Blue	Drive backplane power cable

Four bay SFF hot-plug drive cabling

Four-bay SFF hot-plug drive for embedded controller cabling

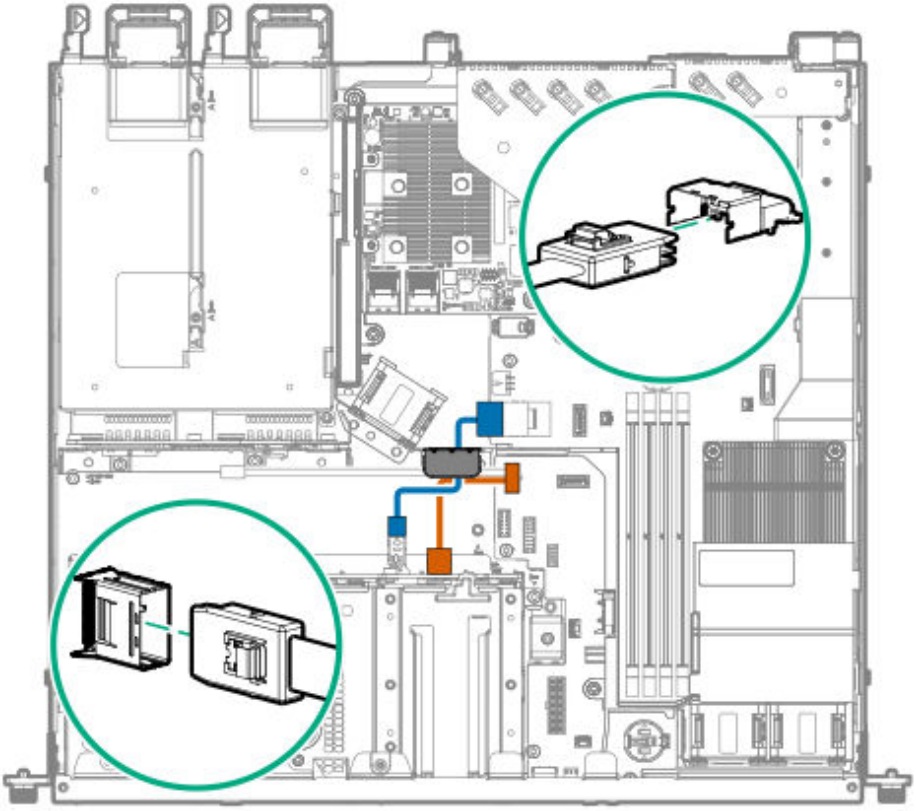

Cable color	Description
Orange	Four-bay SFF drive backplane power cable
Blue	Mini-SAS cable

4+2 bay SFF hot-plug drive cabling

4+2 bay SFF hot-plug drive for embedded controller cabling

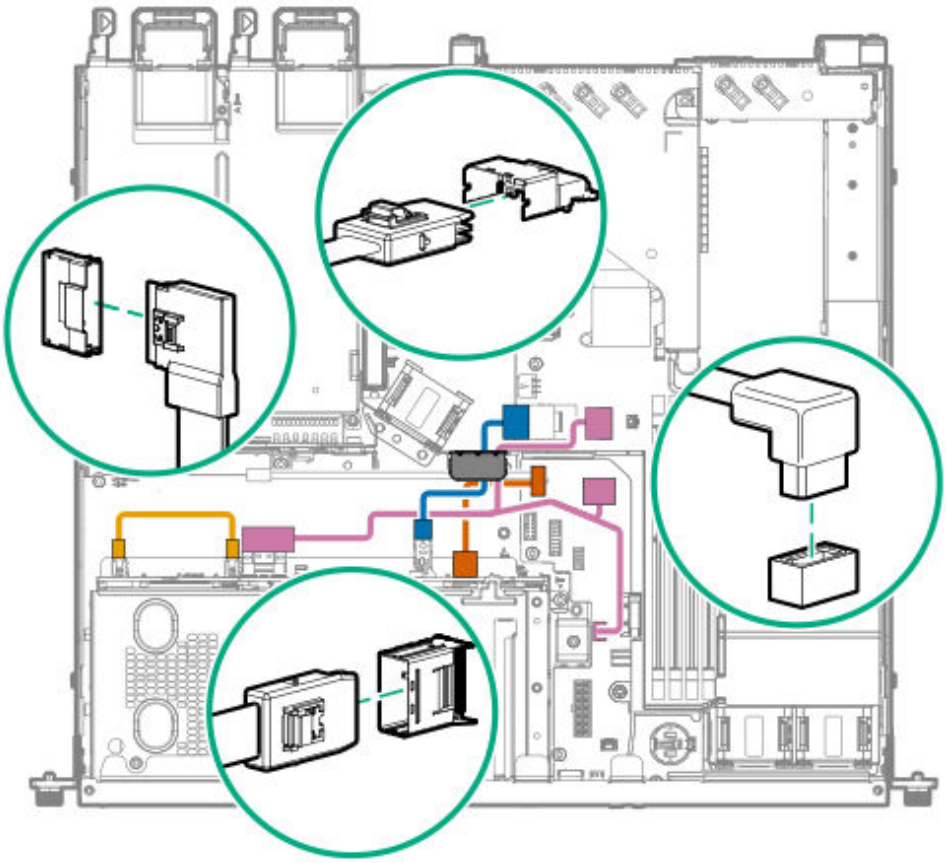

Cable color	Description
Orange	Four-bay SFF drive backplane power cable
Blue	Mini-SAS cable
Gold	Two-bay SFF to four-bay SFF drive backplane power cable
Pink	SATA cable and drive sideband cable

4+2 bay SFF hot-plug drive for Smart Array modular controller (AROC) cabling

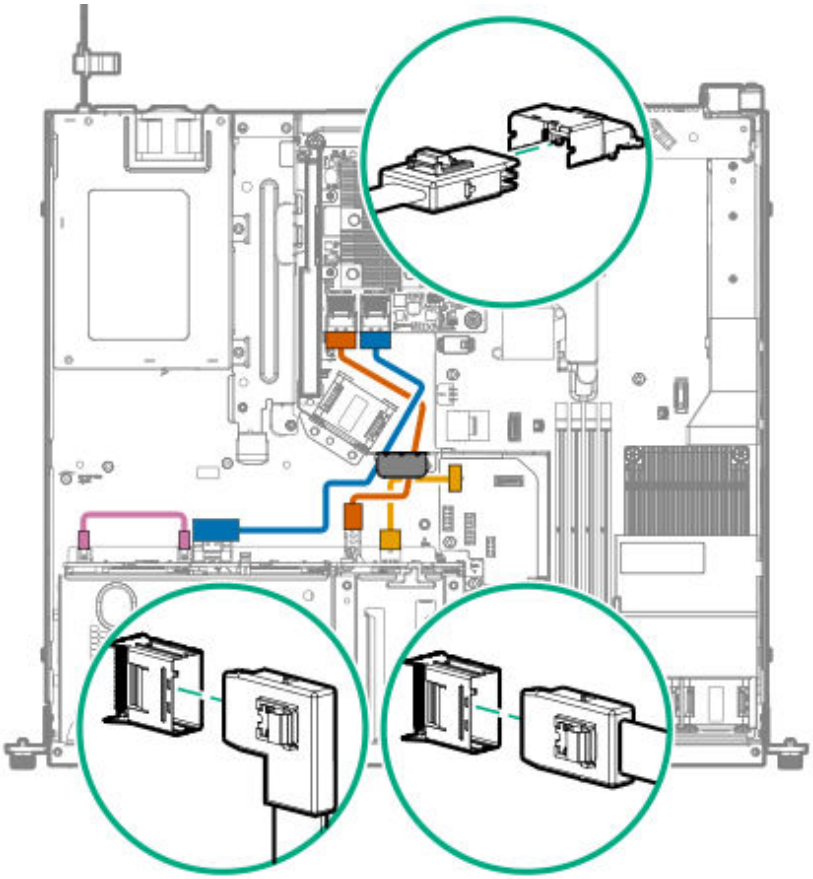

Cable color	Description
Orange	Mini-SAS cable from four-bay SFF drive backplane Mini-SAS cable to AROC port 1
Blue	Mini-SAS cable from two-bay SFF drive backplane to AROC port 2
Gold	Four-bay SFF drive backplane power cable
Pink	Two-bay to four-bay SFF drive backplane power cable

4+2 bay SFF hot-plug drive for type-p controller cabling

Slot 1

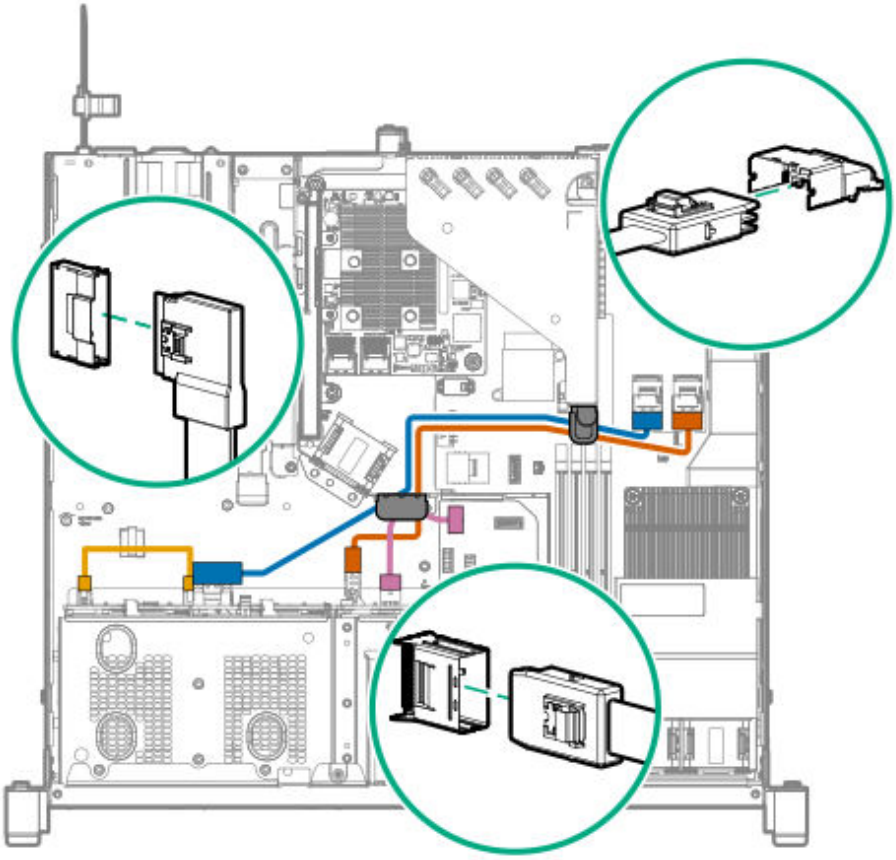

Cable color	Description
Orange	Mini-SAS cable from four-bay SFF drive backplane to cont roller port 1
Blue	Mini-SAS cable from two-bay SFF drive backplane to cont roller port 2
Gold	Two-bay to four-bay SFF drive backplane power cable
Pink	Four-bay SFF drive backplane power cable

Slot 2

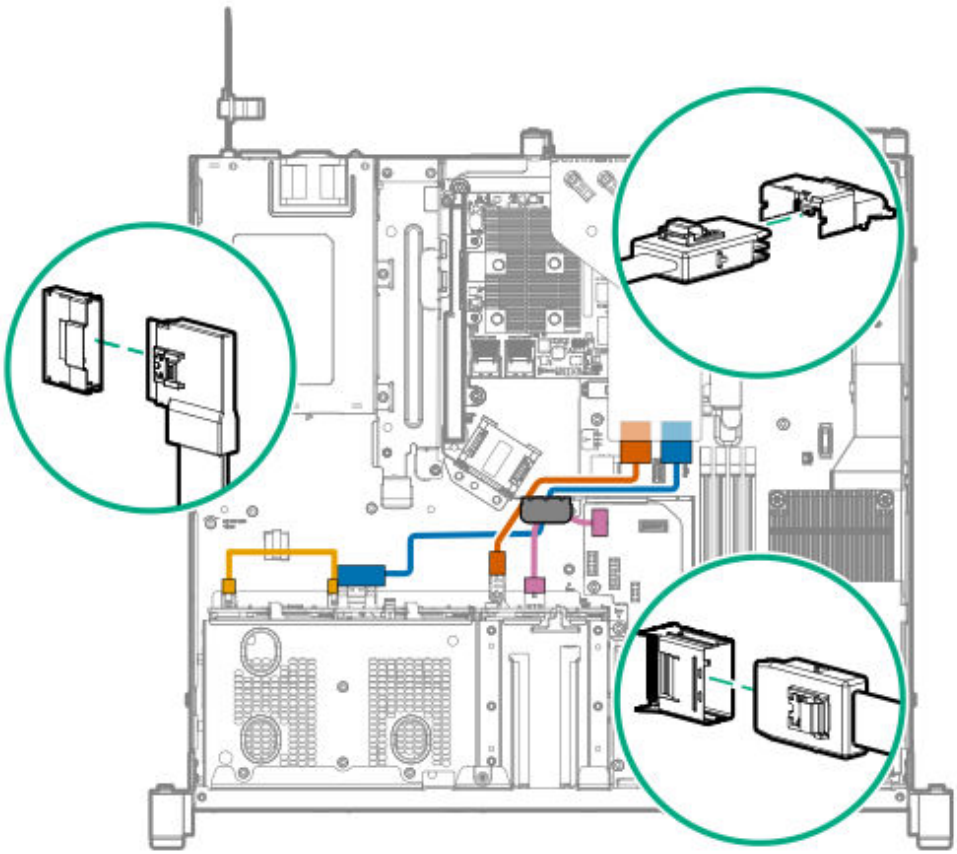

Cable color	Description
Orange	Mini-SAS cable from four-bay SFF drive backplane to cont roller port 1
Blue	Mini-SAS cable from two-bay SFF drive backplane to cont roller port 2
Gold	Two-bay to four-bay SFF drive backplane power cable
Pink	Four-bay SFF drive backplane power cable

M.2 SATA SSD cabling

M.2 SATA SSD in slot 1

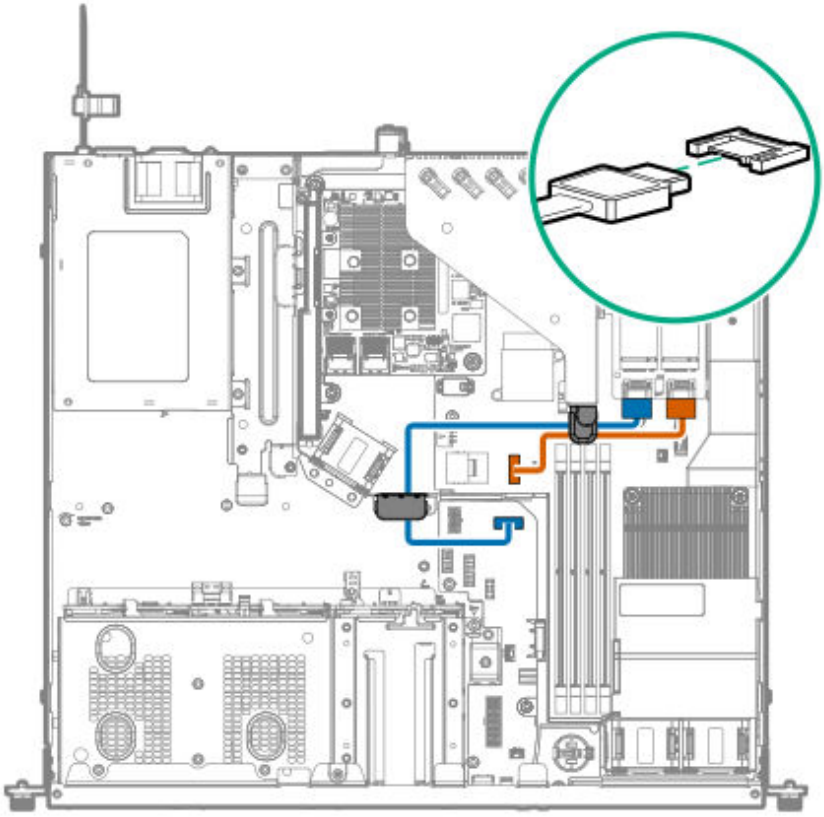

Cable color	Description
Orange	SATA cable to x1 SATA port 1
Blue	SATA cable to x1 SATA port 2

M.2 SATA SSD in slot 2

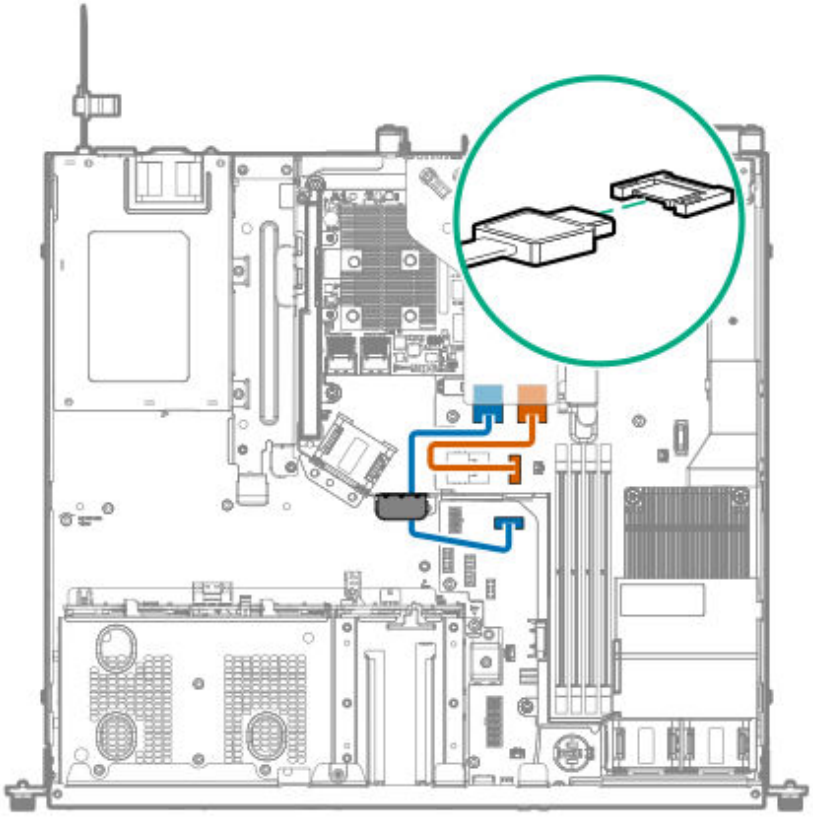

Cable color	Description
Orange	SATA cable to x1 SATA port 1
Blue	SATA cable to x1 SATA port 2

Energy pack cabling

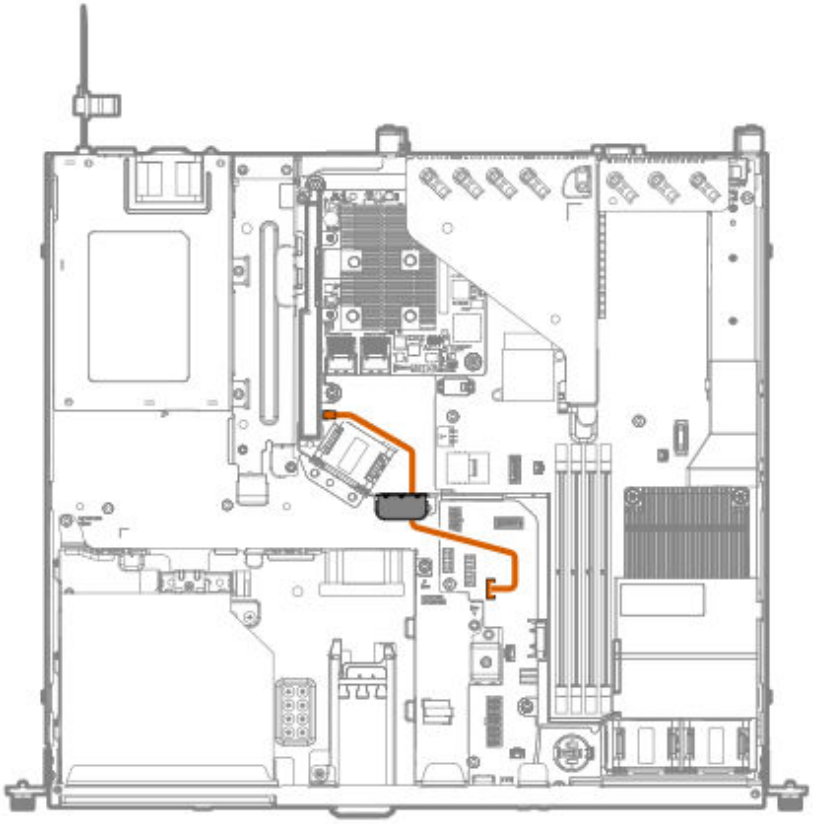

Controller backup power cabling

Slot 1

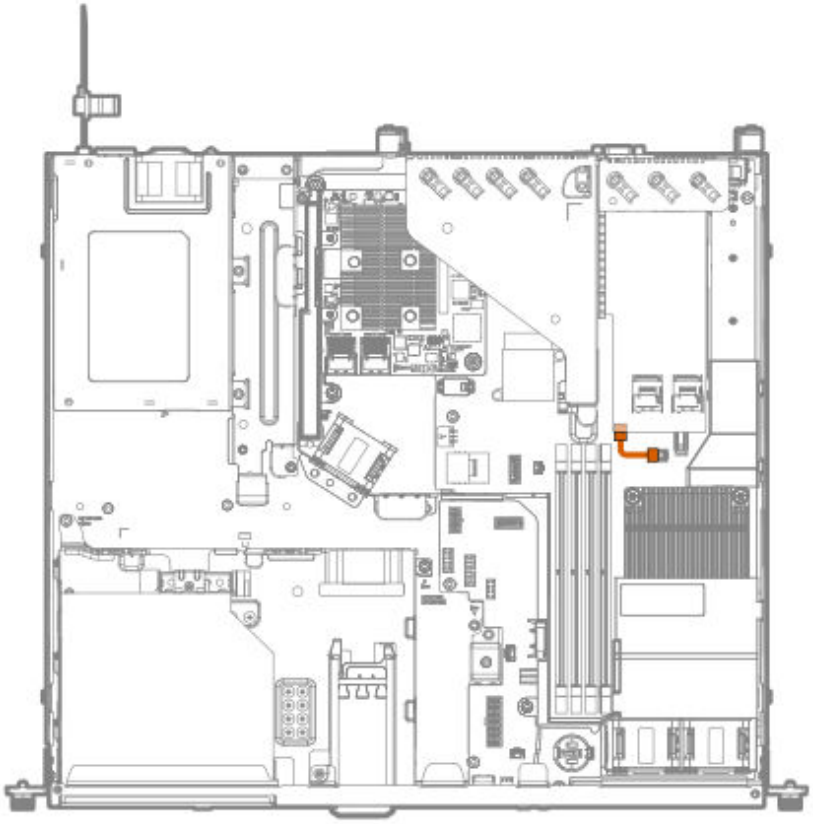

Slot 2

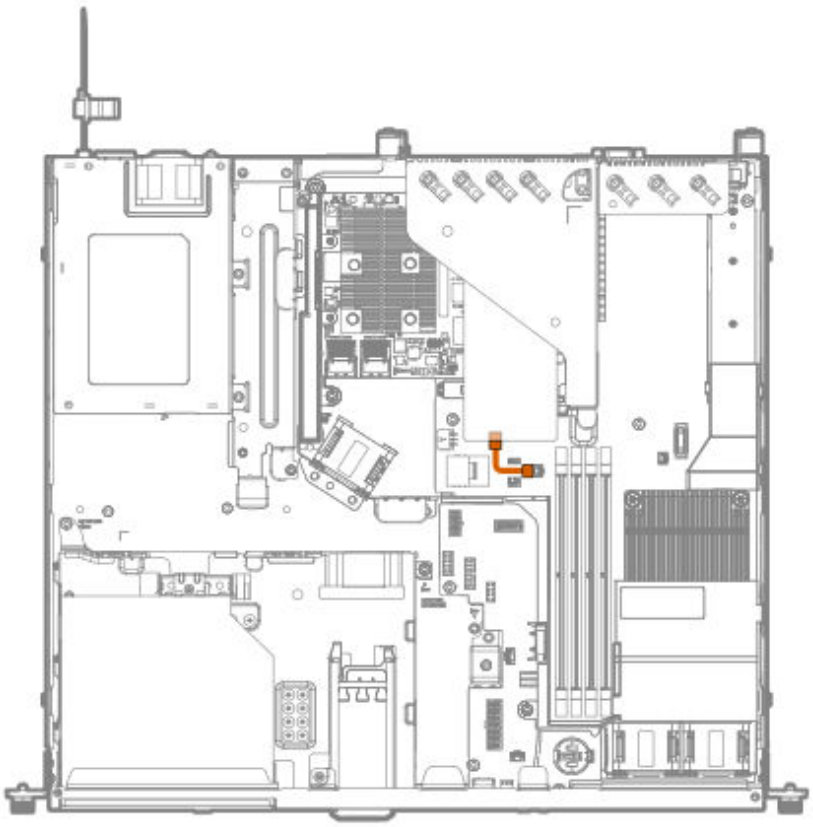

Optical drive cabling

LFF configuration

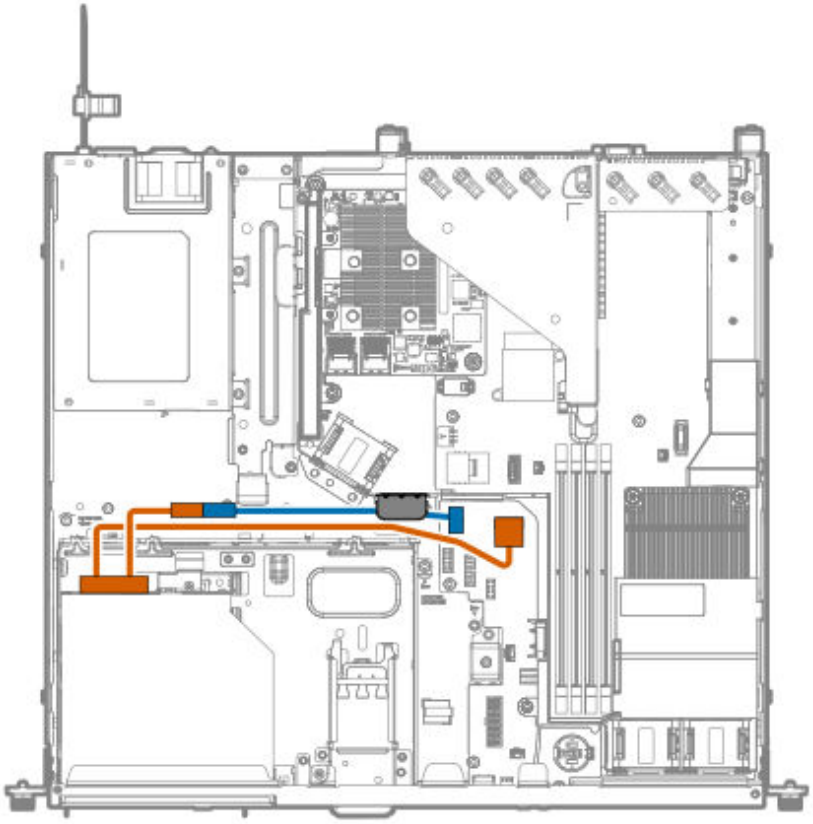

Cable color	Description
Orange	SATA-power Y-cable to x1 SATA port 2
Blue	Power extension cable

SFF configuration

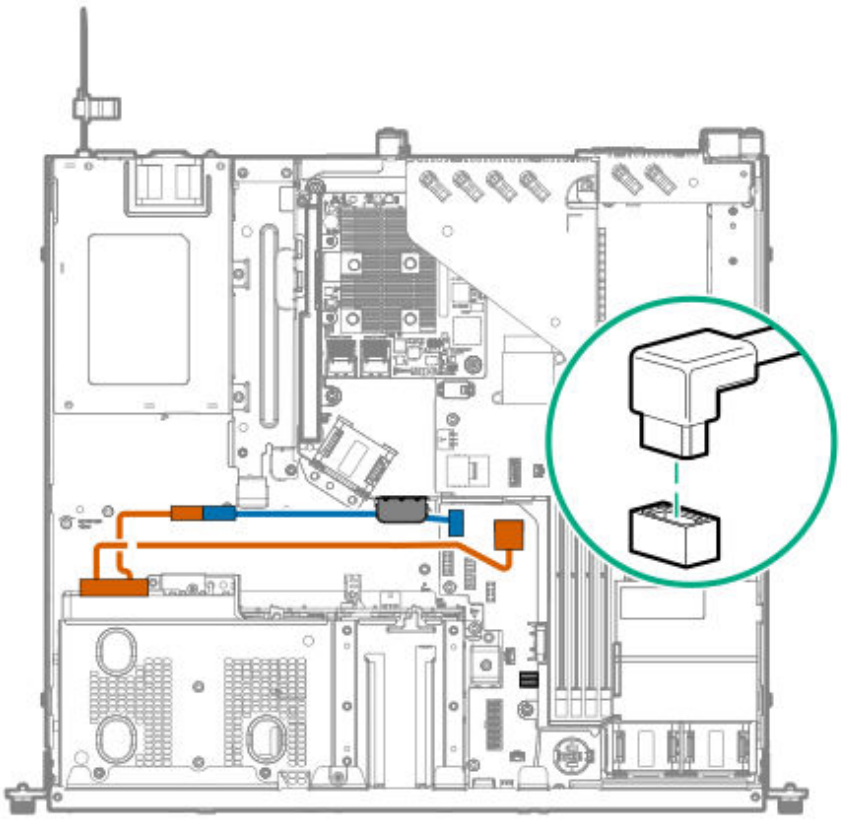

Cable color	Description
Orange	SATA-power-Y cable to x1 SATA port 2
Blue	Power extension cable

Fan cabling

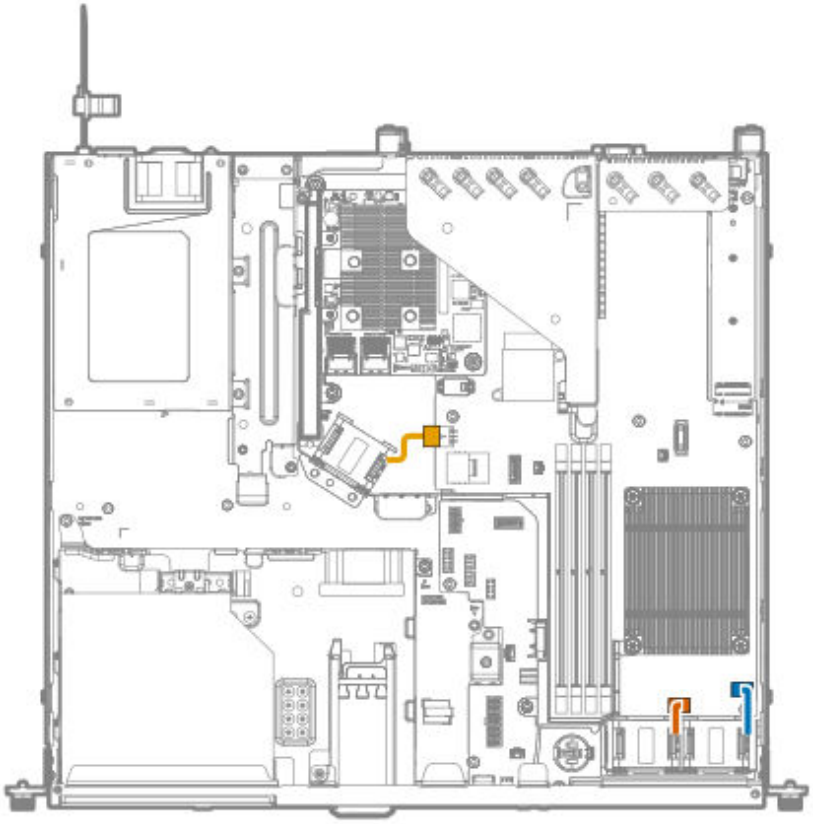

Cable color	Description
Orange	Fan 1 cable
Blue	Fan 2 cable
Gold	Fan 3 cable

Chassis intrusion detection switch cabling

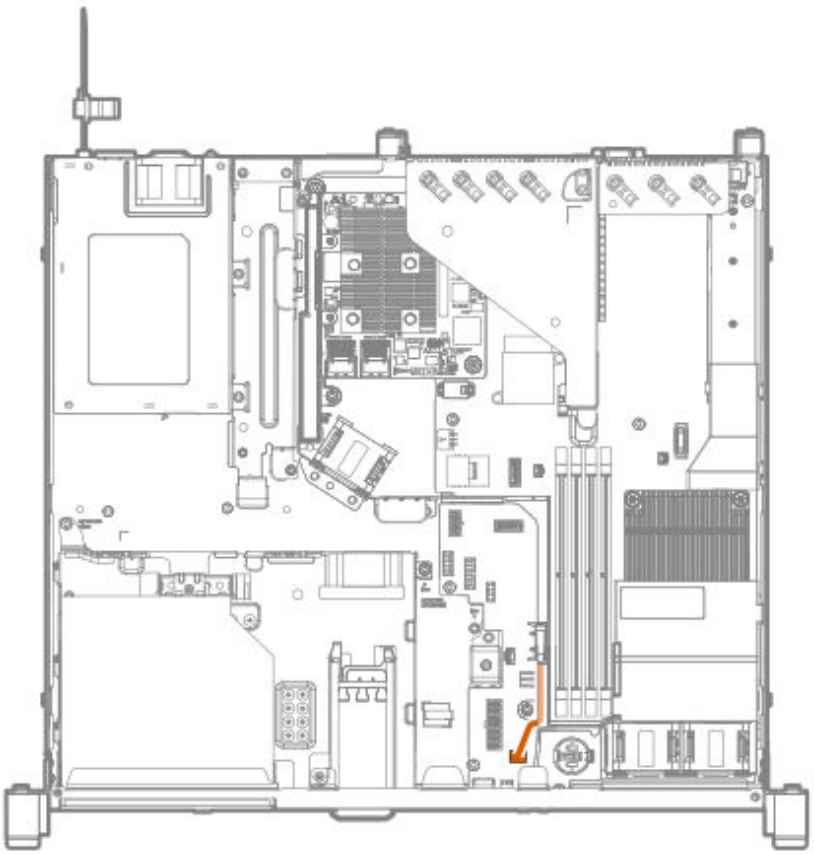

Serial port cabling

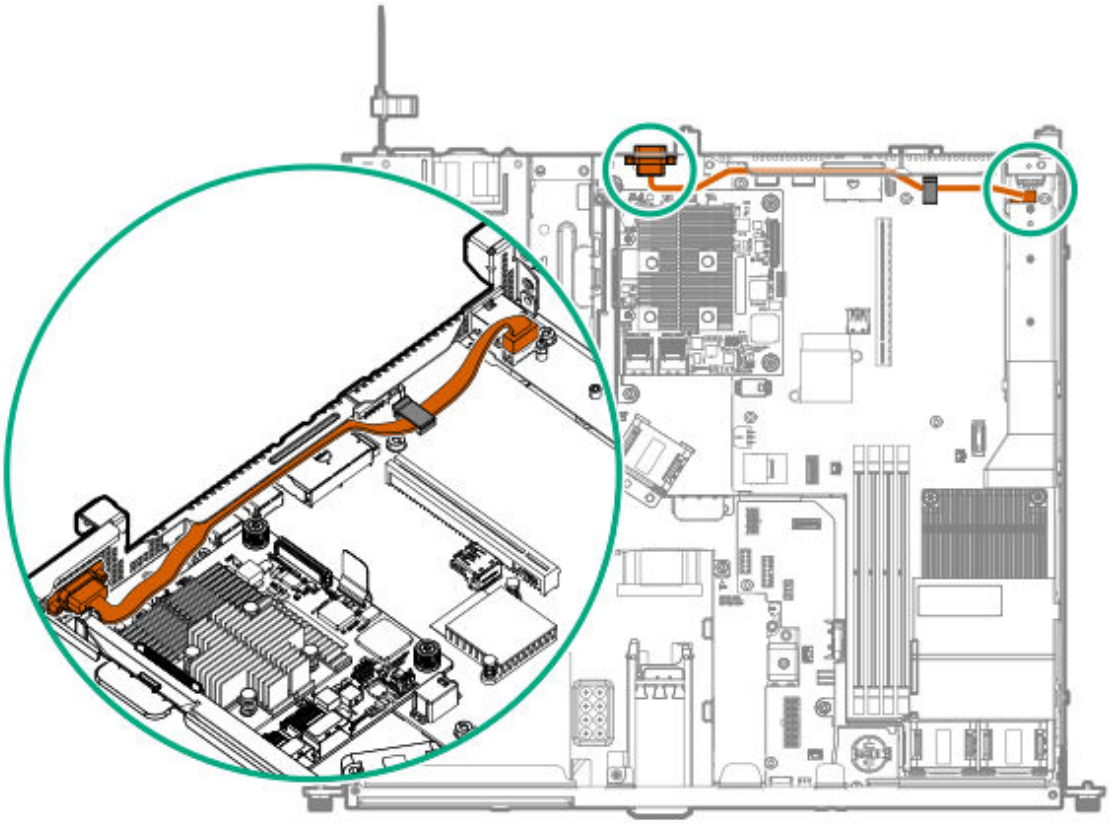

Power supply cabling

Non-hot-plug power supply cabling

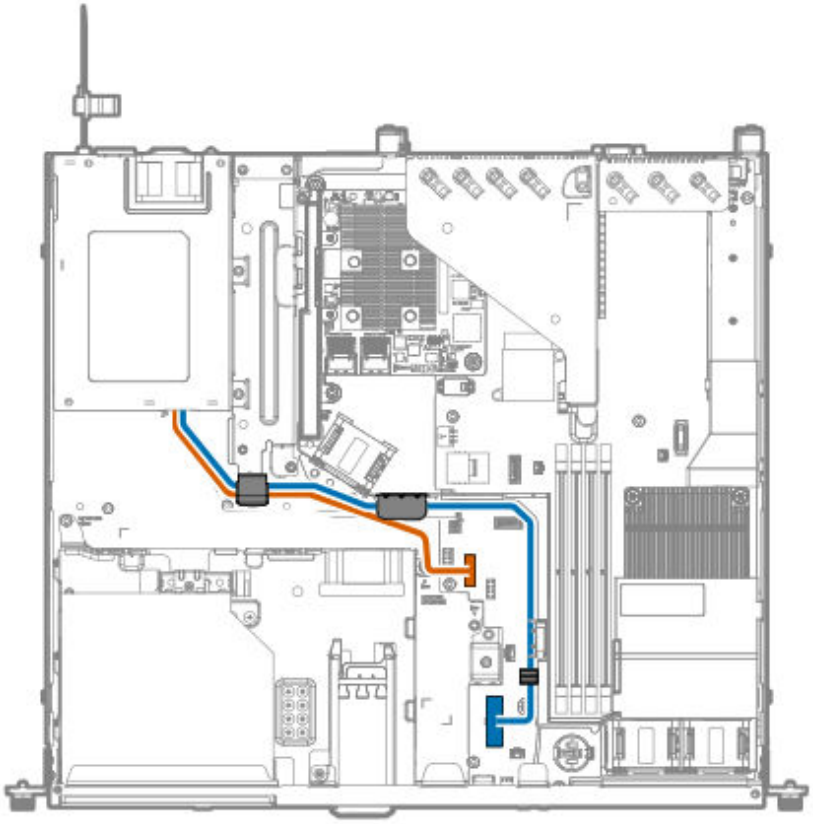

Cable color	Description
Orange	16-pin power supply sideband cable
Blue	14-pin power supply cable

Flexible Slot power supply cabling

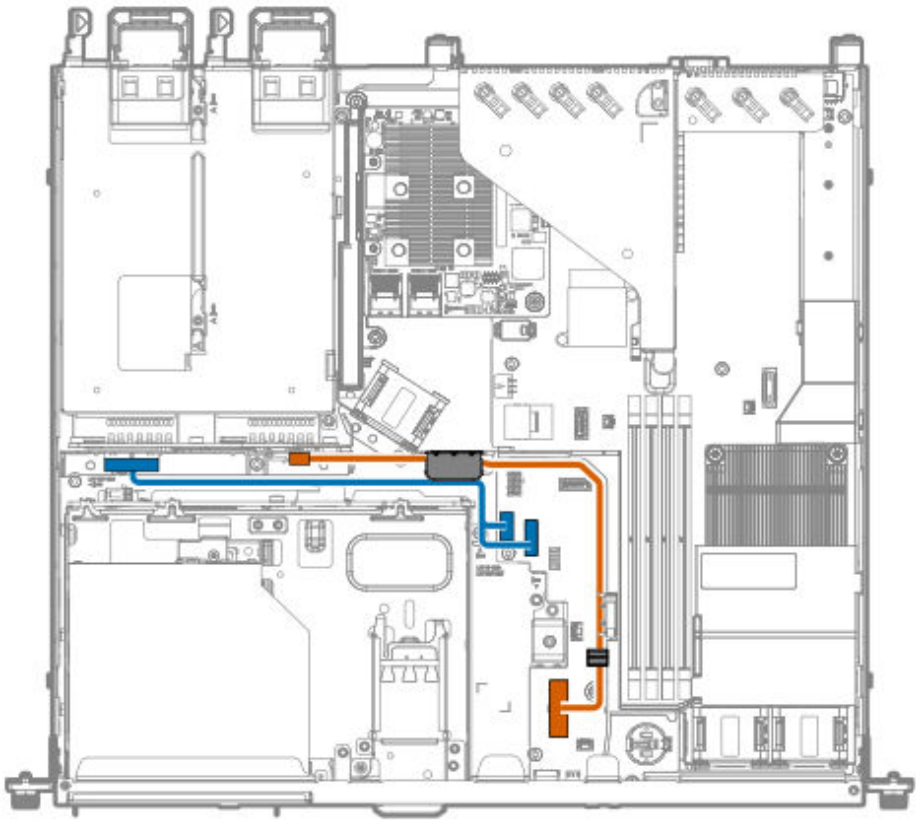

Cable color	Description
Orange	14-pin power supply cable
Blue	Redundant power supply sideband cable

Software and configuration utilities

Server mode

The software and configuration utilities presented in this section operate in online mode, offline mode, or in both modes.

Software or configuration utility	Server mode
Active Health System	Online and Offline
HPE iLO 5	Online and Offline
HPE Smart Storage Administrator	Online and Offline
iLO RESTful API	Online and Offline
Intelligent Provisioning	Online and Offline
Scripting Toolkit for Windows and Linux	Online
Service Pack for ProLiant	Online and Offline
Introduction to Smart Update Manager	Online and Offline
UEFI System Utilities	Offline

Product QuickSpecs

For more information about product features, specifications, options, configurations, and compatibility, see the product QuickSpecs on the Hewlett Packard Enterprise website (**https://www.hpe.com/info/qs**).

Active Health System Viewer

Active Health System Viewer (AHSV) is an online tool used to read, diagnose, and resolve server issues quickly using AHS uploaded data. AHSV provides Hewlett Packard Enterprise recommended repair actions based on experience and best practices. AHSV provides the ability to:

- Read server configuration information
- View Driver/Firmware inventory
- Review Event Logs
- Respond to Fault Detection Analytics alerts

- Open new and update existing support cases

Active Health System

Active Health System is the 24/7 control center for your server. With fast diagnostic data collection and the richest, most relevant data, it is the fastest way to get your system back online and keep it running optimally.

The Active Health System monitors and records changes in the server hardware and system configuration.

The Active Health System provides:

- Continuous health monitoring of over 1600 system parameters
- Logging of all configuration changes
- Consolidated health and service alerts with precise time stamps
- Agentless monitoring that does not affect application performance

For more information about the Active Health System, see the iLO user guide at the following website: **https://www.hpe.com/support/ilo-docs**.

Active Health System data collection

The Active Health System does not collect information about your operations, finances, customers, employees, or partners.

Examples of information that is collected:

- Server model and serial number
- Processor model and speed
- Storage capacity and speed
- Memory capacity and speed
- Firmware/BIOS and driver versions and settings

The Active Health System does not parse or change OS data from third-party error event log activities (for example, content created or passed through the OS).

Active Health System Log

The data collected by the Active Health System is stored in the Active Health System Log. The data is logged securely, isolated from the operating system, and separate from customer data. Host resources are not consumed in the collection and logging of Active Health System data.

When the Active Health System Log is full, new data overwrites the oldest data in the log.

It takes less than 5 minutes to download the Active Health System Log and send it to a support professional to help you resolve an issue.

When you download and send Active Health System data to Hewlett Packard Enterprise, you agree to have the data used for analysis, technical resolution, and quality improvements. The data that is collected is managed according to the privacy statement, available at **https://www.hpe.com/info/privacy**.

You can upload the log to HPE InfoSight for Servers to view the log data or create a support case for servers under a valid warranty or support contract. For more information, see the HPE InfoSight for Servers documentation at the following website: **https://www.hpe.com/support/infosight-servers-docs**.

HPE iLO 5

iLO 5 is a remote server management processor embedded on the system boards of supported HPE servers and compute modules. iLO enables the monitoring and controlling of servers from remote locations. iLO management is a powerful tool that provides multiple ways to configure, update, monitor, and repair servers remotely.

For more information about iLO, see the iLO user guide at the following website: **https://www.hpe.com/support/ilo-docs**.

iLO Federation

iLO Federation enables you to manage multiple servers from one system using the iLO web interface.

When configured for iLO Federation, iLO uses multicast discovery and peer-to-peer communication to enable communication between the systems in iLO Federation groups.

When you navigate to one of the iLO Federation pages, a data request is sent from the iLO system running the web interface to its peers, and from those peers to other peers until all data for the selected iLO Federation group is retrieved.

iLO supports the following features:

- Group health status—View server health and model information.
- Group virtual media—Connect URL-based media for access by a group of servers.

- Group power control—Manage the power status of a group of servers.
- Group power capping—Set dynamic power caps for a group of servers.
- Group firmware update—Update the firmware of a group of servers.
- Group license installation—Enter a license key to activate iLO licensed features on a group of servers.
- Group configuration—Add iLO Federation group memberships for multiple iLO systems.

Any user can view information on iLO Federation pages, but a license is required for using the following features: Group virtual media, Group power control, Group power capping, Group configuration, and Group firmware update.

For more information about iLO Federation, see the iLO user guide at the following website: **https://www.hpe.com/support/ilo-docs**.

iLO Service Port

The Service Port is a USB port with the label **iLO** on supported servers and compute modules.

To find out if your server or compute module supports this feature, see the server specifications document at the following website: **https://www.hpe.com/info/qs**.

When you have physical access to a server, you can use the Service Port to do the following:

- Download the Active Health System Log to a supported USB flash drive.

  When you use this feature, the connected USB flash drive is not accessible by the host operating system.

- Connect a client (such as a laptop) with a supported USB to Ethernet adapter to access the following:
  - iLO web interface
  - Remote console
  - iLO RESTful API
  - CLI

  Hewlett Packard Enterprise recommends the HPE USB to Ethernet Adapter (part number Q7Y55A).

  Some servers, such as the XL170r, require an adapter to connect a USB to Ethernet adapter to the iLO Service Port.

  Hewlett Packard Enterprise recommends the HPE Micro USB to USB Adapter (part number 789904-B21).

When you use the iLO Service Port:

- Actions are logged in the iLO event log.
- The server UID flashes to indicate the Service Port status.

  You can also retrieve the Service Port status by using a REST client and the iLO RESTful API.
- You cannot use the Service Port to boot any device within the server, or the server itself.
- You cannot access the server by connecting to the Service Port.
- You cannot access the connected device from the server.

For more information about the iLO Service Port, see the iLO user guide at the following website: **https://www.hpe.com/support/ilo-docs**.

iLO RESTful API

iLO includes the iLO RESTful API, which is Redfish API conformant. The iLO RESTful API is a management interface that server management tools can use to perform configuration, inventory, and monitoring tasks by sending basic HTTPS operations (GET, PUT, POST, DELETE, and PATCH) to the iLO web server.

To learn more about the iLO RESTful API, see the Hewlett Packard Enterprise website (**https://www.hpe.com/support/restfulinterface/docs**).

For specific information about automating tasks using the iLO RESTful API, see libraries and sample code at **https://www.hpe.com/info/redfish**.

 For more information, watch the **Redfish & How it works with HPE Server Management** video.

RESTful Interface Tool

The RESTful Interface Tool (iLOREST) is a scripting tool that allows you to automate HPE server management tasks. It provides a set of simplified commands that take advantage of the iLO RESTful API. You can install the tool on your computer for remote use or install it locally on a server with a Windows or Linux Operating System. The RESTful Interface Tool offers an interactive mode, a scriptable mode, and a file-based mode similar to CONREP to help decrease automation times.

For more information, see the following website: **https://www.hpe.com/info/resttool**.

iLO Amplifier Pack

iLO Amplifier Pack is an advanced server inventory, firmware and driver update solution that enables rapid discovery, detailed inventory reporting, firmware, and driver updates by leveraging iLO advanced functionality. iLO Amplifier Pack performs rapid server discovery and inventory for thousands of supported servers for the purpose of updating firmware and drivers at scale.

For more information about iLO Amplifier Pack, see the iLO Amplifier Pack User Guide at the following website: **https://www.hpe.com/support/ilo-ap-ug-en**.

Integrated Management Log

The IML records hundreds of events and stores them in an easy-to-view form. The IML timestamps each event with one-minute granularity.

You can view recorded events in the IML in several ways, including the following:

- From within HPE SIM
- From within the UEFI System Utilities
- From within the Embedded UEFI shell
- From within the iLO web interface

Intelligent Provisioning

Intelligent Provisioning is a single-server deployment tool embedded in ProLiant servers and HPE Synergy compute modules. Intelligent Provisioning simplifies server setup, providing a reliable and consistent way to deploy servers.

Intelligent Provisioning prepares the system for installing original, licensed vendor media and Hewlett Packard Enterprise-branded versions of OS software. Intelligent Provisioning also prepares the system to integrate optimized server support software from the Service Pack for ProLiant (SPP). SPP is a comprehensive systems software and firmware solution for ProLiant servers, server blades, their enclosures, and HPE Synergy compute modules. These components are preloaded with a basic set of firmware and OS components that are installed along with Intelligent Provisioning.

IMPORTANT:

HPE ProLiant XL servers do not support operating system installation with Intelligent Provisioning, but they do support the maintenance features. For more information, see "Performing Maintenance" in the Intelligent Provisioning user guide and online help.

After the server is running, you can update the firmware to install additional components. You can also update any components that have been outdated since the server was manufactured.

To access Intelligent Provisioning:

- Press **F10** from the POST screen and enter Intelligent Provisioning .
- From the iLO web interface using **Lifecycle Management**. **Lifecycle Management** allows you to access Intelligent Provisioning without rebooting your server.

Intelligent Provisioning operation

NOTE:

Intelligent Provisioning 3.62 and later requires iLO firmware version 2.44 or later.

Intelligent Provisioning includes the following components:

- Critical boot drivers
- Active Health System (AHS)
- Erase Utility
- Deployment Settings

IMPORTANT:

- Although your server is preloaded with firmware and drivers, Hewlett Packard Enterprise recommends updating the firmware upon initial setup. Also, downloading and updating the latest version of Intelligent Provisioning ensures the latest supported features are available.
- For ProLiant servers, firmware is updated using the Intelligent Provisioning Firmware Update utility.
- Do not update firmware if the version you are currently running is required for compatibility.

NOTE:

Intelligent Provisioning does not function within multihomed configurations. A multihomed host is one that is connected to two or more networks or has two or more IP addresses.

Intelligent Provisioning provides installation help for the following operating systems:

- Microsoft Windows Server
- Red Hat Enterprise Linux
- SUSE Linux Enterprise Server
- VMware ESXi/vSphere Custom Image
- ClearOS

Not all versions of an OS are supported. For information about specific versions of a supported operating system, see the OS Support Matrix on the Hewlett Packard Enterprise website (**https://www.hpe.com/info/ossupport**).

Management security

HPE ProLiant Gen10, HPE ProLiant Gen10 Plus, and HPE Apollo servers are built with some of the industry's most advanced security capabilities, out of the box, with a foundation of secure embedded management applications and firmware. The management security provided by HPE embedded management products enables secure support of modern workloads, protecting your components from unauthorized access and unapproved use. The range of embedded management and optional software and firmware available with the iLO Advanced license provides security features that help ensure protection,

detection, and recovery from advanced cyber attacks. For more information, see the HPE Gen10 and Gen10 Plus Security Reference Guide at **Hewlett Packard Enterprise Support Center**.

Scripting Toolkit for Windows and Linux

The STK for Windows and Linux is a server deployment product that delivers an unattended automated installation for high-volume server deployments. The STK is designed to support ProLiant servers. The toolkit includes a modular set of utilities and important documentation that describes how to apply these tools to build an automated server deployment process.

The STK provides a flexible way to create standard server configuration scripts. These scripts are used to automate many of the manual steps in the server configuration process. This automated server configuration process cuts time from each deployment, making it possible to scale rapid, high-volume server deployments.

For more information or to download the STK, see the **Hewlett Packard Enterprise website**.

UEFI System Utilities

The UEFI System Utilities is embedded in the system ROM. Its features enable you to perform a wide range of configuration activities, including:

- Configuring system devices and installed options.
- Enabling and disabling system features.
- Displaying system information.
- Selecting the primary boot controller or partition.
- Configuring memory options.
- Launching other preboot environments.

HPE servers with UEFI can provide:

- Support for boot partitions larger than 2.2 TB. Such configurations could previously only be used for boot drives when using RAID solutions.
- Secure Boot that enables the system firmware, option card firmware, operating systems, and software collaborate to enhance platform security.
- UEFI Graphical User Interface (GUI)

- An Embedded UEFI Shell that provides a preboot environment for running scripts and tools.
- Boot support for option cards that only support a UEFI option ROM.

Selecting the boot mode

This server provides two **Boot Mode** configurations: UEFI Mode and Legacy BIOS Mode. Certain boot options require that you select a specific boot mode. By default, the boot mode is set to **UEFI Mode**. The system must boot in **UEFI Mode** to use certain options, including:

- Secure Boot, UEFI Optimized Boot, Generic USB Boot, IPv6 PXE Boot, iSCSI Boot, NVMe Boot and Boot from URL
- Fibre Channel/FCoE Scan Policy



NOTE:

The boot mode you use must match the operating system installation. If not, changing the boot mode can impact the ability of the server to boot to the installed operating system.

Prerequisite

When booting to **UEFI Mode**, leave **UEFI Optimized Boot** enabled.

Procedure

1. From the **System Utilities** screen, select **System Configuration > BIOS/Platform Configuration (RBSU) > Boot Options > Boot Mode**.
2. Select a setting.
   - **UEFI Mode** (default)—Configures the system to boot to a UEFI compatible operating system.
   - **Legacy BIOS Mode**—Configures the system to boot to a traditional operating system in Legacy BIOS compatibility mode.
3. Save your setting.
4. Reboot the server.

Secure Boot

Secure Boot is a server security feature that is implemented in the BIOS and does not require special hardware. Secure Boot ensures that each component launched during the boot process is digitally signed and that the signature is validated against a set of trusted certificates embedded in the UEFI BIOS. Secure Boot validates the software identity of the following components in the boot process:

- UEFI drivers loaded from PCIe cards
- UEFI drivers loaded from mass storage devices
- Preboot UEFI Shell applications
- OS UEFI boot loaders

When Secure Boot is enabled:

- Firmware components and operating systems with boot loaders must have an appropriate digital signature to execute during the boot process.
- Operating systems must support Secure Boot and have an EFI boot loader signed with one of the authorized keys to boot. For more information about supported operating systems, see **https://www.hpe.com/servers/ossupport**.

You can customize the certificates embedded in the UEFI BIOS by adding or removing your own certificates, either from a management console directly attached to the server, or by remotely connecting to the server using the iLO Remote Console.

You can configure Secure Boot:

- Using the **System Utilities** options described in the following sections.
- Using the iLO RESTful API to clear and restore certificates. For more information, see the Hewlett Packard Enterprise website (**https://www.hpe.com/info/redfish**).
- Using the `secboot` command in the Embedded UEFI Shell to display Secure Boot databases, keys, and security reports.

Launching the Embedded UEFI Shell

Use the **Embedded UEFI Shell** option to launch the Embedded UEFI Shell. The Embedded UEFI Shell is a preboot command-line environment for scripting and running UEFI applications, including UEFI boot loaders. The Shell also provides CLI-based commands you can use to obtain system information, and to configure and update the system BIOS.

Prerequisites

- **Embedded UEFI Shell** is set to **Enabled**.

Procedure

1. From the **System Utilities** screen, select **Embedded Applications > Embedded UEFI Shell**.

   The **Embedded UEFI Shell** screen appears.

2. Press any key to acknowledge that you are physically present.

   This step ensures that certain features, such as disabling **Secure Boot** or managing the **Secure Boot** certificates using third-party UEFI tools, are not restricted.

3. If an administrator password is set, enter it at the prompt and press **Enter**.

   The `Shell>` prompt appears.

4. Enter the commands required to complete your task.

5. Enter the `exit` command to exit the Shell.

HPE Smart Storage Administrator

HPE SSA is the main tool for configuring arrays on HPE Smart Array SR controllers. It exists in three interface formats: the HPE SSA GUI, the HPE SSA CLI, and HPE SSA Scripting. All formats provide support for configuration tasks. Some of the advanced tasks are available in only one format.

The diagnostic features in HPE SSA are also available in the standalone software HPE Smart Storage Administrator Diagnostics Utility CLI.

During the initial provisioning of the server or compute module, an array is required to be configured before the operating system can be installed. You can configure the array using SSA.

HPE SSA is accessible both offline (either through HPE Intelligent Provisioning or as a standalone bootable ISO image) and online:

- Accessing HPE SSA in the offline environment

  > **IMPORTANT:** If you are updating an existing server in an offline environment, obtain the latest version of HPE SSA through Service Pack for ProLiant before performing configuration procedures.

  Using one of multiple methods, you can run HPE SSA before launching the host operating system. In offline mode, users can configure or maintain detected and supported devices, such as optional Smart Array controllers and integrated Smart Array controllers. Some HPE SSA features are only available in the offline environment, such as setting the boot controller and boot volume.

- Accessing HPE SSA in the online environment

This method requires an administrator to download the HPE SSA executables and install them. You can run HPE SSA online after launching the host operating system.

For more information, see HPE SSA online help.

HPE InfoSight for servers

The HPE InfoSight portal is a secure web interface hosted by HPE that allows you to monitor supported devices through a graphical interface.

HPE InfoSight for servers:

- Combines the machine learning and predictive analytics of HPE InfoSight with the health and performance monitoring of Active Health System (AHS) and HPE iLO to optimize performance and predict and prevent problems
- Provides automatic collection and analysis of the sensor and telemetry data from AHS to derive insights from the behaviors of the install base to provide recommendations to resolve problems and improve performance

For more information on getting started and using HPE InfoSight for servers, go to: **https://www.hpe.com/info/infosight-servers-docs**.

USB support

Hewlett Packard Enterprise Gen10 and Gen10 Plus servers support all USB operating speeds depending on the device that is connected to the server.

External USB functionality

Hewlett Packard Enterprise provides external USB support to enable local connection of USB devices for server administration, configuration, and diagnostic procedures.

For additional security, external USB functionality can be disabled through USB options in UEFI System Utilities.

Redundant ROM support

The server enables you to upgrade or configure the ROM safely with redundant ROM support. The server has a single ROM that acts as two separate ROM images. In the standard implementation, one side of the ROM contains the current ROM program version, while the other side of the ROM contains a backup version.

NOTE: The server ships with the same version programmed on each side of the ROM.

Safety and security benefits

When you flash the system ROM, the flashing mechanism writes over the backup ROM and saves the current ROM as a backup, enabling you to switch easily to the alternate ROM version if the new ROM becomes corrupted for any reason. This feature protects the existing ROM version, even if you experience a power failure while flashing the ROM.

Keeping the system current

Updating firmware or system ROM

To update firmware or system ROM, use one of the following methods:

- The **Firmware Update** option in the System Utilities.
- The `fwupdate` command in the **Embedded UEFI Shell**.
- Service Pack for ProLiant (SPP)
- HPE online flash components
- Moonshot Component Pack

Service Pack for ProLiant

SPP is a systems software and firmware solution delivered as a single ISO file download. This solution uses SUM as the deployment tool and is tested and supports HPE ProLiant, HPE BladeSystem, HPE Synergy, and HPE Apollo servers and infrastructure.

SPP, along with SUM and SUT, provides Smart Update system maintenance tools that systematically update HPE ProLiant, HPE BladeSystem, HPE Synergy, and HPE Apollo servers and infrastructure.

SPP can be used in an online mode on a server running Windows, Linux, or VMware vSphere ESXi, or in an offline mode where the server is booted to an operating system included in the ISO file.

The preferred method for downloading an SPP is using the SPP Custom Download at **https://www.hpe.com/servers/spp/custom**.

Introduction to Smart Update Manager

SUM is an innovative tool for maintaining and updating the firmware, drivers, and system software of HPE ProLiant, HPE BladeSystem, HPE Synergy, HPE Superdome Flex servers, and HPE Apollo servers, infrastructure, and associated options.

SUM identifies associated nodes you can update at the same time to avoid interdependency issues.

Key features of SUM include:

- Discovery engine that finds installed versions of hardware, firmware, and software on nodes.
- SUM deploys updates in the correct order and ensures that all dependencies are met before deploying an update.
- Interdependency checking.
- Automatic and step-by-step Localhost Guided Update process.
- Web browser-based user interface.
- Ability to create custom baselines and ISOs.
- Support for iLO Repository (Gen10 or later iLO 5 nodes only).
- Simultaneous firmware and software deployment for multiple remote nodes.
- Local offline firmware deployments with SPP deliverables.
- Extensive logging in all modes.

NOTE:
Support for HPE Integrity servers has been discontinued from SUM 8.x.

Integrated Smart Update Tools

Integrated Smart Update Tools (SUT) is the smart update solution for performing online firmware and driver updates. SUT is used with iLO 4, iLO 5, and with update solutions (management appliances such as iLO Amplifier Pack or HPE OneView and Smart Update Manager to stage, install, and activate firmware and driver updates.

The solution must be installed on the operating system, where it updates results through Rich Infrastructure Services (RIS) communication.

- **SUT**: Polls iLO to check for requests from SUM, iLO Amplifier Pack, or HPE OneView for updates through local iLO using the iLO channel interface driver installed on the OS and orchestrates staging, deploying, and activating updates. You can adjust the polling interval by issuing the appropriate command-line option provided by SUT. Performs inventory on target servers, stages deployment, deploys updates, and then reboots the servers.
- **iLO 5 with integrated Smart Update** (Gen10 or later servers only): Performs iLO Repository-based updates by downloading the components from iLO Repository when iLO Installation Queue has the components which can be updated by SUT.
- **iLO Amplifier Pack and HPE OneView**: Displays available updates for servers. Communicates with SUT (or SUT 1.x) to initiate updates using the iLO Redfish interface. SUT reports the status of updates to iLO Amplifier Pack through iLO Restful Interface.
- **SUM**: A tool for firmware and driver maintenance for HPE ProLiant servers and associated options.

NOTE:
SUM and iLO Amplifier Pack should not manage the same nodes.

Updating firmware from the System Utilities

Use the **Firmware Updates** option to update firmware components in the system, including the system BIOS, NICs, and storage cards.

Procedure

1. Access the System ROM Flash Binary component for your server from the Hewlett Packard Enterprise Support Center.
2. Copy the binary file to a USB media or iLO virtual media.
3. Attach the media to the server.
4. Launch the **System Utilities**, and select **Embedded Applications > Firmware Update**.
5. Select a device.

   The **Firmware Updates** screen lists details about your selected device, including the current firmware version in use.
6. Select **Select Firmware File**.
7. Select the flash file in the **File Explorer** list.

   The firmware file is loaded and the **Firmware Updates** screen lists details of the file in the **Selected firmware file** field.
8. Select **Image Description**, and then select a firmware image.

   A device can have multiple firmware images.
9. Select **Start firmware update**.

Updating the firmware from the UEFI Embedded Shell

Procedure

1. Access the System ROM Flash Binary component for your server from the Hewlett Packard Enterprise Support Center (**https://www.hpe.com/support/hpesc**).
2. Copy the binary file to a USB media or iLO virtual media.
3. Attach the media to the server.
4. Boot to the UEFI Embedded Shell.
5. To obtain the assigned file system volume for the USB key, enter `map -r`.
6. Change to the file system that contains the System ROM Flash Binary component for your server. Enter one of the `fsx` file systems available, such as `fs0:` or `fs1:`, and press **Enter**.
7. Use the `cd` command to change from the current directory to the directory that contains the binary file.

8. Flash the system ROM by entering `fwupdate -d BIOS -f filename`.
9. Reboot the server. A reboot is required after the firmware update in order for the updates to take effect and for hardware stability to be maintained.

Online Flash components

This component provides updated system firmware that can be installed directly on supported operating systems. Additionally, when used in conjunction with SUM, this Smart Component allows the user to update firmware on remote servers from a central location. This remote deployment capability eliminates the need for the user to be physically present at the server to perform a firmware update.

Drivers

> **IMPORTANT:** Always perform a backup before installing or updating device drivers.

Update drivers using any of the following **Smart Update Solutions**:

- Download the latest Service Pack for ProLiant (includes Smart Update Manager)
- Create a custom SPP download
- Download Smart Update Manager for Linux
- Download specific drivers
  To locate the drivers for a server, go to the **Hewlett Packard Enterprise Support Center website**, and then search for the product name/number.

Software and firmware

Update software and firmware before using the server for the first time, unless any installed software or components require an older version.

For system software and firmware updates, use one of the following sources:

- Download the SPP from the Hewlett Packard Enterprise website (**https://www.hpe.com/servers/spp/download**).
- Download individual drivers, firmware, or other system software components from the server product page in the Hewlett Packard Enterprise Support Center website (**https://www.hpe.com/support/hpesc**).

Operating system version support

For information about specific versions of a supported operating system, refer to the **operating system support matrix**.

HPE Pointnext Portfolio

HPE Pointnext delivers confidence, reduces risk, and helps customers realize agility and stability. Hewlett Packard Enterprise helps customers succeed through Hybrid IT by simplifying and enriching the on-premise experience, informed by public cloud qualities and attributes.

Operational Support Services enable you to choose the right service level, length of coverage, and response time to fit your business needs. For more information, see the Hewlett Packard Enterprise website:

https://www.hpe.com/us/en/services/operational.html

Utilize the Advisory and Transformation Services in the following areas:

- Private or hybrid cloud computing
- Big data and mobility requirements
- Improving data center infrastructure
- Better use of server, storage, and networking technology

For more information, see the Hewlett Packard Enterprise website:

https://www.hpe.com/services/consulting

Proactive notifications

30 to 60 days in advance, Hewlett Packard Enterprise sends notifications to subscribed customers on upcoming:

- Hardware, firmware, and software changes
- Bulletins
- Patches
- Security alerts

You can subscribe to proactive notifications on the **Hewlett Packard Enterprise website**.

Troubleshooting

NMI functionality

An NMI crash dump enables administrators to create crash dump files when a system is hung and not responding to traditional debugging methods.

An analysis of the crash dump log is an essential part of diagnosing reliability problems, such as hanging operating systems, device drivers, and applications. Many crashes freeze a system, and the only available action for administrators is to cycle the system power. Resetting the system erases any information that could support problem analysis, but the NMI feature preserves that information by performing a memory dump before a hard reset.

To force the OS to initiate the NMI handler and generate a crash dump log, the administrator can use the iLO Generate NMI feature.

Troubleshooting resources

Troubleshooting resources are available for HPE Gen10 and Gen10 Plus server products in the following documents:

- Troubleshooting Guide for HPE ProLiant Gen10 and Gen10 Plus servers provides procedures for resolving common problems and comprehensive courses of action for fault isolation and identification, issue resolution, and software maintenance.
- Error Message Guide for HPE ProLiant Gen10 servers and HPE Synergy provides a list of error messages and information to assist with interpreting and resolving error messages.
- Integrated Management Log Messages and Troubleshooting Guide for HPE ProLiant Gen10 and Gen10 Plus servers and HPE Synergy provides IML messages and associated troubleshooting information to resolve critical and cautionary IML events.

To access troubleshooting resources for your product, see the **Hewlett Packard Enterprise website**.

System battery replacement

System battery information

The server contains an internal lithium manganese dioxide, a vanadium pentoxide, or an alkaline battery that provides power to the real-time clock.

WARNING:
If this battery is not properly handled, a risk of the fire and burns exists. To reduce the risk of personal injury:

- Do not attempt to recharge the battery.
- Do not expose the battery to temperatures higher than 60°C (140°F).
- Do not expose the battery to extremely low air pressure as it might lead to explosion or leakage of flammable liquid or gas.
- Do not disassemble, crush, puncture, short external contacts, or dispose the battery in fire or water.

Removing and replacing the system battery

Prerequisites

Before you perform this procedure make sure that you have a flat-bladed, nonconductive tool.

Procedure

1. If installed, remove the front bezel.
2. Power down the server.
3. Remove all power:
   a. Disconnect each power cord from the power source.
   b. Disconnect each power cord from the server.
4. Disconnect all peripheral cables from the server.
5. Remove the server from the rack.
6. Remove the access panel.
7. Locate the battery.
8. Remove the system battery:
   a. Use a small flat-bladed, nonconductive tool to press the battery latch (callout 1).
   b. Remove the system battery from the socket (callout 2).

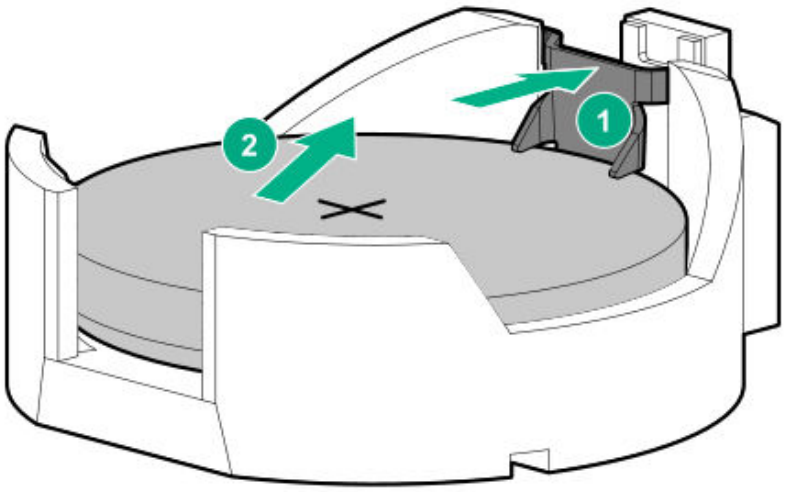

9. Install the system battery:

a. With the side of the battery showing the "+" sign facing up, insert the battery into the socket (callout 1).

b. Press the system battery down until it clicks into place (callout 2).

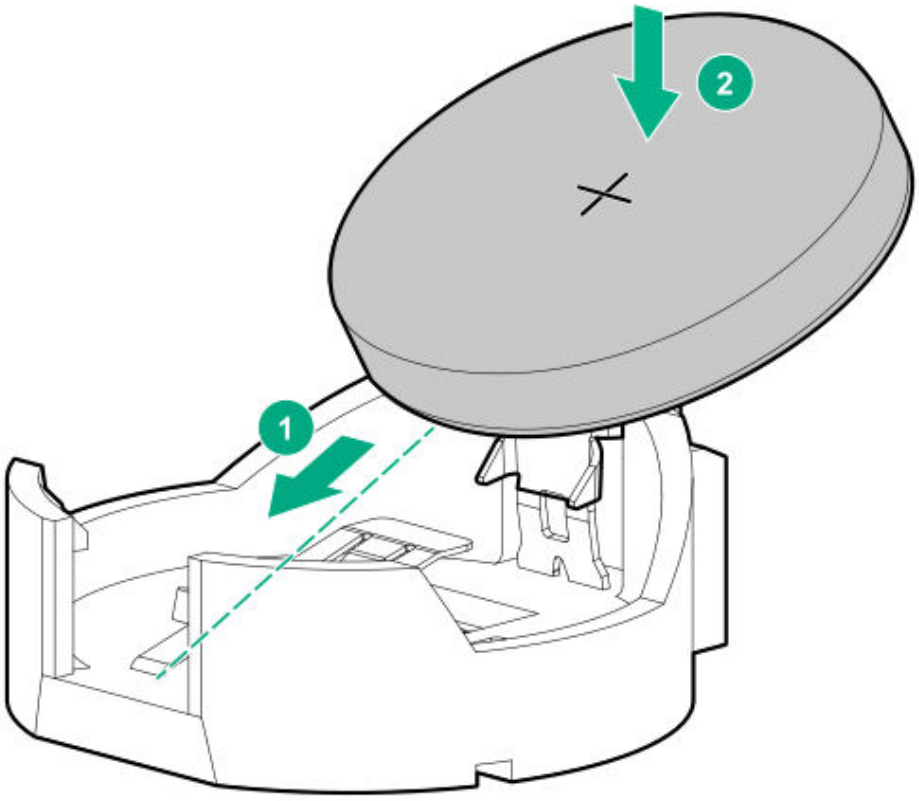

.0. Install the access panel.

.1. Install the server into the rack.

.2. Connect all peripheral cables to the server.

.3. Connect the power cords:

a. Connect each power cord to the server.

b. Connect each power cord to the power source.

.4. Power up the server.

.5. If removed, install the front bezel.

.6. Properly dispose of the old battery.

For more information about proper battery disposal, contact an authorized reseller or an authorized service provider.

Safety, warranty, and regulatory information

Regulatory information

To view the regulatory information for your product, view the Safety and Compliance Information for Server, Storage, Power, Networking, and Rack Products, available at the Hewlett Packard Enterprise Support Center:

https://www.hpe.com/support/Safety-Compliance-EnterpriseProducts

Additional regulatory information

Hewlett Packard Enterprise is committed to providing our customers with information about the chemical substances in our products as needed to comply with legal requirements such as REACH (Regulation EC No 1907/2006 of the European Parliament and the Council). A chemical information report for this product can be found at:

https://www.hpe.com/info/reach

For Hewlett Packard Enterprise product environmental and safety information and compliance data, including RoHS and REACH, see:

https://www.hpe.com/info/ecodata

For Hewlett Packard Enterprise environmental information, including company programs, product recycling, and energy efficiency, see:

https://www.hpe.com/info/environment

Notices for Eurasian Economic Union

EAC

Manufacturer and Local Representative Information

Manufacturer information:

Hewlett Packard Enterprise, 6280 America Center Drive, San Jose, CA 95002 U.S.

Local representative information Russian:

- **Russia**
  ООО "Хьюлетт Паккард Энтерпрайз", Российская Федерация, 125171, г. Москва, Ленинградское шоссе, 16А, стр.3, Телефон: +7 499 403 4248 Факс: +7 499 403 4677
- **Kazakhstan**
  ТОО «Хьюлетт-Паккард (К)», Республика Казахстан, 050040, г. Алматы, Бостандыкский район, проспект Аль-Фараби, 77/7, Телефон/факс: + 7 727 355 35 50

Local representative information Kazakh:

- **Russia**
  ЖШС "Хьюлетт Паккард Энтерпрайз", Ресей Федерациясы, 125171, Мәскеу, Ленинград тас жолы, 16А блок 3, Телефон: +7 499 403 4248 Факс: +7 499 403 4677
- **Kazakhstan**
  ЖШС «Хьюлетт-Паккард (К)», Қазақстан Республикасы, 050040, Алматы к., Бостандык ауданы, Әл-Фараби даңғ ылы, 77/7, Телефон/факс: +7 727 355 35 50

Manufacturing date:

The manufacturing date is defined by the serial number.

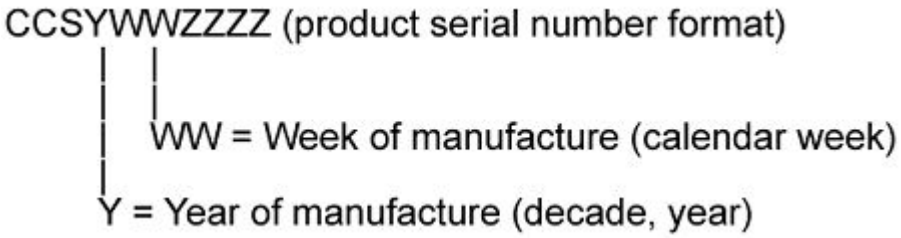

If you need help identifying the manufacturing date, contact **tre@hpe.com**.

Turkey RoHS material content declaration

Türkiye Cumhuriyeti: AEEE Yönetmeliğine Uygundur

Ukraine RoHS material content declaration

Обладнання відповідає вимогам Технічного регламенту щодо обмеження використання деяких небезпечних речовин в електричному та електронному обладнанні, затвердженого постановою Кабінету Міністрів України від 3 грудня 2008 № 1057

GS Gloss declaration

The product is not suitable for use at visual display workplaces according to §2 of the German Ordinance for Work with Visual Display Units.

Das Produkt ist nicht für den Einsatz an Bildschirmarbeitsplätzen im Sinne § 2 der Bildschirmarbeitsverordnung geeignet.

Warranty information

To view the warranty information for your product, see the links provided below:

HPE ProLiant and IA-32 Servers and Options

https://www.hpe.com/support/ProLiantServers-Warranties

HPE Enterprise and Cloudline Servers

https://www.hpe.com/support/EnterpriseServers-Warranties

HPE Storage Products

https://www.hpe.com/support/Storage-Warranties

HPE Networking Products

https://www.hpe.com/support/Networking-Warranties

Specifications

For more information on cable, power, environmental, compliance, and general specifications, see the **HPE Compute Transceiver and Cable Hardware Matrix**.

Environmental specifications

Specifications	Value
Temperature range*	—
Operating	10°C to 35°C (50°F to 95°F)
Nonoperating	-30°C to 60°C (-22°F to 140°F)
Relative humidity (nonc ondensing)	—
Operating	8% to 90% 28°C (82.4°F) maximum wet bulb temperature
Nonoperating	5 to 95% 38.7°C (101.7°F) maximum wet bulb temperature
Altitude	—
Operating	3050 m (10,000 ft). This value may be limited by th e type and number of options installed. Maximum all owable altitude change rate is 457 m/min (1500 ft/m in).
Nonoperating	9144 m (30,000 ft). Maximum allowable altitude ch ange rate is 457 m/min (1500 ft/min).

Standard operating support

10°C to 35°C (50°F to 95°F) at sea level with an altitude derating of 1.0°C per every 305 m (1.8°F per every 1000 ft) above sea level to a maximum of 3050 m (10,000 ft), no direct sustained sunlight. Maximum rate of change is 20°C/hr (36°F/hr). The upper limit and rate of change may be limited by the type and number of options installed.

System performance during standard operating support may be reduced if operating above 30°C (86°F).

Extended ambient operating support

For approved hardware configurations, the supported system inlet range is extended to be: 5°C to 10°C (41°F to 50°F) and 35°C to 40°C (95°F to 104°F) at sea level with an altitude derating of 1.0°C per every 175 m (1.8°F per every 574 ft) above 900 m (2953 ft) to a maximum of 3050 m (10,000 ft). The approved hardware configurations for this system are listed at the **Hewlett Packard Enterprise website**.

40°C to 45°C (104°F to 113°F) at sea level with an altitude derating of 1.0°C per every 125 m (1.8°F per every 410 ft) above 900 m (2953 ft) to a maximum of 3050 m (10,000 ft). The approved hardware configurations for this system are listed on the **Hewlett Packard Enterprise website**.

System performance may be reduced if operating in the extended ambient operating range.

Mechanical specifications

Specification	Value
Height	4.32 cm (1.70 in)
Depth	38.22 cm (15.05 in)
Width	43.46 cm (17.11 in)
Weight, maximum	9.46 kg (20.85 lb)
Weight, minimum	6.0 kg (13.22 lb)

Power supply specifications

Depending on the installed options and the regional location where the server was purchased, the server can be configured with one of the following power supplies:

- ATX 290 W Non-hot-plug Power Supply (92% efficiency)
- ATX 290 W Platinum Non-hot-plug Power Supply (94% efficiency)

- HPE 500 W Flex Slot Platinum Hot-plug Low Halogen Power Supply
- HPE 800W Flex Slot -48VDC Hot plug Low Halogen Power Supply

These are entry class power supply products for ProLiant Servers. For detailed power supply specifications, see the QuickSpecs on the **Hewlett Packard Enterprise website**.

ATX 290 W Non-hot-plug Power Supply (92% efficiency)

Specification	Value
Input requirements	—
Rated input voltage	100 VAC to 240 VAC
Rated input frequency	50 Hz to 60 Hz
Rated input current	5.5 A
Maximum rated input power	331 W at 115 VAC 330 W at 230 VAC
Efficiency	No less than 88% at 100% load No less than 92% at 50% load No less than 88% at 20% load
Power supply output	—
Rated steady-state power	290 W
Maximum peak power	366 W
Rated output power	290 W

ATX 290 W Platinum Non-hot-plug Power Supply (94% efficiency)

Specification	Value
Input requirements	—

Specification	Value
Rated input voltage	100 VAC to 240 VAC
Rated input frequency	50 Hz to 60 Hz
Rated input current	5.5 A
Rated input power	331 W at 115 VAC 319 W at 230 VAC
Efficiency	At 230 VAC/50 Hz: No less than 91% at 100% load No less than 94% at 50% load No less than 90% at 20% load No less than 80% at 10% load At 115 VAC/60 Hz: No less than 87.6% at 100% load No less than 89.7% at 50% load No less than 87.2% at 20% load No less than 80.8% at 10% load
Power supply output	—
Rated steady-state power	290 W
Maximum peak power	366 W
Rated output power	290 W

HPE 500 W Flex Slot Platinum Hot-plug Low Halogen Power Supply

Specification	Value
Input requirements	—
Rated input voltage	100 VAC to 240 VAC 240 VDC for China only
Rated input frequency	50 Hz to 60 Hz Not applicable to 240 VDC

Specification	Value
Rated input current	5.8 A at 100 VAC 2.8 A at 200 VAC 2.4 A at 240 VDC for China only
Maximum rated input power	557 W at 100 VAC 539 W at 200 VAC 537 W at 240 VDC for China only
BTUs per hour	1902 at 100 VAC 1840 at 200 VAC 1832 at 240 VDC for China only
Power supply output	—
Rated steady-state power	500 W at 100 VAC to 127 VAC input 500 W at 100 VAC to 240 VAC input 500 W at 240 VDC input for China only
Maximum peak power	500 W at 100 VAC to 127 VAC input 500 W at 100 VAC to 240 VAC input 500 W at 240 VDC input for China only

HPE 800W Flex Slot -48VDC Hot plug Low Halogen Power Supply

Specification	Value
Input requirements	—
Rated input voltage	-40 VDC to -72 VDC -48 VDC
Rated input current	24 A at -40 VDC
Rated input power (W)	874 W at -40 VDC

Specification	Value
Rated input power (BTUs per hour)	2983 at -40 VDC
Power supply output	—
Rated steady-state power (W)	800 W at -40 VDC to -72 VDC
Maximum peak power (W)	800 W at -40 VDC to -72 VDC
Maximum peak power	800 W at 200 VAC to 277 VAC 800 W at -40VDC to -72 VDC

WARNING: To reduce the risk of electric shock or energy hazards:

- This equipment must be installed by trained service personnel.
- Connect the equipment to a reliably grounded secondary circuit source. A secondary circuit has no direct connection to a primary circuit and derives its power from a transformer, converter, or equivalent isolation device.
- The branch circuit overcurrent protection must be rated 27 A.

CAUTION: This equipment is designed to permit the connection of the earthed conductor of the DC supply circuit to the earthing conductor at the equipment.

If this connection is made, all of the following must be met:

- This equipment must be connected directly to the DC supply system earthing electrode conductor or to a bonding jumper from an earthing terminal bar or bus to which the DC supply system earthing electrode conductor is connected.
- This equipment must be located in the same immediate area (such as adjacent cabinets) as any other equipment that has a connection between the earthed conductor of the same DC supply circuit and the earthing conductor, and also the point of earthing of the DC system. The DC system must be earthed elsewhere.
- The DC supply source is to be located within the same premises as the equipment.
- Switching or disconnecting devices must not be in the earthed circuit conductor between the DC source and the point of connection of the earthing electrode conductor.

Websites

General websites

Single Point of Connectivity Knowledge (SPOCK) Storage compatibility matrix

https://www.hpe.com/storage/spock

Storage white papers and analyst reports

https://www.hpe.com/storage/whitepapers

For additional websites, see Support and other resources.

Product websites

HPE ProLiant DL20 Gen10 Server

https://www.hpe.com/servers/dl20-gen10

HPE ProLiant DL20 Gen10 Server support page

https://www.hpe.com/support/dl20gen10

HPE ProLiant DL20 Gen10 Server user documents

https://www.hpe.com/info/dl20gen10-docs

Support and other resources

Accessing Hewlett Packard Enterprise Support

- For live assistance, go to the Contact Hewlett Packard Enterprise Worldwide website:

  https://www.hpe.com/info/assistance

- To access documentation and support services, go to the Hewlett Packard Enterprise Support Center website:

  https://www.hpe.com/support/hpesc

Information to collect

- Technical support registration number (if applicable)
- Product name, model or version, and serial number
- Operating system name and version
- Firmware version
- Error messages
- Product-specific reports and logs
- Add-on products or components
- Third-party products or components

ClearCARE technical support

Support for ClearOS and ClearVM is not provided by Hewlett Packard Enterprise. Support for ClearOS and ClearVM is purchased and delivered by ClearCenter. You can purchase single support incidents by submitting a support ticket to ClearCenter, or you can purchase a Bronze, Silver, Gold, or Platinum ClearCARE subscription. For more information, go to the ClearOS website:

https://www.clearos.com/

Several levels of professional technical support are available to licensed users. For more information, go to the ClearCARE support website:

https://www.clearos.com/products/support/clearcare-overview

Accessing updates

- Some software products provide a mechanism for accessing software updates through the product interface. Review your product documentation to identify the recommended software update method.
- To download product updates:

  Hewlett Packard Enterprise Support Center

  https://www.hpe.com/support/hpesc

  Hewlett Packard Enterprise Support Center: Software downloads

  https://www.hpe.com/support/downloads

  My HPE Software Center

  https://www.hpe.com/software/hpesoftwarecenter

- To subscribe to eNewsletters and alerts:

  https://www.hpe.com/support/e-updates

- To view and update your entitlements, and to link your contracts and warranties with your profile, go to the Hewlett Packard Enterprise Support Center **More Information on Access to Support Materials** page:

  https://www.hpe.com/support/AccessToSupportMaterials

IMPORTANT:

Access to some updates might require product entitlement when accessed through the Hewlett Packard Enterprise Support Center. You must have an HPE Passport set up with relevant entitlements.

Customer self repair

Hewlett Packard Enterprise customer self repair (CSR) programs allow you to repair your product. If a CSR part needs to be replaced, it will be shipped directly to you so that you can install it at your convenience. Some parts do not qualify for CSR. Your Hewlett Packard Enterprise authorized service provider will determine whether a repair can be accomplished by CSR.

For more information about CSR, contact your local service provider.

Remote support

Remote support is available with supported devices as part of your warranty or contractual support agreement. It provides intelligent event diagnosis, and automatic, secure submission of hardware event notifications to Hewlett Packard Enterprise, which initiates a fast and accurate resolution based on the service level of your product. Hewlett Packard Enterprise strongly recommends that you register your device for remote support.

If your product includes additional remote support details, use search to locate that information.

HPE Get Connected

https://www.hpe.com/services/getconnected

HPE Pointnext Tech Care

https://www.hpe.com/services/techcare

HPE Datacenter Care

https://www.hpe.com/services/datacentercare

Documentation feedback

Hewlett Packard Enterprise is committed to providing documentation that meets your needs. To help us improve the documentation, use the **Feedback** button and icons (located at the bottom of an opened document) on the Hewlett Packard Enterprise Support Center portal (**https://www.hpe.com/support/hpesc**) to send any errors, suggestions, or comments. All document information is captured by the process.