RETIRED: This document has been officially retired, and the base products listed herein are now considered obsolete and are no longer available for sale. Consequently, the information contained within may no longer be current. This document is provided exclusively for reference and informational purposes.

QuickSpecs

Overview

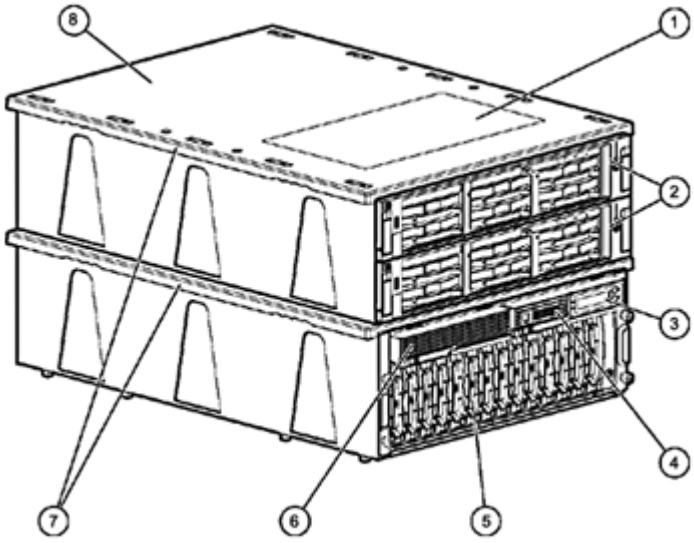

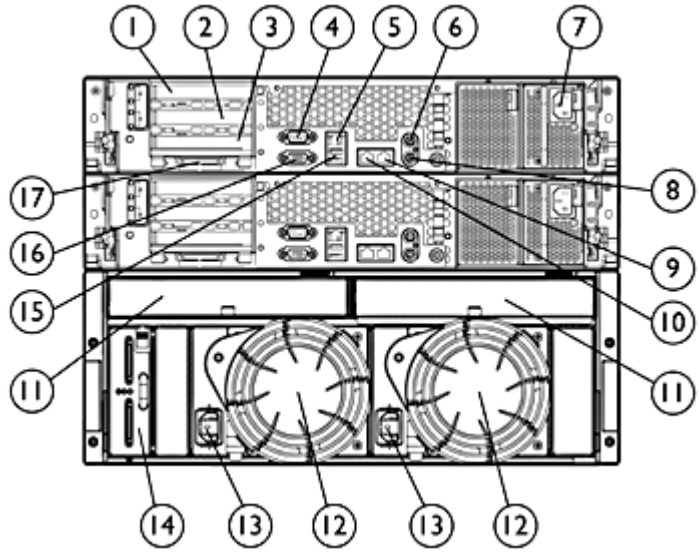

Front View:

1. Cluster Component Label
2. Two 2U Servers
3. MSA500 G2 Controller
4. MSA500 G2 Controller LED
5. 4U Shared Storage with 14 Hot Plug Hard drives Bays
6. Redundant MSA500G2 Controller Bay
7. Lifting Rails
8. Configuration Fixture

ProLiant DL380 G4 Rear View:

1. Hot-plug or non-hot-plug PCI-X expansion slot 3, 64 bit/100 MHz, bus B /PCI Express x4 slot 2, bus B
   NOTE: x8 PCI Express cards are supported on the SCSI models and will run at x4 speeds. SAS models do not support PCI Express cards.
2. Hot-plug or non-hot-plug PCI-X expansion slot 2, 64 bit/100 MHz, bus B / PCI Express x4 slot 1, bus A
   NOTE: x8 PCI Express cards are supported on the SCSI models and will run at x4 speeds. SAS models do not support PCI Express cards.
3. Non-hot-plug PCI-X expansion slot 1, 64 bit/133 MHz, bus A
4. Serial connector
5. iLO connector
6. Mouse connector
7. Power cord connector
8. Keyboard connector
9. NIC 1 connector
10. NIC 2 connector
15. USB connectors
16. Video connector
17. VHDCI SCSI connector (port 1)
    NOTE: This feature applies only to SCSI models.

MSA500 G2 Rear View:

11. Interconnect blanks (required for proper airflow)
12. Power supply/blower assemblies
13. AC power connectors

14. 2-Port Shared Storage Module

HP ProLiant DL380 Generation 4 (G4) Packaged Cluster with MSA500 G2 - Racked

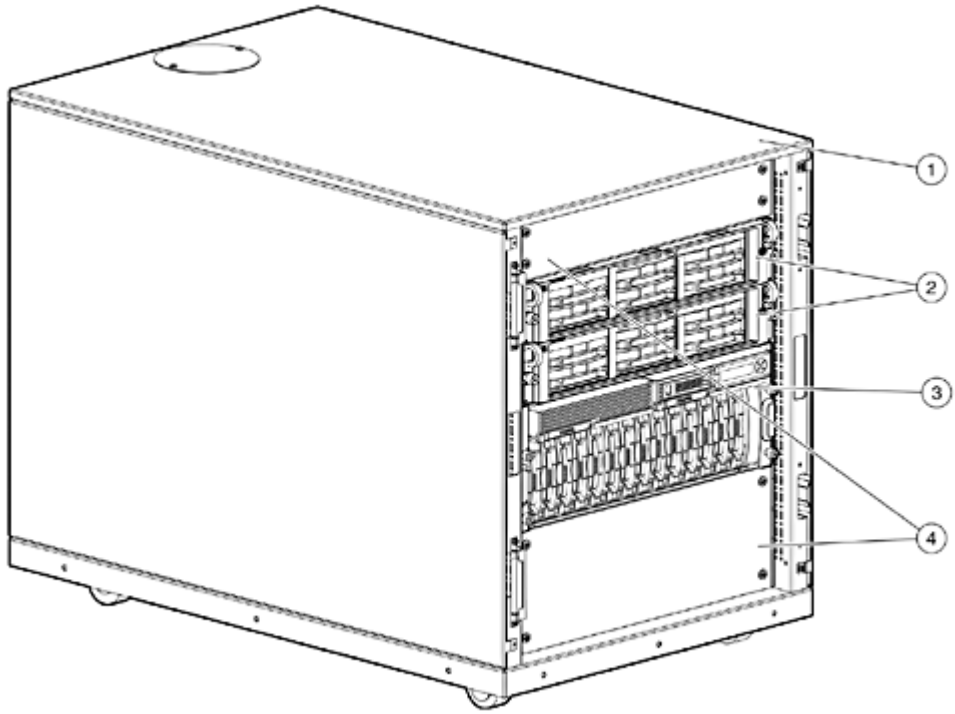

1. 14U rack
2. Two 2U Servers
3. 4U Shared Storage with 14 Hot Plug Drives Bays
4. Open rack space for options (6U total)

What's New

- Features two HP ProLiant DL380 G4 servers with 3.6 GHz-2MB cache/800 MHz FSB w/ Redundant Fans
- MSA500 G2 controller, 4-Port Shared storage module
- Smart Array Multipath Software
- 2 Smart Array 642 Controllers
- Configure-To-Order (CTO) capability is offered by HP inside sales

At A Glance

The ProLiant DL380 Packaged Cluster with MSA500 G2 sets the standard for performance and value in the high availability enterprise. The Package Cluster consists of two ProLiant DL380 G4 award-winning servers and a Modular Smart Array 500 G2 shared storage cabinet. These are pre-packaged in a cost effective, space efficient fixture giving you the most affordable clustering solution for Windows Server 2003 Enterprise Edition, Novell Netware and Linux. Our Racked Model factory integrates the packaged cluster in a 14U Rack. This Racked model arrives in a single package on a shock pallet. It is ideal for remote locations or rack mounted in your datacenter running alongside your other ProLiant servers.

The ProLiant DL380 G4 Package Cluster with MSA500 G2 complements your IT investment by providing high availability uptime for your business critical applications. Specifically designed to ensure outstanding performance and seamless integration throughout the

Overview

entire enterprise, the ProLiant DL380 Package Cluster with MSA500 G2 offers an excellent return on investment by drastically reducing downtime.

- DL380 G4 Package Cluster features:
  - Two HP ProLiant DL380 G4 Servers (1 processor per server) plus the HP StorageWorks Modular Smart Array 500 G2 storage system combined in an 8U configuration fixture or an HP 14U rack
  - Supports Ultra320 RAID controller with 256-MB battery-backed cache, upgrade to 512-MB cache
  - End-to-end Ultra320 SCSI technology
  - Increase standard battery-backed cache to 256MB on the MSA500 G2 controller
  - Rapid Drive Rebuild technology in MSA500 G2 for 5X increase in disk drive rebuilds Modular Smart Array 500 G2
  - Up to 4-Node high availability clustering for Linux and NetWare; up to 2-Node high availability clustering for Windows Server 2003, enterprise edition
- HP ProLiant DL380 G4 Features - Per Server:
- Processors:
  - Intel® Xeon® 3.6 GHz processors with 64-bit extensions with 2MB of L2 cache
  - 800MHz Front Side Bus
  - Intel® E7520 Chipset
- Memory:
  - Up to 12GB of PC2-3200 DDR2 SDRAM running at 400MHz
- Server Storage Controller:
  - Integrated Ultra320 Smart Array 6i Plus Controller with 64MB RAM and optional 128MB Battery-Backed Write Cache (BBWC) Enabler option kit
- Internal Drive Support:
  - Support for up to six Ultra320 SCSI hot plug hard drives or for five hot plug hard drives and one DAT hot plug tape drive
  - Internal hot plug capacity 1.80TB standard (6 x 300GB U320 HDD)
  - Optional dual channel drive backplane
- Network Controller:
  - Embedded NC7782 PCI-X Gigabit Server Adapter
- Expansion Slots:
  - 3 Total PCI-X slots: (2) non-hot plug 64-bit/100MHz slots; (1) non-hot plug 64-bit/133MHz slot
  - Optional PCI-X Hot-Plug cage
  - Optional PCI-E Non-hot plug Cage (2) x 4
- USB 2.0 Ports:
  - 3 Total: 1front; 2 rear accessible ports
- Redundancy:
  - 575-Watt Hot Plug Power Supply (with optional redundancy)
  - Redundant Hot Pluggable Fans standard
- Management:
  - Integrated Lights-Out (iLO) Management standard on system board
  - Automatic Server Recovery (ASR), ROM Based Setup Utility (RBSU), HP System Insight Manager, Status LEDs including system health and UID and SmartStart
- Form Factor:
  - Rack (2U), (3.5-inch)
- Deployment/Serviceability:
  - Quick Deploy Rail System includes sliding universal rails and an ambidextrous cable management arm for easy serviceability and in-rack tool-less access to major components
  - Tool-less rack-rail included supports round and square hole racks
- Warranty:
  - This product is covered by a global limited warranty and supported by HP Services and a worldwide network of HP Authorized Channel Partners resellers. Hardware diagnostic support and repair is available for three years from date of purchase. Support for software and initial setup is available for 90 days from date of purchase. Enhancements to

warranty services are available through HP Care Pack services or customized service agreements. SATA hard drives have a one-year warranty.

NOTE: Server Warranty includes 3-Year Parts, 3-Year Labor, 3-Year Onsite support with next business day response. Additional information regarding worldwide limited warranty and technical support is available at: http://h18004.www1.hp.com/products/servers/platforms/warranty/index.html

- HP StorageWorks Modular Smart Array 500 G2 features:
  - Total storage capacity of 4.20TB (14 x 300GB U320 HDD)
  - Up to 4-Node high availability clustering for Linux and NetWare; optional 4-port module or HA kit required
  - Up to 2-Node high availability clustering for Windows Server 2003, enterprise edition
  - Shared storage for up to 4 ProLiant servers
  - Boot from storage - move all disks to external storage for best capacity utilization
  - Redundant capable Smart Array Controllers
  - Multipath connectivity option with load balancing
  - Redundant power supplies and fans standard
  - Convertible to HP StorageWorks Modular Smart Array 1000
  - 3 year warranty with next day on site service
  - Pre-failure warranty that covers disk drives

Standard Features

NOTE: For the Standard Features shipped in the "Factory Integrated Models", please see the "Configuration Information - Factory Integrated Models" section.

Server	HP ProLiant DL380 G4 Server (Qty 2) NOTE: Complete information on the server can be found in the following QuickSpecs: http://h10010.www1.hp.com/wwpc/pscmisc/vac/us/en/ss/proliant/dl380g4-models.html?jumpid=reg_R1002_USEN	
Processor (per server)	Intel® Xeon® Processor 3.6 GHz	
Cache Memory (per processor)	2MB second-level ECC cache (full speed)	
Upgradeability (per server)	Upgradeable to dual processing	
Chipset (per server)	Intel® E7520 Chipset NOTE: For more information regarding Intel® chipsets, please see the following URL: http://www.intel.com/products/server/chipsets/.	
Memory Protection	Online spare Advanced ECC	
Memory (per server)	Type Standard Maximum	PC2-3200 DDR2 SDRAM running at 400MHz 1 GB 12 GB
Network Controller (per server)	Embedded NC7782 PCI-X Gigabit Server Adapter	

Standard Features

PCI-X Non Hot-Plug Riser

Expansion Slots	Slot Number	Bus Speed	Bus Number*	Device Number**	Hot Plug	PCI Voltage	NOTES
	1	64-it/133MHz PCI-X	10	1	no	3.3 Volt	Universal cards are supported
	2	64-it/100MHz PCI-X	6	1	no	3.3 Volt	Universal cards are supported
	3	64-it/100MHz PCI-X	6	2	no	3.3 Volt	Universal cards are supported

* Default bus assignment. Inserting cards with PCI bridges may alter the actual bus assignment number.
** Slots are enumerated differently based on OS. MS OS's enumerate from lowest to highest Device ID by bus (starting with the lowest bus).
NOTE: All slots can accept universal keyed PCI cards.

Storage Controllers (per server)	Smart Array 6i Controller (Ultra320) (integrated on system board) NOTE: For complete list of devices supported the Smart array 6i Controller see the following: http://h18000.www1.hp.com/products/quickspecs/12030_div/12030_div.html (Worldwide)		
Storage (per server)	Optical Drive	24x IDE CD-ROM Drive (Universal Media Bay)	
	Hard Drives	None	
Maximum Internal Storage	Hot Plug SCSI	1.80TB	6 x 300GB Ultra320 HDD
Interfaces (per server)	Serial	1	
	Pointing Device (Mouse)	1	
	Graphics	1	
	Keyboard	1	
	External SCSI	1	
	Network RJ-45	3 (1 for iLO)	
	USB 2.0 Ports	3 total: 1 front, 2 back NOTE: Please see the following URL for additional information regarding USB support: http://h18004.www1.hp.com/products/servers/platforms/usb-support.html	
Graphics (per server)	Integrated ATI Rage XL Video Controller with 8-MB SDRAM Video Memory		
Form Factor (per server)	2U per server		

Standard Features

Server Management Stand Alone Software Product - ProLiant Essentials	HP Systems Insight Manager	HP Systems Insight Manager (HP SIM) provides a unified, secure and extensible standards-based environment to centrally manage servers, storage and other infrastructure devices, (both HP and non-HP) across multiple operating system platforms.
	ProLiant Essentials Rapid Deployment Pack	Rapid Deployment Pack (RDP) extends HP Systems Insight Manager with a complete deployment solution for HP ProLiant servers. RDP provides a central location to configure server hardware, deploy Windows, Linux and VMware ESX operating environments and install HP ProLiant Support Pack drivers using images and scripted profiles. For more information, visit: http://www.hp.com/servers/rdp.
	ProLiant Essentials Performance Management Pack	Performance Management Pack (offered exclusively through the Insight Control suites) - a performance management solution that identifies and explains hardware performance bottlenecks on ProLiant servers and attached options enabling users to better utilize their valuable resources
	Integrated Lights-Out Advanced Pack	Upgrades the iLO 2 processor with comprehensive remote control including Virtual KVM remote graphical console, enhanced console sharing and replay, virtual media (floppy, CD/DVD, USB key), virtual folders, and enterprise security (directory services and two-factor authentication).
	NOTE: Flexible and volume quantity license kits are available for ProLiant Essentials Value Packs. Refer to: http://www.hp.com/servers/proliantessentials or the various ProLiant Essentials Value Pack product QuickSpecs for more information.	
Core Infrastructure Management	SmartStart	SmartStart is a tool that simplifies server setup, providing a rapid way to deploy reliable and consistent server configurations. For more information, please visit the SmartStart Web site at: http://www.hp.com/servers/smartstart. SmartStart version supported (minimum): SmartStart 7.51.
	Insight Management Agents	The Insight Management Agents should be installed on all HP servers to present system instrumentation, health and configuration information into HP Systems Insight Manager and the HP System Management Homepage. The HP System Management Homepage aggregates systems data from Insight Management Agents and other HP management tools, providing a consolidated browser-based interface for managing individual servers. Insight Management Agents and The HP System Management Homepage are included on ProLiant Support Packs, and can also be installed using the server profiles provided with the ProLiant Essentials Rapid Deployment Pack. For additional information about the Management Agents and the HP System Management Homepage please visit the management Web site at: http://www.hp.com/servers/manage.
	Subscriber's Choice	Subscriber's Choice Driver and Support Alerts/Notifications is a web-based email subscription service that provides software and driver change notifications for ProLiant products. Sign up at: http://www.hp.com/go/subscriberschoice and customize your profile to receive various new alerts as they become available, on a weekly or monthly basis.

Standard Features

	ProLiant Support Packs and ROMPaq, software	The latest software, drivers, and firmware fully optimized and tested for your ProLiant server and options, available through ProLiant Support Packs the ProLiant Essentials Rapid Deployment Pack, SmartStart or downloaded from software and drivers download pages website at: http://www.hp.com/go/support.
Industry Standard Compliance		ACPI 1.0b Compliant PCI-X and PCI 2.2 Compliant WOL Support Microsoft® Logo certifications USB version 1.1
Security		Power-on password Keyboard password Diskette drive control Diskette boot control QuickLock, Network Server Mode Serial interface control Administrator's password
Server Power Cords		Four (4) total Lowline power cords ship standard (per cluster) - US, Japan, Europe. Sixteen (16) total Lowline power cords ship standard (per cluster) - APD, GCD, PRC Localized cables included with geographic specific models in other world regions.
Power Supply (per server)		575 Watt, CE Mark Compliant Optional Hot Plug Redundant Power Supply Capability
UPS and PDU Power Cord Matrix		Please see the UPS and PDU cable matrix that lists cable descriptions, requirements, and specifications for UPS and PDU units: http://h18004.www1.hp.com/products/servers/proliantstorage/power-protection/index.html
System Fans (per server)		Each server contains 8 hot plug fans standard NOTE: This applies to only cluster sku 381367-xx1 and 381369-xx1.
Required Cabling		For required cabling information, refer to the HP Web site at: http://h18004.www1.hp.com/solutions/enterprise/highavailability/dl380/index.html

Standard Features

DL380 G4 Packaged Cluster with MSA500 G2 Packaging	8U Configuration Fixture - Recyclable ABS Unique cabling with positive identification (secured to storage configuration fixture) Two 6 foot SCSI cables One 6 foot Ethernet cross over cables Shock resistant pallet
DL380 G4 Packaged Cluster with MSA500 G2, Racked Packaging	HP Rack S10614 Shock Pallet (14U) - carbon, metallic graphite Shock resistant pallet Servers & Storage are rack installed Fully pre-wired and Factory Integrated Two 6 foot SCSI cables
Shared Storage	Modular Smart Array 500 G2 (Qty 1) NOTE: Complete information on the storage can be found in the following QuickSpecs: http://h18004.www1.hp.com/storage/disk_storage/msa_diskarrays/san_arrays/index.html
Documentation	Cluster set-up poster and configuration guide
OS Support	Microsoft Cluster Service • Microsoft Windows Server 2003 Enterprise Edition • Microsoft Windows 2000 Advanced Server Novell Cluster Service • Novell NetWare HP Service Guard Cluster Service for Linux • Red Hat Enterprise Linux • SUSE Linux Enterprise Server SteelEye's LifeKeeper for Linux • Red Hat Enterprise Linux • SUSE Linux Enterprise Server NOTE: For more complete and up-to-date information on how to buy server operating systems from HP please visit the OS product site at: http://h18004.www1.hp.com/products/servers/software/OEM.html NOTE: For a more complete and up-to-date listing of supported OSs and versions, please visit our OS Support Matrix at: http://www.hp.com/go/supportos. NOTE: Please refer to compatibility matrix: http://www.hp.com/products/sharedstorage for latest compatibility information. NOTE: For more Linux OS support & certification information, please visit our the ProLiant & BladeSystem Server Linux matrix: http://h18004.www1.hp.com/products/servers/linux/hpLinuxcert.html

Standard Features

Packaged Cluster Software Components

The Packaged Cluster utilizes a single, consistent set of utility software for storage and RAID management, setup, configuration and troubleshooting. This consistency reduces the cost of ownership by reducing the training and technical expertise necessary to install and maintain your HP server storage solution.

Configuration

- Array Configuration Utility (ACU) (On-line/off-line)
- Option ROM Configuration for Arrays (ORCA)
- Selective Storage Present (SSP)
- Rom based set-up utility (RBSU)

Management/Health

- HP Systems Insight Manager
- SmartStart
- Management Agents
- Redundant ROM
- Remote Flash ROM
- Integrated Lights-Out Support
- Remote Insight Lights-Out Edition
- Automatic Server Recovery (ASR)
- Active Update
- ROMPaq, support software and configuration utilities
- Survey Utility and diagnostics utilities
- Drive Parameter Tracking
- Dynamic Sector Repairing
- Hot Spare Boot
  NOTE: Upon the event of a failed processor or VRM in a multi-processing environment, the system will automatically reboot and use the remaining good processor(s).
- Pre-Failure Notification (covers processors, SCSI hard drives and memory)

Factory Express Portfolio for Servers and Storage

HP Factory Express offers configuration, customization, integration and deployment services for HP servers and storage products. Customers can choose how their factory solutions are built, tested, integrated, shipped and deployed.

Factory Express offers service packages for simple configuration, racking, installation, complex configuration and design services as well as individual factory services, such as image loading, asset tagging, and custom packaging. HP products supported through Factory Express include a wide array of servers and storage: HP Integrity, HP ProLiant, HP ProLiant Server Blades, HP BladeSystem, HP 9000 servers as well as the MSA1000, VA7xxx, EVA, XP, rackable tape libraries and configurable network switches.

For more information on Factory Express services for your specific server model please contact your sales representative or go to http://www.hp.com/go/factory-express.

Standard Features

HP Enterprise Configurator	The HP eCo-Enterprise Configurator now provides factory default racking for our HP hardware portfolio. This approach is aligned with our strategic direction to meet the needs and expectations of our valued customers. If you require "custom" rack configuration, please contact HP's Customer Business Center or an Authorized Partner for assistance.
Rack Airflow Requirements	Rack 10000 series Cabinets The increasing power of new high-performance processor technology requires increased cooling efficiency for rack-mounted servers. The 10000 Series Racks provide enhanced airflow for maximum cooling, allowing these racks to be fully loaded with servers using the latest processors. CAUTION: If a third-party rack is used, observe the following additional requirements to ensure adequate airflow and to prevent damage to the equipment: o Front and rear doors: If your 42U server rack includes closing front and rear doors, you must allow 830 square inches (5,350 sq cm) of hole evenly distributed from top to bottom to permit adequate airflow (equivalent to the required 64 percent open area for ventilation). o Side: The clearance between the installed rack component and the side panels of the rack must be a minimum of 2.75 inches (7 cm). CAUTION: Always use blanking panels to fill all remaining empty front panel U-spaces in the rack. This arrangement ensures proper airflow. Using a rack without blanking panels results in improper cooling that can lead to thermal damage. NOTE: For additional information, refer to the Setup and Installation Guide or the Documentation CD provided with the server, or to the server documentation located in the Support section at the following URL: www.hp.com/servers/packagedclusters.
Rack Kit (Servers)	Tool-Free support for racks with square mounting holes (including Compaq/HP 7000, 9000, 10000 and H9 series), with an adjustment range of 24" - 36". NOTE: The Modular Smart Array 500 tool-less rack rail included in the Packaged Cluster accommodates most round or square hole rack standard.
Service and Support	HP Care Pack services provide total care and support expertise with committed response designed to meet your IT and business needs. HP Care Pack services include coverage for the HP branded hardware options qualified for the server and purchased at the same time or afterward that are internal to the enclosure. This also includes the 22" and smaller external monitors and tower UPS options up to 3kVA. These items will be covered at the same service level and for the same coverage period as the server. Coverage of UPS Battery is not included, and standard warranty terms & conditions apply. For servers or storage systems installed within a rack, service also covers all HP qualified rack options installed within the same rack. To fully capitalizing on your HP ProLiant servers' capabilities requires a service partner who thoroughly understands your server technology and systems environment. HP Services, an industry leader in provision of multi vender support solutions, provides a range of support services designed to meet the varying needs of your business. Whether an SMB, or large global corporation, HP has a ProLiant server support offer to help you speedily deploy and maximize system uptime. Recommended Service - simplify ProLiant solution implementation, maintenance, and management.

Standard Features

- Support - 3 Year 4 Hour response 24x7 Same Business Day Coverage only
- Deployment Service - Installation and Start up only

Enhanced Service - optimize service level to increase IT performance and availability.

- Support - 3 Year Support Plus 24 only

Refer to the information on "Installation & Start-Up" for service on ProLiant server and Microsoft or Linux O/S per the Customer Description and/or Data Sheet; to be delivered on a scheduled basis 8am-5pm, M-F, excluding HP holidays.

NOTE: For a complete listing of service offerings and information visit:
http://www.hp.com/services/proliantservices
http://www.hp.com/go/proliant/carepack

Storage	Modular Smart Array 500 G2 (Qty 1) NOTE: Complete information on the storage can be found in the following QuickSpecs: http://h18004.www1.hp.com/products/servers/proliantstorage/sharedstorage/sacluster/index.html	
MSA500 G2 Storage Controller	Modular Smart Array 500 G2 Controller, redundant controller capable	
MSA500 G2 Storage	Drive bays	14 Hot pluggable
	Hard Drives	None
	Maximum Internal Storage	4.20TB (14 x 300GB Ultra320 HDD)
	SCSI Hard Drive	Pre-failure warranty
MSA500 G2 Storage Standard Contents	4U Modular Smart Array 500 G2 Modular Smart Array 500 G2 controller with 256 MB cache 2-port SCSI I/O module Redundant hot pluggable power supply/fans Modular Smart Array 500 rack mounting kit Power cables, 2 VHDCI SCSI cables (2) 6' each Ethernet Crossover cable for clustering	
MSA500 G2 Storage Controller	Modular Smart Array 500 G2 Controller U320 SCSI technology, redundant controller capable 4 SCSI Channels (2 Host; 2 INTL)	
MSA500 G2 Host Bus Adapters	Integrated Ultra320 Smart Array 6i Plus Controller on the servers Smart Array 642 Controller (optional)	

Standard Features

MSA500 G2 Cache Memory	256 MB Read/Write Cache ECC protection, battery backed, removable	Up to 512 MB Read/Write Cache (optional) NOTE: Optional storage memory allows the following configurations: 1 x 256 MB or 2 x 256 MB.
	NOTE: When redundant controllers are installed, the cache configurations in both controllers must be identical.	
MSA500 G2 Cache Batteries	Up to three days of redundant battery life, removed for easy replacement	
MSA500 G2 Upgradeable Firmware	2 MB flashable ROM	
MSA500 G2 Power Supply	600 Watt (Dual) Power Supply, CE Mark Compliant Fans integrated into each power supply, Redundant Functionality (Standard)	
MSA500 G2 Disk Drive and Enclosure Protocol Support	Ultra320, Ultra3 and Ultra 2 SCSI Universal drives	
DtS (DAS to SAN) Technology	The Smart Array architecture provides a quick and easy way to migrate from the Modular Smart Array 500 G2 to the Modular Smart Array 1000 (MSA1000) for additional scalability. In order to convert the Modular Smart Array 500 G2 to a SAN, simply remove the Modular Smart Array Controller(s) and replace them with StorageWorks MSA1000 Controller(s) and add FC I/O board or FC Switch (please refer to MSA1000 QuickSpecs for additional SAN requirements information). This is referred to as DtS technology (DAS-to-SAN technology). In addition to convertibility to the SAN, the Modular Smart Array 500 G2 allows the seamless migration of stored data in ProLiant servers protected by Smart Array PCI controllers to a Modular Smart Array 500 system. Data that is currently stored on Universal disk drives using HP Smart Array controllers, as well as data on an RA4100 can easily be migrated to the Modular Smart Array 500 G2. Simply remove the drives from the older systems and insert them into the Modular Smart Array 500 G2. Existing data and configuration will remain intact. In addition, the RAID set and data will be preserved allowing migration to be completed in minutes, not hours.	
MSA500 G2 Form Factor	Rack 4U	
MSA500 G2 Connector Type	Ultra320 SCSI	
MSA500 G2 Ports	2 VHDCI; Ultra320 SCSI	

Standard Features

MSA500 G2 Bandwidth	320 MB/s
MSA500 G2 Protocols Supported	Ultra320 SCSI (320 MB/s per channel)
MSA500 G2 User Interface	Controller display with Status Indicators (2) and Push Buttons (4) Status indicators on front of controller (16)
MSA500 G2 SCSI Ports	2 external VHDCI connectors standard. Optional 4-port Shared Storage Module with 4 VHDCI connectors and multi-path software included.
MSA500 G2 Logical Drives	Up to 32 logical drives
MSA500 G2 RAID Support	Raid ADG (Advanced Data Guarding) Raid 5 (Distributed Data Guarding) Raid 1+0 (Striping and Mirroring) Raid 1 (Mirroring) Raid 0 (Striping)

Models

DL380 G4 Packaged Cluster 3.6 GHz with MSA500 G2 (base model) 381367-xx1	Processor(s)	(1) Intel® Xeon® Processor 3.6 GHz standard (up to 2 supported)
	Cache Memory	2MB level 2 ECC cache
	Memory	1 GB (Standard per server) to 12 GB (Maximum) of 2 way interleaved capable PC3200 DDR SDRAM running at 400MHz, with Advanced ECC capabilities
	Network Controller	Embedded NC7782 PCI-X Gigabit Server Adapter
	Storage Controller	Ultra320 Smart Array 6i Controller (integrated on system board)
	Hard Drives	None ship standard
	Internal Storage	1.80TB max (with optional hard drives)
	Optical Drive	24x IDE CD-ROM Drive
	Modular Smart Array 500 G2	1 MSA500 G2 with 14 drive bays. Includes one Smart Array Storage Controller, redundant optional
	Form Factor	8U configuration fixture

DL380 G4 Packaged Cluster 3.6 GHz with MSA500 G2 - Racked model 381369-xx1 NOTE: Only available in NA and EMEA.	Processor(s)	(1) Intel® Xeon® Processor 3.6 GHz standard (up to 2 supported)
	Cache Memory	2MB level 2 ECC cache
	Memory	1 GB (Standard per server) to 12 GB (Maximum) of 2 way interleaved capable PC3200 DDR SDRAM running at 400MHz, with Advanced ECC capabilities
	Network Controller	Embedded NC7782 PCI-X Gigabit Server Adapter
	Storage Controller	Ultra320 Smart Array 6i Controller (integrated on system board)
	Hard Drives	None ship standard
	Diskette Drive	None ship standard
	Optical Drive	24x IDE CD-ROM Drive (MultiBay)
	Internal Storage	1.80TB max (with optional hard drives)
	Modular Smart Array 500	1 MSA500 G2 with 14 drive bays. Includes one Smart Array Storage Controller, redundant optional
	Form Factor	Rack (14U)

Country Code Key	XX=00	US
	XX=29	Japan
	XX=37	APD
	XX=42	EURO

IMPORTANT: The cluster models listed above cannot be customized. If you require additional customization to the cluster, then you must have HP use the Internal Configure-To-Order configurator process to receive a complete factory integrated cluster with options delivered in a single package. The Purchase Order must list each part number individually. This should be communicated in advance with the HP sales or client services at 1-800-888-0292. See steps below for more information.

Step 1: Choose Factory Integration part number (only for 14U racked clusters)

Factory Integration for 14U clusters 342467-888

IMPORTANT: If you are choosing to have the cluster pre-installed into the 14U rack, then you must choose the Factory Integration part number. This part number should be the first line item on the order.

IMPORTANT: The Factory Integration part number is NOT required for the 8U configuration fixture cluster and does NOT need to be listed on the order.

Step 2: Choose an 8U Configuration Fixture or Rack (14U) Shock Pallet

HP 8U Configuration Fixture for SCSI cluster 378026-B21

HP Rack 10614 (14U) - Shock Pallet 292302-B22

NOTE: This ensures the cluster is delivered in a single package with all necessary documentation and cables.

Step 3: Choose two (2) DL380 servers

IMPORTANT: You must choose two (2) identical servers.

HP ProLiant DL380G4 Rack Chassis (North America) 371293-405

HP ProLiant DL380G4 Rack Chassis (Worldwide) 371293-B21

NOTE: Not all server options are supported in the HP ProLiant DL380 Packaged Cluster. For additional information on supported options, please contact Client Services at 1-800-888-0292.

Please refer to the HP ProLiant DL380 G4 server QuickSpecs for information on CTO server models and options: http://h18004.www1.hp.com/products/servers/proliantdl380/index.html

Step 4: Choose one (1) Modular Smart Array 500 G2 System

HP Modular Smart Array 500 G2 (North America) 335880-B21

HP Modular Smart Array 500 G2 (EMEA) 335880-605

Packaged Content includes:

- Modular Smart Array 500 G2 Chassis
- Modular Smart Array 500 G2 Controller with 256MB cache
- 2-port Ultra320 SCSI I/O Module
- Redundant Hot Pluggable Power Supply/Blower assemblies
- Two Host Bus Adapters - Smart Array 642 adapters
- Modular Smart Array 500 G2 Rack Mounting Kit
- Modular Smart Array 500 G2 Support Software or SmartStart CD
- Power cables (Qty 2)

Step 5: Services

NOTE: When ordering a DL380 Packaged Cluster server through the CTO process, individual DL380 and MSA500 Care Pack services should be quoted for each DL380 server and MSA500 storage product part number. The DL380 Packaged Cluster services are not applicable. The DL380 Packaged Cluster Care Pack services are only applicable for the BTO DL380 Packaged Cluster part numbers: 381369-xx1 or 381367-xx1.

MSA500 G2 Service and Support

HP Care Pack

Fixed Price Care Pack

3 Yr 4h 13x5	U6455E
3 Yr 4h 24x7	U6456E
3 Yr 6h CTR	U6457E
1 Yr 4h 13x5	U8148E
1 Yr 4h 7x24	U8149E
1 Yr 6h CTR	U8150E
Hardware Installation	U6458E

DL380 G4 Service and Support

Hardware Services On-site Service

4-Hour On-site Service, 5-Day x 13-Hour Coverage, 3 Years, Electronic	U4544E
4-Hour On-site Service, 7-Day x 24-Hour Coverage, 3 Years, Electronic	U4545E

Hardware Services 6-Hour Call to Repair On-site Service

6-Hour Call to Repair, On-site Service, 7-Day x 24-Hour Coverage, 3 Years, Electronic	U4546E

Installation & Start-up Services

Hardware Installation, Electronic	U4554E
Installation & Start-Up of a ProLiant server and Microsoft or Linux O/S per the Customer Description and/or Data Sheet. To be delivered on a scheduled basis 8am-5pm, M-F, excl. HP holidays, Electronic	U4555E

NOTE: For more information, customer/resellers can contact: http://www.hp.com/services/carepack.

Options (DL380 G4 Packaged Cluster with MSA500 G2)

NOTE: Some options may not be factory configurable. Please contact your local sales representative for additional information.

Processor	Intel® Xeon® X3.6 GHz-2MB/800MHz Processor Option Kit	378751-B21
	Intel® Xeon® X3.4 GHz-1MB/800MHz Processor Option Kit	311583-B21
Memory (SDRAM DIMMs)	1 GB of Advanced PC2 PC3200 DDR2 SDRAM DIMM Memory Kit (2 x 512 MB)	343055-B21
	2 GB of Advanced PC2 PC3200 DDR2 SDRAM DIMM Memory Kit (2 x 1024 MB)	343056-B21
	4 GB of Single-Ranked PC2 PC3200 DDR2 SDRAM DIMM Memory Kit (2 x 2048 MB)	343057-B21
	4 GB of 2-Rank Advanced ECC PC3200 DDR2-400 SDRAM DIMM Memory Kit (2 x 2048 MB)	375004-B21
Storage Rail Kit (Round Holes)	Round hole rack cabinet rail kit NOTE: Supports for racks with round mounting holes (including HP rack systems/E and HP systems), with an adjustment range of 24"- 36". NOTE: The standard storage rails already support most square and round hole racks.	293052-B21
Riser Cards	PCI-X Hot Plug Riser Cage Option Kit	354676-B21
	PCI-Express Riser Cage Option Kit NOTE: For information about PCI Express visit: http://www.hp.com/servers/pci-express.	354675-B21
Server Management Stand Alone Software Product - ProLiant Essentials	NOTE: Electronic licensing options are available for select ProLiant Essentials software products. Please see the appropriate ProLiant Essentials QuickSpecs for additional information.	
	Deploy	
	ProLiant Essentials Rapid Deployment Pack	
	ProLiant Essentials Rapid Deployment Pack No Media 1-Server License including 1 year of 24x7 Technical Support and Updates NOTE: This license allows 1 server to be deployed and managed via RDP. Customer will receive a printed license entitlement certificate via physical shipment. The license entitlement certificate must be redeemed online or via fax in order to obtain the license activation key(s). Includes one year of 24 x 7 HP Software Technical Support Service NOTE: For additional License Kits, please see the QuickSpecs at: http://h18000.www1.hp.com/products/quickspecs/11053_div/11053_div.html NOTE: For additional License Kits, please see the QuickSpecs at: http://h18000.www1.hp.com/products/quickspecs/12855_div/12855_div.html	452151-B21
	Control	
	Integrated Lights-Out Select Pack	
	ProLiant Essentials Integrated Lights-Out Select Pack, No Media, 1-Server License NOTE: For additional License Kits, please see the QuickSpecs at: http://h18000.www1.hp.com/products/quickspecs/12362_div/12362_div.html	452158-B21
	Integrated Lights-Out Advanced Pack	

Options (DL380 G4 Packaged Cluster with MSA500 G2)

Integrated Lights-Out Advanced Pack, No Media ,1 Server License NOTE: For additional License Kits, please see the QuickSpecs at: http://h18000.www1.hp.com/products/quickspecs/10861_div/10861_div.html	452141-B21
Optimize	
ProLiant Essentials Virtual Machine Management Pack	
ProLiant Essentials Virtual Machine Management Pack, No Media, 1-Server License, including 1 year of 24x7 Technical Support and Updates NOTE: Customer will receive a printed license entitlement certificate via physical shipment. The license entitlement certificate must be redeemed online or via fax in order to obtain the license activation key(s). Includes one year of 24 x 7 HP Software Technical Support and Update Service. NOTE: For additional License Kits, please see the QuickSpecs at: http://h18000.www1.hp.com/products/quickspecs/12328_div/12328_div.html NOTE: Flexible and volume quantity license kits are available for ProLiant Essentials Value Packs. Refer to: http://www.hp.com/servers/proliantessentials or the various ProLiant Essentials QuickSpecs for more information.	452153-B21

Options

Communications	HP NC360T PCI Express Dual Port Gigabit Server Adapter	412648-B21
	HP NC373F PCI Express Multifunction Gigabit Server Adapter	394793-B21
	HP NC373T PCI Express Multifunction Gigabit Server Adapter	394791-B21
	HP NC380T PCI Express Dual Port Multifunction Gigabit Server Adapter	394795-B21
	HP NC7170 PCI-X Dual Port 1000T Gigabit Server Adapter	313881-B21
	HP NC7771 PCI-X 1000T Gigabit Server Adapter	290563-B21
Redundant Options	Hot Plug AC Redundant Power Supply Module (NEMA cord) (NA)	355892-001
	Hot Plug AC Redundant Power Supply Module (IEC cord) (WW)	355892-B21
Optical Drives	Slimline DVD-ROM Drive (8X/24X) Option Kit (Servers)	264007-B21
	Slimline CD-RW/DVD-ROM Combo Drive Option Kit	331903-B21
	HP DVD±R/RW 8X Slim	383975-B21
Diskette Drives	Floppy Drive Option Kit	364507-B21
Hard Drives	**Ultra320 SCSI – Universal Hot Plug**	
	HP 300GB U320 10K Universal HDD	350964-B22
	HP 146GB U320 10K Universal HDD	286716-B22
	HP 72GB U320 10K Universal HDD	286714-B22
	HP 300GB U320 15K Universal HDD	411089-B22
	HP 146GB U320 15K Universal HDD	347708-B22
	HP 72GB U320 15K Universal HDD	286778-B22
	HP 36GB U320 15K Universal HDD	286776-B22
	NOTE: All U320 Universal Hard Drives are backward compatible to U2 or U3 speeds. U320 drives require an optional U320 Smart Array Controller or U320 SCSI HBA to support U320 transfer rates.	
	NOTE: Please see the Hard Drive QuickSpecs for Technical Specifications such as capacity, height, width, interface, transfer rate, seek time, physical configuration, and operating temperature: http://h18000.www1.hp.com/products/quickspecs/11531_div/11531_div.html (Worldwide)	
SCSI Configuration Kit	SCSI Configuration Kit NOTE: Kit Includes duplex drive backplane terminator and 2 long SCSI cables.	364471-B21
Redundant Storage Controller	Modular Smart Array 500 G2 Redundant Controller Option Kit	335881-B21

Options

Modular Smart Array 500 G2 High Availability Kit	Modular Smart Array 500 G2 High Availability Kit NOTE: Includes MSA500 G2 controller, MSA500 G2 4-port IO Module, Smart Array Multipath Software, two Smart Array 642 Adapters and two 6 foot SCSI Cables.	360229-B21
4-Port I/O module	MSA500 G2 4-Port I/O Module with Smart Array Multipath Software and two 6 foot SCSI Cables	335882-B21
Storage Controllers	SCSI Controllers	
	128MB Battery-Backed Write Cache with Battery Housing NOTE: Upgrade for Smart Array 6i controller.	346914-B21
	Smart Array 642 Controller	291967-B21
	128MB Battery-Backed Cache Enabler NOTE: This 128MB BBWC supports the Smart Array 642 Controller.	351580-B21
	256MB Battery Backed Cache Module	254786-B21
	NOTE: Please see the following QuickSpecs for Technical Specifications and additional information: http://h18000.www1.hp.com/products/quickspecs/11063_div/11063_div.html (Smart Array 6i Controller) http://h18000.www1.hp.com/products/quickspecs/12069_div/12069_div.html (Smart Array 642 Controller)	
Management Options	Remote Insight Lights-Out Edition II (NA, LA)	227251-001
	Remote Insight Lights-Out Edition II (EMEA)	227251-021
	Remote Insight Lights-Out Edition II (ROW)	227251-371
Tape Drives	NOTE: For the complete listing of Tape Drive offerings, please see: http://www.hp.com/products1/storage/compatibility/tapebackup/ISS/index.html For recommended tape drive offerings for this ProLiant server see the following:	
	SCSI Tape Drives	
	NOTE: For the DL380 G4 Packaged Cluster, HP recommends purchasing the HP 64-Bit/133-MHz Single Channel Ultra320 SCSI HBA G2 (374654-B21) for a dedicated SCSI HBA for tape.	
	HP StorageWorks LTO-2 Ultrium 448 SCSI Internal Tape Drive (Carbonite)	DW016A
	HP StorageWorks LTO-3 Ultrium 920 SCSI Internal Tape Drive	EH841A
	HP StorageWorks 3U SCSI Rack-Mount with 1 LTO-4 Ultrium 1840 Tape Drive	EH926A
	NOTE: Please see the HP StorageWorks Ultrium Tape Drive QuickSpecs for additional options such as controllers, media, and other related items: http://h18006.www1.hp.com/products/quickspecs/11739_div/11739_div.html (Worldwide) http://h18006.www1.hp.com/products/quickspecs/12128_div/12128_div.html (Worldwide) For an up-to-date listing of the latest O/S and software support details for HP Ultrium tape drives, please visit: http://www.hp.com/go/connect.	

Options

	Rack-Mount Tape Drive Enclosures	
	HP StorageWorks 1U SCSI Rack-Mount kit	A7445B
	NOTE: The 1U Rack-Mount Kit can support up to (2) half-height tape drives and is compatible with multiple Single-Ended and LVD SCSI tape drives including the DAT 40, DAT 72, DAT 160, DLT VS160, LTO-1 Ultrium 232, LTO-2 Ultrium 448 and LTO-3 Ultrium 920 tape drives.	
	HP StorageWorks 3U SCSI Rack-mount Kit	274338-B22
	NOTE: The 3U SCSI Rack-mount Kit can support up to (2) full-height or (4) half-height tape drives and is compatible with multiple LVD SCSI tape drives including DAT 40, DAT 72, DAT 160, DLT VS160, SDLT 600, LTO-1 Ultrium 232, LTO-2 Ultrium 460, LTO-2 Ultrium 448, LTO-3 Ultrium 920, LTO-3 Ultrium 960 and LTO-4 Ultrium 1840 tape drives.	
	NOTE: Please see the Rack-Mount Tape Drive Kits QuickSpecs for additional information regarding these kits: http://h18000.www1.hp.com/products/quickspecs/10854_div/10854_div.html (Worldwide)	
Tape Autoloaders	**HP StorageWorks DAT Autoloader**	
	HP StorageWorks DAT 72x10 tape autoloader	AE313B
	HP StorageWorks 1/8 Tape Autoloader	
	HP StorageWorks 1/8 LTO-3 Ultrium 920 G2 Tape Autoloader	AH165A
	HP StorageWorks 1/8 LTO-2 Ultrium 448 G2 Tape Autoloader	AH164A
	HP StorageWorks 1/8 LTO-1 Ultrium 232 G2 Tape Autoloader	AH163A
	HP StorageWorks 1/8 G2 Tape Autoloader Rack Kit	AH166A
	NOTE: Required to install the 1/8 G2 Autoloaders in a standard 19-inch rack; includes rails and rackmount instructions.	
	NOTE: Please reference the Tape Autoloader QuickSpecs at: http://www.hp.com/go/automation for additional information needed to create a complete solution.	
Tape Libraries	**HP StorageWorks MSL2024 Tape Library**	
	HP StorageWorks MSL2024 1 LTO-4 Ultrium 1840 SCSI Drive Library	AJ033A
	HP StorageWorks MSL2024 1 LTO-4 Ultrium 1840 4GB FC Library	AJ034A
	HP StorageWorks MSL2024 1 LTO-3 Ultrium 960 SCSI Drive Library	AG115A
	HP StorageWorks MSL2024 1 LTO-3 Ultrium 960 4GB FC Library	AG326B
	HP StorageWorks MSL2024 1 LTO-3 Ultrium 920 SCSI Drive Library	AH169A
	HP StorageWorks MSL2024 1 LTO-2 Ultrium 448 SCSI Drive Library	AG116A
	HP StorageWorks MSL4048 Tape Library	
	HP StorageWorks MSL4048 1 LTO-4 Ultrium 1840 SCSI Drive Library	AJ035A
	HP StorageWorks MSL4048 1 LTO-4 Ultrium 1840 4GB FC Library	AJ036A
	HP StorageWorks MSL4048 1 LTO-3 Ultrium 960 SCSI Drive Library	AG322A
	HP StorageWorks MSL4048 1 LTO-3 Ultrium 960 4GB FC Library	AG324B
	HP StorageWorks MSL4048 1 LTO-3 Ultrium 920 SCSI Drive Library	AH171A
	HP StorageWorks MSL4048 1 LTO-2 Ultrium 448 SCSI Drive Library	AG320A

Options

	HP StorageWorks MSL8096 Tape Library	
	HP StorageWorks MSL8096 2 LTO-4 Ultrium 1840 SCSI Drive Library	AJ039A
	HP StorageWorks MSL8096 2 LTO-4 Ultrium 1840 4GB FC Library	AJ040A
	HP StorageWorks MSL8096 2 LTO-3 Ultrium 960 4GB FC Library	AH218A
	HP StorageWorks MSL8096 2 LTO-3 Ultrium 960 SCSI Drive Library	AH219A
	HP StorageWorks MSL6000 Tape Library	
	LTO-4 Ultrium 1840 technology	
	HP StorageWorks MSL6030 1 LTO-4 Ultrium 1840 SCSI Drive Library	AJ029A
	HP StorageWorks MSL6030 1 LTO-4 Ultrium 1840 4GB FC Library	AJ030A
	HP StorageWorks MSL6060 2 LTO-4 Ultrium 1840 SCSI Drive Library	AJ031A
	HP StorageWorks MSL6060 2 LTO-4 Ultrium 1840 4GB FC Library	AJ032A
	Ultrium 960 technology	
	HP StorageWorks MSL6030 1 LTO-3 Ultrium 960 SCSI Drive Library	AD606B
	HP StorageWorks MSL6030 1 LTO-3 Ultrium 960 4GB FC Library	AD608B
	HP StorageWorks MSL6030 2 LTO-3 Ultrium 960 SCSI Drive Library	AD607B
	HP StorageWorks MSL6030 2 LTO-3 Ultrium 960 4GB FC Library	AD609B
	NOTE: Please reference the MSL2024, MSL4048 and MSL6000 Tape Library QuickSpecs at: http://www.hp.com/go/automation for additional information needed to create a complete solution; reference current compatibility information at: http://www.hp.com/go/ebs.	
Cluster Options	HP Serviceguard for Linux ProLiant Cluster, A.11.18 (2 license version - Red Hat EL 4&5, SUSE SLES10)	305199-B27
	HP Serviceguard for Linux, A.11.18 (single license version - Red Hat EL 4&5, SUSE SLES10)	307754-B27
	HP Serviceguard for Linux and Red Hat Global File System - 1 year subscription	T2798AA#001
	HP Serviceguard for Linux and Red Hat Global File System - 3 years subscription	T2798AA#003
	NOTE: For additional information regarding the HP Serviceguard for Linux License, please see the following QuickSpecs at: http://h18000.www1.hp.com/products/quickspecs/11518_div/11518_div.html (Worldwide)	
HP Monitored Power Distribution Unit (PDU)	**HP Monitored Power Distribution Unit: Full Rack Version**	
	HP 17.3 kVA S2324 Monitored PDU- dual input, 3U, 24A (NA/JPN)	AF503A
	HP 8.3 kVA S1324 Monitored PDU- single input, 3U, 24A (NA/JPN)	AF504A
	HP 16.6 kVA S2140 Monitored PDU- dual input, 1U, 40A (NA/JPN)	AF505A
	HP 8.6 S1140 Monitored PDU- single input, 1U, 40A (NA/JPN)	AF506A
	HP 22.1 kVA S2316 Monitored PDU- dual input, 3U, 16A (INTL)	AF507A
	HP 11 kVA S1316 Monitored PDU- single input, 3U, 16A (INTL)	AF508A
	HP 14.7 kVA S2132 Monitored PDU- dual input, 1U, 32A (INTL)	AF509A
	HP 7.3kVA S1132 Monitored PDU- single input, 1U, 32A (INTL)	AF510A

Options

Uninterruptible Power Systems – Rack Mountable	HP, R1.5kVA UPS, 1U, NA	AF419A
	HP, R1.5kVA UPS, 1U, INTL	AF418A
	HP, R1.5kVA UPS, 1U, JPN/TW	AF421A
	HP R3000 VA UPS, 2U, DTC, INTL	AF414A
	HP R3000 VA UPS, 2U, L5-30, NA	AF422A
	HP R3000 VA UPS, 2U, L6-20, NA	AF423A
	HP R3000 VA UPS, 2U, L6-20, JPN	AF424A
	HP R3000 VA UPS, 2U, L5-30, JPN	AF425A
	HP R5500 VA UPS, INTL	AF416A
	HP R5500 VA UPS, NA/JPN	AF426A
Modular PDUs 1U/0U (Up to 32 outlets) NOTE: 1U/0U mounting brackets shipped with the unit (optimized for 10000 and 9000 series racks).	3.6kVA Model - mPDU, 16A, High (WW)	252663-B24
	2.8kVA Model - mPDU, 24A, Low (NA/JPN)	252663-D71
	4.9kVA Model - mPDU, 24A, High (NA/JPN)	252663-D72
	7.3kVA Model - mPDU, 32A, High (INT'L)	252663-B31
	8.3kVA Model - mPDU, 40A, High (WW)	252663-B21
	8.3kVA Model - mPDU, 40A, High (power cord attached) (NA/JPN)	252663-D73
	9.2kVA Model - mPDU, 40A, High (power cord attached) (INTL)	252663-B32
	8.3kVA Model - mPDU 40A, High (core only) (NA/JPN)	252663-D75
	9.2kVA Model - mPDU 40 A, High (core only) (Int'l)	252663-B34
	8.3kVA Model - mPDU 32A, High (core only) (Int'l)	252663-B33
	4.9kVA Model - mPDU 24A, High (core only) (NA/JPN)	252663-D74
	NOTE: Please see the following Modular Power Distribution Unit (Zero-U/1U Modular PDUs) QuickSpecs for additional options including shorter jumper cables and country specific power cords: http://h18000.www1.hp.com/products/quickspecs/11041_div/11041_div.html (Worldwide)	

HP Racks - for standard cluster with 8U configuration fixture (non-rack model)

HP Rack 5000 Series (Graphite Metallic)	HP 5642 Rack-Unassembled	358254-B21
	NOTE: Please see the HP Rack 5642 QuickSpecs for additional part numbers and Technical Specifications such as height, width, depth, weight, and color: http://h18000.www1.hp.com/products/quickspecs/12074_div/12074_div.html (Worldwide)	
	NOTE: For additional information regarding Rack Cabinets, please see the following URL: http://www.hp.com/go/rackandpower.	

Options

HP Rack 10000 G2 Series (Carbon/Graphite Metallic)	10642 G2 (42U) Rack Cabinet - Pallet	AF001A
	10642 G2 (42U) Rack Cabinet - Shock Pallet	AF002A
	10642 G2 (42U) Rack Cabinet - Crated	AF003A
	10642 G2 (42U) Rack Cabinet, with Extension - Shock Pallet	AF004A
	10636 G2 (36U) Rack Cabinet - Pallet	AF011A
	10636 G2 (36U) Rack Cabinet - Shock Pallet	AF012A
	10636 G2 (36U) Rack Cabinet - Crated	AF013A
	10636 G2 (36U) Rack Cabinet , with Extension - Shock Pallet	AF014A
	10622 G2 (22U) Rack Cabinet - Pallet	AF021A
	10622 G2 (22U) Rack Cabinet - Shock Pallet	AF022A
	10842 G2 (42U) 800mm Wide Rack Cabinet - Pallet	AF041A
	10842 G2 (42U) 800mm Wide Rack Cabinet - Shock Pallet	AF042A
	10647 G2 (47U) Rack Cabinet - Pallet	AF031A
	NOTE: It is mandatory to use a shock pallet when shipping racks with equipment installed.	
	NOTE: Please see the Rack 10000 G2 QuickSpecs for Technical Specifications such as height, width, depth, weight, and color: http://h18000.www1.hp.com/products/quickspecs/12402_div/12402_div.html (Worldwide)	
	NOTE: For additional information regarding Rack Cabinets, please see the following URL: http://www.hp.com/go/rackandpower.	
HP Rack 10000 Series (Graphite Metallic)	HP Rack 10842 (42U, 800mm wide) - Pallet	257415-B21
	NOTE: xxxxxx-B21 (pallet) used to ship empty racks shipped on a truck. -B22 (shock pallet) used to ship racks with equipment installed (by custom systems, VARs and Channels). xxxxxx-B23 (crated) used for air shipments of empty racks.	
	NOTE: It is mandatory to use a shock pallet in order to ship racks with equipment installed. Not all equipment is qualified to be shipped in the Rack 10000 series	
	NOTE: Please see the Rack 10000 QuickSpecs for Technical Specifications such as height, width, depth, weight, and color: http://h18000.www1.hp.com/products/quickspecs/10995_div/10995_div.html (Worldwide)	
	NOTE: For additional information regarding Rack Cabinets, please see the following URL: http://www.hp.com/go/rackandpower.	

Options

Keyboards and Monitors	TFT7210R Rack Mounted 17" Monitor	348373-B21
	TFT7600 Rackmount Keyboard Monitor US	AG052A
	TFT7600 Rackmount Keyboard Monitor UK	AG053A
	TFT7600 Rackmount Keyboard Monitor GR	AG054A
	TFT7600 Rackmount Keyboard Monitor FR	AG055A
	TFT7600 Rackmount Keyboard Monitor IT	AG056A
	TFT7600 Rackmount Keyboard Monitor SP	AG057A
	TFT7600 Rackmount Keyboard Monitor DEN	AG058A
	TFT7600 Rackmount Keyboard Monitor NOR	AG059A
	TFT7600 Rackmount Keyboard Monitor SE/FI	AG060A
	TFT7600 Rackmount Keyboard Monitor SWI	AG061A
	TFT7600 Rackmount Keyboard Monitor PORT	AG062A
	TFT7600 Rackmount Keyboard Monitor BEL	AG063A
	TFT7600 Rackmount Keyboard Monitor JPN2	AG064A
	TFT7600 Rackmount Keyboard Monitor RUS	AG065A
	TFT7600 Rackmount Keyboard Monitor INTL	AG066A
	1U Rackmount Keyboard with USB, US	AG072A
	1U Rackmount Keyboard with USB, UK	AG073A
	1U Rackmount Keyboard with USB, GR	AG074A
	1U Rackmount Keyboard with USB, FR	AG075A
	1U Rackmount Keyboard with USB, ITL	AG076A
	1U Rackmount Keyboard with USB, SP	AG077A
	1U Rackmount Keyboard with USB, DEN	AG078A
	1U Rackmount Keyboard with USB, NOR	AG079A
	1U Rackmount Keyboard with USB, SE/FI	AG080A
	1U Rackmount Keyboard with USB, SWI	AG081A
	1U Rackmount Keyboard with USB, PORT	AG082A
	1U Rackmount Keyboard with USB, BEL	AG083A
	1U Rackmount Keyboard with USB, JPN2	AG084A
	1U Rackmount Keyboard with USB, RUS	AG085A
	1U Rackmount Keyboard with USB, INTL	AG086A

NOTE: For additional information regarding Rack Cabinets, please see the following URL: http://www.hp.com/go/rackandpower.

Options

HP KVM Switch Options	2x1x16 IP Console Switch with Virtual Media	AF601A
	4x1x16 IP Console Switch with Virtual Media	AF602A
	2x16 Server Console Switch with Virtual Media	AF600A
	PS/2 Virtual Media Interface Adapter, 1 pack NOTE: Requires PS/2 and one USB port on server.	AF604A
	Server Console Switch (KVM), 0 x 1 x 8 port	336044-B21
	Server Console Switch (KVM), 0 x 2 x 16 port	336045-B21
	PS/2 Interface Adapter, 1 pack	262588-B21
	PS/2 Interface Adapter, 8 pack	262587-B21
	USB Interface Adapter, 1 pack	336047-B21
	Serial Interface adapter - 1 Pack with power supply	373035-B21
	NOTE: Cat5e cables are required to connect Interface Adapters to Console Switches. Cat5e cables can be found at the following URL: http://www.hp.com/go/kvm.	
	HP 1x 4 Console Switch	AF611A
	PS2 Server Console Cable, 6 ft, 2 pack	AF612A
	USB Server Console Cable, 6 ft, 2 pack	AF613A
	NOTE: For additional information regarding KVM switches, Serial Console servers, rack mount monitors, keyboards and all related options please see the following URL: http://www.hp.com/go/kvm.	
HP Serial Console Server Options	HP 16 Port Serial Console Server (worldwide)	AF101A
	HP 48 Port Serial Console Server (worldwide)	AF102A
	Serial Adapter, RJ45-DB9 DCE Female, 1 Pack	AF103A
	Serial Adapter, RJ45-DB9 DCE Female, 8 Pack	AF110A
	NOTE: Cat5e cables are required to connect Serial Adapters to Serial Console Servers. Additional Serial Adapters and Cat5e cables can be found at the following URL: http://www.hp.com/go/kvm.	
	NOTE: For additional information regarding KVM switches, Serial Console servers, rack mount monitors, keyboards and all related options please see the following URL: http://www.hp.com/go/kvm.	
Rack Options for Third Party Cabinet Racks	Round hole rack cabinet rail kit NOTE: Support for racks with round mounting holes (include HP Rack System /E and HP Systems) with an adjustment range of 24"- 36".	293052-B21

Options

Service and Support Offerings (HP Care Pack Services)	NOTE: The DL380 Packaged Cluster Care Pack services cover the two DL380 servers and the external storage component.	
	Hardware Services On-site Service	
	4-Hour On-site Service, 13-Hour x 5-Day Coverage, 3 Years, Electronic	U4560E
	4-Hour On-site Service, 24-Hour x 7-Day Coverage, 3 Years (U.S. Part Number), Electronic	U4561E
	24-Hour x 7-Day, 6-hour Call To Repair, 3 Years, Electronic	U4562E
	Installation & Start-up Services	
	Hardware Installation, Electronic	U4570E
	Installation & Start-Up of a ProLiant server and Microsoft or Linux O/S per the Customer Description and/or Data Sheet. To be delivered on a scheduled basis 8am-5pm, M-F, excl. HP holidays, Electronic	U2870E
	W2K AS Cluster Configuration HP Care Pack	
	Install & Configure MS Windows 2000 Advanced Sever Cluster software on a cluster, Electronic	U5701E
	Support Plus	
	Onsite HW support, 8am-9pm, M-F, 4hr response and Microsoft O/S SW Tech support offsite, onsite at HP's discretion, 8am-9pm, M-F 2hr response time excl. HP holidays, Electronic	U4571E
	Support Plus 24	
	Onsite HW support 24x7, 4hr response and Microsoft O/S SW Tech support offsite, onsite at HP's discretion, 24x7 2hr response time incl. HP holidays, Electronic	U4572E
	NOTE: For more information, customer/resellers can contact: http://www.hp.com/services/carepack.	

Memory

HP ProLiant DL380 G4 (per server)

Standard Memory

1 GB PC2 3200 MHz Registered DDR2 SDRAM DIMM installed (2 x 512 MB SDRAM)

Standard Memory Plus Optional Memory

Up to 5 GB memory is available with the optional installation of PC2 3200 MHz Registered DDR2 SDRAM DIMM memory kits.

Standard Memory Replaced with Optional Memory

Up to 12 GB memory is available with the removal of the standard 1 GB of memory and the optional installation of PC2 3200 MHz Registered DDR2 SDRAM DIMM memory option kit.

NOTE: Chart does not represent all possible configurations.

Memory		Slot					
		1	2	3	4	5	6
Standard	1 GB	512 MB	512 MB	Empty	Empty	Empty	Empty
Optional	5 GB	512 MB	512 MB	1 GB	1 GB	1 GB	1 GB
Maximum	12 GB	2 GB	2 GB	2 GB	2 GB	2 GB	2 GB

NOTE: Slots 3 and 6 can be configured as online spare memory through RBSU.

Following are memory options available from HP:

1 GB of Advanced PC2 PC3200 DDR2 SDRAM DIMM Memory Kit (2 x 512 MB)	343055-B21
2 GB of Advanced PC2 PC3200 DDR2 SDRAM DIMM Memory Kit (2 x 1024 MB)	343056-B21
4 GB of Advanced PC2 PC3200 DDR2 SDRAM DIMM Memory Kit (2 x 2048 MB)	343057-B21

Storage

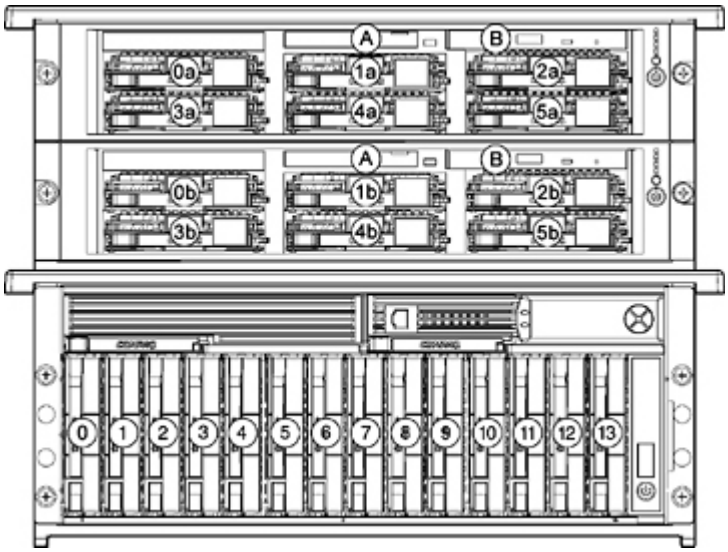

0a - 5a	Six Ultra320 SCSI hot plug hard drive bays
0b-5b	Six Ultra320 SCSI hot plug hard drive bays
0-13	Fourteen Ultra320 SCSI hot plug hard drive bays
A	Optional 1.44-MB Diskette Drive
B	24x IDE CD-ROM (Slimline) NOTE: Only a CD-ROM drive is qualified for use in the MultiBay slot.
0a & 0b	Convertible 1.6" drive bay - supports either (1) Hot Plug Drive or (1) 1.6" AIT or 20/40/100-GB DAT Hot Plug Tape Drive

Drive Support

	Quantity Supported	Position Supported	Controller
1.44-MB Diskette Drive	Up to 1	A	Integrated (Optional)
IDE CD-ROM Drive	Up to 1	B	Integrated IDE

Hard Drives

Ultra320 Hot Pluggable Drives

	Quantity Supported	Position Supported	Controller
300 GB U320 10K 146 GB U320 10K 72 GB U320 10K 300 GB U320 15K 146 GB U320 15K 72 GB U320 15K 36 GB U320 15K	Up to 26	0a-5a, 0b-5b, 0-13	Smart Array 6i Controller (integrated on system board) 64-Bit/133-MHz Single Channel Ultra320 SCSI HBA G2

NOTE: All U320 Universal Hard Drives are backward compatible to U2 or U3 speeds. U320 drives require an optional U320 Smart Array Controller or U320 SCSI HBA to support U320 transfer rates.

Maximum Storage Capacity – (Per HP ProLiant DL380 G4 Server)

Internal	1.80TB (6 x 300 GB Ultra320)

Maximum Shared Storage Capacity (Modular Smart Array 500 G2)

Internal	4.20TB (14 x 300GB Ultra320)

Storage

Tape Drives, Tape Autoloaders, Tape Libraries & D2D Backup

NOTE: For an up-to-date listing of the latest O/S Support details for each of the Tape Drives listed below, please see the following: http://h18000.www1.hp.com/products/quickspecs/division/10233.html (Worldwide)

NOTE: For an up-to-date listing of the latest O/S Support details for each of the Tape Autoloaders and Tape Libraries listed below, please see the following: http://h18000.www1.hp.com/products/quickspecs/division/10809.html (Worldwide)

NOTE: For complete listing of tape drive offerings see http://www.hp.com/products1/storage/compatibility/tapebackup/ISS/index.html

NOTE: SAS Tape Drives: Connecting hard drive cage and SAS tape to the same SAS Controller using split cable (supplied with tape drive) deactivates 1 of the hard drive bays. Actual hard drive bay deactivated depends on where split cable plugs into SAS drive connector. Example: 3x SAS cable connector plugged into SAS drive connector (5-8) on the back of the hard drive cage would mean drive bay 8 is deactivated.

	Position Supported	Controller	Controller Part Numbers
HP StorageWorks SCSI Tape Drives, External LTO-1 Ultrium 232 LTO-2 Ultrium 448 LTO-2 Ultrium 460 LTO-3 Ultrium 960 LTO-3 Ultrium 920 LTO-4 Ultrium 1840 DAT 40 DAT 72 DAT 160 DLT VS160 SDLT 600 1U Rack-Mount Kit 3U Rack-Mount Kit	External	HP SC11Xe Host Bus Adapter	412911-B21
HP StorageWorks SCSI Tape Automation, External DAT 72x10 Autoloader 1/8 G2 Autoloader MSL2024 MSL4048 MSL8096 MSL6000	External	HP SC11Xe Host Bus Adapter	412911-B21
		HP U320e SCSI Host Bus Adapter NOTE: Only valid for MSL tape libraries.	AH627A
HP StorageWorks Fibre Tape Automation, External MSL2024 MSL4048 MSL8096 MSL6000	External	Please consult the EBS connectivity matrix at: http://www.hp.com/go/ebs for detailed connectivity information.	N/A

Power Specifications

Part Number	194989-001
Spare Kit	19982-B21
Operational Input Voltage Range (V rms)	90 to 264
Frequency Range (Nominal) (Hz)	47 to 63 (50/60)

Nominal Input Voltage (Vrms)	100	115	208	220	230	240
Max Rated Output Wattage Rating	400	400	400	400	400	400
Nominal Input Current (A rms)	5.8	5.0	2.7	2.5	2.4	2.3
Max Rated Input Wattage Rating (Watts)	571	563	548	541	541	541
Max. Rated VA (Volt-Amp)	583	575	559	552	552	552
Efficiency (%)	70	71	73	74	74	74
Power Factor	0.98	0.98	0.98	0.98	0.98	0.98
Leakage Current (mA)	0.31	0.36	0.65	0.69	0.72	0.75
Maximum Inrush Current (A peak)	50	50	50	50	50	50
Maximum Inrush Current duration	20	20	20	20	20	20

NOTES:
* To review typical system power ratings use the Active Answers Power Calculator which is available via the online tool located at URL: http://h30099.www3.hp.com/configurator/calc/Power%20Calculator%20Catalog.xls.

To drill down to calculators:
- Click on: "ProLiant Servers"
- Click on the Server of interest. Example: DL380 G4 Packaged Cluster
- Click on: "Power Calculator" link. (You may need to scroll down to see it)

Power Cords (13 Cord Sets)	
Country	Power Cord Part Number
APD	139867-006
APD	100613-003
APD	100614-003
Australia	100611-007
Europe	100614-003
France	100614-003
Germany	100614-003
Japan	139867-006
PRC	139867-006
PRC	100613-003
PRC	100661-007
UK	100613-003
US	163719-002

System Unit - DL380 G4 Server	Dimensions (HxWxD)	3.38 x 17.5 x 25.75 in (8.59 x 44.45 x 65.40 cm)	
	Weight	Maximum	60 lb (27.22 kg)
		No drives	47.18 lb (20.41 kg)
	Input Requirements (per power supply)	Range Line Voltage	100-132 VAC to 200-240 VAC
		Rated Input Current	7.5A (100VAC) / 3.8A (200VAC)
		Rated Input Frequency	50 to 60 Hz
		Rated Input Power	735 W
	BTU Rating	2,508 BTU/HR	
	Power Specifications	To review typical system power ratings use the Active Answers Power Calculator which is available via the online tool located at URL: http://h30099.www3.hp.com/configurator/calc/Power%20Calculator%20Catalog.xls To drill down to calculators: - Click on: "ProLiant Servers" - Click on the Server of interest. Example: DL380 G4 Packaged Cluster - Click on: "Power Calculator" link. (You may need to scroll down to see it)	
	SCSI Connectors	One external VHDCI connector	
	Power Supply Output Power (per power supply)	Rated Steady-State Power	575W
		Maximum Peak Power	575W
	Temperature Range	Operating	50° to 95° F (10° to 35° C)
		Shipping	-22° to 122° F (-30° to 50° C)
	Relative Humidity (non-condensing)	Operating	10% to 90%
		Shipping	5% to 95%
	Maximum Wet Bulb Temperature	82.4° F (28° C)	
	Acoustic Noise	Idle (Fixed Disk Drives Spinning)	
		L WAd (BELS)	7.4
		L pAm (dBA)	58
		Operating (Random Seeks to Fixed Disks)	
		L WAd (BELS)	7.4
		L pAm (dBA)	58

Technical Specifications

Modular Smart Array 500 G2	Dimension	4.5 x 1.375 x 9.5 in (11.4 x 3.5 x 24.1 cm)	
	Weight	Maximum (Net)	50 lb (22.5 kg)
	Input Requirements (per power supply)	Rated Input Voltage	100 to 240 VAC
		Rated Input Frequency	50 to 60 Hz
		Rated Input Current	2.3 A at 120 VAC typical, 6A Maximum
		Input Power (Max)	549 W*
		Heat Dissipation (max)	1876 Btu/hr*
		*Input Power and Heat Dissipation specifications are maximum values and apply to worst-case conditions at full rated power supply load. The power/heat dissipation for your installation will vary depending on the equipment configuration.	
	Temperature Range	Operating	50° to 95° F (10° to 35° C)
		Shipping	-2° to 122° F (-0° to 50° C) NOTE: Rated 1°C per 1000 feet of elevation to 10000 ft.
	Relative Humidity (non-condensing)	Operating	10% to 90%
		Non-operating	Up to 95%
Packaged Cluster	Dimensions	16 x 21 x 29 in (17.5 x 48.3 x 52.1 cm)	
	Weight	Standard Configuration (No drives dual power supplies)	190 lb (86.18 kg)
Integrated Smart Array 6i Plus Controller	Data Compatible with all Smart Array Controllers	Yes	
	Instant Upgrades to other Smart Array Controllers	Yes	
	Consistent Software Manageability Tools	Yes	
	PCI-X Bus	64-bit up to 133 MHz (integrated on system board)	
	PCI-X Peak Data Transfer Rate	800 MB/s	
	SCSI Protocols Supported	Ultra320, Ultra3, Ultra2	
	SCSI Peak Data Transfer Rate	320 MB/s per channel NOTE: For ProLiant servers having TWO internal drive bays on separate SCSI ports: SCSI Peak Data Transfer Rate is 320 MB/s; 160 MB/s per channel and Channels is 2.	
	Channels	2 NOTE: For ProLiant servers having two internal drive bays on separate SCSI ports: SCSI Peak Data Transfer Rate is 320 MB/s; 160 MB/s per channel and Channels is 2.	
	SCSI Ports (external/internal)	0/2 NOTE: For ProLiant servers having two internal drive bays on separate SCSI ports: SCSI Peak Data Transfer Rate is 320 MB/s; 160 MB/s per channel and Channels is 2.	

	Drives Supported (maximum)	Maximum = total number of drives NOTE: Maximum is the total number of internal drives on each specific ProLiant server.
	Cache	64 MB Read Cache
	Battery-Backed Write Cache	Yes, with installation of Battery-Backed Write Cache Enabler, up to 64MB
	RAID Support	0, 1, 1+0, 5
	Logical Drives (maximum)	Maximum = total number of drives
	Online Configuration	Yes
	Online Capacity Expansion	Yes
	Logical Drive Capacity Extension	Yes
	Online Stripe Size Migration	Yes
	Online RAID Level Migration	Yes
	Online Spare Support	Yes
	Automatic Data Recovery	Yes
	Drive Roaming	Yes
	Redundant Controllers	No

Embedded NC7782 PCI-X Gigabit Server Adapter	Network Interface	10Base-T/100Base-TX/1000 BaseTX	
	Compatibility	IEEE 802.3/802.3u compliant	
	Data Transfer Method	64-bit bus-master PCI-X	
	Network Transfer Rate	10Base-T (Half-Duplex)	10 Mb/s
		10Base-T (Full-Duplex)	20 Mb/s
		100Base-TX (Half-Duplex)	100 Mb/s
		100Base-TX (Full-Duplex)	200 Mb/s
		1000Base-TX (Half and Full-Duplex)	2000 Mb/s
	Connector	RJ-45	
	Cable Support	10Base-T	Categories 3, 4 or 5 UTP; up to 328 ft (100 m)
		100Base-TX	Category 5 UTP; up to 328 ft (100 m)
		1000Base-TX	Category 5 UTP; up to 328 ft (100 m)

Environment-friendly Products and Approach	End-of-life Management and Recycling	Hewlett-Packard offers end-of-life HP product return, trade-in, and recycling programs in many geographic areas. For trade-in information, please go to: http://www.hp.com/go/green. To recycle your product, please go to: http://www.hp.com/go/green or contact your nearest HP sales office. Products returned to HP will be recycled, recovered or disposed of in a responsible manner. The EU WEEE directive (2002/95/EC) requires manufacturers to provide treatment information for each product type for use by treatment facilities. This information (product disassembly instructions) is posted on the Hewlett Packard web site at: http://www.hp.com/go/green. These instructions may be used by recyclers and other WEEE treatment facilities as well as HP OEM customers who integrate and re-sell HP equipment.

© Copyright 2008 Hewlett-Packard Development Company, L.P.

The information contained herein is subject to change without notice.

Microsoft and Windows NT are US registered trademarks of Microsoft Corporation. Intel is a US registered trademark of Intel Corporation.

Intel, the Intel logo, Xeon and Xeon Inside are trademarks of Intel Corporation in the U.S. and other countries.

The only warranties for HP products and services are set forth in the express warranty statements accompanying such products and services. Nothing herein should be construed as constituting an additional warranty. HP shall not be liable for technical or editorial errors or omissions contained herein.

For hard drives, 1 GB = 1 billion bytes. Actual formatted capacity is less.