HP ProLiant DL380 Generation 4 Server Reference and Troubleshooting Guide



December 2004 (Third Edition)
Part Number 359214-003

© Copyright 2004 Hewlett-Packard Development Company, L.P.

Microsoft, MS-DOS, Windows, and Windows NT are U.S. registered trademarks of Microsoft Corporation.

Intel and Xeon are trademarks or registered trademarks of Intel Corporation or its subsidiaries in the US and other countries.

Linux is a U.S. registered trademark of Linus Torvalds.

Hewlett-Packard Company shall not be liable for technical or editorial errors or omissions contained herein. The information in this document is provided “as is” without warranty of any kind and is subject to change without notice. The warranties for HP products are set forth in the express limited warranty statements accompanying such products. Nothing herein should be construed as constituting an additional warranty.

December 2004 (Third Edition)
Part Number 359214-003

Audience Assumptions

This document is for the person who installs, administers, and troubleshoots servers and storage systems. HP assumes you are qualified in the servicing of computer equipment and trained in recognizing hazards in products with hazardous energy levels.

Contents

Server Component Identification 9

Front Panel Components 10
Front Panel LEDs and Buttons 11
Rear Panel Components 12
Rear Panel LEDs and Buttons 14
System Board Components 15
System Maintenance Switch 16
NMI Switch 17
Chassis ID Switch 17
DIMM Slots 18
System Board LEDs 19
System LEDs and Internal Health LED Combinations 20
SCSI Backplane Components 22
SCSI Backplane LEDs 23
Hot-Plug SCSI Hard Drive LEDs 24
Hot-Plug SCSI Hard Drive LED Combinations 25
Internal PCI Hot Plug LEDs and Button 26
PCI Hot Plug LED Status Combinations 26
PCI Riser Cage LED 27
Remote Management Connector 28
Identifying Hot-Plug Fans 29
Hot-Plug Fan LED 30
Power Converter Module LED 31
Battery-Backed Write Cache LEDs 31
Battery-Backed Write Cache LED Statuses 32

Server Operations 33

Powering Up the Server 33
Powering Down the Server 33
Extending the Server from the Rack 35
Removing the Access Panel 36
Installing the Access Panel 37

Server Setup 39

Optional Installation Services 39
Rack Planning Resources 40
Optimum Environment 40

Space and Airflow Requirements 40
Temperature Requirements 42
Power Requirements 42
Electrical Grounding Requirements 43
Rack Warnings 44
Identifying the Contents of the Server Shipping Carton 44
Installing Hardware Options 45
Installing the Server into the Rack 45
Installing the Operating System 49
Powering Up and Configuring the Server 49
Registering the Server 50

Hardware Options Installation 51

Introduction 51
Processor Option 52
Memory Options 55
DIMM Configuration Requirements 57
Online Spare Memory Configuration 58
Installing DIMMs 59
Hot-Plug SCSI Hard Drive Options 59
SCSI IDs 60
Removing a Hard Drive Blank 61
Installing a Hot-Plug SCSI Hard Drive 61
Removing a Hot-Plug SCSI Hard Drive 62
Installing a Diskette Drive 63
Hot-Plug Tape Drive Option 65
Redundant Hot-Plug Fans 66
Installation Requirements 67
Identifying Hot-Plug Fans 68
Installing Redundant Hot-Plug Fans 68
Front Fan Bracket 69
Battery-Backed Write Cache Option 70
Redundant Hot-Plug AC Power Supply Option 73
PCI Riser Cage Options 75
Installing the PCI Riser Cage 75
Removing the PCI Riser Cage 76
Expansion Board Options 77
Removing Expansion Slot Cover 1 77
Removing Expansion Slot Covers 2 and 3 78
Installing a Non-Hot-Plug Expansion Board 79
Installing PCI Hot Plug Expansion Boards 81

Server Cabling 85

Cabling 85

Hot-Plug SCSI Hard Drive Cabling 85
Embedded Simplex SCSI Cabling 86
Embedded Duplex SCSI Cabling 87
PCI Simplex SCSI Cabling 88
PCI Duplex SCSI Cabling 89
Mixed Duplex SCSI Cabling 89
Installing the SCSI Terminator Board 91
Removing the SCSI Terminator Board 92
USB Cabling 93
DVD/CD-ROM Drive Cabling 94
Diskette Drive Cabling 94
Power Button/LED Cabling 95
Optional PCI Hot Plug Backplane Cabling 96
RILOE II Cabling 97
Internal Power Cabling 97
External Storage Cabling 98

Server Software and Configuration Utilities 101

Configuration Tools 101
SmartStart Software 101
HP ROM-Based Setup Utility 103
Array Configuration Utility 106
Option ROM Configuration for Arrays 106
HP ProLiant Essentials Rapid Deployment Pack 107
Re-Entering the Server Serial Number and Product ID 107
Management Tools 108
Automatic Server Recovery 108
ROMPaq Utility 109
System Online ROM Flash Component Utility 109
Integrated Lights-Out Technology 110
StorageWorks Library and Tape Tools 110
Management Agents 111
HP Systems Insight Manager 111
Redundant ROM Support 111
iLO ROM-Based Setup Utility 113
USB Support 114
Diagnostic Tools 114
Survey Utility 115
Array Diagnostic Utility 115
HP Insight Diagnostics 115
Integrated Management Log 116
Keeping the System Current 116
Drivers 117

Resource Paqs 117
ProLiant Support Packs 118
Operating System Version Support 118
PaqFax 118
Change Control and Proactive Notification 118
Natural Language Search Assistant 118
Care Pack 119

Troubleshooting 121

Server Diagnostic Steps 121
Important Safety Information 121
Preparing the Server for Diagnosis 125
Symptom Information 126
Diagnostic Steps 127
Procedures for All ProLiant Servers 141
Hardware Problems 141
Software Problems 172
Contacting HP 182
Error Messages 190
ADU Error Messages 190
POST Error Messages and Beep Codes 223
Event List Error Messages 253

Regulatory Compliance Notices 259

Regulatory Compliance Identification Numbers 259
Federal Communications Commission Notice 259
FCC Rating Label 260
Declaration of Conformity for Products Marked with the FCC Logo, United States Only 260
Modifications 261
Cables 261
Mouse Compliance Statement 261
Canadian Notice 261
European Union Notice 262
Japanese Notice 262
BSMI Notice 263
Laser Compliance 263
Taiwan Battery Recycling Notice 264

Electrostatic Discharge 265

Preventing Electrostatic Discharge 265
Grounding Methods to Prevent Electrostatic Discharge 266

Server Specifications 267

Server Specifications 267

Environmental Specifications 268

Technical Support **269**

Related Documents 269
HP Contact Information 269
Before You Contact HP 270

Acronyms and Abbreviations **271**

Index **275**

Server Component Identification

In This Section

Front Panel Components 10
Front Panel LEDs and Buttons 11
Rear Panel Components 12
Rear Panel LEDs and Buttons 14
System Board Components 15
System Board LEDs 19
System LEDs and Internal Health LED Combinations 20
SCSI Backplane Components 22
SCSI Backplane LEDs 23
Hot-Plug SCSI Hard Drive LEDs 24
Hot-Plug SCSI Hard Drive LED Combinations 25
Internal PCI Hot Plug LEDs and Button 26
PCI Hot Plug LED Status Combinations 26
PCI Riser Cage LED 27
Remote Management Connector 28
Identifying Hot-Plug Fans 29
Hot-Plug Fan LED 30
Power Converter Module LED 31
Battery-Backed Write Cache LEDs 31
Battery-Backed Write Cache LED Statuses 32

Front Panel Components

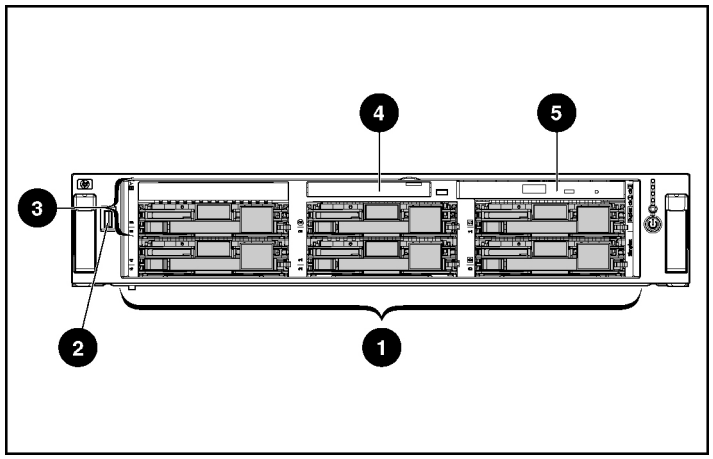

Item	Description
1	Hard drive bays
2	USB port
3	Bay for tape drive or hard drive with tape drive blank
4	Diskette drive bay
5	DVD/CD-ROM drive

Front Panel LEDs and Buttons

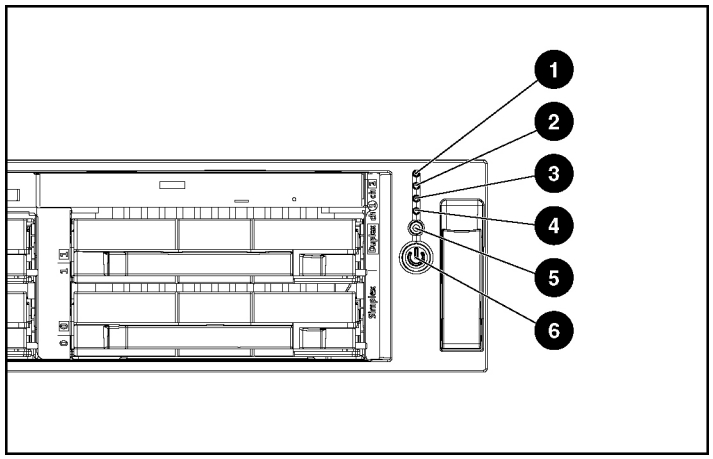

Item	Description	Status
1	Internal health LED	Green = Normal Amber = System degraded. Refer to system board LEDs to identify component in degraded state. Red = System critical. Refer to system board LEDs to identify component in critical state.
2	External health LED (power supply)	Green = Normal Amber = Power redundancy failure Red = Critical power supply failure
3	NIC 1 link/activity LED	Green = Network link Flashing = Network link and activity Off = No link to network. If power is off, view the rear panel RJ-45 LEDs for status.
4	NIC 2 link/activity LED	Green = Network link Flashing = Network link and activity Off = No link to network. If power is off, view the rear panel RJ-45 LEDs for status.

Item	Description	Status
5	UID LED button	Blue = Activated Flashing = System being remotely managed Off = Deactivated
6	Power On/Standby button/system power LED	Green = System on Amber = System shut down, but power still applied Off = Power cord not attached or power supply failure

Rear Panel Components

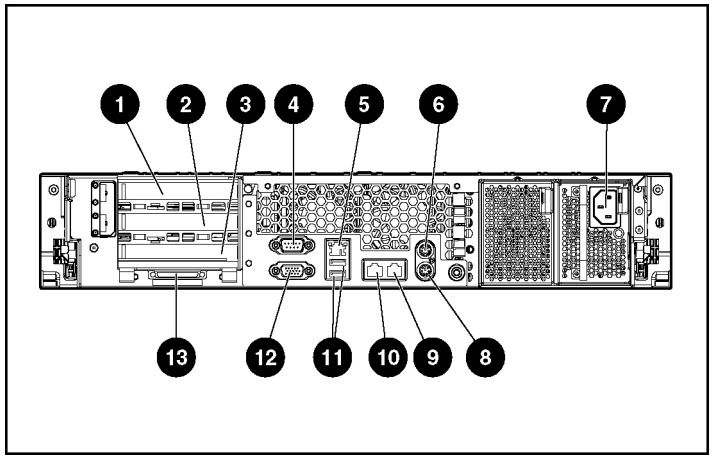

Item	Description	Connector Color
1	• PCI-X expansion slot 3, 64-bit/100 MHz, Bus B • Hot-pluggable PCI-X expansion slot 3, 64-bit/100 MHz, Bus B • PCI Express x4 slot 2, Bus B*	N/A

Item	Description	Connector Color
2	• PCI-X expansion slot 2, 64-bit/100 MHz, Bus B • Hot-pluggable PCI-X expansion slot 2, 64-bit/100 MHz, Bus B • PCI Express x4 slot 1, Bus A*	N/A
3	• PCI-X non hot pluggable expansion slot 1, 64-bit/133 MHz, Bus A • Optional PCI-X hot pluggable expansion slot 1, 64-bit/133 MHz, Bus A	N/A
4	Serial connector	Teal
5	iLO connector	N/A
6	Mouse connector	Green
7	Power cord connector	N/A
8	Keyboard connector	Purple
9	NIC 1 connector	N/A
10	NIC 2 connector	N/A
11	USB connectors	Black
12	Video connector	Blue
13	VHDCI SCSI connector (port 1)	N/A

* x8 PCI Express cards are supported and will run at x4 speeds.

Rear Panel LEDs and Buttons

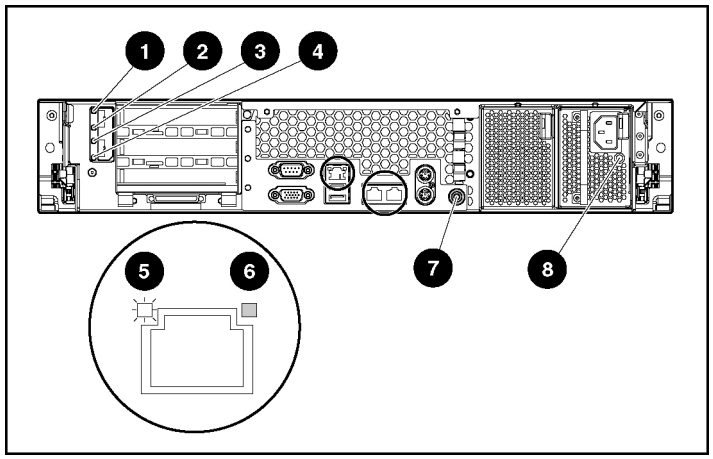

Item	Description	LED Color	Status
1	PCI Hot Plug fault LED (slot 3)*	Amber	On = Expansion board failed Off = Normal
2	PCI Hot Plug power LED (slot 3)*	Green	On = Power is applied to the slot Flashing = Power is cycling Off = Power is not applied to the slot
3	PCI Hot Plug fault LED (slot 2)*	Amber	On = Expansion board failed Off = Normal
4	PCI Hot Plug power LED (slot 2)*	Green	On = Power is applied to the slot Flashing = Power is cycling Off = Power is not applied to the slot
5	RJ-45 activity LED	Green	On or flashing = Network activity Off = No network activity
6	RJ-45 link LED	Green	On = Linked to network Off = Not linked to network

Item	Description	LED Color	Status
7	UID LED button	Blue	On = Activated Flashing = System remotely managed Off = Deactivated
8	Power supply LED	Green	On = Power turned on and power supply functioning properly Off = One or more of the following conditions exists: • AC power unavailable • Power supply failed • Power supply in standby mode • Power supply exceeded current limit

* This LED is only available when using the hot-plug expansion cage option.

System Board Components

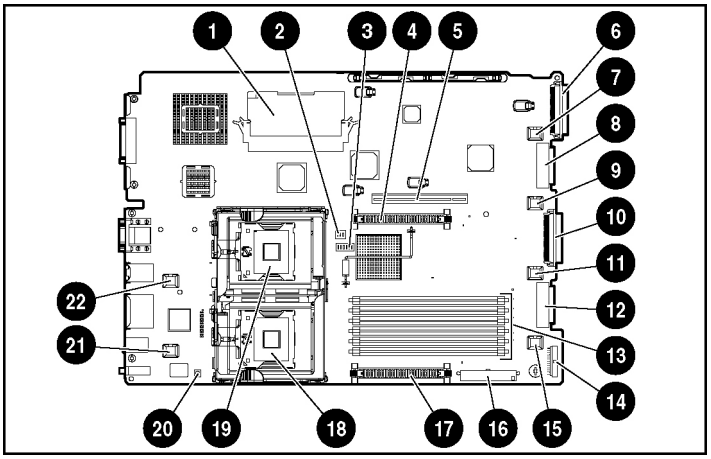

Item	Description	Item	Description
1	Smart Array 6i Cache Module Option	12	Diskette drive system connector
2	Chassis ID switch	13	DIMM slots (1-6)
3	System maintenance switch	14	Power supply signal connector
4	Processor power module (PPM) slot 2	15	Fan 6 connector
5	PCI riser cage connector	16	System power connector
6	SCSI connector (port 2)	17	PPM slot 1
7	Fan 3 connector	18	Processor socket 1
8	DVD/CD-ROM drive system connector	19	Processor socket 2
9	Fan 4 connector	20	NMI switch
10	SCSI connector (port 1)	21	Fan 2 connector
11	Fan 5 connector	22	Fan 1 connector

System Maintenance Switch

Position	Default	Function
S1	Off	Off = iLO security is enabled. On = iLO security is disabled.
S2	Off	Off = System configuration can be changed. On = System configuration is locked.
S3	Off	Reserved
S4	Off	Off = Booting from diskette is controlled by RBSU. On = Booting from diskette is enabled and RBSU is overridden.

Position	Default	Function
S5	Off	Off = No function On = Clears power-on password and administrator password
S6	Off	Off = No function On = Clear NVRAM.

When the system maintenance switch position 6 is set to the On position, the system is prepared to erase all system configuration settings from both CMOS and NVRAM.



CAUTION: Clearing CMOS and/or NVRAM deletes configuration information. Be sure to properly configure the server or data loss could occur.

NMI Switch

The NMI switch allows administrators to perform a memory dump before performing a hard reset. Crash dump analysis is an essential part of eliminating reliability problems, such as hangs or crashes in operating systems, device drivers, and applications. Many crashes freeze a system, requiring you to do a hard reset. Resetting the system erases any information that would support root cause analysis.

Systems running Microsoft® Windows® operating systems experience a blue screen trap when the operating system crashes. When this happens, Microsoft® recommends that system administrators perform an NMI event by pressing a dump switch. The NMI event enables a hung system to become responsive again.

Chassis ID Switch

The chassis ID switch on the system board is reserved for use by authorized technicians only. Do not modify the switch setting.

DIMM Slots

DIMM slots are numbered sequentially (1 through 6) and the paired banks are identified by the letters A, B, and C.

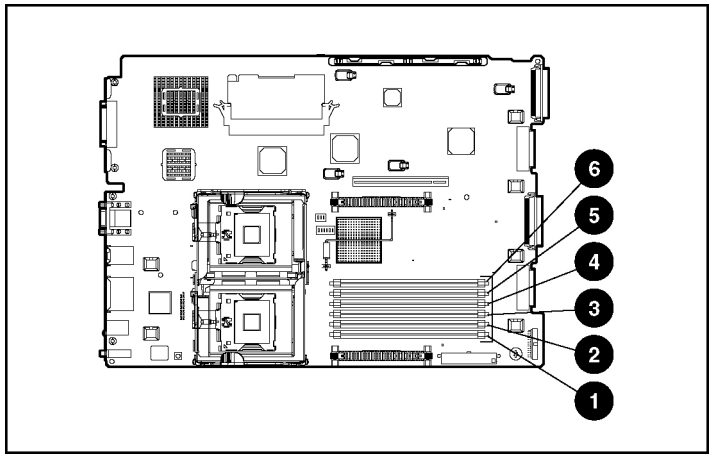

Item	Description
1	DIMM slot 1A
2	DIMM slot 2A
3	DIMM slot 3B
4	DIMM slot 4B
5	DIMM slot 5C
6	DIMM slot 6C

System Board LEDs

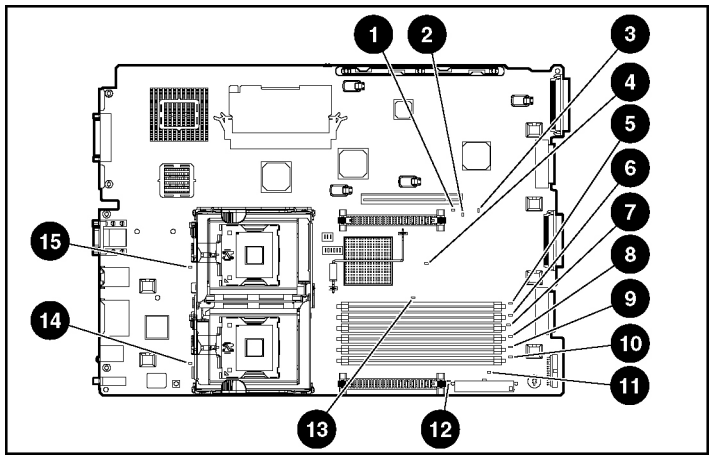

Item	LED Description	Status
1	PPM 2 failure	Amber = PPM failed Off = Normal
2	Overtemperature	Amber = Cautionary or critical temperature level detected Off = Temperature OK
3	Riser interlock	Amber = PCI riser cage not seated Off = PCI riser cage is seated
4	Fan failure LED	Off = Fan is not powered Green = Normal Amber = Failure
5	DIMM 6C failure	Amber = Memory failed* Off = Normal
6	DIMM 5C failure	Amber = Memory failed* Off = Normal
7	DIMM 4B failure	Amber = Memory failed* Off = Normal

Item	LED Description	Status
8	DIMM 3B failure	Amber = Memory failed* Off = Normal
9	DIMM 2A failure	Amber = Memory failed* Off = Normal
10	DIMM 1A failure	Amber = Memory failed* Off = Normal
11	Online spare memory	Amber = Failover, online spare memory in use Green = Enabled, but not in use Off = Disabled
12	PPM 1 failure	Amber = PPM failed Off = Normal
13	iLO diagnostic LEDs	Refer to the *HP Integrated Lights-Out User Guide* on the Documentation CD.
14	Processor 1 failure	Amber = Processor failed Off = Normal
15	Processor 2 failure	Amber = Processor failed Off = Normal

*If all DIMM failure LEDs are lit, the memory configuration is invalid. Refer to "DIMM Configuration Requirements (on page 57)" for proper memory configuration.

System LEDs and Internal Health LED Combinations

When the internal health LED on the front panel illuminates either amber or red, the server is experiencing a health event. Combinations of illuminated system LEDs and the internal health LED indicate system status.

The front panel health LEDs indicate only the current hardware status. In some situations, HP SIM may report server status differently than the health LEDs because the software tracks more system attributes.

System LED and Color	Internal Health LED Color	Status
Processor failure, socket *X* (Amber)	Red	One or more of the following conditions may exist: • Processor in socket *X* has failed. • Processor *X* is not installed in the socket. • Processor *X* is unsupported. • ROM detects a failed processor during POST.
	Amber	Processor in socket *X* is in a pre-failure condition.
PPM failure, slot *X* (Amber)	Red	• PPM in slot *X* has failed. • PPM is not installed in slot *X*, but the corresponding processor is installed.
DIMM failure, slot *X* (Amber)	Red	• DIMM in slot *X* has failed.
	Amber	• DIMM in slot *X* is in a pre-failure condition.
DIMM failure, all slots in one bank (Amber)	Red	No valid or usable memory is installed in the system.
Overtemperature (Amber)	Red	• The Health Driver has detected a cautionary temperature level. • The server has detected a hardware critical temperature level.
Riser interlock (Amber)	Red	PCI riser cage is not seated.
Online spare memory (Amber)	Amber	Bank *X* failed over to the online spare memory bank.
Power converter module (Amber)	Red	Power converter module has failed.
Fan (Amber)	Amber	Redundant fan has failed.
	Red	The minimum fan requirements are not being met. One or more fans have failed or are missing.
SCSI configuration error (Amber)	Red	SCSI cabling or terminator configuration is incorrect for SCSI backplane.

SCSI Backplane Components

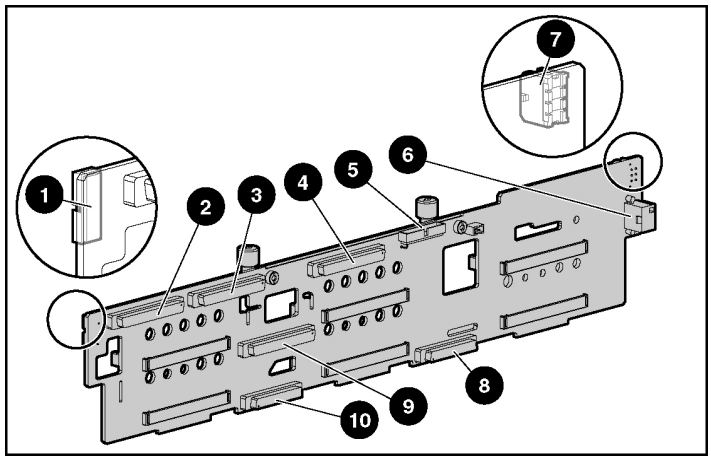

Item	Description
1	Power button/LED system connector
2	SCSI connector (port 2)
3	DVD/CD-ROM drive connector
4	SCSI connector (port 1)
5	Diskette drive connector
6	Power connector
7	USB system connector
8	Diskette drive system connector
9	SCSI connector (used with a jumper cable in simplex mode or terminator board in duplex mode)
10	DVD/CD-ROM drive system connector

SCSI Backplane LEDs

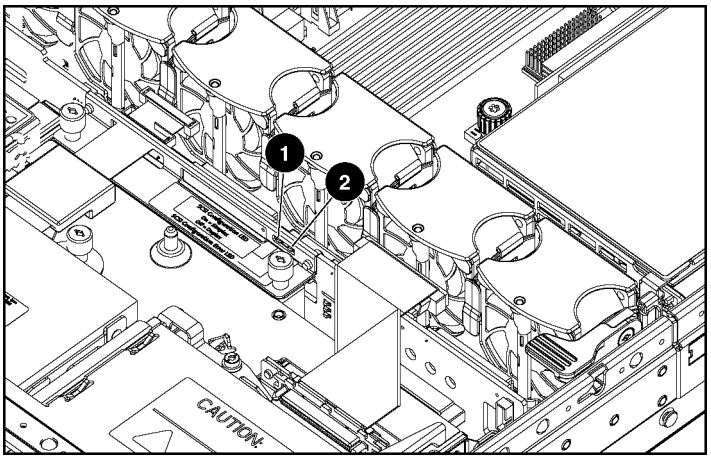

Item	LED Description	Status
1	SCSI configuration	On = Simplex Off = Duplex
2	SCSI configuration error	On = SCSI cabling or terminator configuration is incorrect Off = SCSI cabling or terminator configuration is correct

Hot-Plug SCSI Hard Drive LEDs

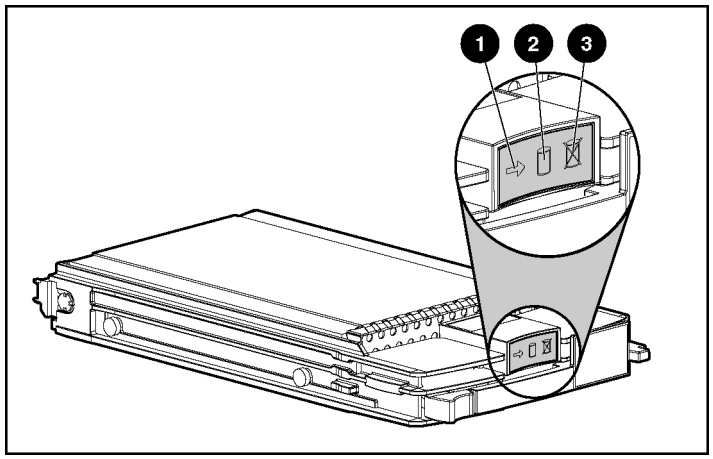

Item	LED Description	Status
1	Activity status	On = Drive activity Flashing = High activity on the drive or drive is being configured as part of an array. Off = No drive activity
2	Online status	On = Drive is part of an array and is currently working. Flashing = Drive is actively online. Off = Drive is offline.
3	Fault status	On = Drive failure Flashing = Fault-process activity Off = No fault-process activity

Hot-Plug SCSI Hard Drive LED Combinations

Activity LED (1)	Online LED (2)	Fault LED (3)	Interpretation
On, off, or flashing	On or off	Flashing	A predictive failure alert has been received for this drive. Replace the drive as soon as possible.
On, off, or flashing	On	Off	The drive is online and is configured as part of an array. If the array is configured for fault tolerance and all other drives in the array are online, and a predictive failure alert is received or a drive capacity upgrade is in progress, you may replace the drive online.
On or flashing	Flashing	Off	**Do not remove the drive. Removing a drive may terminate the current operation and cause data loss.** The drive is rebuilding or undergoing capacity expansion.
On	Off	Off	**Do not remove the drive.** The drive is being accessed, but (1) it is not configured as part of an array; (2) it is a replacement drive and rebuild has not yet started; or (3) it is spinning up during the POST sequence.
Flashing	Flashing	Flashing	**Do not remove the drive. Removing a drive may cause data loss in non-fault-tolerant configurations.** Either (1) the drive is part of an array being selected by an array configuration utility; (2) Drive Identification has been selected in HP SIM; or (3) drive firmware is being updated.
Off	Off	On	The drive has failed and has been placed offline. You may replace the drive.
Off	Off	Off	Either (1) the drive is not configured as part of an array; (2) the drive is configured as part of an array, but it is a replacement drive that is not being accessed or being rebuilt yet; or (3) the drive is configured as an online spare. If the drive is connected to an array controller, you may replace the drive online.

Internal PCI Hot Plug LEDs and Button

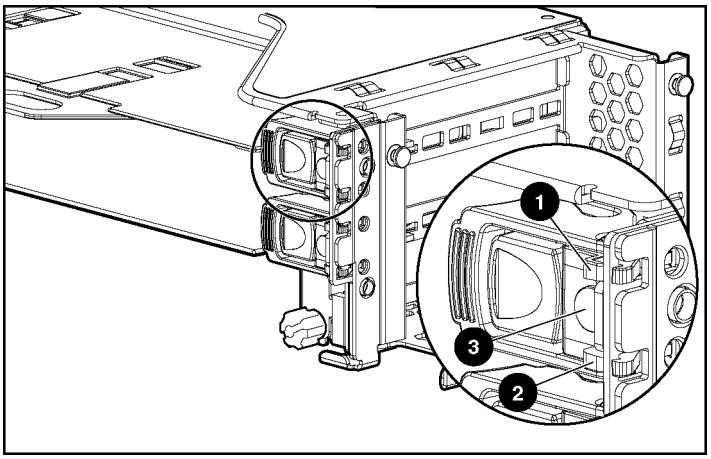

NOTE: Hot-plug LEDs are available only with the optional hot-plug PCI riser cage.

Item	Description	Status
1	Fault LED (Amber)	On = Expansion board failed. Off = Normal
2	Power LED (Green)	On = Power is applied to the slot. Flashing = Power is cycling. Off = Power is not applied to the slot.
3	PCI Hot Plug button	N/A

PCI Hot Plug LED Status Combinations

Power LED (Green)	Fault LED (Amber)	OK to open?	Slot Status
On	Off	No	The power to the slot is on and the slot is functioning normally. **Do NOT open the slot release lever**.

Power LED (Green)	Fault LED (Amber)	OK to open?	Slot Status
On	On	No	The power to the slot is on, but the slot needs attention for a possible problem with the slot, board, or driver. **DO NOT open the slot release lever.** Examine the logs and HP SIM. If the expansion board is faulty, remove or replace the board.
Flashing	On or off	No	The power to the slot is being turned off or on, which may take several seconds. **DO NOT open the slot release lever.** To cancel the operation, press the PCI Hot Plug button.
Off	On	Yes	The power to the slot is off, but the slot needs attention for a possible problem with the slot, board, or driver.
Off	Off	Yes	The power to the slot is off.

PCI Riser Cage LED

CAUTION: To prevent damage to the server or expansion boards, power down the server and remove all AC power cords before removing or installing the PCI riser cage.

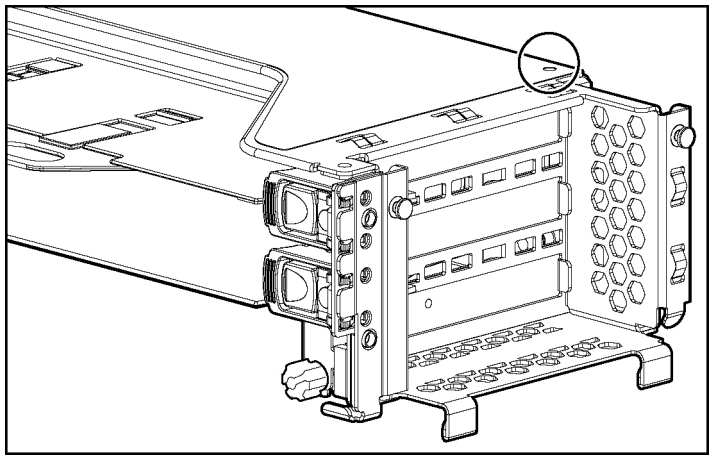

Status
On = AC power connected
Off = AC power disconnected

Remote Management Connector

The 30-pin remote management connector, located on the PCI riser cage, is used to cable the Remote Insight Lights-Out Edition II option. For more information, refer to "RILOE II Cabling (on page 97)" or the *Remote Insight Lights-Out Edition II User Guide* on the Documentation CD.

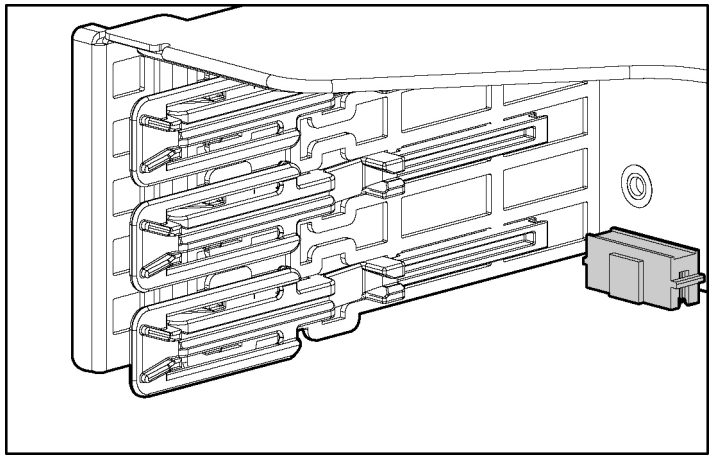

Identifying Hot-Plug Fans

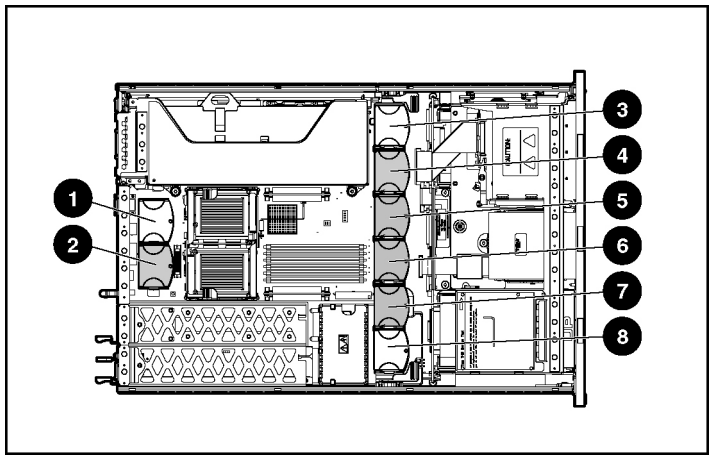

Item	Description	Configuration
1	Fan 1	Redundant
2	Fan 2	Primary
3	Fan 3	Redundant
4	Fan 4	Primary
5	Fan 5	Primary
6	Fan 6	Primary
7	Fan 7	Primary
8	Fan 8	Redundant

Hot-Plug Fan LED

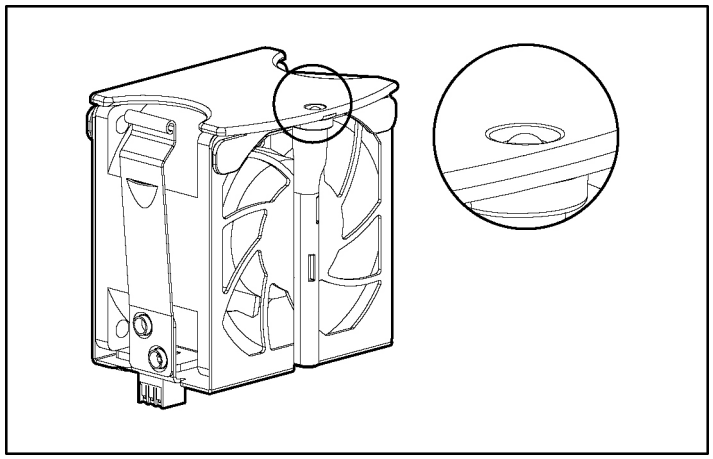

Status
Green = Operating normally
Amber = Failed
Off = No power

Power Converter Module LED

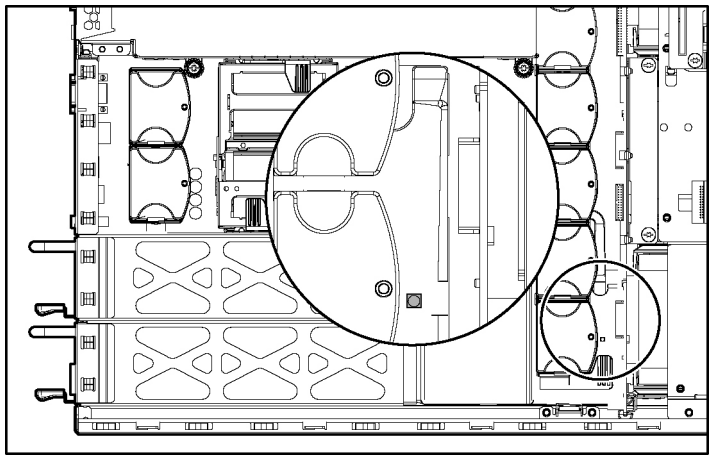

Status
Amber = Failed
Off = Operating normally

Battery-Backed Write Cache LEDs

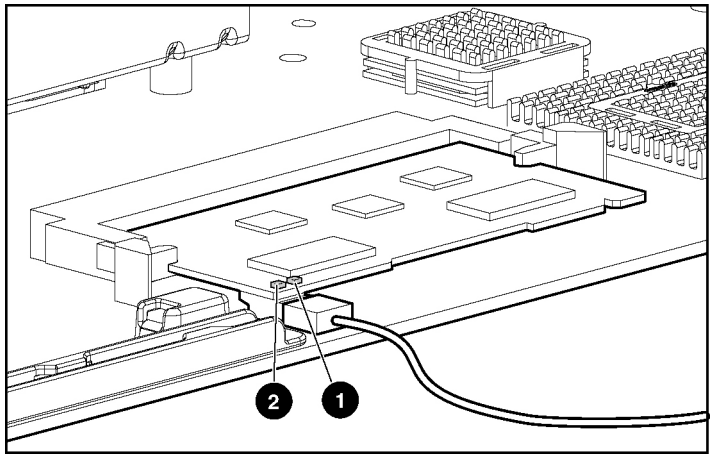

Item	LED Color
1	Amber
2	Green

For LED status information, refer to "Battery-Backed Write Cache LED Statuses (on page 32)."

Battery-Backed Write Cache LED Statuses

Server Status	LED Status	Battery Module Status
Server is on and has normal run time	Green = On	Fast charging
	Green = Flashing	The microcontroller is waiting for communication from the host controller.
	Green = Off	The battery is fully charged.
	Amber = On	A short exists in the connection of one or more of the three button cells within the battery module.
	Amber = Flashing	An open exists in the circuit between the positive and negative terminals of the battery module.
	Amber = Off	Normal
Server is off and is in data retention mode	Amber = Flashing every 15 seconds	User data held in the write cache is being backed up.

Server Operations

In This Section

Powering Up the Server....33
Powering Down the Server....33
Extending the Server from the Rack....35
Removing the Access Panel....36
Installing the Access Panel....37

Powering Up the Server

To power up the server, press the Power On/Standby button.

Powering Down the Server

WARNING: To reduce the risk of personal injury, electric shock, or damage to the equipment, remove the power cord to remove power from the server. The front panel Power On/Standby button does not completely shut off system power. Portions of the power supply and some internal circuitry remain active until AC power is removed.

IMPORTANT: If installing a hot-plug device, it is not necessary to power down the server.

1. Back up the server data.
2. Shut down the operating system as directed by the operating system documentation.
3. If the server is installed in a rack, press the UID LED button on the front panel (1). Blue LEDs illuminate on the front and rear panels of the server.

4. Press the Power On/Standby button to place the server in standby mode (2). When the server activates standby power mode, the system power LED changes to amber.

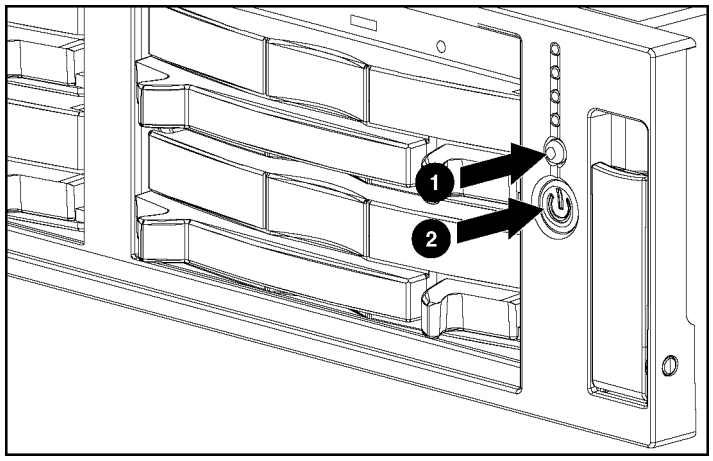

5. If the server is installed in a rack, locate the server by identifying the illuminated rear UID LED button.
6. Disconnect the power cords.

The system is now without power.

Extending the Server from the Rack

1. Pull down the quick release levers on each side of the server to release the server from the rack.

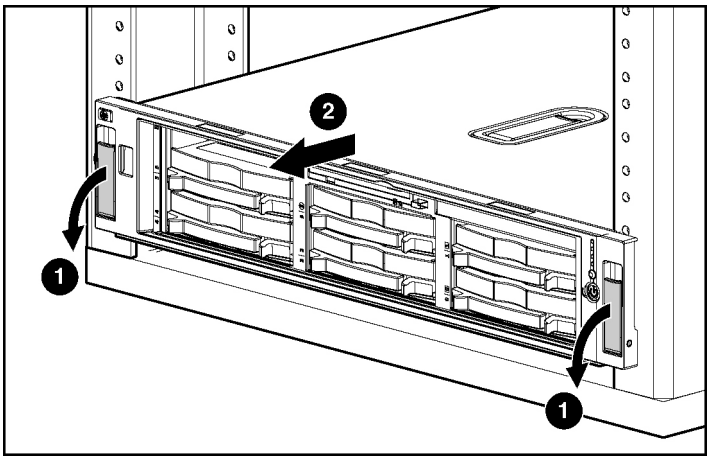

2. Extend the server on the rack rails until the server rail-release latches engage.

WARNING: To reduce the risk of personal injury or equipment damage, be sure that the rack is adequately stabilized before extending a component from the rack.

WARNING: To reduce the risk of personal injury, be careful when pressing the server rail-release latches and sliding the server into the rack. The sliding rails could pinch your fingers.

3. After performing the installation or maintenance procedure, slide the server back into the rack:

a. Press the server rail-release latches and slide the server fully into rack.

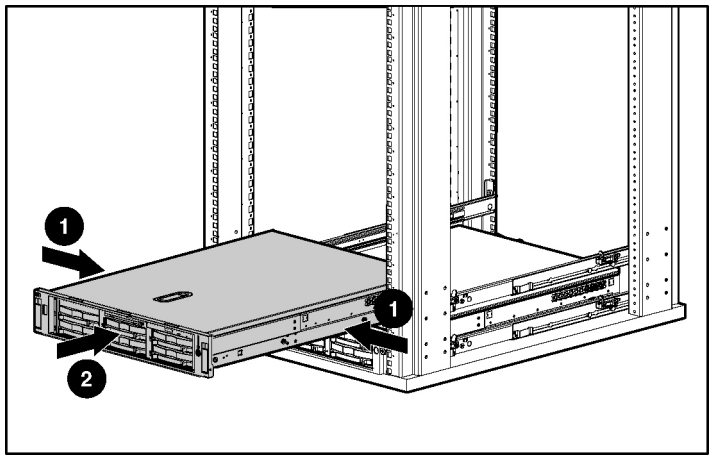

b. Press the server firmly into the rack to secure it in place.

Removing the Access Panel

WARNING: To reduce the risk of personal injury from hot surfaces, allow the drives and the internal system components to cool before touching them.

CAUTION: Do not operate the server for long periods without the access panel. Operating the server without the access panel results in improper airflow and improper cooling that can lead to thermal damage.

1. Power down the server if performing a non-hot-plug installation or maintenance procedure ("Powering Down the Server" on page 33).
2. Extend the server from the rack, if applicable ("Extending the Server from the Rack" on page 35).
3. Lift up on the hood latch handle and remove the access panel.

Installing the Access Panel

1. Place the access panel on top of the server with the hood latch open. Allow the panel to extend past the rear of the server approximately 1.25 cm (0.5 in).
2. Push down on the hood latch. The access panel slides to a closed position.

Server Setup

In This Section

Optional Installation Services....39
Rack Planning Resources....40
Optimum Environment....40
Rack Warnings....44
Identifying the Contents of the Server Shipping Carton....44
Installing Hardware Options....45
Installing the Server into the Rack....45
Installing the Operating System....49
Powering Up and Configuring the Server....49
Registering the Server....50

Optional Installation Services

Delivered by experienced, certified engineers, HP Care Pack services help you keep your servers up and running with support packages tailored specifically for HP ProLiant systems. HP Care Packs let you integrate both hardware and software support into a single package. A number of service level options are available to meet your needs.

HP Care Pack Services offer upgraded service levels to expand your standard product warranty with easy-to-buy, easy-to-use support packages that help you make the most of your server investments. Some of the Care Pack services are:

- Hardware support
  - 6-Hour Call-to-Repair
  - 4-Hour 24x7 Same Day
  - 4-Hour Same Business Day
- Software support
  - Microsoft®

  - Linux
  - HP ProLiant Essentials (HP SIM and RDP)
  - VMWare
- Integrated hardware and software support
  - Critical Service
  - Proactive 24
  - Support Plus
  - Support Plus 24
- Startup and implementation services for both hardware and software

For more information on Care Packs, refer to the HP website (http://www.hp.com/hps/carepack/servers/cp_proliant.html).

Rack Planning Resources

The rack resource kit ships with all HP branded or Compaq branded 9000, 10000, and H9 series racks. For more information on the content of each resource, refer to the rack resource kit documentation.

If you intend to deploy and configure multiple servers in a single rack, refer to the white paper on high-density deployment at the HP website (http://www.hp.com/products/servers/platforms).

Optimum Environment

When installing the server in a rack, select a location that meets the environmental standards described in this section.

Space and Airflow Requirements

To allow for servicing and adequate airflow, observe the following space and airflow requirements when deciding where to install a rack:

- Leave a minimum clearance of 63.5 cm (25 in) in front of the rack.
- Leave a minimum clearance of 76.2 cm (30 in) behind the rack.
- Leave a minimum clearance of 121.9 cm (48 in) from the back of the rack to the back of another rack or row of racks.

HP servers draw in cool air through the front door and expel warm air through the rear door. Therefore, the front and rear rack doors must be adequately ventilated to allow ambient room air to enter the cabinet, and the rear door must be adequately ventilated to allow the warm air to escape from the cabinet.



CAUTION: To prevent improper cooling and damage to the equipment, do not block the ventilation openings.

When there is vertical space in the rack not filled by a server or rack component, the gaps between the components cause changes in airflow through the rack and across the servers. Cover all gaps with blanking panels to maintain proper airflow.



CAUTION: Always use blanking panels to fill empty vertical spaces in the rack. This arrangement ensures proper airflow. Using a rack without blanking panels results in improper cooling that can lead to thermal damage.

The 9000 and 10000 Series racks provide proper server cooling from flow-through perforations in the front and rear doors that provide 64 percent open area for ventilation.



CAUTION: When using a Compaq branded 7000 Series rack, you must install the high airflow rack door insert [P/N 327281-B21 (42U) or P/N 157847-B21 (22U)] to provide proper front-to-back airflow and cooling.



CAUTION: If a third-party rack is used, observe the following additional requirements to ensure adequate airflow and to prevent damage to the equipment:

- Front and rear doors—If the 42U rack includes closing front and rear doors, you must allow 5,350 sq cm (830 sq in) of holes evenly distributed from top to bottom to permit adequate airflow (equivalent to the required 64 percent open area for ventilation).
- Side—The clearance between the installed rack component and the side panels of the rack must be a minimum of 7 cm (2.75 in).

Temperature Requirements

To ensure continued safe and reliable equipment operation, install or position the system in a well-ventilated, climate-controlled environment.

The maximum recommended ambient operating temperature (TMRA) for most server products is 35°C (95°F). The temperature in the room where the rack is located must not exceed 35°C (95°F).

 **CAUTION:** To reduce the risk of damage to the equipment when installing third-party options:

- Do not permit optional equipment to impede airflow around the server or to increase the internal rack temperature beyond the maximum allowable limits.
- Do not exceed the manufacturer's TMRA.

Power Requirements

Installation of this equipment must comply with local and regional electrical regulations governing the installation of information technology equipment by licensed electricians. This equipment is designed to operate in installations covered by NFPA 70, 1999 Edition (National Electric Code) and NFPA-75, 1992 (code for Protection of Electronic Computer/Data Processing Equipment). For electrical power ratings on options, refer to the product rating label or the user documentation supplied with that option.

 **WARNING: To reduce the risk of personal injury, fire, or damage to the equipment, do not overload the AC supply branch circuit that provides power to the rack. Consult the electrical authority having jurisdiction over wiring and installation requirements of your facility.**



CAUTION: Protect the server from power fluctuations and temporary interruptions with a regulating uninterruptible power supply (UPS). This device protects the hardware from damage caused by power surges and voltage spikes and keeps the system in operation during a power failure.

When installing more than one server, you may need to use additional power distribution devices to safely provide power to all devices. Observe the following guidelines:

- Balance the server power load between available AC supply branch circuits.
- Do not allow the overall system AC current load to exceed 80 percent of the branch circuit AC current rating.
- Do not use common power outlet strips for this equipment.
- Provide a separate electrical circuit for the server.

Electrical Grounding Requirements

The server must be grounded properly for proper operation and safety. In the United States, you must install the equipment in accordance with NFPA 70, 1999 Edition (National Electric Code), Article 250, as well as any local and regional building codes. In Canada, you must install the equipment in accordance with Canadian Standards Association, CSA C22.1, Canadian Electrical Code. In all other countries, you must install the equipment in accordance with any regional or national electrical wiring codes, such as the International Electrotechnical Commission (IEC) Code 364, parts 1 through 7. Furthermore, you must be sure that all power distribution devices used in the installation, such as branch wiring and receptacles, are listed or certified grounding-type devices.

Because of the high ground-leakage currents associated with multiple servers connected to the same power source, HP recommends the use of a PDU that is either permanently wired to the building's branch circuit or includes a nondetachable cord that is wired to an industrial-style plug. NEMA locking-style plugs or those complying with IEC 60309 are considered suitable for this purpose. Using common power outlet strips for the server is not recommended.

Rack Warnings



WARNING: To reduce the risk of personal injury or damage to the equipment, be sure that:

- **The leveling jacks are extended to the floor.**
- **The full weight of the rack rests on the leveling jacks.**
- **The stabilizing feet are attached to the rack if it is a single-rack installation.**
- **The racks are coupled together in multiple-rack installations.**
- **Only one component is extended at a time. A rack may become unstable if more than one component is extended for any reason.**



WARNING: To reduce the risk of personal injury or equipment damage when unloading a rack:

- **At least two people are needed to safely unload the rack from the pallet. An empty 42U rack can weigh as much as 115 kg (253 lb), can stand more than 2.1 m (7 ft) tall, and may become unstable when being moved on its casters.**
- **Never stand in front of the rack when it is rolling down the ramp from the pallet. Always handle the rack from both sides.**

Identifying the Contents of the Server Shipping Carton

Unpack the server shipping carton and locate the materials and documentation necessary for installing the server. All the rack mounting hardware necessary for installing the server into the rack is included with the rack or the server.

The contents of the server shipping carton include:

- Server
- Power cord

- Hardware documentation, Documentation CD, and software products
- Rack mounting hardware

In addition to the supplied items, you may need:

- Operating system or application software
- Hardware options

Installing Hardware Options

Install any hardware options before initializing the server. For options installation information, refer to the option documentation. For server-specific information, refer to "Hardware Options Installation (on page 51)."

Installing the Server into the Rack



CAUTION: Always plan the rack installation so that the heaviest item is on the bottom of the rack. Install the heaviest item first, and continue to populate the rack from the bottom to the top.

1. Install the server and cable management arm into the rack. Refer to the installation instructions that ship with the 2U Quick Deploy Rail System for more information.
2. Connect peripheral devices to the server.



WARNING: To reduce the risk of electric shock, fire, or damage to the equipment, do not plug telephone or telecommunications connectors into RJ-45 connectors.

IMPORTANT: If the RILOE II board is installed in the server, be sure that you attach the video cable to the video connector on the rear of the RILOE II board. The standard video connector on the server rear panel is not used when the RILOE II board is installed. For more information, refer to the *HP Remote Insight Lights-Out Edition II User Guide*.

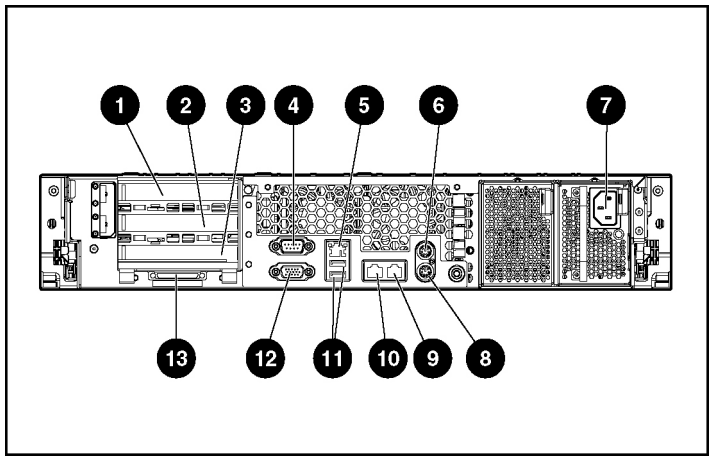

Item	Description	Connector Color
1	• PCI-X expansion slot 3, 64-bit/100 MHz, Bus B • Hot-pluggable PCI-X expansion slot 3, 64-bit/100 MHz, Bus B • PCI Express x4 slot 2, Bus B*	N/A
2	• PCI-X expansion slot 2, 64-bit/100 MHz, Bus B • Hot-pluggable PCI-X expansion slot 2, 64-bit/100 MHz, Bus B • PCI Express x4 slot 1, Bus A*	N/A
3	• PCI-X non hot pluggable expansion slot 1, 64-bit/133 MHz, Bus A • Optional PCI-X hot pluggable expansion slot 1, 64-bit/133 MHz, Bus A	N/A
4	Serial connector	Teal

Item	Description	Connector Color
5	iLO connector	N/A
6	Mouse connector	Green
7	Power cord connector	N/A
8	Keyboard connector	Purple
9	NIC 1 connector	N/A
10	NIC 2 connector	N/A
11	USB connectors	Black
12	Video connector	Blue
13	VHDCI SCSI connector (port 1)	N/A

* x8 PCI Express cards are supported and will run at x4 speeds.

3. Connect the power cord to the back of the server.
4. If you chose not to install the cable management arm, install the power cord anchor to the server.

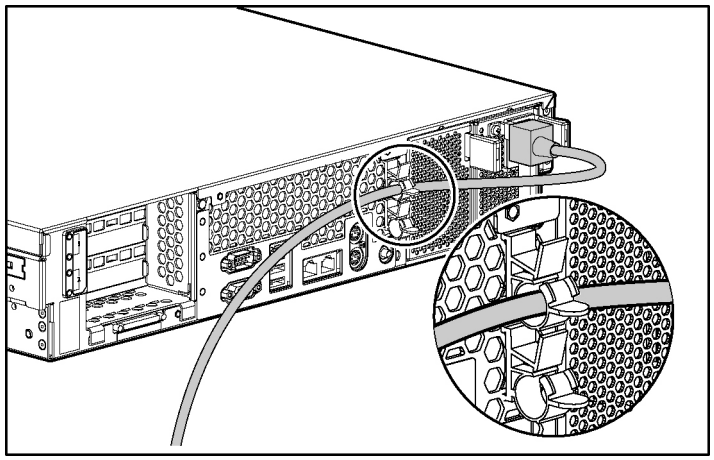

NOTE: Peripheral device cables are removed for clarity.

NOTE: If using the power cord anchor, be sure to leave enough slack in the power cord so that the redundant power supply can be removed without disconnecting the power cord from the primary power supply.

5. Secure cables to the cable management arm.

   IMPORTANT: When using cable management arm components, be sure to leave enough slack in each of the cables to prevent damage to the cables when the server is extended from the rack.

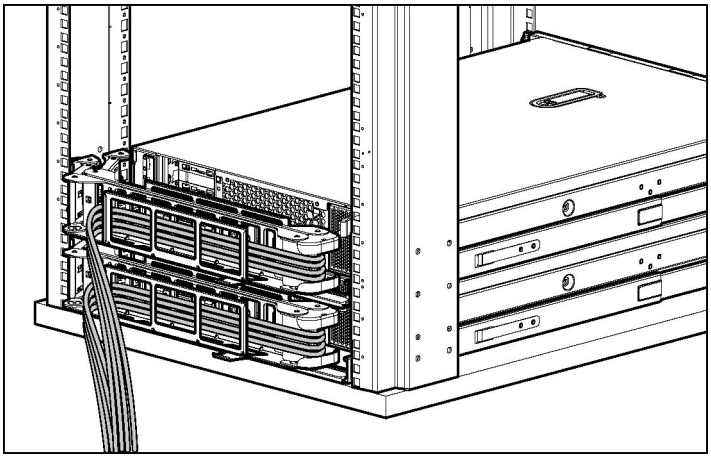

6. Connect the power cord to the AC power source.

   WARNING: To reduce the risk of electric shock or damage to the equipment:

   - **Do not disable the power cord grounding plug. The grounding plug is an important safety feature.**
   - **Plug the power cord into a grounded (earthed) electrical outlet that is easily accessible at all times.**
   - **Unplug the power cord from the power supply to disconnect power to the equipment.**

   Do not route the power cord where it can be walked on or pinched by items placed against it. Pay particular attention to the plug, electrical outlet, and the point where the cord extends from the server.

Installing the Operating System

To operate properly, the server must have a supported operating system. For the latest information on supported operating systems, refer to the HP website (http://www.hp.com/go/supportos).

Two methods are available to install an operating system on the server:

- SmartStart assisted installation—Insert the SmartStart CD into the CD-ROM drive and reboot the server.
- Manual installation—Insert the operating system CD into the CD-ROM drive and reboot the server. This process may require you to obtain additional drivers from the HP website (http://www.hp.com/support).

Follow the on-screen instructions to begin the installation process.

For information on using these installation paths, refer to the SmartStart installation poster in the HP ProLiant Essentials Foundation Pack, included with the server.

Powering Up and Configuring the Server

To power up the server, press the Power On/Standby button.

While the server boots, RBSU and the ORCA utility are automatically configured to prepare the server for operating system installation.

To configure these utilities manually:

- Press the **F8** key when prompted during the array controller initialization to configure the array controller using ORCA.
- Press the **F9** key when prompted during the boot process to change the server settings using RBSU. The system is set up by default for the English language.

For more information on the automatic configuration, refer to the *HP ROM-Based Setup Utility User Guide* located on the Documentation CD.

Registering the Server

To register a server, refer to the registration card in the HP ProLiant Essentials Foundation Pack or the HP Registration website (http://register.hp.com).

Hardware Options Installation

In This Section

Introduction 51
Processor Option 52
Memory Options 55
Hot-Plug SCSI Hard Drive Options 59
Installing a Diskette Drive 63
Hot-Plug Tape Drive Option 65
Redundant Hot-Plug Fans 66
Battery-Backed Write Cache Option 70
Redundant Hot-Plug AC Power Supply Option 73
PCI Riser Cage Options 75
Expansion Board Options 77

Introduction

If more than one option is being installed, read the installation instructions for all the hardware options and identify similar steps to streamline the installation process.



WARNING: To reduce the risk of personal injury from hot surfaces, allow the drives and the internal system components to cool before touching them.



CAUTION: To prevent damage to electrical components, properly ground the server before beginning any installation procedure. Improper grounding can cause electrostatic discharge.

Processor Option

The server supports single- and dual-processor operation. With two processors installed, the server supports boot functions through the processor installed in processor socket 1. However, if processor 1 fails, the system will attempt to boot from processor 2 and provide a processor failure message.

The server uses PPMs to provide power to each processor. The corresponding PPM must be installed for each processor or the system cannot boot.



CAUTION: To prevent thermal instability and damage to the server, do not separate the processor from the heatsink. The processor, heatsink, and retaining clip make up a single assembly.



CAUTION: To prevent possible server malfunction and damage to the equipment, do not mix processors of different types.

IMPORTANT: If upgrading processor speed, update the system ROM before installing the processor.

IMPORTANT: Processor socket 1 and PPM slot 1 must be populated at all times or the server will not function properly.

IMPORTANT: Always install a PPM when you install a processor. The system fails to boot if the corresponding PPM is missing.

To install a processor:

1. Power down the server ("Powering Down the Server" on page 33).
2. Extend the server from the rack, if applicable ("Extending the Server from the Rack" on page 35).
3. Remove the access panel ("Removing the Access Panel" on page 36).
4. Remove the processor air baffle, if applicable.
5. If an optional redundant fan is located next to the processor, remove the fan.

6. Open the processor retaining bracket.

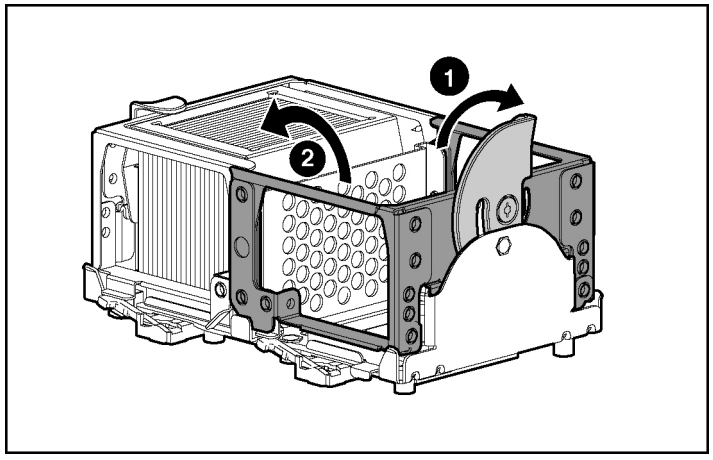

7. Release the processor locking lever.

CAUTION: Failure to completely open the processor locking lever prevents the processor from seating during installation, leading to hardware damage.

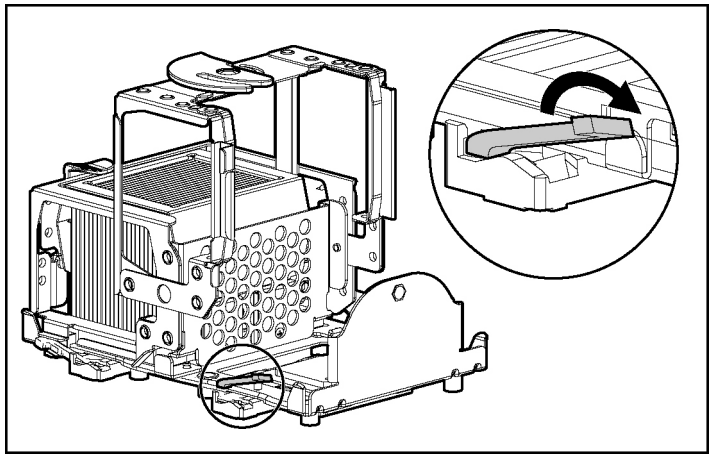

8. Install the processor.

CAUTION: To prevent possible server malfunction or damage to the equipment, be sure to completely close the processor locking lever.

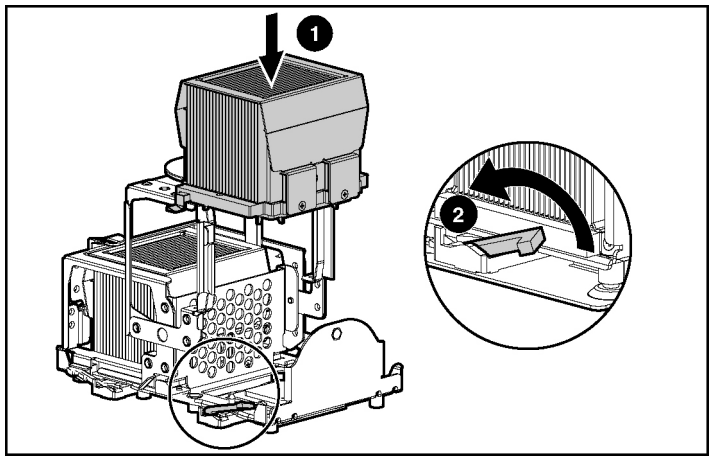

9. Close the processor retaining bracket.

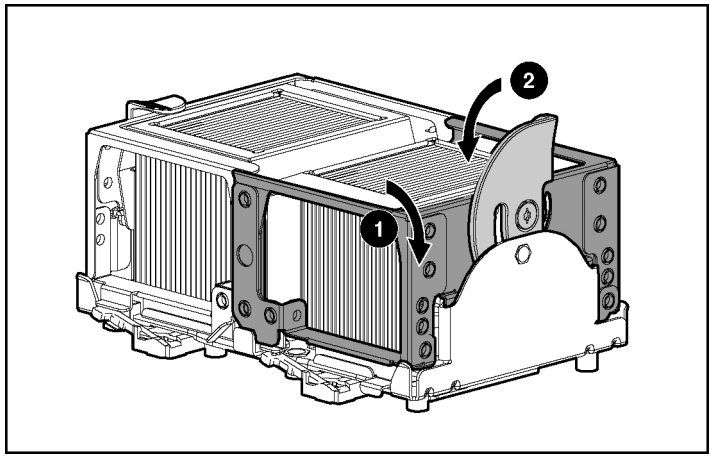

10. Open the latches on the corresponding PPM slot.

11. Install the PPM.

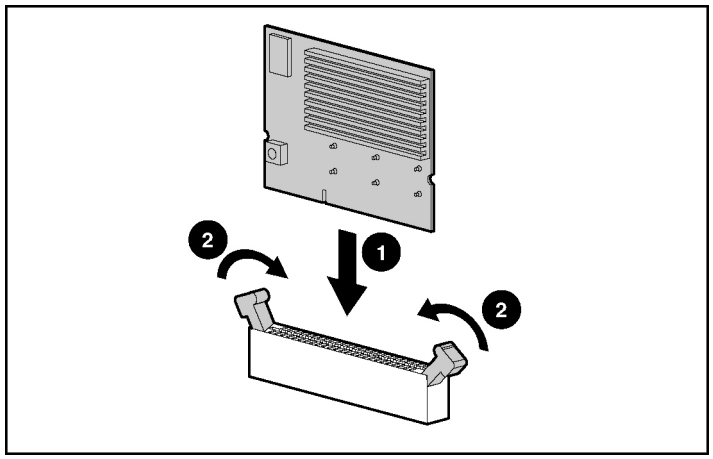

NOTE: The appearance of compatible PPMs may vary.

NOTE: The PPM is keyed and the key must be aligned when installed.

12. Install the fan ("Installing Redundant Hot-Plug Fans" on page 68).
13. Install the access panel ("Installing the Access Panel" on page 37).

Memory Options

You can expand server memory by installing PC2-3200 Registered DDR-2 SDRAM DIMMs. The server supports up to six DIMMs.

PC2-3200 DIMMs can either be single-rank or dual-rank. While it is not normally important for you to differentiate between these two types of DIMMs, certain DIMM configuration requirements are based on these classifications. Certain configuration requirements exist with single-rank and dual-rank DIMMs that allow the architecture to optimize performance. A dual-rank DIMM is similar to having two separate DIMMs on the same module. Although only a single DIMM module, a dual-rank DIMM acts as if it were two separate DIMMs. The primary reason for the existence of dual-rank DIMMs is to provide the largest capacity DIMM given the current DIMM technology. If the maximum DIMM technology allows for creating 2-GB single-rank DIMMs, a dual-rank DIMM using the same technology would be 4-GB. Understanding the existence of single-rank and dual-rank DIMMs is all that is necessary for understanding the memory population guidelines of this server.

> **NOTE:** The Advanced Memory Protection option in RBSU provides additional memory protection beyond Advanced ECC. By default, the server is set to **Advanced ECC Support**. Refer to "ROM-Based Setup Utility ("HP ROM-Based Setup Utility" on page 103)," on the Documentation CD, for more information.

The server supports two types of memory configurations with single-rank memory DIMMs:

- Standard memory configuration for maximum performance with up to 12 GB of active memory (six 2-GB single rank memory modules)
- Online spare memory configuration for maximum availability with up to 8 GB of active memory and 4 GB of online spare memory

The server only supports Advanced ECC with dual-rank DIMMs installed. Online Spare is not supported by dual-rank DIMMs. Early DL380G4 ROMs do not support dual-rank DIMMs. Besure you upgrade your ROM before installing dual-rank DIMMs.

- Standard memory configuration for maximum performance with up to 8 GB of active memory (four 2-GB dual-rank memory DIMMs)

For more information on single-rank and dual-rank DIMM configurations, see "DIMM Configuration Requirements (on page 57)."

DIMM Configuration Requirements

The following configuration requirements apply to single-rank and dual-rank DIMMs:

- Install only PC2-3200 Registered DDR-2 SDRAM DIMMs, 1.8 volts, 72 bits wide, and ECC.
- DIMMs must be installed in pairs.
- DIMM pairs in a memory bank must have the same HP part numbers.
- Always populate the DIMMs in sequential order per bank: Bank A, Bank B,and then Bank C.
- Dual-rank DIMMs must be populated before single-rank DIMMs (see table below).
- If dual-rank DIMMs are installed in Bank A and Bank B, no additional DIMMs may be installed in Bank C (see table below).
- The following table lists all seven (7) valid combinations of single-rank and dual-rank DIMM configurations. "Single" indicates a bank of single-rank DIMMs. "Dual" indicates a bank of dual-rank DIMMs. An invalid configuration will result in all DIMM failure LEDs lit and the system will hang. If dual-rank DIMMs are installed, online spare memory is not supported. Note that a bank contains 2 DIMMs.

Configuration	Bank A	Bank B	Bank C	Notes
1	Single			
2	Single	Single		
3	Single	Single	Single	
4	Dual			Online Spare not supported
5	Dual	Single		Online Spare not supported
6	Dual	Single	Single	Online Spare not supported
7	Dual	Dual		Online Spare not supported

- The memory configurations, including Advanced ECC or Online Spare, can be configured in RBSU. RBSU displays a warning message if the selected AMP mode is not supported by the current configuration. However, if the DIMM configuration at POST does not meet the requirements for the AMP mode selected in RBSU, the server defaults to Advanced ECC. The system indicates this by displaying a message during POST.
- If your server contains more than 4 GB of memory, consult your operating system documentation about accessing the full amount of installed memory.

Online Spare Memory Configuration

In the online spare configuration, the ROM automatically configures the last populated bank as the spare memory. If only banks A and B are populated, bank B is the spare bank. If banks A, B, and C are populated, bank C is the spare bank. If DIMMs in a non-spare bank exceed the limit for the single-bit correctable errors threshold as defined by the Pre-Failure Warranty, the system copies the memory contents of the failing bank to the spare bank. The system then deactivates the failing bank and automatically switches over to the spare bank.

For online spare memory support, you must observe the following guidelines:

- Dual-rank DIMMs can not be installed in any DIMM socket with online spare memory enabled.
- The ROM must be up to date.
- DIMMs installed in a spare bank must be of equal or greater capacity than the DIMMs installed in other banks.

  For example, if bank A is populated with two 256-MB DIMMs and bank B is populated with two 512-MB DIMMs, bank C must be populated with two 512-MB or greater DIMMs in order for online spare memory support to function properly.

After installing DIMMs, use RBSU to configure the system for online spare memory support ("Configuring Online Spare Memory" on page 105).

Installing DIMMs

1. Power down the server ("Powering Down the Server" on page 33).
2. Extend the server from the rack, if applicable ("Extending the Server from the Rack" on page 35).
3. Remove the access panel ("Removing the Access Panel" on page 36).
4. Open the DIMM slot latches.
5. Install the DIMM.

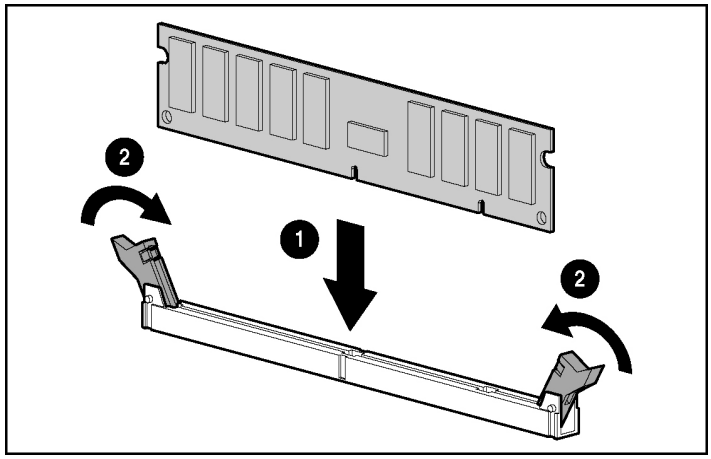

6. Install the access panel ("Installing the Access Panel" on page 37).
7. If you are installing DIMMs in an online spare configuration, use RBSU to configure this feature ("Configuring Online Spare Memory" on page 105).

Hot-Plug SCSI Hard Drive Options

When adding SCSI hard drives to the server, observe the following general guidelines:

- A maximum of 14 SCSI devices per channel can be added.
- Each SCSI drive must have a unique ID. The system automatically sets all SCSI IDs.

- The SCSI ID for each hot-plug hard drive is set automatically to the next sequential ID number in a series beginning with ID0.
- If only one SCSI hard drive is used, install it in the bay with the lowest number.
- Hot-plug hard drives must be either Wide Ultra2, Ultra3, or Ultra320 SCSI types. Mixing these types with other drive standards degrades the overall performance of the drive subsystem.
- Drives must be the same capacity to provide the greatest storage space efficiency when drives are grouped together into the same drive array.

SCSI IDs

The server supports single- or dual-channel hard drive configurations. The single-channel configuration (simplex) supports up to six hard drives on one channel. The dual-channel configuration (duplex) supports two hard drives on one channel (SCSI IDs 0 and 1) and up to four hard drives on the other channel (SCSI IDs 2 through 5).

The SCSI IDs for both simplex and duplex configurations are illustrated. Always populate hard drive bays starting with the lowest SCSI ID.

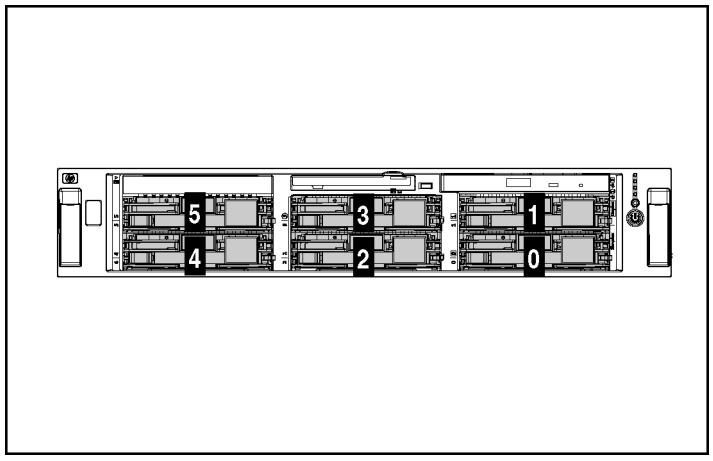

Removing a Hard Drive Blank

CAUTION: To prevent improper cooling and thermal damage, do not operate the server unless all bays are populated with either a component or a blank.

NOTE: The server ships standard with five hard drive blanks.

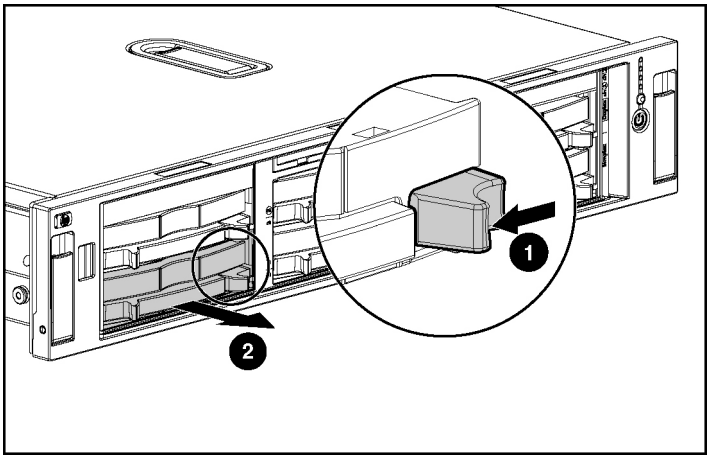

Installing a Hot-Plug SCSI Hard Drive

1. Remove the existing hard drive blank or hard drive from the drive bay ("Removing a Hot-Plug SCSI Hard Drive" on page 62).

2. Install the hard drive.

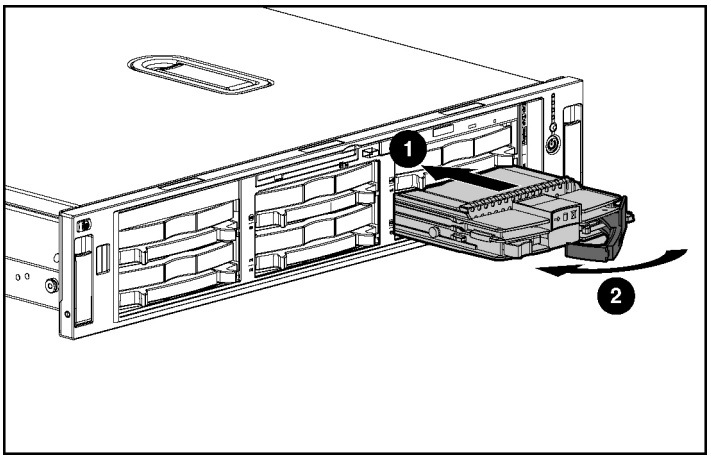

3. Determine the status of the hard drive from the hot-plug hard drive LEDs ("Hot-Plug SCSI Hard Drive LED Combinations" on page 25, "Hot-Plug SCSI Hard Drive LEDs" on page 24).
4. Resume normal server operations.

Removing a Hot-Plug SCSI Hard Drive

CAUTION: To prevent improper cooling and thermal damage, do not operate the server unless all bays are populated with either a component or a blank.

1. Determine the status of the hard drive from the hot-plug hard drive LEDs ("Hot-Plug SCSI Hard Drive LED Combinations" on page 25, "Hot-Plug SCSI Hard Drive LEDs" on page 24).
2. Back up all server data on the hard drive.

3. Remove the hard drive.

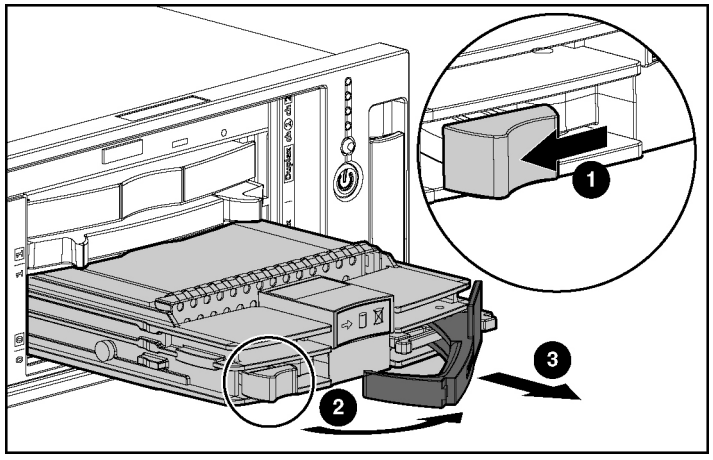

Installing a Diskette Drive

1. Power down the server ("Powering Down the Server" on page 33).
2. Extend the server from the rack, if applicable ("Extending the Server from the Rack" on page 35).
3. Remove the access panel ("Removing the Access Panel" on page 36).

4. Remove the protective cover on the server bezel from the front of the diskette drive bay.

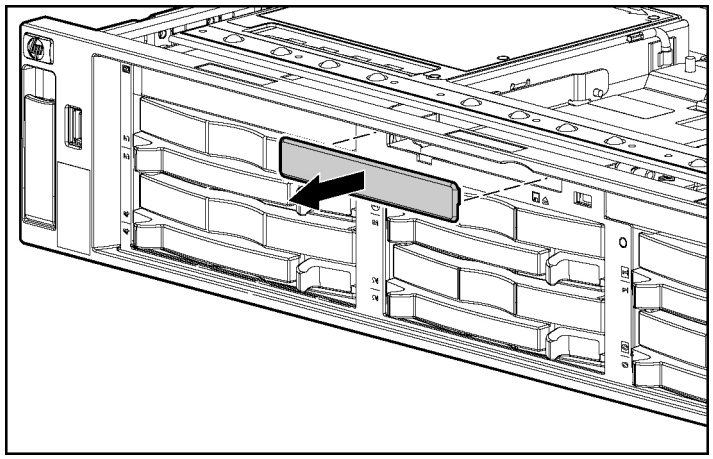

5. Slide the diskette drive into the diskette drive bay.
6. Tighten the thumbscrew.
7. Secure the diskette drive cable to the diskette drive cable connector on the SCSI backplane board.

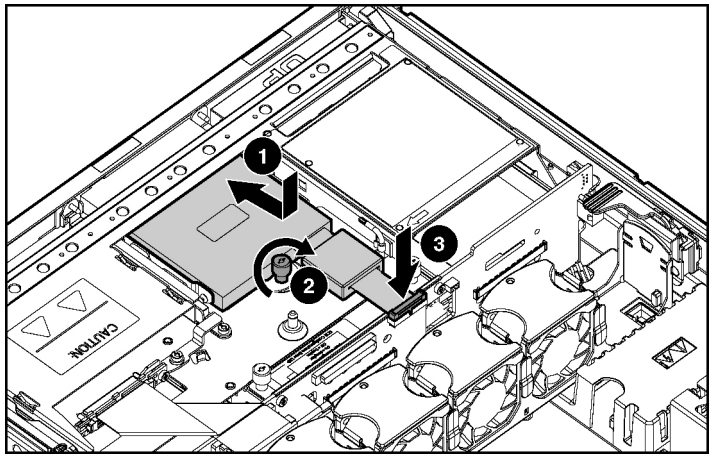

Hot-Plug Tape Drive Option

1. Remove the existing hard drive blank or hard drive from the upper-left drive bay ("Removing a Hot-Plug SCSI Hard Drive" on page 62).
2. Reach underneath and squeeze the middle of the tape drive blank (1).
3. Pull the blank out of the bay (2).

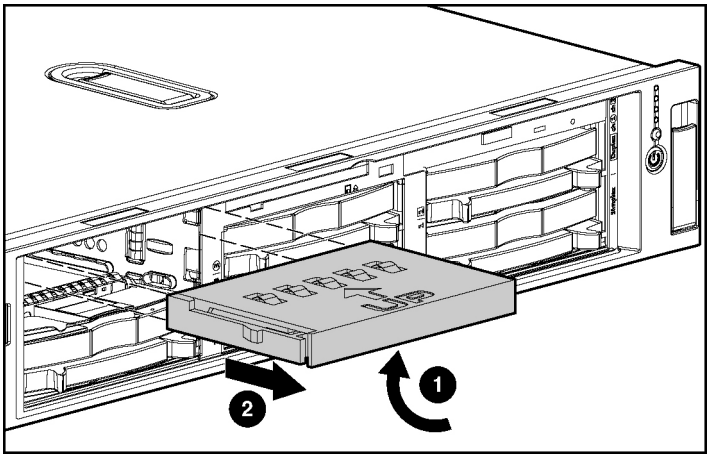

4. Install the tape drive.

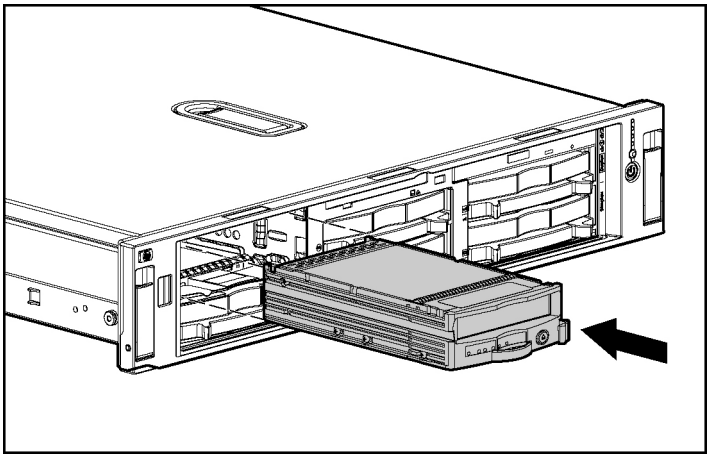

Redundant Hot-Plug Fans

In the standard configuration, five fans cool the server: fans 2, 4, 5, 6, and 7.

For the redundant configuration, fans 1, 3, and 8 are added to cool the server. This allows the server to continue operation in non-redundant mode if any one fan fails.

The server supports variable fan speeds to allow the speed of all fans to increase if the temperature in any area increases. The fans will run at minimum speed until a temperature change requires a fan speed increase to cool the server.

The server shuts down in the following scenarios:

- At POST:
  - The BIOS suspends the server for 5 minutes if it detects a cautionary temperature level. If the cautionary temperature level is still detected after 5 minutes, the BIOS performs an orderly shutdown and then restarts. This process repeats until the cautionary temperature level is no longer detected.
  - The BIOS performs an orderly shutdown if the following minimum requirements are not met: a minimum of five fans in the standard configuration or seven fans in the redundant configuration.
  - The server performs an immediate shutdown if it detects a critical temperature level.

    IMPORTANT: An immediate shutdown is a hardware-controlled function and it overrides any firmware or software actions.
- In the operating system:
  - With the Health Driver loaded and Thermal Shutdown enabled in RBSU, the Health Driver performs an orderly shutdown if it detects a cautionary temperature level. If the server detects a critical temperature level before the orderly shutdown occurs, the server performs an immediate shutdown. Additionally, the Health Driver performs an orderly shutdown if the following minimum requirements are not met: a minimum of five fans in the standard configuration or seven fans in the redundant configuration.

– With the Health Driver loaded and Thermal Shutdown disabled in RBSU, the server performs an immediate shutdown if it detects a critical temperature level.

– Without the Health Driver loaded, the server performs an immediate shutdown if it detects a critical temperature level.

IMPORTANT: An immediate shutdown is a hardware-controlled function and it overrides any firmware or software actions.

Installation Requirements



WARNING: To reduce the risk of electric shock, personal injury, and damage to the equipment:

- **Do not attempt to service any parts of the equipment other than those specified in the following procedure. Any other activities may require that you shut down the server and remove the power cord.**
- **Installation and maintenance of this product must be performed by individuals who are knowledgeable about the procedures, precautions and hazards associated with the product.**

You must observe the following requirements when installing redundant hot-plug fans:

- To ensure optimum cooling, populate the primary fan locations, 2, 4, 5, 6, and 7, before populating the redundant locations.
- If a primary fan fails, replace the nonfunctioning fan before installing fans in redundant locations.

Identifying Hot-Plug Fans

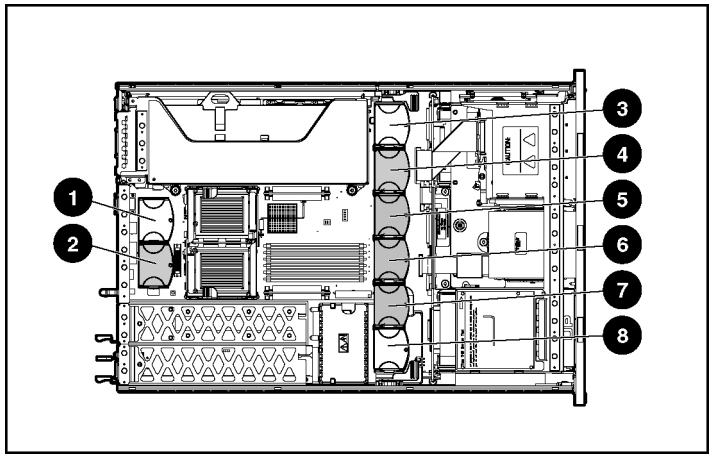

Item	Description	Configuration
1	Fan 1	Redundant
2	Fan 2	Primary
3	Fan 3	Redundant
4	Fan 4	Primary
5	Fan 5	Primary
6	Fan 6	Primary
7	Fan 7	Primary
8	Fan 8	Redundant

Installing Redundant Hot-Plug Fans

1. Extend the server from the rack, if applicable ("Extending the Server from the Rack" on page 35).
2. Remove the access panel ("Removing the Access Panel" on page 36).

WARNING: The potential for personal injury exists if a hot surface is contacted. Use caution while performing hot-plug procedures.

3. Install the fan.

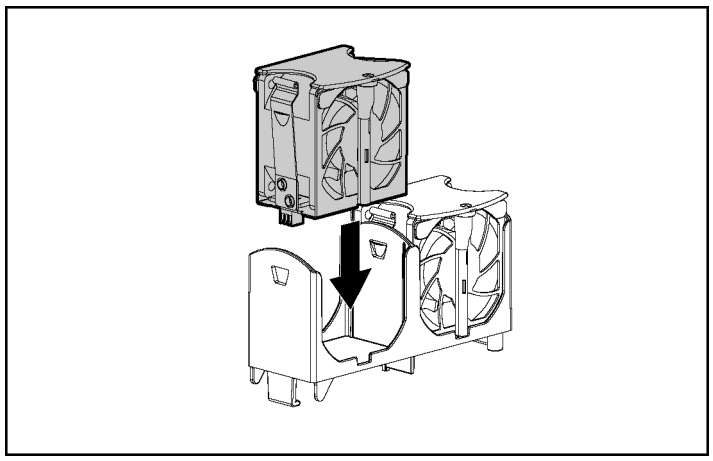

4. Be sure that the fan LED is green ("Hot-Plug Fan LED" on page 30).
5. Install the access panel ("Installing the Access Panel" on page 37).
6. Be sure that the front panel internal health LED is green ("Front Panel LEDs and Buttons" on page 11).

Front Fan Bracket

To remove the component:

1. Power down the server ("Powering Down the Server" on page 33).
2. Extend or remove the server from the rack ("Extending the Server from the Rack" on page 35).
3. Remove the access panel ("Removing the Access Panel" on page 36).

4. Remove the front fan bracket.

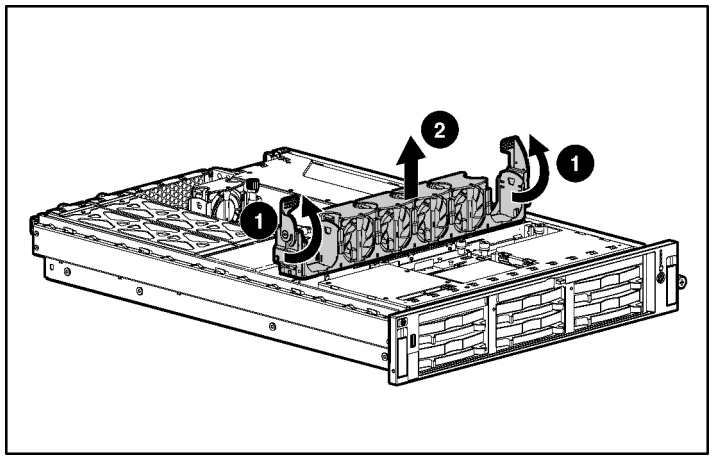

5. Remove all hot-plug fans from the front fan bracket.

To replace the front fan bracket, reverse the removal steps and press down on the top of each fan to be sure it is seated properly.

Battery-Backed Write Cache Option

Along with the cache module, the battery pack provides transportable data protection, increases overall controller performance, and maintains any cached data for up to 72 hours. The NiMH batteries in the battery pack are continuously recharged through a trickle-charging process whenever the system power is on.

For information on BBWC LEDs, refer to "Battery-Backed Write Cache LEDs (on page 31)" and "Battery-Backed Write Cache LED Statuses (on page 32)."

CAUTION: To prevent a server malfunction or damage to the equipment, do not add or remove the battery pack while an array capacity expansion, RAID level migration, or stripe size migration is in progress.



CAUTION: After the server is powered down, wait 15 seconds and then check the amber LED before unplugging the cable from the cache module. If the amber LED blinks after 15 seconds, do not remove the cable from the cache module. The cache module is backing up data, and data will be lost if the cable is detached.

IMPORTANT: The battery pack may have a low charge when installed. In this case, a POST error message is displayed when the server is powered up, indicating that the battery pack is temporarily disabled. No action is necessary on your part. The internal circuitry automatically recharges the batteries and enables the battery pack. This process may take up to 4 hours. During this time, the cache module will function properly, but without the performance advantage of the battery pack.

NOTE: The data protection and the time limit also apply if a power outage occurs. When power is restored to the system, an initialization process writes the preserved data to the hard drives.

To install the Battery-Backed Write Cache:

1. Power down the server ("Powering Down the Server" on page 33).
2. Extend the server from the rack, if applicable ("Extending the Server from the Rack" on page 35).
3. Remove the access panel ("Removing the Access Panel" on page 36).
4. Remove the front fan bracket ("Front Fan Bracket" on page 69).
5. Remove the PCI riser cage ("Removing the PCI Riser Cage" on page 76).

6. Connect the cable to the cache module and install the cache module.

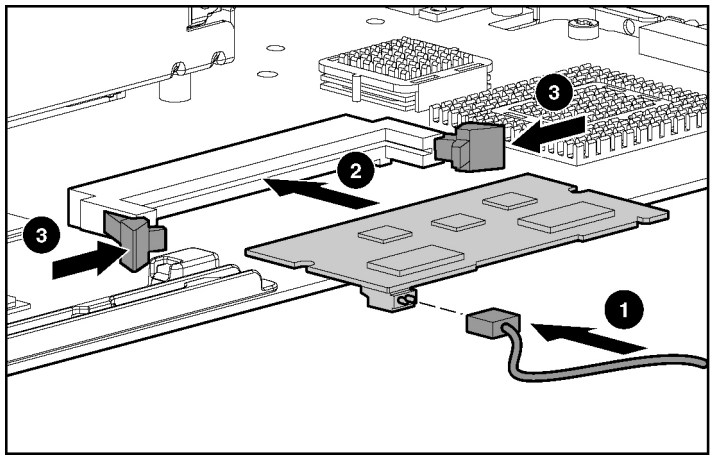

7. Route the cable along the system board.
8. Install the battery pack assembly into the server.

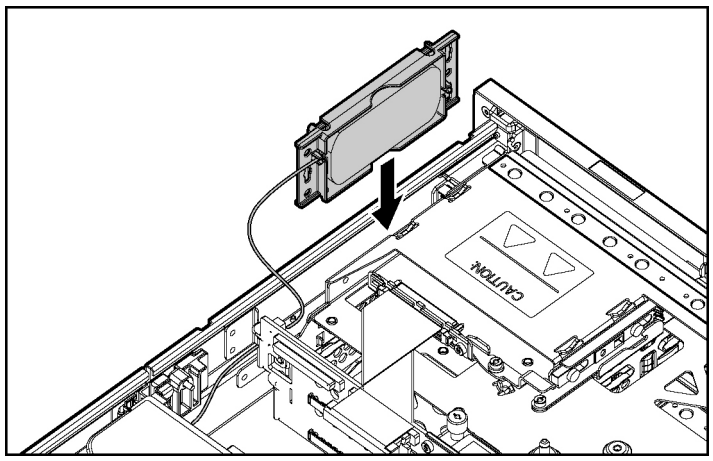

9. Install the PCI riser cage ("Installing the PCI Riser Cage" on page 75).
10. Install the front fan bracket ("Front Fan Bracket" on page 69).
11. Install the access panel ("Installing the Access Panel" on page 37).
12. Power up the server ("Powering Up the Server" on page 33).

Refer to the option documentation for more information.

Redundant Hot-Plug AC Power Supply Option

CAUTION: To prevent improper cooling and thermal damage, do not operate the server unless all bays are populated with either a component or a blank.

1. If the cable management arm assembly is installed on the left side of the rack rail, swing open the cable management arm. If the cable management arm assembly is installed on the right side of the rack rail, proceed to the next step.

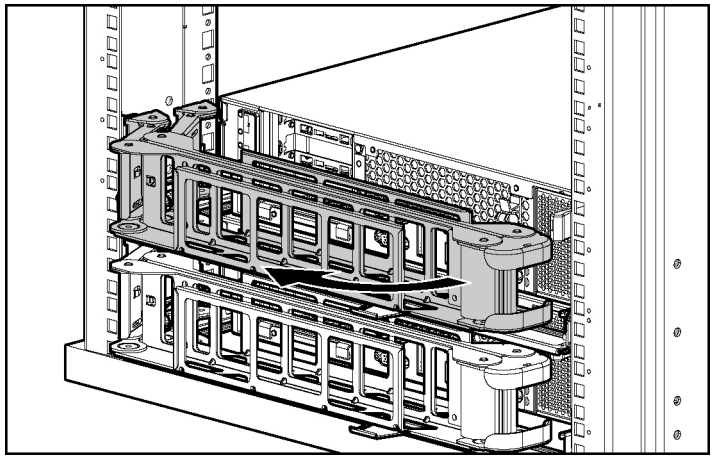

2. If the cable management arm assembly is installed on the right side of the rack rail, remove the cable management arm assembly.
   a. Power down the server.
   b. Swing open the cable management arm.
   c. Remove the cables from the cable trough.

d. Remove the cable management arm.

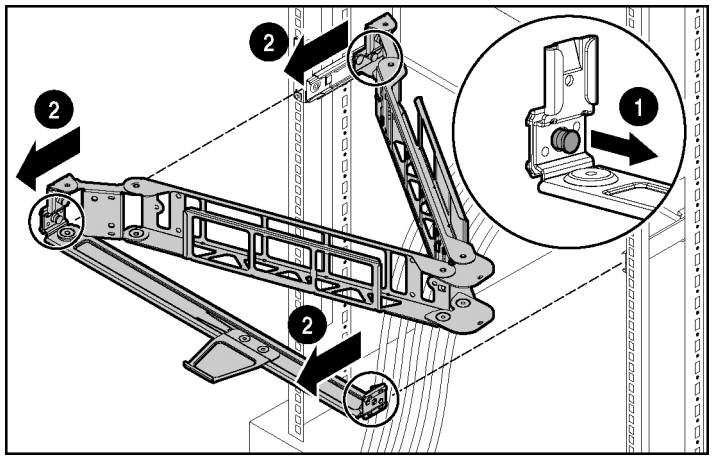

3. Remove the power supply blank.

WARNING: To reduce the risk of personal injury from hot surfaces, allow the power supply or power supply blank to cool before touching it.

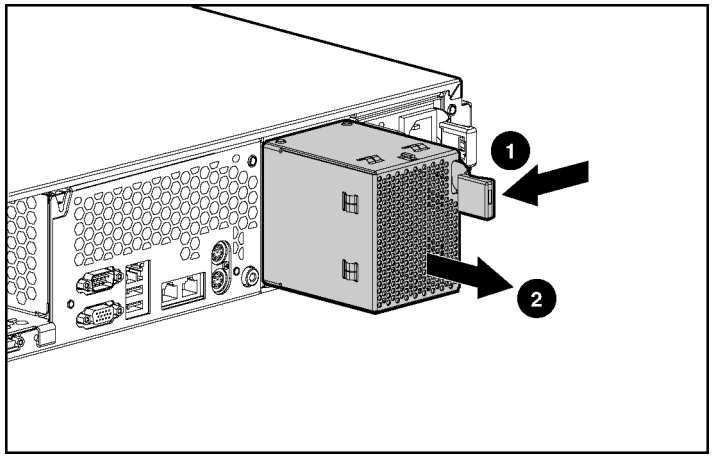

4. Slide the power supply into the power supply bay.
5. Connect the power cord to the power supply.

6. Route the power cord through the cable management arm or power cord anchor.

   NOTE: If using the power cord anchor, be sure to leave enough slack in the power cord so that the redundant power supply can be removed without disconnecting the power cord from the primary power supply.

7. Reposition the cable management arm into the operating position.
8. Connect the power cord to the power source.
9. Be sure that the power supply LED is green ("Rear Panel LEDs and Buttons" on page 14).
10. Be sure that the front panel external health LED is green ("Front Panel LEDs and Buttons" on page 11).

PCI Riser Cage Options

Installing the PCI Riser Cage

CAUTION: To prevent damage to the server or expansion boards, power down the server and remove all AC power cords before removing or installing the PCI riser cage.

1. Align the PCI riser cage with the chassis and slide it into place.

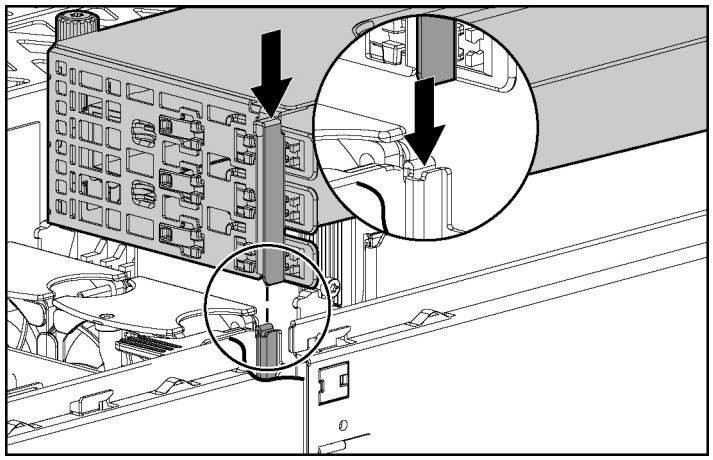

2. Tighten the thumbscrews to secure the PCI riser cage:
   a. Lift the thumbscrew knobs (1).
   b. Turn the thumbscrews clockwise while pressing down, until tightened (2).
   c. Turn the thumbscrews counterclockwise to lower thumbscrew knobs (3).

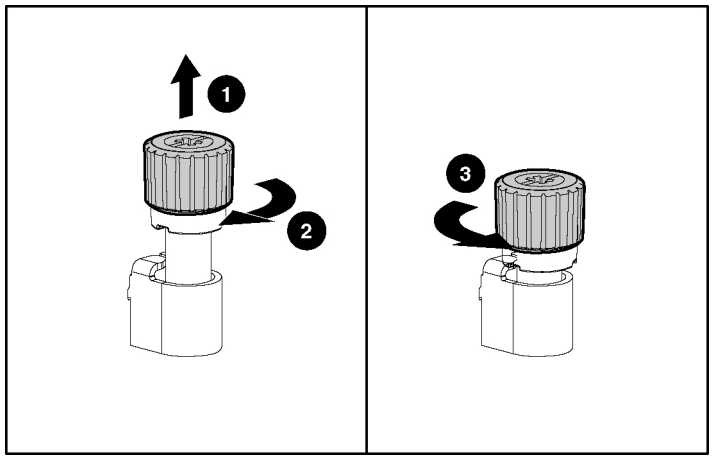

Removing the PCI Riser Cage

CAUTION: To prevent damage to the server or expansion boards, power down the server and remove all AC power cords before removing or installing the PCI riser cage.

1. Power down the server ("Powering Down the Server" on page 33).
2. Extend the server from the rack, if applicable ("Extending the Server from the Rack" on page 35).
3. Remove the access panel ("Removing the Access Panel" on page 36).
4. Disconnect any internal or external cables connected to any existing expansion boards.
5. Lift the PCI riser cage thumbscrews and turn them counter-clockwise.

6. Remove the PCI riser cage.

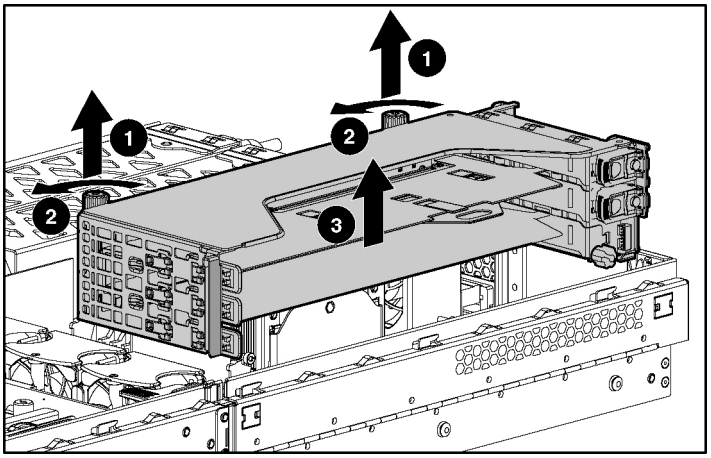

Expansion Board Options

The server supports PCI, PCI-X, and PCI Express expansion boards. PCI hot-plug capability is available on some expansion slots.

For instructions on installing a RILOE II board, refer to the *HP Remote Insight Lights-Out Edition II User Guide* on the Documentation CD.

IMPORTANT: It is recommended that the optional RILOE II board be installed in slot 1. If you plan to install a RILOE II board in the future, leave slot 1 unpopulated.

Removing Expansion Slot Cover 1

1. Power down the server ("Powering Down the Server" on page 33).
2. Extend or remove the server from the rack ("Extending the Server from the Rack" on page 35).
3. Remove the access panel ("Removing the Access Panel" on page 36).
4. Remove the PCI riser cage ("Removing the PCI Riser Cage" on page 76).

CAUTION: To prevent damage to the server or expansion boards, power down the server and remove all AC power cords before removing or installing the PCI riser cage.

5. Remove the expansion slot cover.

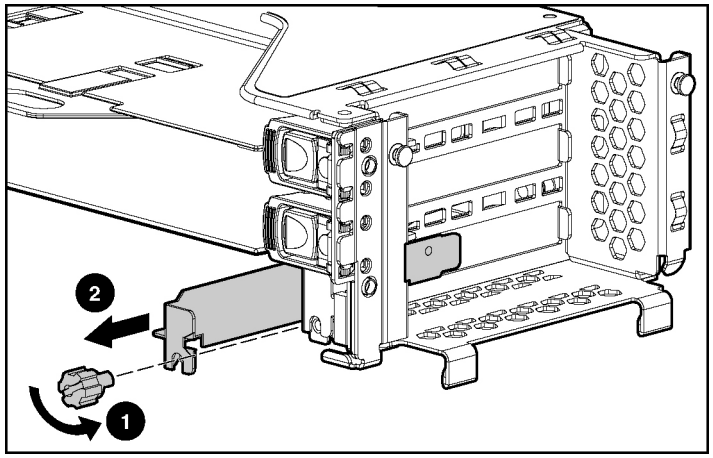

CAUTION: To prevent improper cooling and thermal damage, do not operate the server unless all PCI slots have either an expansion slot cover or an expansion board installed.

To replace the component, reverse the removal procedure.

Removing Expansion Slot Covers 2 and 3

1. Extend or remove the server from the rack ("Extending the Server from the Rack" on page 35).
2. Remove the access panel ("Removing the Access Panel" on page 36).
3. Open the PCI riser cage door.

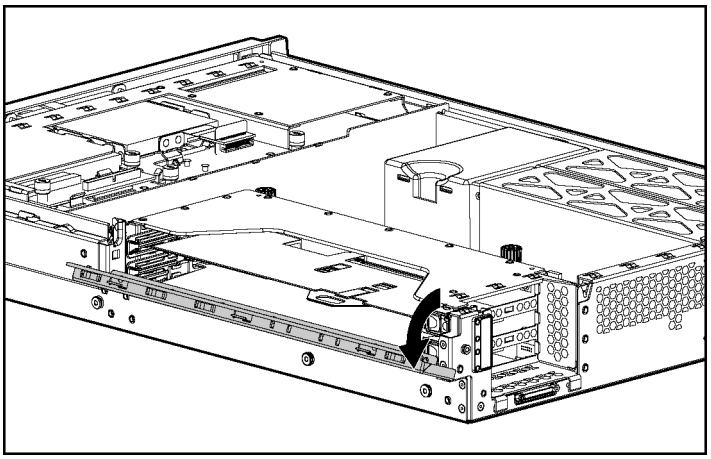

CAUTION: To prevent improper cooling and thermal damage, do not operate the server unless all PCI slots have either an expansion slot cover or an expansion board installed.

4. Remove the expansion slot cover.

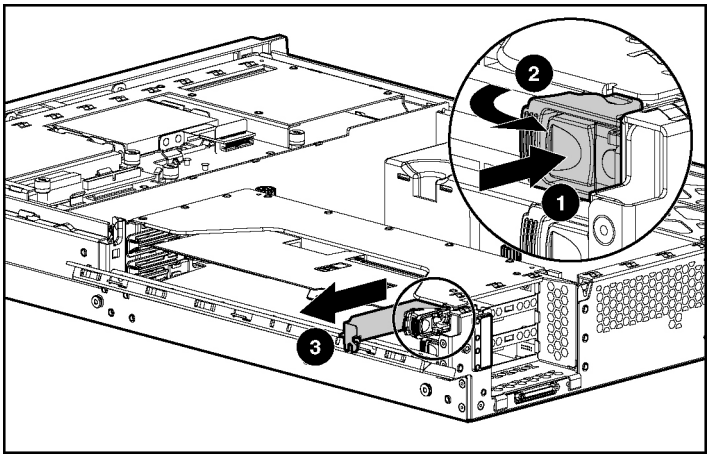

To replace the component, reverse the removal procedure.

Installing a Non-Hot-Plug Expansion Board

1. Power down the server ("Powering Down the Server" on page 33).

2. Extend the server from the rack, if applicable ("Extending the Server from the Rack" on page 35).
3. Remove the access panel ("Removing the Access Panel" on page 36).
4. Remove the PCI riser cage ("Removing the PCI Riser Cage" on page 76).

CAUTION: To prevent damage to the server or expansion boards, power down the server and remove all AC power cords before removing or installing the PCI riser cage.

5. Remove the expansion slot cover for expansion slot 1 ("Removing Expansion Slot Cover 1" on page 77).
6. Unlock the PCI retaining clip.

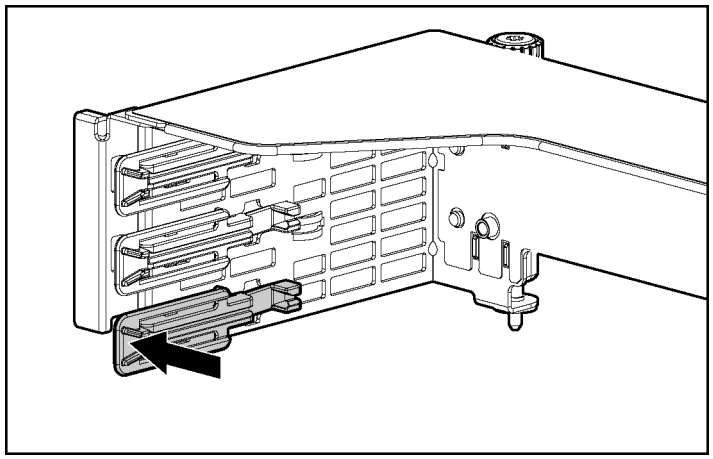

7. Install the expansion board.

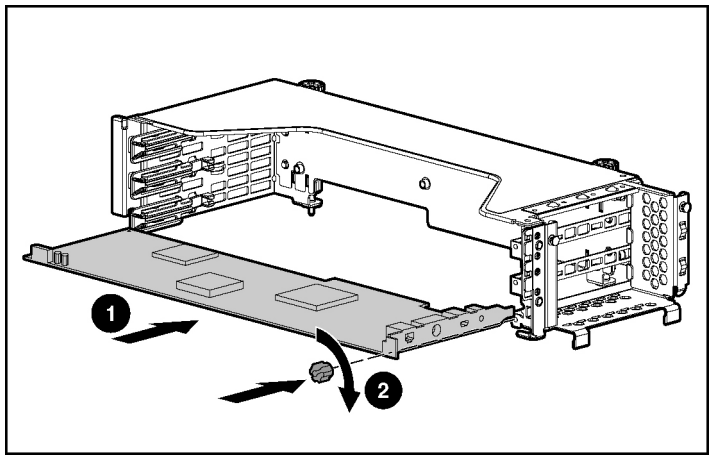

8. Lock the PCI retaining clip.
9. Install the PCI riser cage ("Installing the PCI Riser Cage" on page 75).
10. Connect any required internal or external cables to the expansion board. Refer to the documentation that ships with the expansion board.
11. Close the PCI riser cage door.
12. Install the access panel ("Installing the Access Panel" on page 37).

Installing PCI Hot Plug Expansion Boards

The server supports PCI Hot Plug technology, which works together with the server operating system to allow replacement, addition, and upgrade of expansion boards without powering down the server.

The server must have all the following to be PCI Hot Plug-capable:

- PCI Hot Plug system hardware (available in this server)
- PCI Hot Plug device drivers installed from the SmartStart CD
- Operating system with PCI Hot Plug support

For more information, refer to the *PCI Hot Plug Administration Guide* on the Documentation CD.

To install a hot-plug expansion board:

1. Extend the server from the rack, if applicable ("Extending the Server from the Rack" on page 35).
2. Remove the access panel ("Removing the Access Panel" on page 36).
3. Open the PCI riser cage door.

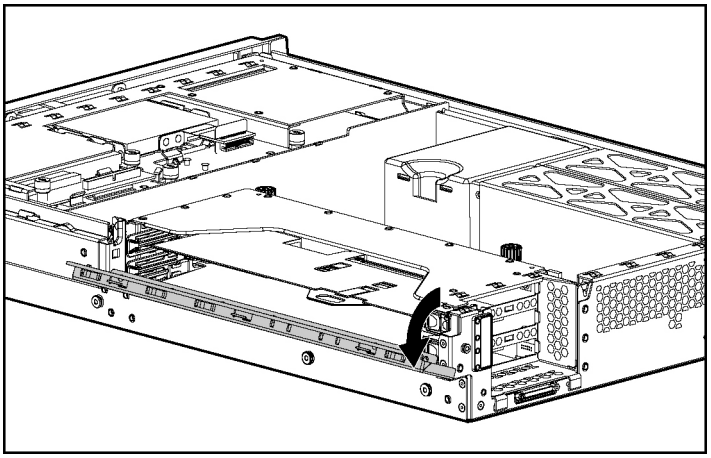

4. Press the PCI Hot Plug button to remove power from the slot. When the green power LED on the slot stops flashing, power has been removed from the slot.
5. Remove the expansion slot cover from the slot, if installed ("Removing Expansion Slot Covers 2 and 3" on page 78).

6. Unlock the PCI retaining clip.

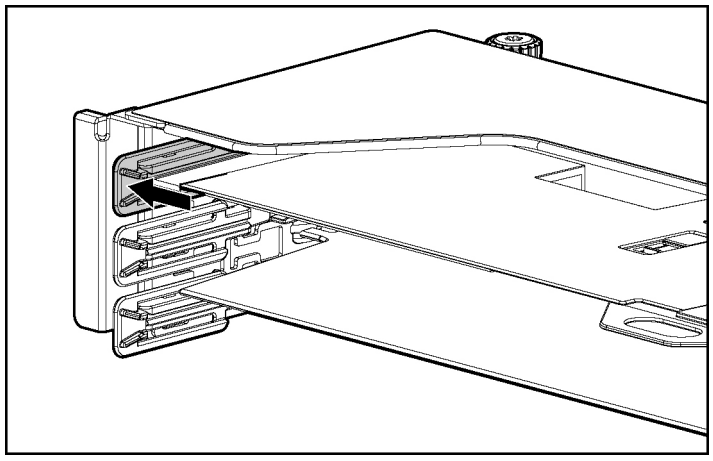

7. Install the expansion board.

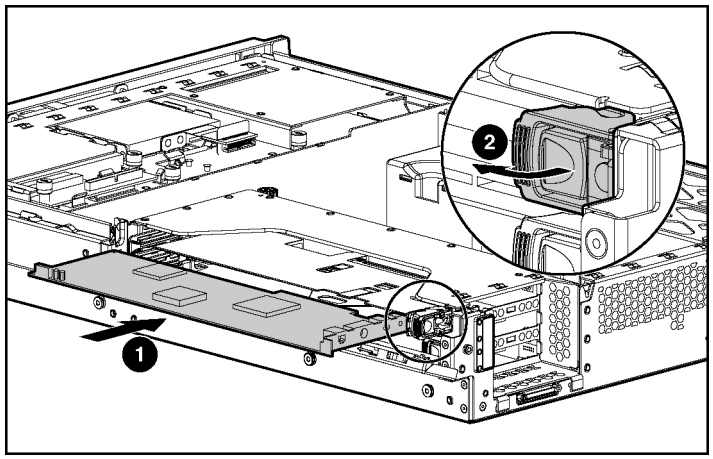

8. Lock the PCI retaining clip.
9. Connect any required internal or external cables to the expansion board. Refer to the documentation that ships with the expansion board.
10. Close the slot release lever.
11. Press the PCI Hot Plug button and wait for the power LED to illuminate green without flashing.

12. Close the PCI riser cage door.
13. Install the access panel ("Installing the Access Panel" on page 37).

Server Cabling

In This Section

Cabling 85
Hot-Plug SCSI Hard Drive Cabling 85
USB Cabling 93
DVD/CD-ROM Drive Cabling 94
Diskette Drive Cabling 94
Power Button/LED Cabling 95
Optional PCI Hot Plug Backplane Cabling 96
RILOE II Cabling 97
Internal Power Cabling 97
External Storage Cabling 98

Cabling

This section provides guidelines that help you make informed decisions about cabling the server and hardware options to optimize performance.

For information on cabling the optional RILOE II board, refer to the *HP Remote Insight Lights-Out Edition II User Guide* on the Documentation CD.

For information on cabling peripheral components, refer to the white paper on high-density deployment in HP or Compaq branded racks on the HP website (http://www.hp.com).

Hot-Plug SCSI Hard Drive Cabling

IMPORTANT: If a simplex or duplex cabling configuration is not cabled correctly, the SCSI configuration error LED will illuminate. Refer to "SCSI Backplane LEDs (on page 23)" to locate the LED.

NOTE: The server ships with two identical short SCSI cables. Two optional long SCSI cables may be obtained for PCI Array Controllers. One optional terminator board may be obtained to support duplex SCSI configurations.

The simplex/duplex SCSI backplane supports six cabling configurations, including:

- Embedded simplex
- Embedded duplex
- PCI simplex
- PCI duplex
- Mixed duplex (two configuration options)

Embedded Simplex SCSI Cabling

In the embedded simplex cabling configuration, the embedded Smart Array 6i Controller controls up to six hard drives through one SCSI bus. The server ships standard with this configuration.

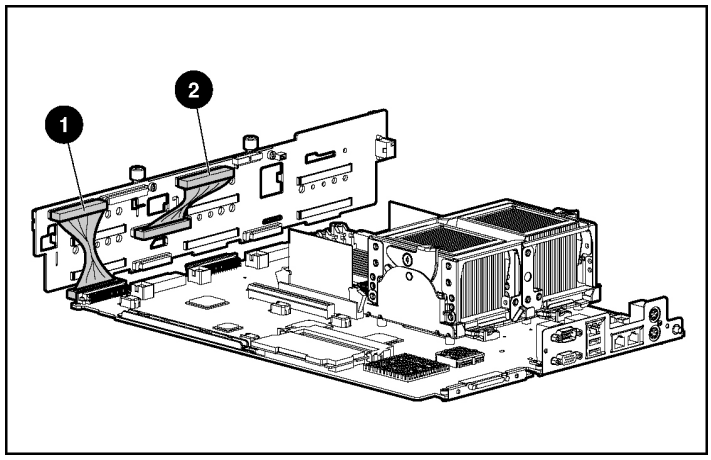

NOTE: The short SCSI cables are identical.

Item	Component description	SCSI IDs managed
1	Short SCSI cable	0, 1, 2, 3, 4, 5
2	Short SCSI cable used to jumper the two SCSI buses together	N/A

Embedded Duplex SCSI Cabling

In the embedded duplex cabling configuration, the embedded Smart Array 6i Controller controls up to six hard drives through two SCSI buses: one bus with up to two drives and the other bus with up to four drives.

NOTE: This specific cabling configuration does not support external VHDCI.

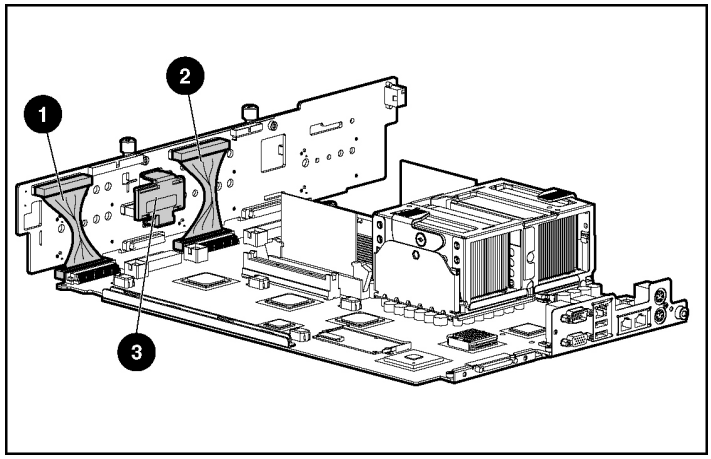

NOTE: Optional SCSI terminator board and optional long SCSI cables are available in the SCSI Configuration Option Kit.

NOTE: The short SCSI cables are identical.

Item	Component description	SCSI IDs managed
1	Short SCSI cable	0, 1
2	Short SCSI cable	2, 3, 4, 5
3	Optional terminator board	N/A

Refer to "Installing the SCSI Terminator Board (on page 91)" for SCSI terminator board installation procedures.

PCI Simplex SCSI Cabling

In the PCI simplex cabling configuration, an optional PCI array controller controls up to six hard drives through one SCSI bus.

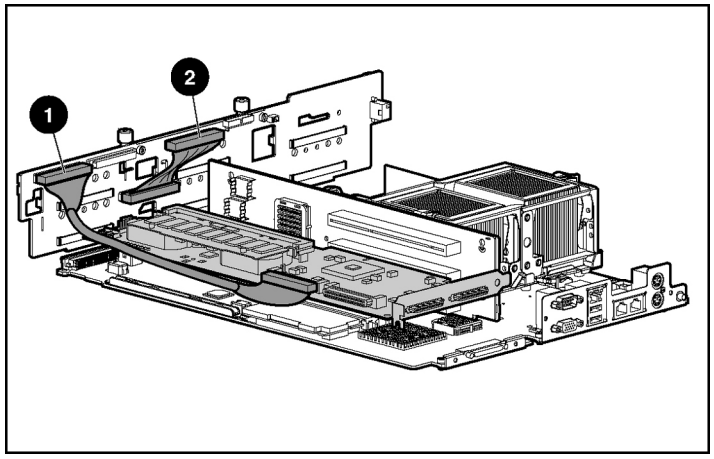

NOTE: Optional SCSI terminator board and optional long SCSI cables are available in the SCSI Configuration Option Kit.

Item	Component description	SCSI IDs managed
1	Optional long SCSI cable	0, 1, 2, 3, 4, 5
2	Short SCSI cable used to jumper the two SCSI buses together	N/A

PCI Duplex SCSI Cabling

In the PCI duplex cabling configuration, an optional PCI array controller controls up to six hard drives through two SCSI buses: one bus with up to two drives and one bus with up to four drives.

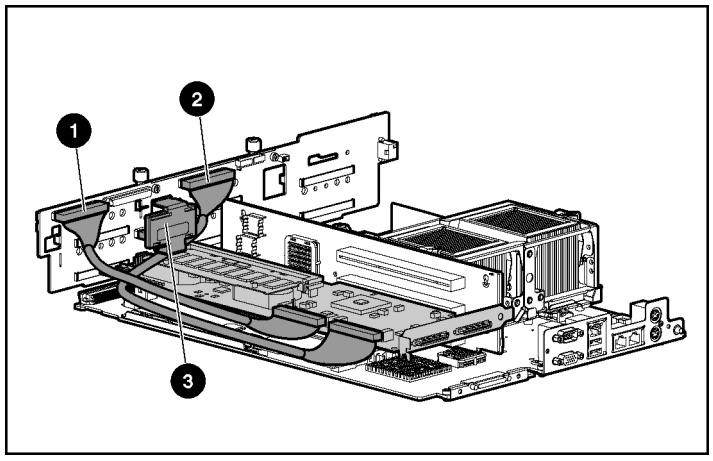

NOTE: Optional SCSI terminator board and optional long SCSI cables are available in the SCSI Configuration Option Kit.

Item	Component description	SCSI IDs managed
1	Optional long SCSI cable	0, 1
2	Optional long SCSI cable	2, 3, 4, 5
3	Optional terminator board	N/A

Refer to "Installing the SCSI Terminator Board (on page 91)" for SCSI terminator board installation procedures.

Mixed Duplex SCSI Cabling

In the mixed duplex SCSI cabling configuration, an optional PCI array controller controls up to six hard drives through two SCSI buses: one bus with up to two drives and one bus with up to four drives. Two configuration options are available for mixed duplex SCSI cabling.

NOTE: This specific cabling configuration does not support external VHDCI.

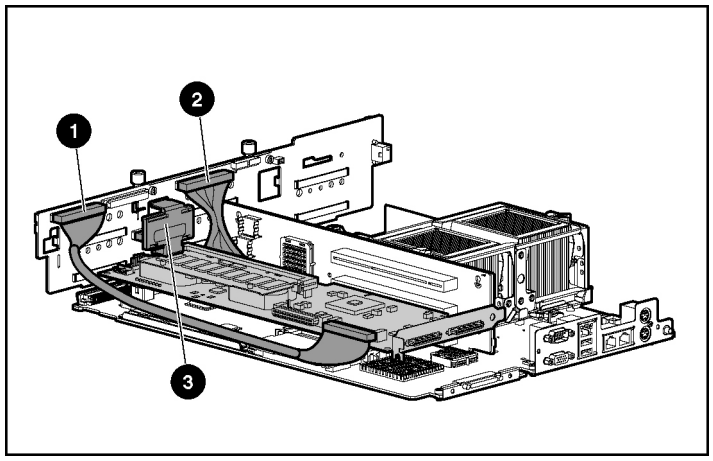

NOTE: Optional SCSI terminator board and optional long SCSI cables are available in the SCSI Configuration Option Kit.

Item	Component description	SCSI IDs managed
1	Optional long SCSI cable	0, 1
2	Short SCSI cable	2, 3, 4, 5
3	Optional terminator board	N/A

NOTE: This specific cabling configuration supports external VHDCI.

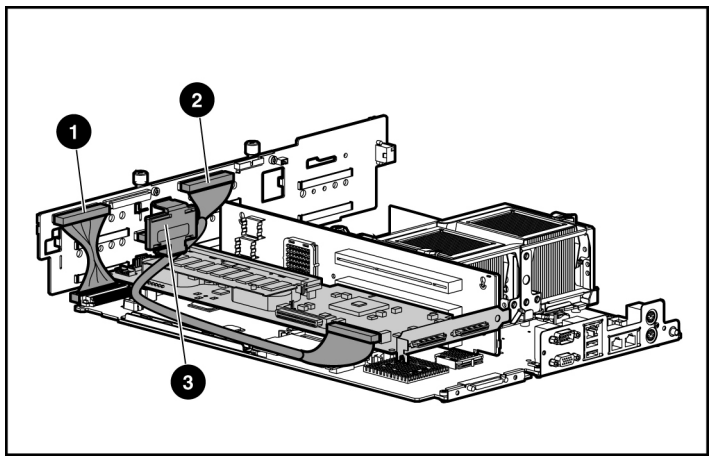

NOTE: Optional SCSI terminator board and optional long SCSI cables are available in the SCSI Configuration Option Kit.

Item	Component description	SCSI IDs managed
1	Short SCSI cable	0, 1
2	Optional long SCSI cable	2, 3, 4, 5
3	Optional terminator board	N/A

Installing the SCSI Terminator Board

1. Power down the server ("Powering Down the Server" on page 33).
2. Extend or remove the server from the rack ("Extending the Server from the Rack" on page 35).
3. Remove the access panel ("Removing the Access Panel" on page 36).
4. Remove the front fan bracket ("Front Fan Bracket" on page 69).

   IMPORTANT: For this procedure, you do not need to remove the hot-plug fans from the front fan bracket. When reinstalling the front fan bracket, press the top of each fan to be sure it seats securely.

   NOTE: For more information on preparing the server for installation or removal procedures, refer to the Documentation CD.

5. Install the SCSI terminator board.

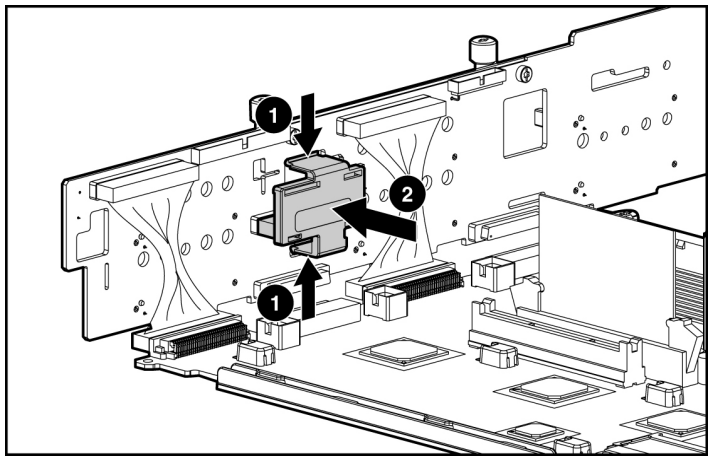

Removing the SCSI Terminator Board

1. Power down the server ("Powering Down the Server" on page 33).
2. Extend or remove the server from the rack ("Extending the Server from the Rack" on page 35).
3. Remove the access panel ("Removing the Access Panel" on page 36).
4. Remove the front fan bracket ("Front Fan Bracket" on page 69).

IMPORTANT: For this procedure, you do not need to remove the hot-plug fans from the front fan bracket. When reinstalling the front fan bracket, press the top of each fan to be sure it seats securely.

NOTE: For more information on preparing the server for installation or removal procedures, refer to the Documentation CD.

5. Remove the SCSI terminator board.

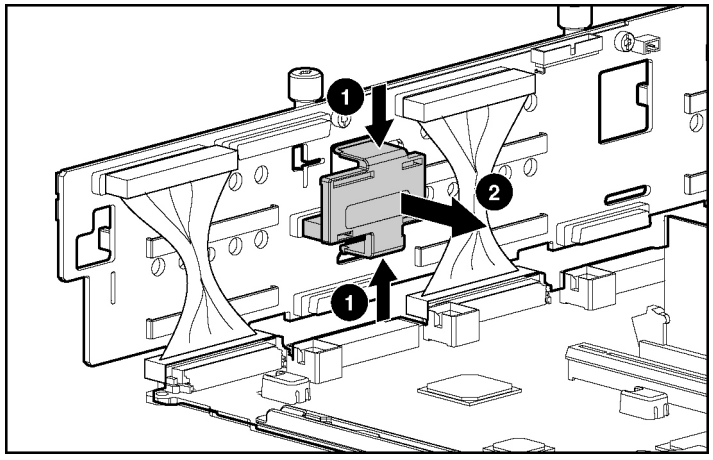

USB Cabling

The USB cable connects the front panel USB connector to the SCSI backplane.

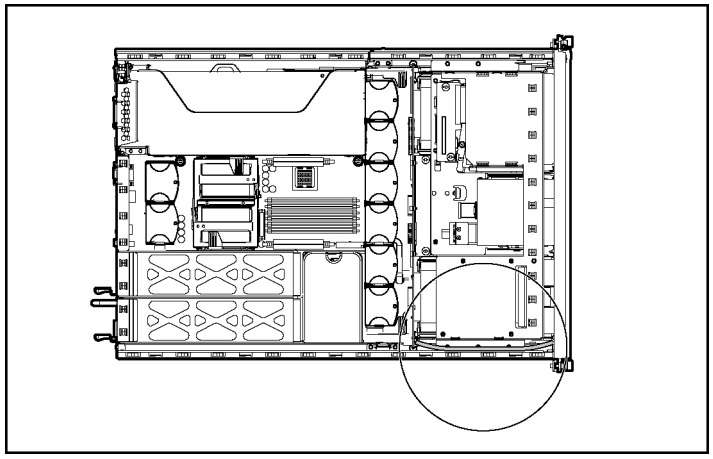

DVD/CD-ROM Drive Cabling

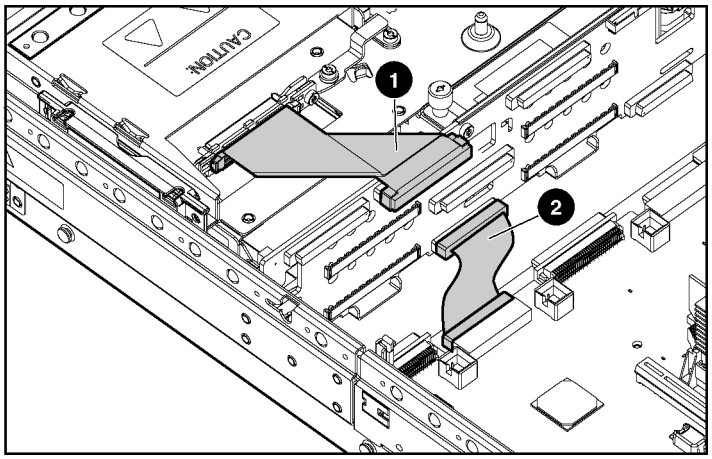

Item	Cable Description
1	DVD/CD-ROM drive cable
2	DVD/CD-ROM drive system cable

Diskette Drive Cabling

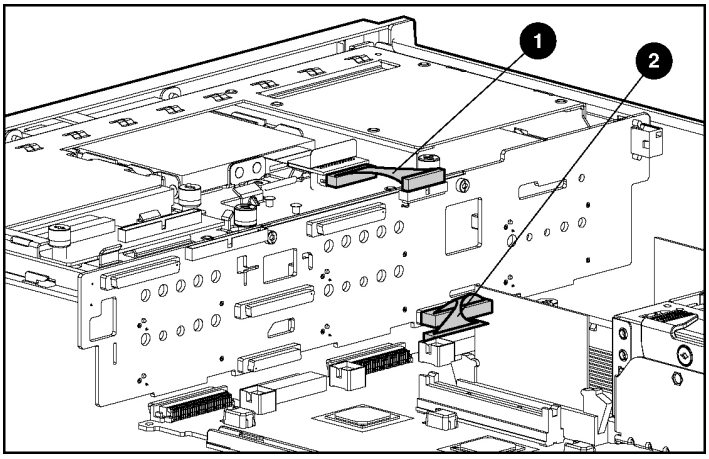

Item	Cable Description
1	Diskette drive cable
2	Diskette drive system cable

Power Button/LED Cabling

The power button/LED cable connects the power button/LED board to the SCSI backplane.

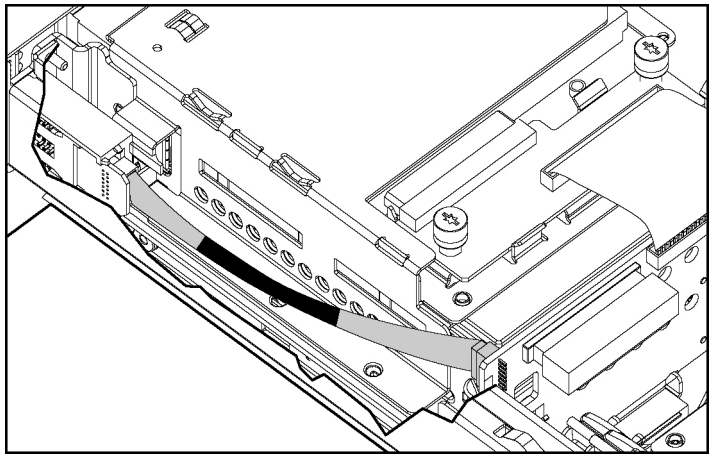

Optional PCI Hot Plug Backplane Cabling

The server contains a PCI Hot Plug backplane that is part of the PCI Hot Plug option and provides hot-plug capability for two expansion slots. A ribbon cable connects the PCI Hot Plug backplane to the riser board.

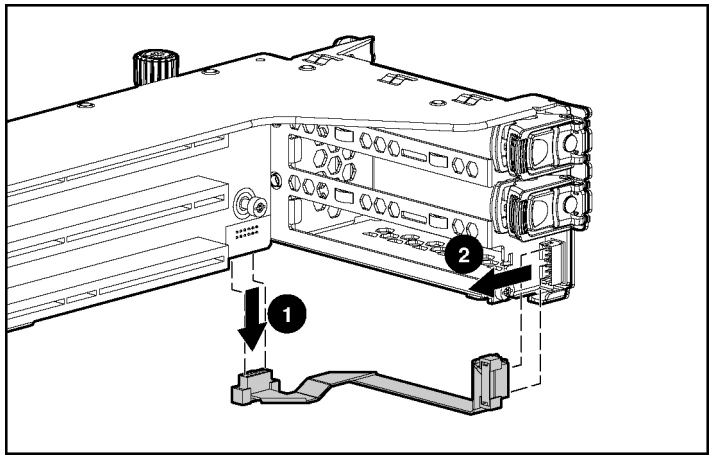

RILOE II Cabling

The 30-pin Remote Insight cable ships with the RILOE II cable kit. For more information, refer to the *Remote Insight Lights-Out Edition II User Guide* on the Documentation CD.

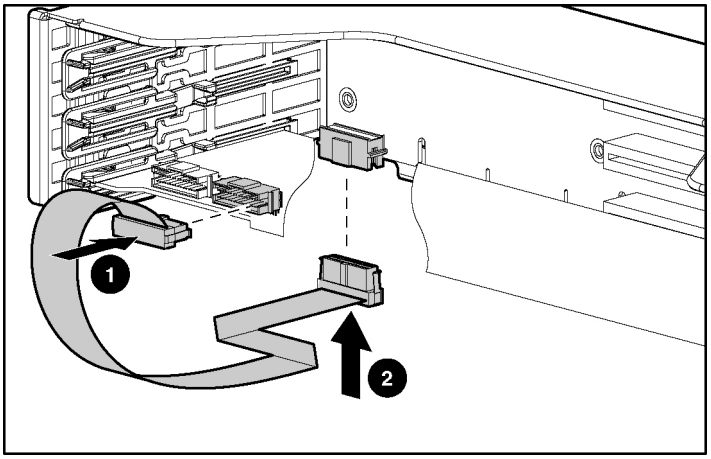

Internal Power Cabling

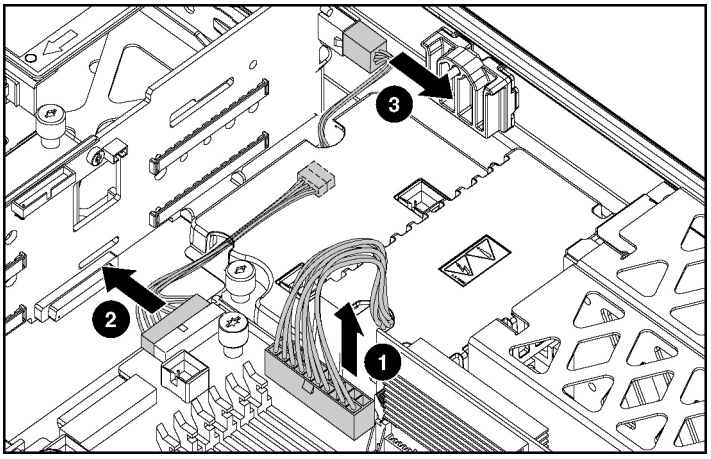

Item	Description
1	System power cable
2	Power supply signal cable
3	SCSI power cable

External Storage Cabling

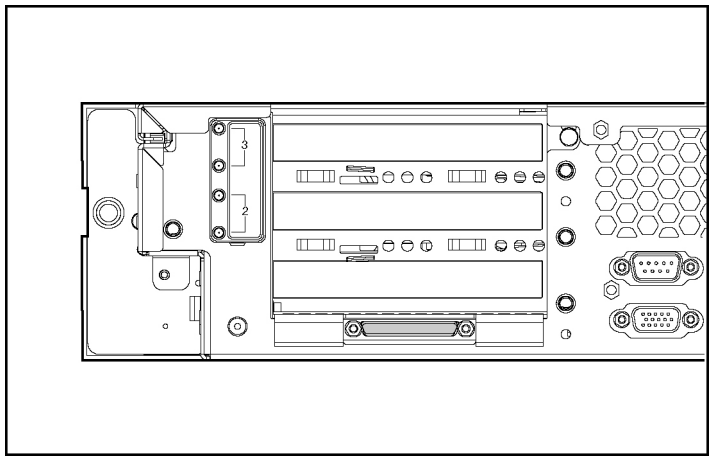

The external VHDCI SCSI connector (port 1) can only be used in the following SCSI configurations:

- Embedded simplex
- PCI simplex
- PCI duplex
- Mixed duplex (one of two configuration options)

  For more information, refer to "Mixed Duplex SCSI Cabling".

After cabling external storage options, use the following software utilities:

- RBSU, to configure new hardware in the system

  For more information, refer to "HP ROM-Based Setup Utility (on page 103)" or the *ROM-Based Setup Utility User Guide* on the Documentation CD.

- ORCA, to configure and manage drive arrays

  For more information, refer to the *Smart Array 6i Controller User Guide* on the Documentation CD.

For more information on external cabling, refer to the HP website (http://www.hp.com/products/servers/platforms).

Server Software and Configuration Utilities

In This Section

Configuration Tools....101
Management Tools....108
Diagnostic Tools....114
Keeping the System Current....116

Configuration Tools

List of Tools:

SmartStart Software....101
HP ROM-Based Setup Utility....103
Array Configuration Utility....106
Option ROM Configuration for Arrays....106
HP ProLiant Essentials Rapid Deployment Pack....107
Re-Entering the Server Serial Number and Product ID....107

SmartStart Software

SmartStart is a collection of software that optimizes single-server setup, providing a simple and consistent way to deploy server configuration. SmartStart has been tested on many ProLiant server products, resulting in proven, reliable configurations.

SmartStart assists the deployment process by performing a wide range of configuration activities, including:

- Configuring hardware using embedded configuration utilities, such as RBSU and ORCA
- Preparing the system for installing "off-the-shelf" versions of leading operating system software
- Installing optimized server drivers, management agents, and utilities automatically with every assisted installation

- Testing server hardware using the Insight Diagnostics Utility ("HP Insight Diagnostics" on page 115)
- Installing software drivers directly from the CD. With systems that have internet connection, the SmartStart Autorun Menu provides access to a complete list of ProLiant system software.
- Enabling access to the Array Configuration Utility (on page 106), Array Diagnostic Utility (on page 115), and Erase Utility

SmartStart is included in the HP ProLiant Essentials Foundation Pack. For more information about SmartStart software, refer to the HP ProLiant Essentials Foundation Pack or the HP website (http://www.hp.com/servers/smartstart).

SmartStart Scripting Toolkit

The SmartStart Scripting Toolkit is a server deployment product that delivers an unattended automated installation for high-volume server deployments. The SmartStart Scripting Toolkit is designed to support ProLiant BL, ML, and DL servers. The toolkit includes a modular set of utilities and important documentation that describes how to apply these new tools to build an automated server deployment process.

Using SmartStart technology, the Scripting Toolkit provides a flexible way to create standard server configuration scripts. These scripts are used to automate many of the manual steps in the server configuration process. This automated server configuration process cuts time from each server deployed, making it possible to scale server deployments to high volumes in rapid fashion.

For more information, and to download the SmartStart Scripting Toolkit, refer to the HP website (http://www.hp.com/servers/sstoolkit).

Configuration Replication Utility

ConRep is shipped in the SmartStart Scripting Toolkit and is a program that works with RBSU to replicate hardware configuration on ProLiant servers. This utility is run during State 0, Run Hardware Configuration Utility, when doing a scripted server deployment. ConRep reads the state of the system environment variables to determine the configuration and then writes the results on an editable script file. This file can then be deployed across multiple servers with similar hardware and software components. For more information, refer to the *SmartStart Scripting Toolkit User Guide* on the HP website (http://h18004.www1.hp.com/products/servers/management/toolkit/documentation.html).

HP ROM-Based Setup Utility

RBSU, an embedded configuration utility, performs a wide range of configuration activities that may include:

- Configuring system devices and installed options
- Displaying system information
- Selecting the primary boot controller
- Configuring memory options
- Language selection

For more information on RBSU, refer to the *HP ROM-Based Setup Utility User Guide* on the Documentation CD or the HP website (http://www.hp.com/servers/smartstart).

Using RBSU

The first time you power up the server, the system prompts you to enter RBSU and select a language. Default configuration settings are made at this time and can be changed later. Most of the features in RBSU are not required to set up the server.

To navigate RBSU, use the following keys:

- To access RBSU, press the **F9** key during power up when prompted in the upper right corner of the screen.
- To navigate the menu system, use the arrow keys.
- To make selections, press the **Enter** key.

IMPORTANT: RBSU automatically saves settings when you press the **Enter** key. The utility does not prompt you for confirmation of settings before you exit the utility. To change a selected setting, you must select a different setting and press the **Enter** key.

Auto-Configuration Process

The auto-configuration process automatically runs when you boot the server for the first time. During the power-up sequence, the system ROM automatically configures the entire system without needing any intervention. During this process, the ORCA utility, in most cases, automatically configures the array to a default setting based on the number of drives connected to the server.

NOTE: The server may not support all the following examples.

NOTE: If the boot drive is not empty or has been written to in the past, ORCA does not automatically configure the array. You must run ORCA to configure the array settings.

Drives Installed	Drives Used	RAID Level
1	1	RAID 0
2	2	RAID 1
3, 4, 5, or 6	3, 4, 5, or 6	RAID 5
More than 6	0	None

To change any ORCA default settings and override the auto-configuration process, press the **F8** key when prompted.

By default, the auto-configuration process configures the system for the English language. To change any default settings in the auto-configuration process, such as the settings for language, operating system, and primary boot controller, execute RBSU by pressing the **F9** key when prompted. After the settings are selected, exit RBSU and allow the server to reboot automatically.

For more information, refer to the *HP ROM-Based Setup Utility User Guide* on the Documentation CD or the HP website (http://www.hp.com/servers/smartstart).

Boot Options

After the auto-configuration process completes, or after the server reboots upon exit from RBSU, the POST sequence runs, and then the boot option screen is displayed. This screen is visible for several seconds before the system attempts to boot from either a diskette, CD, or hard drive. During this time, the menu on the screen allows you to install an operating system or make changes to the server configuration in RBSU.

BIOS Serial Console

BIOS Serial Console allows you to configure the serial port to view POST error messages and run RBSU remotely through a serial connection to the server COM port. The server that you are remotely configuring does not require a keyboard and mouse.

For more information about BIOS Serial Console, refer to the *BIOS Serial Console User Guide* on the Documentation CD or the HP website (http://www.hp.com/servers/smartstart).

Configuring Online Spare Memory

To configure online spare memory:

1. Install the required DIMMs.
2. Access RBSU by pressing the **F9** key during powerup when the prompt is displayed in the upper right corner of the screen.
3. Select **System Options**.
4. Select **Advanced Memory Protection**.
5. Select **Online Spare with Advanced ECC Support**.
6. Press the **Enter** key.
7. Press the **Esc** key to exit the current menu or press the **F10** key to exit RBSU.

For more information on online spare memory, refer to the white paper on the HP website (http://www.compaq.com/support/techpubs/whitepapers/tm010301wp.html).

Array Configuration Utility

ACU is a browser-based utility with the following features:

- Runs as a local application or remote service
- Supports online array capacity expansion, logical drive extension, assignment of online spares, and RAID or stripe size migration
- Suggests the optimum configuration for an unconfigured system
- Provides different operating modes, enabling faster configuration or greater control over the configuration options
- Remains available any time that the server is on
- Displays on-screen tips for individual steps of a configuration procedure

The minimum display settings for optimum performance are 800 × 600 resolution and 256 colors. The server must have Microsoft® Internet Explorer 5.5 (with Service Pack 1) installed and be running Microsoft® Windows® 2000, Windows® Server 2003, or Linux. Refer to the *README.TXT* file for further information about browser and Linux support.

For more information, refer to the *HP Array Configuration Utility User Guide* on the Documentation CD or the HP website (http://www.hp.com).

Option ROM Configuration for Arrays

Before installing an operating system, you can use the ORCA utility to create the first logical drive, assign RAID levels, and establish online spare configurations.

The utility provides support for the following functions:

- Configuring one or more logical drives using physical drives on one or more SCSI buses
- Viewing the current logical drive configuration

- Deleting a logical drive configuration

If you do not use the utility, ORCA will default to the standard configuration.

For more information regarding array controller configuration, refer to the controller user guide.

For more information regarding the default configurations that ORCA uses, refer to the *HP ROM-Based Setup Utility User Guide* on the Documentation CD.

HP ProLiant Essentials Rapid Deployment Pack

The RDP software is the preferred method for rapid, high-volume server deployments. The RDP software integrates two powerful products: Altiris Deployment Solution and the HP ProLiant Integration Module.

The intuitive graphical user interface of the Altiris Deployment Solution console provides simplified point and click, and drag and drop operations that enable you to deploy target servers remotely, perform imaging or scripting functions, and maintain software images.

For more information about the RDP, refer to the HP ProLiant Essentials Rapid Deployment Pack CD or refer to the HP website (http://www.hp.com/servers/rdp).

Re-Entering the Server Serial Number and Product ID

After you replace the system board, you must re-enter the server serial number and the product ID.

1. During the server startup sequence, press the **F9** key to access RBSU.
2. Select the **System Options** menu.
3. Select **Serial Number**. The following warning is displayed:

```
WARNING! WARNING! WARNING! The serial number is loaded
into the system during the manufacturing process and
should NOT be modified. This option should only be used
by qualified service personnel. This value should always
match the serial number sticker located on the chassis.
```

4. Press the **Enter** key to clear the warning.
5. Enter the serial number and press the **Enter** key.
6. Select **Product ID**.
7. Enter the product ID and press the **Enter** key.
8. Press the **Esc** key to close the menu.
9. Press the **Esc** key to exit RBSU.
10. Press the **F10** key to confirm exiting RBSU. The server will automatically reboot.

Management Tools

List of Tools:

Automatic Server Recovery....108
ROMPaq Utility....109
System Online ROM Flash Component Utility....109
Integrated Lights-Out Technology....110
StorageWorks Library and Tape Tools....110
Management Agents....111
HP Systems Insight Manager....111
Redundant ROM Support....111
iLO ROM-Based Setup Utility....113
USB Support....114

Automatic Server Recovery

ASR is a feature that causes the system to restart when a catastrophic operating system error occurs, such as a blue screen, ABEND, or panic. A system fail-safe timer, the ASR timer, starts when the System Management driver, also known as the Health Driver, is loaded. When the operating system is functioning properly, the system periodically resets the timer. However, when the operating system fails, the timer expires and restarts the server.

ASR increases server availability by restarting the server within a specified time after a system hang or shutdown. At the same time, the HP SIM console notifies you by sending a message to a designated pager number that ASR has restarted the system. You can disable ASR from the HP SIM console or through RBSU.

ROMPaq Utility

Flash ROM enables you to upgrade the firmware (BIOS) with system or option ROMPaq utilities. To upgrade the BIOS, insert a ROMPaq diskette into the diskette drive and boot the system.

The ROMPaq utility checks the system and provides a choice (if more than one exists) of available ROM revisions. This procedure is the same for both system and option ROMPaq utilities.

For more information about the ROMPaq utility, refer to the HP website (http://www.hp.com/servers/manage).

System Online ROM Flash Component Utility

The Online ROM Flash Component Utility enables system administrators to efficiently upgrade system or controller ROM images across a wide range of servers and array controllers. This tool has the following features:

- Works offline and online
- Supports Microsoft® Windows NT®, Windows® 2000, Windows® Server 2003, Novell Netware, and Linux operating systems

  IMPORTANT: This utility supports operating systems that may not be supported by the server. For operating systems supported by the server, refer to the HP website (http://www.hp.com/go/supportos).

- Integrates with other software maintenance, deployment, and operating system tools
- Automatically checks for hardware, firmware, and operating system dependencies, and installs only the correct ROM upgrades required by each target server

To download the tool and for more information, refer to the HP website (http://h18000.www1.hp.com/support/files/index.html).

Integrated Lights-Out Technology

The iLO subsystem is a standard component of selected ProLiant servers that provides server health and remote server manageability. The iLO subsystem includes an intelligent microprocessor, secure memory, and a dedicated network interface. This design makes iLO independent of the host server and its operating system. The iLO subsystem provides remote access to any authorized network client, sends alerts, and provides other server management functions.

Using iLO, you can:

- Remotely power up, power down, or reboot the host server.
- Send alerts from iLO regardless of the state of the host server.
- Access advanced troubleshooting features through the iLO interface.
- Diagnose iLO using HP SIM through a web browser and SNMP alerting.

For more information about iLO features, refer to the *Integrated Lights-Out User Guide* on the Documentation CD or on the HP website (http://www.hp.com/servers/lights-out).

StorageWorks Library and Tape Tools

HP StorageWorks L&TT provides functionality for firmware downloads, verification of device operation, maintenance procedures, failure analysis, corrective service actions, and some utility functions. It also provides seamless integration with HP hardware support by generating and emailing support tickets that deliver a snapshot of the storage system.

For more information, and to download the utility, refer to the StorageWorks L&TT website (http://h18006.www1.hp.com/products/storageworks/ltt).

Management Agents

Management Agents provide the information to enable fault, performance, and configuration management. The agents allow easy manageability of the server through HP SIM software, and third-party SNMP management platforms. Management Agents are installed with every SmartStart assisted installation or can be installed through the HP PSP. The Systems Management homepage provides status and direct access to in-depth subsystem information by accessing data reported through the Management Agents. For additional information, refer to the Management CD in the HP ProLiant Essentials Foundation Pack or the HP website (http://www.hp.com/servers/manage).

HP Systems Insight Manager

HP SIM is a web-based application that allows system administrators to accomplish normal administrative tasks from any remote location, using a web browser. HP SIM provides device management capabilities that consolidate and integrate management data from HP and third-party devices.

IMPORTANT: You must install and use HP SIM to benefit from the Pre-Failure Warranty for processors, hard drives, and memory modules.

For additional information, refer to the Management CD in the HP ProLiant Essentials Foundation Pack or the HP SIM website (http://www.hp.com/go/hpsim).

Redundant ROM Support

The server enables you to upgrade or configure the ROM safely with redundant ROM support. The server has a 4-MB ROM that acts as two, separate 2-MB ROMs. In the standard implementation, one side of the ROM contains the current ROM program version, while the other side of the ROM contains a backup version.

NOTE: The server ships with the same version programmed on each side of the ROM.

Safety and Security Benefits

When you flash the system ROM, ROMPaq writes over the backup ROM and saves the current ROM as a backup, enabling you to switch easily to the alternate ROM version if the new ROM becomes corrupted for any reason. This feature protects the existing ROM version, even if you experience a power failure while flashing the ROM.

Access to Redundant ROM Settings

To access the redundant ROM through RBSU:

1. Access RBSU by pressing the **F9** key during powerup when the prompt is displayed in the upper right corner of the screen.
2. Select **Advanced Options**.
3. Select **Redundant ROM Selection**.
4. Select the ROM version.
5. Press the **Enter** key.
6. Press the **Esc** key to exit the current menu or press the **F10** key to exit RBSU. The server restarts automatically.

To access the redundant ROM manually:

1. Power down the server ("Powering Down the Server" on page 33).
2. Remove the access panel ("Removing the Access Panel" on page 36).
3. Set positions 1, 5, and 6 of the system maintenance switch to On.
4. Install the access panel ("Installing the Access Panel" on page 37).
5. Power up the server ("Powering Up the Server" on page 33).
6. Wait for the server to emit two beeps.
7. Repeat steps 1 and 2.
8. Set positions 1, 5, and 6 of the system maintenance switch to Off.
9. Repeat steps 4 and 5.

When the server boots, the system identifies whether the current ROM bank is corrupt. If a corrupt ROM is detected, the system boots from the backup ROM and alerts you through POST or IML that the ROM bank is corrupt.

If both the current and backup versions of the ROM are corrupt, the server automatically enters ROMPaq disaster recovery mode.

iLO ROM-Based Setup Utility

HP recommends using iLO RBSU to configure and set up iLO. iLO RBSU is designed to assist you with setting up iLO on a network; it is not intended for continued administration.

To run iLO RBSU:

1. Restart or power up the server.
2. Press the **F8** key when prompted during POST. The iLO RBSU runs.
3. Enter a valid iLO user ID and password with the appropriate iLO privileges (**Administer User Accounts**, **Configure iLO Settings**). Default account information is located on the iLO Default Network Settings tag.
4. Make and save any necessary changes to the iLO configuration.
5. Exit iLO RBSU.

HP recommends using DNS/DHCP with iLO to simplify installation. If DNS/DHCP cannot be used, use the following procedure to disable DNS/DHCP and to configure the IP address and the subnet mask:

1. Restart or power up the server.
2. Press the **F8** key when prompted during POST. The iLO RBSU runs.
3. Enter a valid iLO user ID and password with the appropriate iLO privileges (**Administer User Accounts**, **Configure iLO Settings**). Default account information is located on the iLO Default Network Settings tag.
4. Select **Network**, **DNS/DHCP**, press the **Enter** key, and then select **DHCP Enable**. Press the spacebar to turn off DHCP. Be sure that DHCP Enable is set to Off and save the changes.

5. Select **Network**, **NIC and TCP/IP**, press the **Enter** key, and type the appropriate information in the IP Address, Subnet Mask, and Gateway IP Address fields.
6. Save the changes. The iLO system automatically resets to use the new setup when you exit iLO RBSU.

USB Support

HP provides both standard USB support and legacy USB support. Standard support is provided by the operating system through the appropriate USB device drivers. HP provides support for USB devices prior to the operating system loading through legacy USB support, which is enabled by default in the system ROM. HP hardware supports USB version 2.0.

Legacy USB support provides USB functionality in environments where USB support is normally not available. Specifically, HP provides legacy USB functionality at:

- POST
- RBSU
- Diagnostics
- DOS
- Environments which do not support USB natively

For more information on ProLiant USB support, refer to the HP website (http://www.compaq.com/products/servers/platforms/usb-support.html).

Diagnostic Tools

List of Tools:

Survey Utility 115
Array Diagnostic Utility 115
HP Insight Diagnostics 115
Integrated Management Log 116

Survey Utility

Survey Utility, a feature within Insight Diagnostics, gathers critical hardware and software information on ProLiant servers.

This utility supports operating systems that may not be supported by the server. For operating systems supported by the server, refer to the HP website (http://www.hp.com/go/supportos).

If a significant change occurs between data-gathering intervals, the Survey Utility marks the previous information and overwrites the Survey text files to reflect the latest changes in the configuration.

Survey Utility is installed with every SmartStart-assisted installation or can be installed through the HP PSP.

Array Diagnostic Utility

ADU is a Windows-based tool that collects information about array controllers and generates a list of detected problems. For a list of error messages, refer to "ADU Error Messages (on page 190)."

ADU can be accessed from the SmartStart CD ("Configuration Tools" on page 101, "SmartStart Software" on page 101).

HP Insight Diagnostics

HP Insight Diagnostics is a proactive server management tool, available in both offline and online versions, that provides diagnostics and troubleshooting capabilities to assist IT administrators who verify server installations, troubleshoot problems, and perform repair validation.

HP Insight Diagnostics Offline Edition performs various in-depth system and component testing while the OS is not running. To run this utility, launch the SmartStart CD.

HP Insight Diagnostics Online Edition is a web-based application that captures system configuration and other related data needed for effective server management. Available in Microsoft® Windows® and Linux versions, the utility helps to ensure proper system operation.

For more information or to download the utility, refer to the HP website (http://www.hp.com/servers/diags).

Integrated Management Log

The IML records hundreds of events and stores them in an easy-to-view form. The IML timestamps each event with 1-minute granularity.

You can view recorded events in the IML in several ways, including the following:

- From within HP SIM
- From within Survey Utility
- From within operating system-specific IML viewers
  - For NetWare: IML Viewer
  - For Windows®: IML Viewer
  - For Linux: IML Viewer Application
- From within HP Insight Diagnostics

For more information, refer to the Management CD in the HP ProLiant Essentials Foundation Pack.

Keeping the System Current

List of Tools:

Drivers 117
Resource Paqs 117
ProLiant Support Packs 118
Operating System Version Support 118
PaqFax 118

Change Control and Proactive Notification.....118
Natural Language Search Assistant.....118
Care Pack.....119

Drivers

The server includes new hardware that may not have driver support on all operating system installation media.

If you are installing a SmartStart-supported operating system, use the SmartStart software ("Configuration Tools" on page 101, on page 101) and its Assisted Path feature to install the operating system and latest driver support.

> **NOTE:** If you are installing drivers from the SmartStart CD or the Software Maintenance CD, refer to the SmartStart website (http://www.hp.com/servers/smartstart) to be sure that you are using the latest version of SmartStart. For more information, refer to the documentation provided with the SmartStart CD.

If you do not use the SmartStart CD to install an operating system, drivers for some of the new hardware are required. These drivers, as well as other option drivers, ROM images, and value-add software can be downloaded from the HP website (http://www.hp.com/support).

> **IMPORTANT:** Always perform a backup before installing or updating device drivers.

Resource Paqs

Resource Paqs are operating system-specific packages of tools, utilities, and information for HP servers running certain Microsoft® or Novell operating systems. The Resource Paqs include utilities to monitor performance, software drivers, customer support information, and whitepapers on the latest server integration information. Refer to the Enterprise Partnerships website (http://h18000.www1.hp.com/partners), select **Microsoft** or **Novell**, depending on the operating system, and follow the link to the appropriate Resource Paq.

ProLiant Support Packs

PSPs represent operating system-specific bundles of ProLiant optimized drivers, utilities, and management agents. Refer to the PSP website (http://h18000.www1.hp.com/products/servers/management/psp.html).

Operating System Version Support

Refer to the operating system support matrix (http://www.hp.com/go/supportos).

PaqFax

PaqFax provides technical, warranty, and support information transmitted by facsimile (fax) machine. For more information, refer to the PaqFax website (http://h18000.www1.hp.com/support/paqfax).

Change Control and Proactive Notification

HP offers Change Control and Proactive Notification to notify customers 30 to 60 days in advance of upcoming hardware and software changes on HP commercial products.

For more information, refer to the HP website (http://h18023.www1.hp.com/solutions/pcsolutions/pcn.html).

Natural Language Search Assistant

The Natural Language Search Assistant (http://askq.compaq.com) is a search engine that finds information on HP products, including ProLiant servers. The search engine responds to queries entered in question form.

Care Pack

HP Care Pack Services offer upgraded service levels to extend and expand standard product warranty with easy-to-buy, easy-to-use support packages that help you make the most of your server investments. Refer to the Care Pack website (http://www.hp.com/hps/carepack/servers/cp_proliant.html).

Troubleshooting

In This Section

Server Diagnostic Steps.....121
Procedures for All ProLiant Servers.....141
Error Messages.....190

Server Diagnostic Steps

This section covers the steps to take in order to diagnose a problem quickly.

To effectively troubleshoot a problem, HP recommends that you start with the first flowchart in this section, "Start Diagnosis Flowchart (on page 127)," and follow the appropriate diagnostic path. If the other flowcharts do not provide a troubleshooting solution, follow the diagnostic steps in "General Diagnosis Flowchart (on page 129)." The General Diagnosis flowchart is a generic troubleshooting process to be used when the problem is not server-specific or is not easily categorized into the other flowcharts.

IMPORTANT: This guide provides information for multiple servers. Some information may not apply to the server you are troubleshooting. Refer to the server documentation for information on procedures, hardware options, software tools, and operating systems supported by the server.



WARNING: To avoid potential problems, ALWAYS read the warnings and cautionary information in the server documentation before removing, replacing, reseating, or modifying system components.

Important Safety Information

Familiarize yourself with the safety information in the following sections before troubleshooting the server.



Important Safety Information

Before servicing this product, read the *Important Safety Information* document provided with the server.

Symbols on Equipment

The following symbols may be placed on equipment to indicate the presence of potentially hazardous conditions.



This symbol indicates the presence of hazardous energy circuits or electric shock hazards. Refer all servicing to qualified personnel.

WARNING: To reduce the risk of injury from electric shock hazards, do not open this enclosure. Refer all maintenance, upgrades, and servicing to qualified personnel.



This symbol indicates the presence of electric shock hazards. The area contains no user or field serviceable parts. Do not open for any reason.

WARNING: To reduce the risk of injury from electric shock hazards, do not open this enclosure.



This symbol on an RJ-45 receptacle indicates a network interface connection.

WARNING: To reduce the risk of electric shock, fire, or damage to the equipment, do not plug telephone or telecommunications connectors into this receptacle.

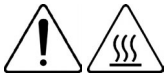

This symbol indicates the presence of a hot surface or hot component. If this surface is contacted, the potential for injury exists.

WARNING: To reduce the risk of injury from a hot component, allow the surface to cool before touching.



20.41 - 27.22 kg

47.18 - 60 lb

This symbol indicates that the component exceeds the recommended weight for one individual to handle safely.

WARNING: To reduce the risk of personal injury or damage to the equipment, observe local occupational health and safety requirements and guidelines for manual material handling.



These symbols, on power supplies or systems, indicate that the equipment is supplied by multiple sources of power.

WARNING: To reduce the risk of injury from electric shock, remove all power cords to completely disconnect power from the system.

Warnings and Cautions



WARNING: Only authorized technicians trained by HP should attempt to repair this equipment. All troubleshooting and repair procedures are detailed to allow only subassembly/module-level repair. Because of the complexity of the individual boards and subassemblies, no one should attempt to make repairs at the component level or to make modifications to any printed wiring board. Improper repairs can create a safety hazard.



WARNING: To reduce the risk of personal injury or damage to the equipment, be sure that:

- **The leveling feet are extended to the floor.**
- **The full weight of the rack rests on the leveling feet.**
- **The stabilizing feet are attached to the rack if it is a single-rack installation.**
- **The racks are coupled together in multiple-rack installations.**
- **Only one component is extended at a time. A rack may become unstable if more than one component is extended for any reason.**

 **WARNING: To reduce the risk of electric shock or damage to the equipment:**

- **Do not disable the power cord grounding plug. The grounding plug is an important safety feature.**
- **Plug the power cord into a grounded (earthed) electrical outlet that is easily accessible at all times.**
- **Unplug the power cord from the power supply to disconnect power to the equipment.**
- **Do not route the power cord where it can be walked on or pinched by items placed against it. Pay particular attention to the plug, electrical outlet, and the point where the cord extends from the server.**



20.41 - 27.22 kg

47.18 - 60 lb

WARNING: To reduce the risk of personal injury or damage to the equipment:

- **Observe local occupation health and safety requirements and guidelines for manual handling.**
- **Obtain adequate assistance to lift and stabilize the chassis during installation or removal.**
- **The server is unstable when not fastened to the rails.**
- **When mounting the server in a rack, remove the power supplies and any other removable module to reduce the overall weight of the product.**

 **CAUTION:** To properly ventilate the system, you must provide at least 7.6 cm (3.0 in) of clearance at the front and back of the server.

 **CAUTION:** The server is designed to be electrically grounded (earthed). To ensure proper operation, plug the AC power cord into a properly grounded AC outlet only.

Preparing the Server for Diagnosis

1. Be sure the server is in the proper operating environment with adequate power, air conditioning, and humidity control. Refer to the server documentation for required environmental conditions.
2. Record any error messages displayed by the system.
3. Remove all diskettes and CDs from the media drives.
4. Power down the server and peripheral devices if you will be diagnosing the server offline. Always perform an orderly shutdown, if possible. This means you must:
   a. Exit any applications.
   b. Exit the operating system.
   c. Power down the server ("Powering Down the Server" on page 33).
5. Disconnect any peripheral devices not required for testing (any devices not necessary to power up the server). Do not disconnect the printer if you want to use it to print error messages.

6. Collect all tools and utilities, such as a Torx screwdriver, loopback adapters, ESD wrist strap, and software utilities, necessary to troubleshoot the problem.
   - You must have the appropriate Health Drivers and Management Agents installed on the server.

     NOTE: To verify the server configuration, connect to the System Management homepage and select **Version Control Agent**. The VCA gives you a list of names and versions of all installed HP drivers, Management Agents, and utilities, and whether they are up to date.
   - HP recommends you have access to the SmartStart CD for value-added software and drivers required during the troubleshooting process.
   - HP recommends you have access to the server documentation for server-specific information.

Symptom Information

Before troubleshooting a server problem, collect the following information:

- What events preceded the failure? After which steps does the problem occur?
- What has been changed between the time the server was working and now?
- Did you recently add or remove hardware or software? If so, did you remember to change the appropriate settings in the server setup utility, if necessary?
- Has the server exhibited problem symptoms for a period of time?
- If the problem occurs randomly, what is the duration or frequency?

To answer these questions, the following information may be useful:

- Run HP Insight Diagnostics (on page 115) and use the survey page to view the current configuration or to compare it to previous configurations.
- Refer to your hardware and software records for information.

Diagnostic Steps

To effectively troubleshoot a problem, HP recommends that you start with the first flowchart in this section, "Start Diagnosis Flowchart (on page 127)," and follow the appropriate diagnostic path. If the other flowcharts do not provide a troubleshooting solution, follow the diagnostic steps in "General Diagnosis Flowchart (on page 129)." The General Diagnosis flowchart is a generic troubleshooting process to be used when the problem is not server-specific or is not easily categorized into the other flowcharts.

The available flowcharts include:

- Start Diagnosis Flowchart (on page 127)
- General Diagnosis Flowchart (on page 129)
- Power-On Problems Flowchart (on page 131)
- POST Problems Flowchart (on page 134)
- OS Boot Problems Flowchart (on page 136)
- Server Fault Indications Flowchart (on page 138)

The number contained in parentheses in the flowchart boxes corresponds to a table with references to other detailed documents or troubleshooting instructions.

Start Diagnosis Flowchart

Use the following flowchart to start the diagnostic process.

Item	Refer to
1	"General Diagnosis Flowchart (on page 129)"
2	"Power-On Problems Flowchart (on page 131)"
3	"POST Problems Flowchart (on page 134)"
4	"OS Boot Problems Flowchart (on page 136)"
5	"Server Fault Indications Flowchart (on page 138)"

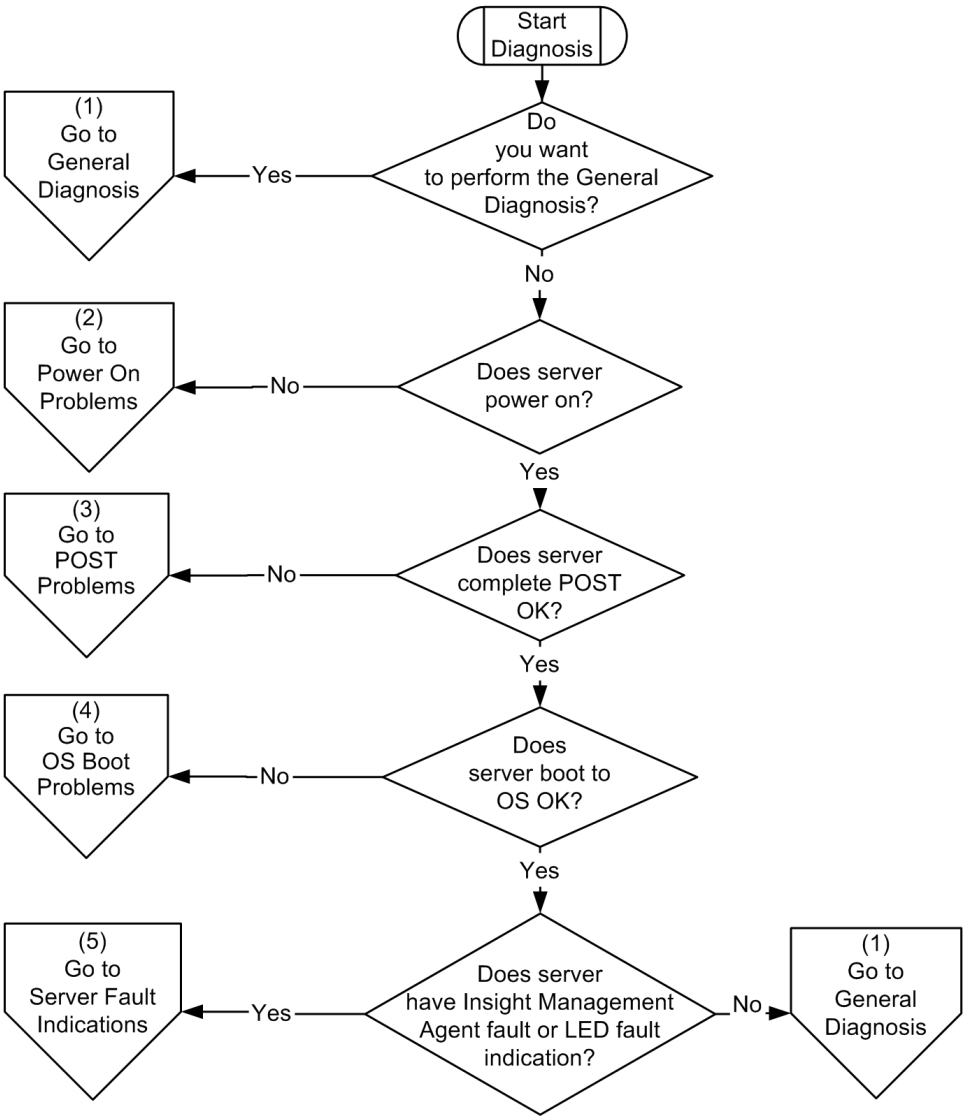
Start Diagnosis
Do you want to perform the General Diagnosis?
Yes
(1) Go to General Diagnosis
No
Does server power on?
No
(2) Go to Power On Problems
Yes
Does server complete POST OK?
No
(3) Go to POST Problems
Yes
Does server boot to OS OK?
No
(4) Go to OS Boot Problems
Yes
Does server have Insight Management Agent fault or LED fault indication?
Yes
(5) Go to Server Fault Indications
No
(1) Go to General Diagnosis

General Diagnosis Flowchart

The General Diagnosis flowchart provides a generic approach to troubleshooting. If you are unsure of the problem, or if the other flowcharts do not fix the problem, use the following flowchart.

Item	Refer to
1	"Symptom Information (on page 126)"
2	"Loose Connections (on page 144)"
3	"Service Notifications"
4	Server maintenance and service guide, located on the Documentation CD or the HP website (http://www.hp.com/products/servers/platforms)
5	Server user guide or setup and installation guide, located on the Documentation CD or the HP website (http://www.hp.com/products/servers/platforms)
6	• Server maintenance and service guide, located on the Documentation CD or the HP website (http://www.hp.com/products/servers/platforms) • "Hardware Problems (on page 141)"
7	• "Server Information You Need (on page 183)" • "Operating System Information You Need (on page 184)"
8	"Contacting HP Technical Support or an Authorized Reseller (on page 182)"

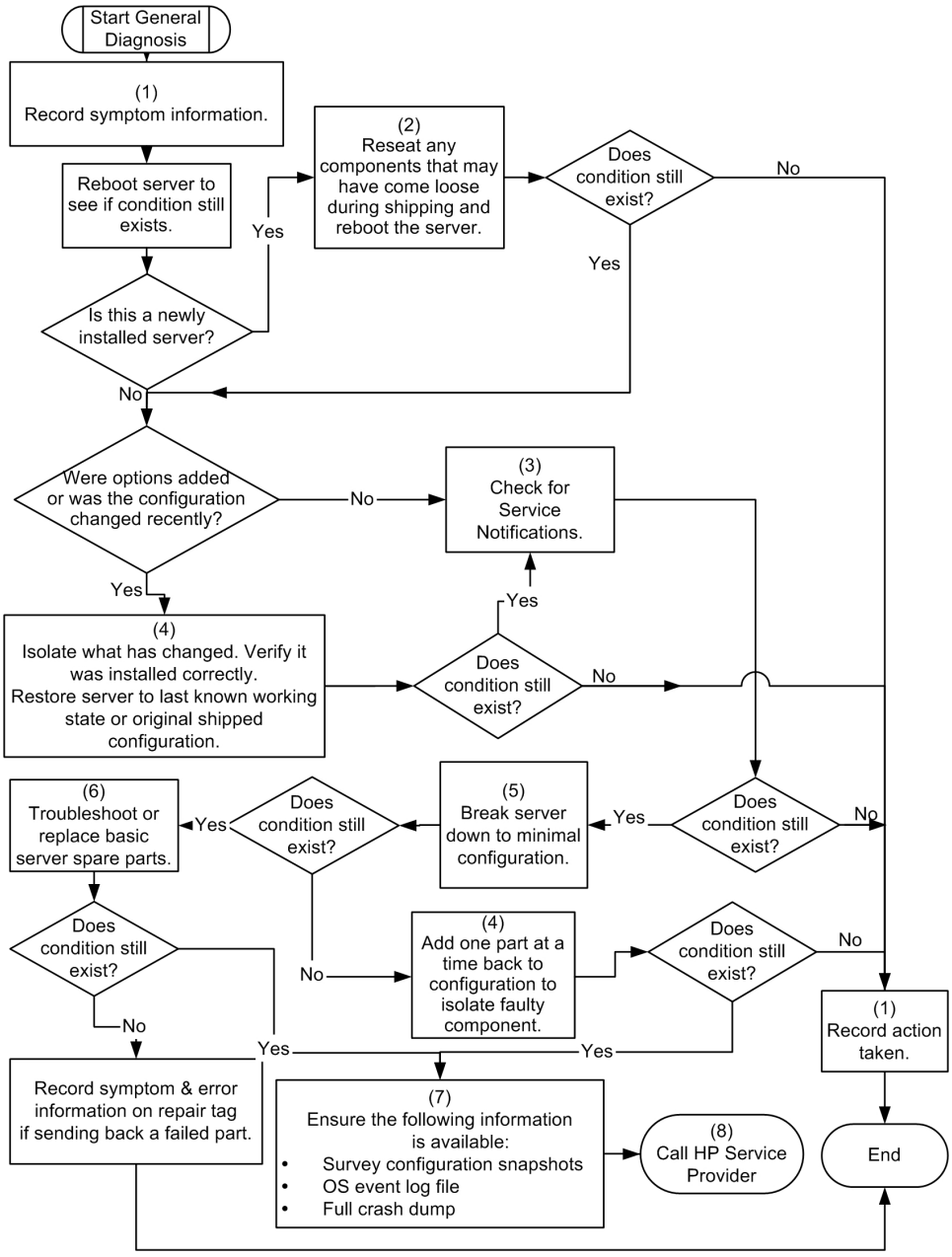
Start General Diagnosis
(1) Record symptom information.
Reboot server to see if condition still exists.
Yes
(2) Reseat any components that may have come loose during shipping and reboot the server.
Does condition still exist?
No
Yes
Is this a newly installed server?
No
Were options added or was the configuration changed recently?
No
(3) Check for Service Notifications.
Yes
(4) Isolate what has changed. Verify it was installed correctly. Restore server to last known working state or original shipped configuration.
Does condition still exist?
Yes
No
(6) Troubleshoot or replace basic server spare parts.
Yes
Does condition still exist?
(5) Break server down to minimal configuration.
Yes
Does condition still exist?
No
Does condition still exist?
No
(4) Add one part at a time back to configuration to isolate faulty component.
Does condition still exist?
No
(1) Record action taken.
No
Yes
Yes
Record symptom & error information on repair tag if sending back a failed part.
(7) Ensure the following information is available:
• Survey configuration snapshots
• OS event log file
• Full crash dump
(8) Call HP Service Provider
End

Power-On Problems Flowchart

Symptoms:

- The server does not power on.
- The system power LED is off or amber.
- The external health LED is red or amber.
- The internal health LED is red or amber.

NOTE: For the location of server LEDs and information on their statuses, refer to the server documentation.

Possible causes:

- Improperly seated or faulty power supply
- Loose or faulty power cord
- Power source problem
- Power on circuit problem
- Improperly seated component or interlock problem
- Faulty internal component

Item	Refer to
1	Server user guide or setup and installation guide, located on the Documentation CD or the HP website (http://www.hp.com/products/servers/platforms).
2	"HP Insight Diagnostics (on page 115)"
3	"Loose Connections (on page 144)"
4	Server maintenance and service guide, located on the Documentation CD or the HP website (http://www.hp.com/products/servers/platforms)
5	"Integrated Management Log (on page 116)"
6	"Power Source Problems (on page 141)"

Item	Refer to
7	• "Power Supply Problems (on page 142)" • Server maintenance and service guide, located on the Documentation CD or the HP website (http://www.hp.com/products/servers/platforms)
8	"System Open Circuits and Short Circuits (on page 162)"

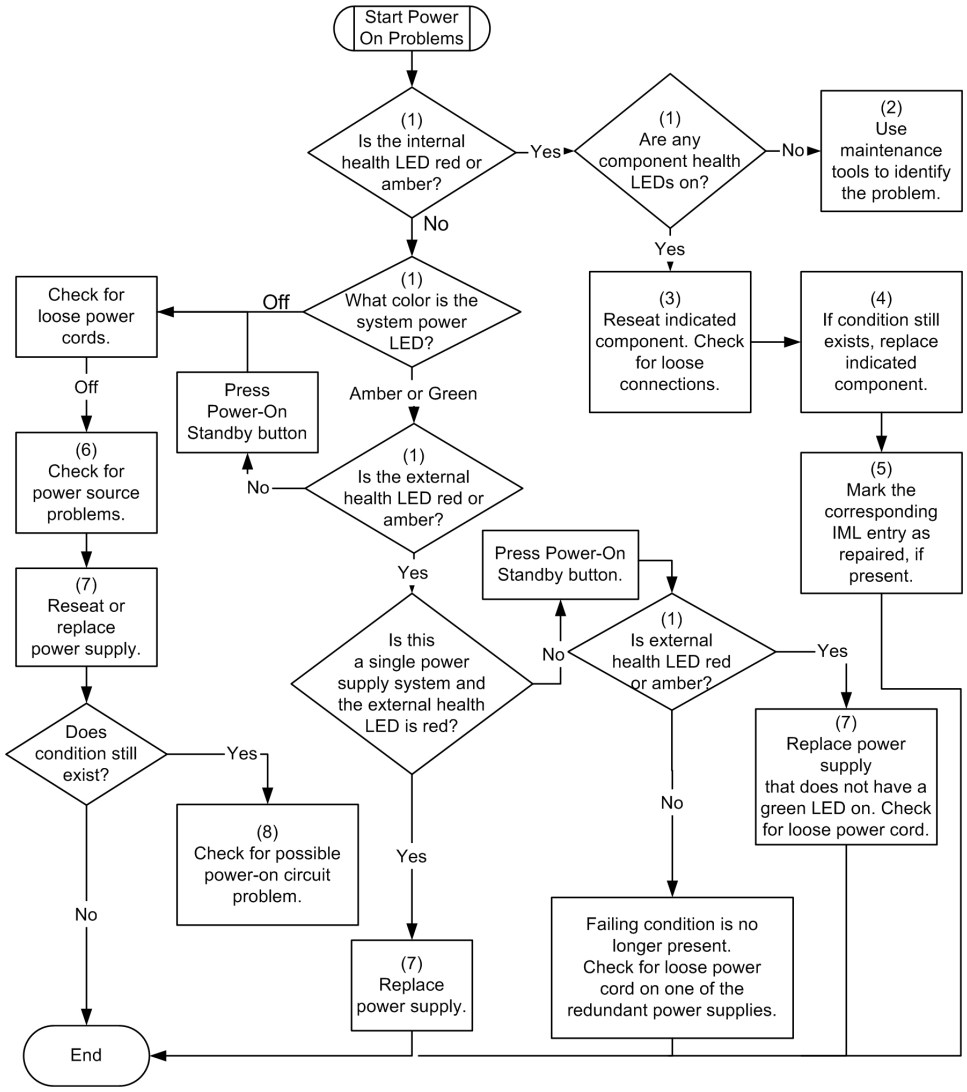
Start Power On Problems
(1) Is the internal health LED red or amber?
Yes
(1) Are any component health LEDs on?
No
(2) Use maintenance tools to identify the problem.
Yes
(3) Reseat indicated component. Check for loose connections.
(4) If condition still exists, replace indicated component.
(5) Mark the corresponding IML entry as repaired, if present.
No
(1) What color is the system power LED?
Off
Check for loose power cords.
Off
(6) Check for power source problems.
(7) Reseat or replace power supply.
Does condition still exist?
Yes
(8) Check for possible power-on circuit problem.
No
Press Power-On Standby button
Amber or Green
(1) Is the external health LED red or amber?
No
Yes
Is this a single power supply system and the external health LED is red?
No
Press Power-On Standby button.
(1) Is external health LED red or amber?
Yes
(7) Replace power supply that does not have a green LED on. Check for loose power cord.
No
Failing condition is no longer present. Check for loose power cord on one of the redundant power supplies.
Yes
(7) Replace power supply.
End

POST Problems Flowchart

Symptoms:

- Server does not complete POST

  NOTE: The server has completed POST when the system attempts to access the boot device.

- Server completes POST with errors

Possible Problems:

- Improperly seated or faulty internal component
- Faulty KVM device
- Faulty video device

Item	Refer to
1	"POST Error Messages ("POST Error Messages and Beep Codes" on page 223)"
2	"Video Problems (on page 163)"
3	KVM or RILOE documentation
4	"Loose Connections (on page 144)"
5	Server maintenance and service guide, located on the Documentation CD or the HP website (http://www.hp.com/products/servers/platforms)
6	Server user guide or setup and installation guide, located on the Documentation CD or the HP website (http://www.hp.com/products/servers/platforms)
7	• "Hardware Problems (on page 141)" • Server maintenance and service guide, located on the Documentation CD or the HP website (http://www.hp.com/products/servers/platforms)

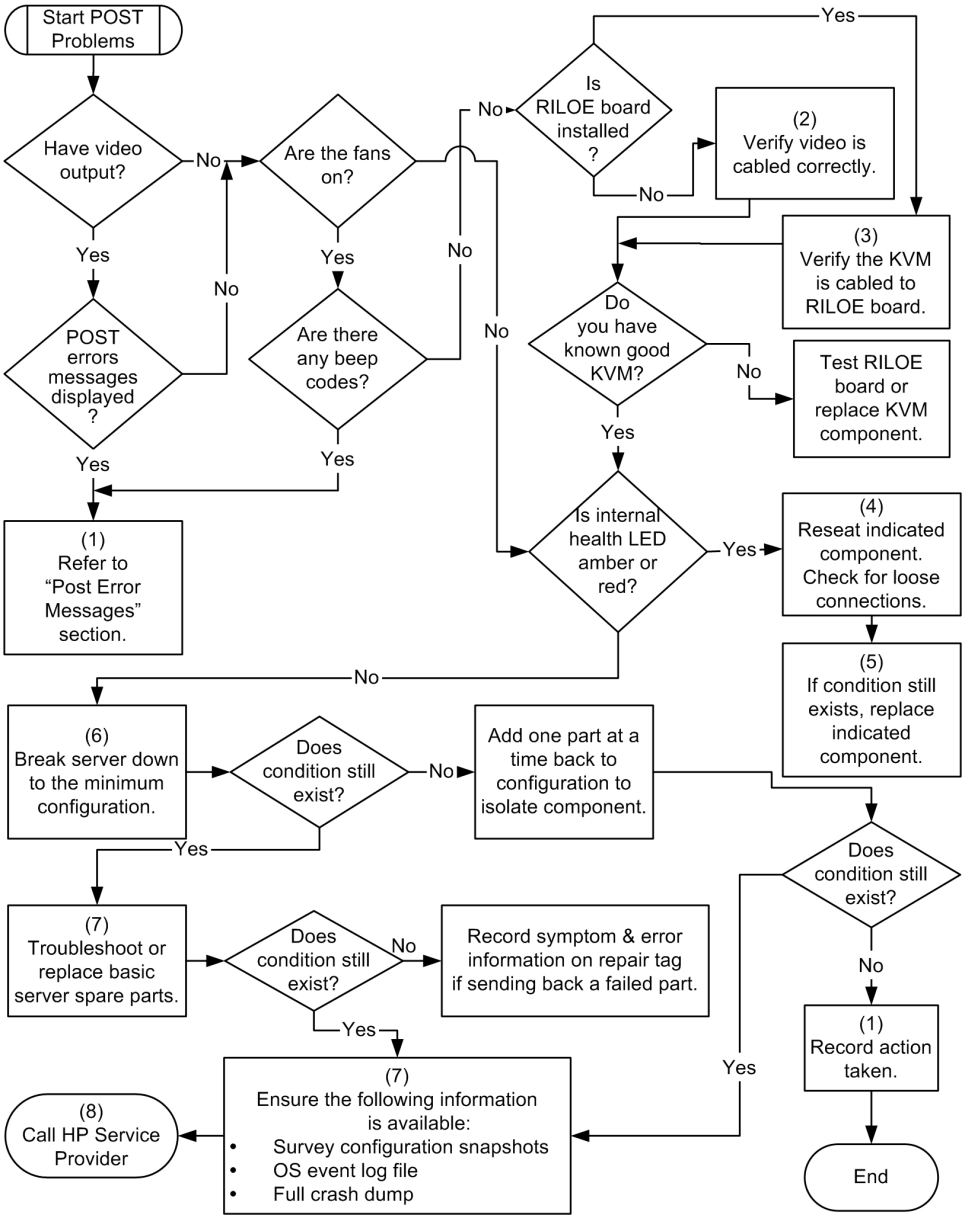
Start POST Problems
Have video output?
No
Are the fans on?
No
Is RILOE board installed ?
Yes
No
(2) Verify video is cabled correctly.
Yes
(3) Verify the KVM is cabled to RILOE board.
Yes
POST errors messages displayed ?
No
Yes
Are there any beep codes?
No
Yes
No
Do you have known good KVM?
No
Test RILOE board or replace KVM component.
Yes
Yes
(1) Refer to "Post Error Messages" section.
Is internal health LED amber or red?
Yes
(4) Reseat indicated component. Check for loose connections.
(5) If condition still exists, replace indicated component.
No
(6) Break server down to the minimum configuration.
Does condition still exist?
No
Add one part at a time back to configuration to isolate component.
Yes
(7) Troubleshoot or replace basic server spare parts.
Does condition still exist?
No
Record symptom & error information on repair tag if sending back a failed part.
Yes
Does condition still exist?
No
(1) Record action taken.
End
Yes
(7) Ensure the following information is available:
• Survey configuration snapshots
• OS event log file
• Full crash dump
(8) Call HP Service Provider

OS Boot Problems Flowchart

Symptoms:

- Server does not boot a previously installed operating system
- Server does not boot SmartStart

Possible Causes:

- Corrupted operating system
- Hard drive subsystem problem

Item	Refer to
1	*HP ROM-Based Setup Utility User Guide* (http://www.hp.com/servers/smartstart)
2	"POST Problems ("POST Problems Flowchart" on page 134)"
3	• "Hard Drive Problems (on page 155)" • Controller documentation
4	"HP Insight Diagnostics (on page 115)"
5	• "Loose Connections (on page 144)" • "CD-ROM and DVD Drive Problems (on page 148)" • Controller documentation
6	Server user guide or setup and installation guide, located on the Documentation CD or the HP website (http://www.hp.com/products/servers/platforms)
7	• "Operating System Problems (on page 173)" • "Contacting HP Technical Support or an Authorized Reseller (on page 182)"
8	• "Hardware Problems (on page 141)" • Server maintenance and service guide, located on the Documentation CD or the HP website (http://www.hp.com/products/servers/platforms)
9	"General Diagnosis Flowchart (on page 129)"

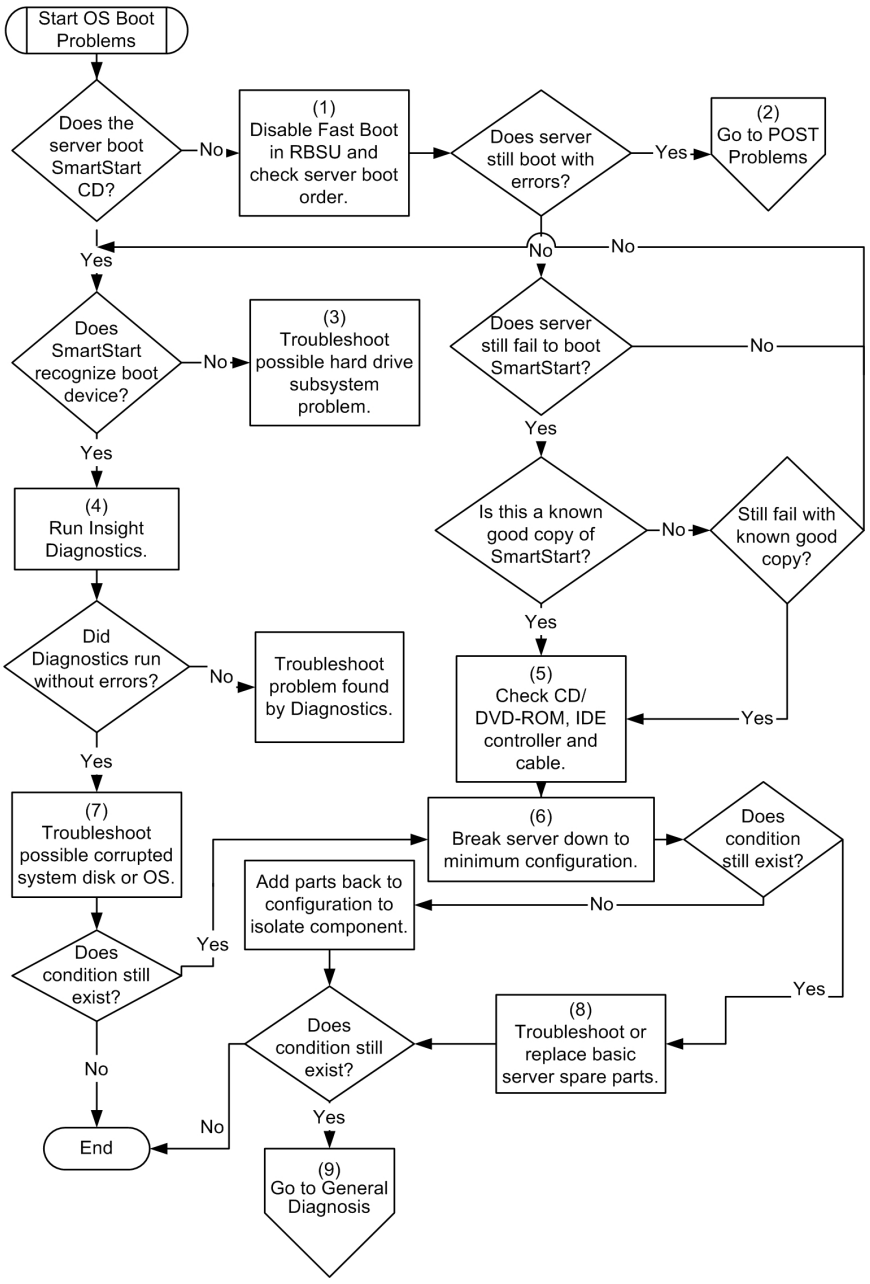
Start OS Boot Problems
Does the server boot SmartStart CD?
No
(1) Disable Fast Boot in RBSU and check server boot order.
Does server still boot with errors?
Yes
(2) Go to POST Problems
No
Yes
No
Does SmartStart recognize boot device?
No
(3) Troubleshoot possible hard drive subsystem problem.
Does server still fail to boot SmartStart?
No
Yes
Yes
(4) Run Insight Diagnostics.
Is this a known good copy of SmartStart?
No
Still fail with known good copy?
Yes
Did Diagnostics run without errors?
No
Troubleshoot problem found by Diagnostics.
(5) Check CD/ DVD-ROM, IDE controller and cable.
Yes
Yes
(7) Troubleshoot possible corrupted system disk or OS.
(6) Break server down to minimum configuration.
Does condition still exist?
Add parts back to configuration to isolate component.
No
Yes
Does condition still exist?
Yes
(8) Troubleshoot or replace basic server spare parts.
Does condition still exist?
No
No
Yes
End
(9) Go to General Diagnosis

Server Fault Indications Flowchart

Symptoms:

- Server boots, but a fault event is reported by Insight Management Agents (on page 111)
- Server boots, but the internal health LED or external health LED is red or amber

  NOTE: For the location of server LEDs and information on their statuses, refer to the server documentation.

Possible causes:

- Improperly seated or faulty internal or external component
- Unsupported component installed
- Redundancy failure
- System overtemperature condition

Item	Refer to
1	"Management Agents (on page 111)"
2	• "Integrated Management Log (on page 116)" • "Event List Error Messages (on page 253)"
3	Server user guide or setup and installation guide, located on the Documentation CD or the HP website (http://www.hp.com/products/servers/platforms)
4	System Management Homepage at https://localhost:2381 (https://localhost:2381)
5	"Power-On Problems ("Power-On Problems Flowchart" on page 131)"
6	• "Hard Drive Problems (on page 155)" • Server maintenance and service guide, located on the Documentation CD or the HP website (http://www.hp.com/products/servers/platforms)
7	"HP Insight Diagnostics (on page 115)"

Item	Refer to
8	• "Hardware Problems (on page 141)" • Server maintenance and service guide, located on the Documentation CD or the HP website (http://www.hp.com/products/servers/platforms)

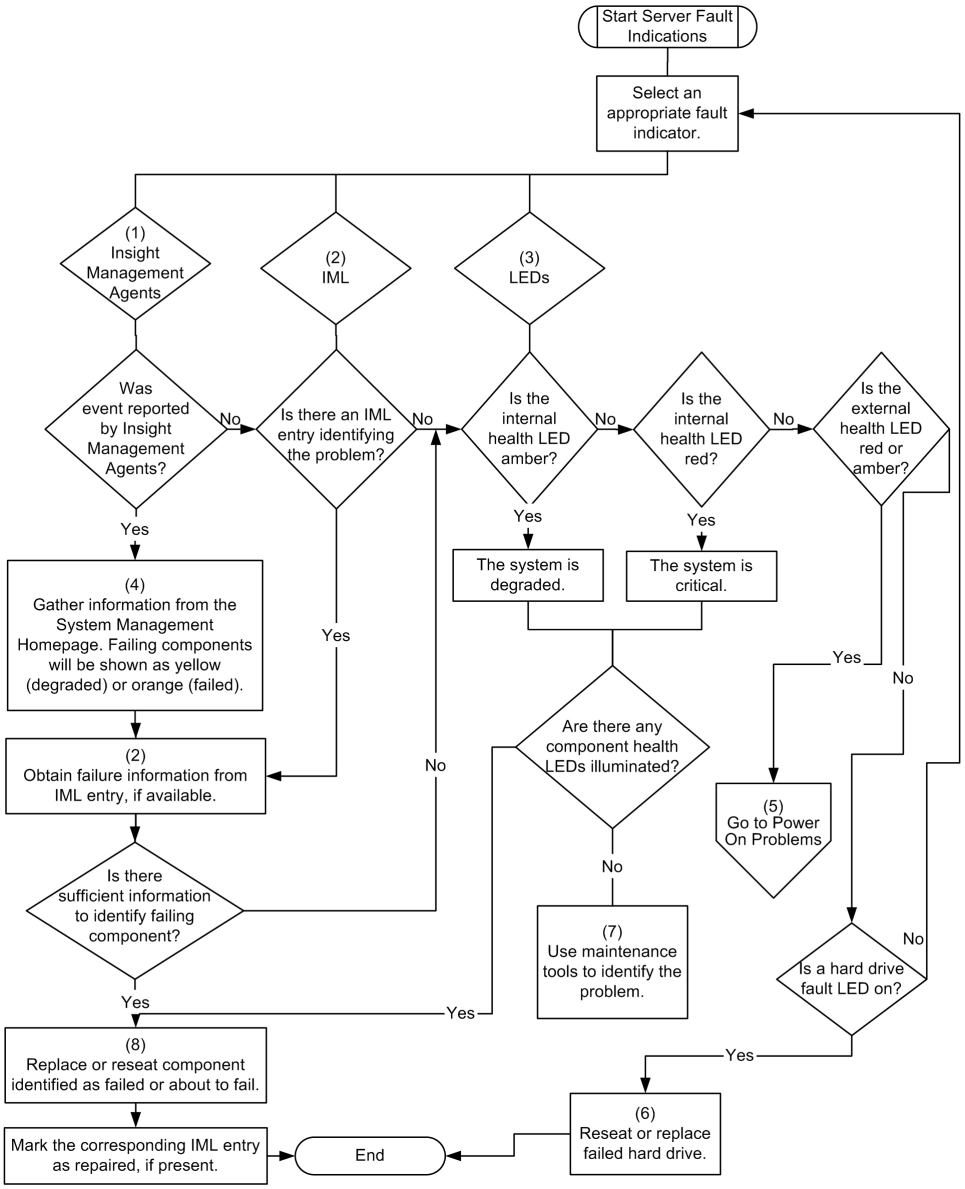
Start Server Fault Indications
Select an appropriate fault indicator.
(1) Insight Management Agents
(2) IML
(3) LEDs
Was event reported by Insight Management Agents?
No
Is there an IML entry identifying the problem?
No
Is the internal health LED amber?
No
Is the internal health LED red?
No
Is the external health LED red or amber?
Yes
Yes
Yes
Yes
Yes
The system is degraded.
The system is critical.
(4) Gather information from the System Management Homepage. Failing components will be shown as yellow (degraded) or orange (failed).
(2) Obtain failure information from IML entry, if available.
Is there sufficient information to identify failing component?
No
Yes
Are there any component health LEDs illuminated?
No
Yes
(5) Go to Power On Problems
(7) Use maintenance tools to identify the problem.
Is a hard drive fault LED on?
No
Yes
(8) Replace or reseat component identified as failed or about to fail.
Mark the corresponding IML entry as repaired, if present.
End
(6) Reseat or replace failed hard drive.

Procedures for All ProLiant Servers

The procedures in this section are comprehensive and include steps about or references to hardware features that may not be supported by the server you are troubleshooting.

Hardware Problems

Power Problems (on page 141)

General Hardware Problems (on page 143)

Internal System Problems (on page 148)

External Device Problems (on page 162)

Power Problems

List of Problems:

Power Source Problems.....141
Power Supply Problems.....142
UPS Problems.....142

Power Source Problems

Action:

1. Press the Power On/Standby button to be sure it is on. If the server has a Power On/Standby button that returns to its original position after being pressed, be sure you press the switch firmly.
2. Plug another device into the grounded power outlet to be sure the outlet works. Also, be sure the power source meets applicable standards.
3. Replace the power cord with a known functional power cord to be sure it is not faulty.
4. Replace the power strip with a known functional power strip to be sure it is not faulty.

5. Have a qualified electrician check the line voltage to be sure it meets the required specifications.
6. Be sure the proper circuit breaker is in the On position.

Power Supply Problems

Action:

1. Be sure no loose connections (on page 144) exist.
2. If the power supplies have LEDs, be sure they indicate that each power supply is working properly. Refer to the server documentation. If LEDs indicate a problem with a power supply, replace the power supply.
3. Be sure the system has enough power, particularly if you recently added hardware, such as hard drives. Additional power supplies may be required. Check the system information from the IML and use the server documentation for product-specific information.

UPS Problems

List of Problems:

UPS is not working properly 142
Low battery warning is displayed 143
One or more LEDs on the UPS is red 143

UPS is not working properly

Action:

1. Be sure the UPS batteries are charged to the proper level for operation. Refer to the UPS documentation for details.
2. Be sure the UPS power switch is in the On position. Refer to the UPS documentation for the location of the switch.
3. Be sure the UPS software is updated to the latest version. Use the Power Management software located on the Power Management CD.
4. Be sure the correct power cord is the correct type for the UPS and the country in which the server is located. Refer to the UPS reference guide for specifications.
5. Be sure the line cord is connected.

6. Be sure each circuit breaker is in the On position, or replace the fuse if needed. If this occurs repeatedly, contact an authorized service provider.
7. Check the UPS LEDs to be sure a battery or site wiring problem has not occurred. Refer to the UPS documentation.
8. If the UPS sleep mode is initiated, disable sleep mode for proper operation. The UPS sleep mode can be turned off through the configuration mode on the front panel.
9. Change the battery to be sure damage was not caused by excessive heat, particularly if a recent air conditioning outage has occurred.

   NOTE: The optimal operating temperature for UPS batteries is 25°C (77°F). For approximately every 8°C to 10°C (16°F to 18°F) average increase in ambient temperature above the optimal temperature, battery life is reduced by 50 percent.

Low battery warning is displayed

Action:

1. Plug the UPS into an AC grounded outlet for at least 24 hours to charge the batteries, and then test the batteries. Replace the batteries if necessary.
2. Be sure the alarm is set appropriately by changing the amount of time given before a low battery warning. Refer to the UPS documentation for instructions.

One or more LEDs on the UPS is red

Action: Refer to the UPS documentation for instructions regarding the specific LED to determine the cause of the error.

General Hardware Problems

List of Problems:

Loose Connections 144
Problems with New Hardware 144
Unknown Problem 146
Third-Party Device Problems 146
Testing the Device 147

Loose Connections

Action:

- Be sure all power cords are securely connected.
- Be sure all cables are properly aligned and securely connected for all external and internal components.
- Remove and check all data and power cables for damage. Be sure no cables have bent pins or damaged connectors.
- If a fixed cable tray is available for the server, be sure the cords and cables connected to the server are correctly routed through the tray.
- Be sure each device is properly seated.
- If a device has latches, be sure they are completely closed and locked.
- Check any interlock or interconnect LEDs that may indicate a component is not connected properly.
- If problems continue to occur, remove and reinstall each device, checking the connectors and sockets for bent pins or other damage.

Problems with New Hardware

Action:

1. Refer to the server documentation to be sure the hardware being installed is a supported option on the server. Remove unsupported hardware.
2. Refer to the release notes included with the hardware to be sure the problem is not caused by a last minute change to the hardware release. If no documentation is available, refer to the HP support website (http://www.hp.com/support).
3. Be sure the new hardware is installed properly. Refer to the device, server, and operating system documentation to be sure all requirements are met.

   Common problems include:

   – Incomplete population of a memory bank

   – Installation of a processor without a corresponding PPM

- Installation of a SCSI device without termination or without proper ID settings
- Setting of an IDE device to Master/Slave when the other device is set to Cable Select
- Connection of the data cable, but not the power cable, of a new device

4. Be sure no memory, I/O, or interrupt conflicts exist.
5. Be sure no loose connections (on page 144) exist.
6. Be sure all cables are connected to the correct locations and are the correct lengths. For more information, refer to the server documentation.
7. Be sure other components were not unseated accidentally during the installation of the new hardware component.
8. Be sure all necessary software updates, such as device drivers, ROM updates, and patches, are installed and current. For example, if you are using a Smart Array controller, you need the latest Smart Array Controller device driver.
9. Be sure all device drivers are the correct ones for the hardware. Uninstall any incorrect drivers before installing the correct drivers.
10. Run RBSU after boards or other options are installed or replaced to be sure all system components recognize the changes. If you do not run the utility, you may receive a POST error message indicating a configuration error. After you check the settings in RBSU, save and exit the utility, and then restart the server. Refer to the *HP ROM-Based Setup Utility User Guide* for more information.
11. Be sure all switch settings are set correctly. For additional information about required switch settings, refer to the labels located on the inside of the server access panel or the server documentation.
12. Be sure all boards are properly installed in the server.
13. Run Insight Diagnostics ("HP Insight Diagnostics" on page 115) to see if it recognizes and tests the device.
14. Uninstall the new hardware.

Unknown Problem

Action:

1. Disconnect power to the server.
2. Following the guidelines and cautionary information in the server documentation, strip the server to its most basic configuration by removing every card or device that is not necessary to start the server. Keep the monitor connected to view the server startup process.
3. Reconnect power, and then power the system on.
   - If the video does not work, refer to "Video Problems (on page 163)."

     CAUTION: Only authorized technicians trained by HP should attempt to remove the system board. If you believe the system board requires replacement, contact HP Technical Support before proceeding.
   - If the system fails in this minimum configuration, one of the primary components has failed. If you have already verified that the processor, PPM, power supply, and memory are working before getting to this point, replace the system board. If not, be sure each of those components is working.
   - If the system boots and video is working, add each component back to the server one at a time, restarting the server after each component is added to determine if that component is the cause of the problem. When adding each component back to the server, be sure to disconnect power to the server and follow the guidelines and cautionary information in the server documentation.

Third-Party Device Problems

Action:

1. Refer to the server and operating system documentation to be sure the server and operating system support the device.
2. Be sure the latest device drivers ("Maintaining Current Drivers" on page 178) are installed.

3. Refer to the device documentation to be sure the device is properly installed. For example, a third-party PCI or PCI-X board may be required to be installed on the primary PCI or PCI-X bus, respectively.

Testing the Device

Action:

1. Uninstall the device.

   If the server works with the device removed and uninstalled, either a problem exists with the device, the server does not support the device, or a conflict exists with another device.

2. If the device is the only device on a bus, be sure the bus works by installing a different device on the bus.

3. Restarting the server each time to determine if the device is working, move the device:

   a. To a different slot on the same bus (not applicable for PCI Express)

   b. To a PCI, PCI-X, or PCI Express slot on a different bus

   c. To the same slot in another working server of the same or similar design

   If the board works in any of these slots, either the original slot is bad or the board was not properly seated. Reinsert the board into the original slot to verify.

4. If you are testing a board (or a device that connects to a board):

   a. Test the board with all other boards removed.

   b. Test the server with only that board removed.

   

   CAUTION: Clearing NVRAM deletes the configuration information. Refer to the server documentation for complete instructions before performing this operation or data loss could occur.

5. Clearing NVRAM can resolve various problems. Clear the NVRAM, but do not use the backup .SCI file if prompted. Have available any .CFG, .OVL, or .PCF files that are required.

Internal System Problems

List of Problems:

CD-ROM and DVD Drive Problems....148
DAT Drive Problems....149
Diskette Drive Problems....150
DLT Drive Problems....152
Fan Problems....154
Hard Drive Problems....155
Memory Problems....157
PPM Problems....160
Processor Problems....160

CD-ROM and DVD Drive Problems

List of Problems:

System does not boot from the drive....148
Data read from the drive is inconsistent, or drive cannot read data....149
Drive is not detected....149

System does not boot from the drive

Action:

1. Be sure the drive boot order in RBSU is set so that the server boots from the CD-ROM drive first.
2. If the CD-ROM drive jumpers are set to Cable Select (the factory default), be sure the CD-ROM drive is installed as device 0 on the cable so that it is in position for the server to boot from the drive.
3. Be sure no loose connections (on page 144) exist.
4. Be sure the media from which you are attempting to boot is not damaged and is a bootable CD.
5. If attempting to boot from a USB CD-ROM drive:
   - Refer to the operating system and server documentation to be sure both support booting from a USB CD-ROM drive.
   - Be sure legacy support for a USB CD-ROM drive is enabled in RBSU.

Data read from the drive is inconsistent, or drive cannot read data

Action:

1. Clean the drive and media.
2. If a paper or plastic label has been applied to the surface of the CD or DVD in use, remove the label and any adhesive residue.
3. Be sure the inserted CD or DVD format is valid for the drive. For example, be sure you are not inserting a DVD into a drive that only supports CDs.

Drive is not detected

Action:

1. Be sure no loose connections (on page 144) exist.
2. Refer to the drive documentation to be sure cables are connected as required.
3. Be sure the cables are working properly. Replace with known functional cables to test whether the original cables were faulty.
4. Be sure the correct, current driver is installed.

DAT Drive Problems

List of Problems:

Sense error codes are displayed 149
DAT drive error or failure occurs 150
DAT drive is providing poor performance 150
Latest firmware indicates a defective tape, or head clogs occur regularly 150
Other errors are occurring 150

Sense error codes are displayed

Action: Refer to the *Troubleshooting DAT Drives* white paper for information on DAT drive sense error codes. Search for it on the HP website (http://www.hp.com).

DAT drive error or failure occurs

Action:

1. Be sure drivers, software, and firmware are upgraded to the latest revisions.
2. Clean the drive at least four times to be sure that the heads are clean and to eliminate dirty heads as the possible cause of the failure.

   DAT drives require cleaning every 8 to 25 hours of use or they may fail intermittently when using marginal or bad media. Be sure you are following the proper cleaning procedures described in the device and server documentation.

   NOTE: New DAT tapes may contain debris that will contaminate the DAT drive read/write head. If using new tapes for backup, clean the DAT drive frequently.

DAT drive is providing poor performance

Action: Be sure the drive is not being used to backup more data than is recommended for the drive. DAT drives are designed with optimum and maximum data backup sizes. Refer to the drive documentation to determine the appropriate data backup size for the drive.

Latest firmware indicates a defective tape, or head clogs occur regularly

Action: Replace the tape.

Other errors are occurring

Action: Replace the drive.

Diskette Drive Problems

List of Problems:

Diskette drive light stays on 151
A problem has occurred with a diskette transaction 151
Diskette drive cannot read a diskette 151
Drive is not found 151
Non-system disk message is displayed 151
Diskette drive cannot write to a diskette 151

Diskette drive light stays on

Action:

1. Be sure no loose connections (on page 144) exist.
2. Be sure the diskette is not damaged. Run the diskette utility on the diskette (CHKDSK on some systems).
3. Be sure the diskette is properly inserted. Remove the diskette and reinsert correctly into the drive.
4. Be sure the diskette drive is cabled properly. Refer to the server documentation.

A problem has occurred with a diskette transaction

Action: Be sure the directory structure on the diskette is not bad. Run the diskette utility to check for fragmentation (CHKDSK on some systems).

Diskette drive cannot read a diskette

Action:

1. If the diskette is not formatted, format the diskette.
2. Check the type of drive you are using and be sure you are using the correct diskette type.

Drive is not found

Action: Be sure no loose connections (on page 144) exist with the drive.

Non-system disk message is displayed

Action: Remove the non-system diskette from the drive.

Diskette drive cannot write to a diskette

Action:

1. If the diskette is not formatted, format the diskette.
2. Be sure the diskette is not write protected. If it is, use another diskette or remove the write protection.

3. Be sure you are attempting to write to the proper drive by checking the drive letter in the path statement.
4. Be sure enough space is available on the diskette.

DLT Drive Problems

List of Problems:

Server cannot write to tape 152
DLT drive failure occurs 153
DLT drive does not read tape 153
Server cannot find the DLT drive 153
An error occurs during backup, but the backup is completed 154

Server cannot write to tape

Action:

- If the drive cleaning light is on, clean the drive.

  NOTE: DLT cleaning cartridges are good for only 20 uses. If the cleaning cartridge is near that limit and the drive cleaning light is still on after running the cleaning cartridge, use a new cleaning tape to clean the drive.

- If the tape is write protected, remove the write protection. If the tape still does not work, insert another tape into the drive to see if the original tape is faulty.
- Refer to the tape drive documentation to be sure the type of tape being used is supported by the drive.
- Check each tape cartridge that has been used in the drive to verify its condition and inspect its tape leader to verify it is not damaged and is in the correct position. After you locate any bad cartridges, dispose of them. A working tape drive may drop its leader when using bad cartridges, indicating that they need replacing. If bad cartridges are found, you will need to inspect the DLT drives leader assembly.
  - To examine the cartridge take-up leader, tilt the cartridge receiver door on the front of the drive and look inside to see that the drive leader is connected to the buckling link-hook.

– To examine the drive take-up leader, tilt the cartridge receiver door on the front of the drive and look inside to see that the drive leader is connected to the buckling link-hook, which should be engaged in the leader slot.

DLT drive failure occurs

Action:

- Be sure the power and signal cables are properly connected.
- Be sure the power and signal cable connectors are not damaged.
- If the drive is connected to a nonembedded controller, be sure the controller is properly seated.

DLT drive does not read tape

Action:

- Be sure the drive is seated.
- Be sure the drive is installed properly.
- Check each tape cartridge that has been used in the drive to see if a leader was dropped. After you locate any bad cartridges, dispose of them. A working tape drive will drop the leader of a bad cartridge, indicating that the cartridge needs replacing.
- Refer to the tape drive documentation to be sure the type of tape being used is supported by the drive.

Server cannot find the DLT drive

Action:

- Be sure a device conflict does not exist. Check for duplicate SCSI IDs in use and refer to the documentation of the DLT drive and the array controller to be sure they are compatible.
- Be sure the maximum number of drives per controller has not been exceeded. Refer to the controller documentation to determine the capacity of the controller.

NOTE: It is recommended that no more than two DLT drives per bus exist.

- If using an external DLT drive that requires a SCSI terminator to be secured to the unused SCSI IN connector on the back of the drive, be sure the SCSI terminator is connected.

  DLT drives can be daisy chained, but do not connect more than three units per SCSI controller. The last DLT drive in the chain requires the SCSI terminator.

- Check cables for damaged or bent connectors.

An error occurs during backup, but the backup is completed

Action: Contact the software vendor for more information about the message. If the error does not disrupt the backup, you may be able to ignore the error.

Fan Problems

List of Problems:

General fan problems are occurring 154
Hot-plug fan problems are occurring.....155

General fan problems are occurring

Action:

1. Be sure the fans are properly seated and working.
   a. Follow the procedures and warnings in the server documentation for removing the access panels and accessing and replacing fans.
   b. Unseat, and then reseat, each fan according to the proper procedures.
   c. Replace the access panels, and then attempt to restart the server.
2. Be sure the fan configuration meets the functional requirements of the server. Refer to the server documentation.
3. Be sure no ventilation problems exist. If you have been operating the server for an extended period of time with the access panel removed, airflow may have been impeded, causing thermal damage to components. Refer to the server documentation for further requirements.

4. Be sure no POST error messages ("POST Error Messages and Beep Codes" on page 223) are displayed while booting the server that indicate temperature violation or fan failure information. Refer to the server documentation for the temperature requirements for the server.
5. Access the IML to see if any event list error messages (on page 253) are listed relating to fans.
6. Replace any required non-functioning fans and restart the server. Refer to the server documentation for specifications on fan requirements.
7. Be sure all fan slots have fans or blanks installed. Refer to the server documentation for requirements.
8. Verify the fan airflow path is not blocked by cables or other material.

Hot-plug fan problems are occurring

Action:

1. Check the LEDs to be sure the hot-plug fans are working. Refer to the server documentation for LED information.

   NOTE: For servers with redundant fans, backup fans may spin up periodically to test functionality. This is part of normal redundant fan operation.

2. Be sure no POST error messages ("POST Error Messages and Beep Codes" on page 223) are displayed.
3. Be sure hot-plug fan requirements are being met. Refer to the server documentation.

Hard Drive Problems

List of Problems:

System completes POST but hard drive fails 156
Hard drive is not recognized by the server 156
You are unable to access data 156
Server response time is slower than usual 157
No hard drives are recognized 157
A new hard drive is not recognized 157

System completes POST but hard drive fails

Action:

1. Be sure no loose connections (on page 144) exist.
2. Be sure no device conflict exists.
3. Be sure the hard drive is properly cabled and terminated if necessary.
4. Be sure the SCSI cable is working by replacing it with a known functional cable.
5. Run Insight Diagnostics ("HP Insight Diagnostics" on page 115) and replace failed components as indicated.

Hard drive is not recognized by the server

Action:

1. Check the LEDs on the hard drive to be sure they indicate normal function. Refer to the server documentation or the HP website for information on hard drive LEDs.
2. Be sure no loose connections (on page 144) exist.
3. Remove the hard drive and be sure the configuration jumpers are set properly.
4. If using an array controller, be sure the hard drive is configured in an array. Run the array configuration utility.
5. Be sure the drive is properly configured. Refer to the drive documentation to determine the proper configuration.
6. If it is a non-hot-plug drive, be sure a conflict does not exist with another hard drive. Check for SCSI ID conflicts.
7. Be sure the correct drive controller drivers are installed.

You are unable to access data

Action:

1. Be sure the files are not corrupt. Run the repair utility for the operating system.

2. Be sure no viruses exist on the server. Run a current version of a virus scan utility.

Server response time is slower than usual

Action: Be sure the hard drive is not full, and increase the amount of free space on the hard drive, if needed. It is recommended that hard drives should have a minimum of 15 percent free space.

No hard drives are recognized

Action: Be sure no power problems (on page 141) exist.

A new hard drive is not recognized

Action:

1. Be sure the drive bay is not defective by installing the hard drive in another bay.
2. If the drive has just been added, be sure the drive is supported. Refer to the server documentation or the HP website to determine drives support.
3. Run Insight Diagnostics ("HP Insight Diagnostics" on page 115) and replace failed components as indicated.

Memory Problems

List of Problems:

General memory problems are occurring 158
Server is out of memory 158
Memory count error exists..... 158
Server fails to recognize existing memory 159
Server fails to recognize new memory 159

General memory problems are occurring

Action:

- Be sure the memory meets the server requirements and is installed as required by the server. Some servers may require that memory banks be fully populated or that all memory within a memory bank must be the same size, type, and speed. Refer to the server documentation to determine if the memory is installed properly.
- Check any server LEDs that correspond to memory slots.
- If you are unsure which DIMM has failed, test each bank of DIMMs by removing all other DIMMs. Then, isolate the failed DIMM by switching each DIMM in a bank with a known working DIMM.
- Remove any third-party memory.
- Run Insight Diagnostics to test the memory.

Server is out of memory

Action:

1. Be sure the memory is configured properly. Refer to the application documentation to determine the memory configuration requirements.
2. Be sure no operating system errors are indicated.
3. Be sure a memory count error ("Memory count error exists" on page 158) did not occur. Refer to the message displaying memory count during POST.

Memory count error exists

Possible Cause: The memory modules are not installed correctly.

Action:

1. Be sure the memory modules are supported by the server. Refer to the server documentation.
2. Be sure the memory modules have been installed correctly in the right configuration. Refer to the server documentation.
3. Be sure the memory modules are properly seated.

4. Be sure no operating system errors are indicated.
5. Restart the server and check to see if the error message is still displayed.
6. Run Insight Diagnostics ("HP Insight Diagnostics" on page 115) and replace failed components as indicated.

Server fails to recognize existing memory

Action:

1. Reseat the memory.
2. Be sure the memory is configured properly. Refer to the server documentation.
3. Be sure a memory count error ("Memory count error exists" on page 158) did not occur. Refer to the message displaying memory count during POST.

Server fails to recognize new memory

Action:

1. Be sure the memory is the correct type for the server and is installed according to the server requirements. Refer to the server documentation or HP website (http://www.hp.com).
2. Be sure you have not exceeded the memory limits of the server or operating system. Refer to the server documentation.
3. Be sure no Event List error messages (on page 253) are displayed in the IML ("Integrated Management Log" on page 116).
4. Be sure the memory is properly seated.
5. Be sure no conflicts are occurring with existing memory. Run the server setup utility.
6. Test the memory by installing the memory into a known working server. Be sure the memory meets the requirements of the new server on which you are testing the memory.
7. Replace the memory. Refer to the server documentation.

PPM Problems

Action: If the PPMs are not integrated on the system board:



CAUTION: Do not operate the server for long periods without the access panel. Operating the server without the access panel results in improper airflow and improper cooling that can lead to thermal damage.

1. If applicable, check the PPM LEDs to identify if a PPM failure occurred. For information on LEDs, refer to the server documentation.
2. Reseat each PPM, and then restart the server.
3. If reseating the PPMs is not effective, remove all but one PPM, restart the server to see if the PPM is working, and then install each PPM individually, cycling power each time. Follow the warnings and cautionary information in the server documentation.

Processor Problems

Action:

Check the processor error LEDs or internal health LED to identify if a processor failure occurred.

1. If the server does not boot, the internal health LED is red, one processor is installed, and one processor error LED is illuminated:
   a. Verify the VRMs are installed for each processor.
   b. Verify the DIMMs are installed properly.
   c. Remove all adapter boards and restart the server. If the server boots, install adapter boards one at a time to determine which one prevents the server from booting.
   d. Replace processor 1. If the server restarts, the original processor has failed.
   e. If the server does not boot after following these steps, replace the system board.
2. If the server does not boot, the internal health LED is red, two processors are installed, and one processor error LED is illuminated:

a. Verify the VRMs are installed for each processor.

b. Verify the DIMMs are installed properly.

c. Remove all adapter boards and restart the server. If the server boots, install adapter boards one at a time to determine which one prevents the server from booting.

d. If the processor error LED is for processor 1, replace processor 1 with the processor in socket 2 and restart the server. If the server boots, the original processor 1 has failed and should be replaced.

e. If the processor error LED is for processor 2, remove it and restart the server. If the server boots, processor 2 has failed and should be replaced.

f. If the server does not boot after the following these steps, replace the system board.

3. If the server does not boot, the internal health LED is red, the server has two processors installed, and both processor error LEDs are illuminated:

a. Verify the VRMs are installed for each processor.

b. Verify the DIMMs are installed properly.

c. Remove all adapter boards and restart the server. If the server boots, install adapter boards one at a time to determine which one prevents the server from booting.

d. Remove processor 2 and restart the server. If the server boots, processor 2 has failed and should be replaced.

e. Replace processor 1 with the processor from socket 2, and restart the server. If the server boots, the original processor 1 has failed and should be replaced.

f. If the server does not boot after the following these steps, replace the system board.

System Open Circuits and Short Circuits

Action:

CAUTION: Do not operate the server for long periods without the access panel. Operating the server without the access panel results in improper airflow and improper cooling that can lead to thermal damage.

1. Check the server LEDs to see if any statuses indicate the source of the problem. For LED information, refer to the server documentation.
2. Remove all power sources to the server.
3. Be sure no loose connections (on page 144) exist in the area.
4. Be sure each component in the area is working. Refer to the section for each component in this guide.

If you cannot determine the problem by checking the specific area, perform each of the following actions. Restart the server after each action to see if the problem has been corrected.

- Reseat all I/O expansion boards.
- Be sure no loose connections (on page 144) exist in the rest of the server, particularly with the cables that connect to the system board.
- Be sure no foreign material exists, such as screws, bits, or slot bracket blanks, that may be short circuiting components.

External Device Problems

List of Problems:

Video Problems 163
Audio Problems 164
Printer Problems 165
Mouse and Keyboard Problems 165
Diagnostic Adapter Problems 166
Modem Problems 166
Network Controller Problems 170

Video Problems

List of Problems:

Screen is blank for more than 60 seconds after you power up the server.....163
Monitor does not function properly with energy saver features.....164
Video colors are wrong 164
Slow-moving horizontal lines are displayed 164

Screen is blank for more than 60 seconds after you power up the server

Action:

1. Be sure the monitor power cord is plugged into a working grounded (earthed) AC outlet.
2. Power up the monitor and be sure the monitor light is on, indicating that the monitor is receiving power.
3. Be sure the monitor is cabled to the intended server or KVM connection.
4. Be sure no loose connections (on page 144) exist.
   - For rack-mounted servers, check the cables to the KVM switch and be sure the switch is correctly set for the server. You may need to connect the monitor directly to the server to be sure the KVM switch has not failed.
   - For tower-model servers, check the cable connection from the monitor to the server, and then from the server to the power outlet.
5. Press any key, or type the password, and wait a few moments for the screen to activate to be sure the energy saver feature is not in effect.
6. Be sure the video driver is current. Refer to the third-party video adapter documentation for driver requirements.
7. Be sure a video expansion board, such as a Remote Insight Lights Out Edition board, has not been added to replace onboard video, making it seem like the video is not working. Disconnect the video cable from the onboard video, and then reconnect it to the video jack on the expansion board.

   NOTE: All servers automatically bypass onboard video when a video expansion board is present.

8. Press any key, or type the password, and wait a few moments for the screen to activate to be sure the power-on password feature is not in effect. You can also tell if the power-on password is enabled if a key symbol is displayed on the screen when POST completes.

   If you do not have access to the password, you must disable the power-on password by using the Password Disable switch on the system board. Refer to the server documentation.

9. If the video expansion board is installed in a PCI Hot Plug slot, be sure the slot has power by checking the power LED on the slot, if applicable. Refer to the server documentation.
10. Be sure the server and the operating system support the video expansion board.

Monitor does not function properly with energy saver features

Action: Be sure the monitor supports energy saver features, and if it does not, disable the features.

Video colors are wrong

Action:

- Be sure the 15-pin VGA cable is securely connected to the correct VGA port on the server and to the monitor.
- Be sure the monitor and any KVM switch are compatible with the VGA output of the server.

Slow-moving horizontal lines are displayed

Action: Be sure magnetic field interference is not occurring. Move the monitor away from other monitors or power transformers.

Audio Problems

Action: Be sure the server speaker is connected. Refer to the server documentation.

Printer Problems

List of Problems:

Printer does not print 165
Printer output is garbled 165

Printer does not print

Action:

1. Be sure the printer is powered up and online.
2. Be sure no loose connections (on page 144) exist.
3. Be sure the correct printer drivers are installed.

Printer output is garbled

Action: Be sure the correct printer drivers are installed.

Mouse and Keyboard Problems

Action:

1. Be sure no loose connections (on page 144) exist. If a KVM switching device is in use, be sure the server is properly connected to the switch.
   - For rack-mounted servers, check the cables to the switch box and be sure the switch is correctly set for the server.
   - For tower-model servers, check the cable connection from the input device to the server.
2. If a KVM switching device is in use, be sure all cables and connectors are the proper length and are supported by the switch. Refer to the switch documentation.
3. Be sure the current drivers for the operating system are installed.
4. Be sure the device driver is not corrupted by replacing the driver.
5. Restart the system and check whether the input device functions correctly after the server restarts.

6. Replace the device with a known working equivalent device (another similar mouse or keyboard).
   - If the problem still occurs with the new mouse or keyboard, the connector port on the system I/O board is defective. Replace the board.
   - If the problem no longer occurs, the original input device is defective. Replace the device.
7. Be sure the keyboard or mouse is connected to the correct port. Determine whether the keyboard lights flash at POST or the NumLock LED illuminates. If not, change port connections.
8. Be sure the keyboard or mouse is clean.

Diagnostic Adapter Problems

NOTE: The Diagnostic Adapter is used only with ProLiant BL servers.

Action: If the Diagnostic Adapter does not have hot-plug functionality, be sure you are not using a PS/2 keyboard or mouse. With a PS/2 keyboard or mouse, the Diagnostic Adapter cannot be connected as a hot-plug device. Connect the Diagnostic Adapter before booting the server, or switch to USB devices (if supported) to use the Diagnostic Adapter hot-plug functionality.

Modem Problems

List of Problems:

No dial tone exists 167
Modem does not connect to another modem 167
No response occurs when you type AT commands 167
AT commands are not visible 167
Data is displayed as garbled characters after the connection is established 168
Modem does not answer an incoming call 168
Modem disconnects while online 168
AT command initialization string is not working 169
Connection errors are occurring 169
You are unable to connect to an online subscription service 169
You are unable to connect at 56 Kbps 169

No dial tone exists

Action:

1. Be sure the cables are plugged in as specified in the modem documentation.
2. Connect a working telephone directly to the wall jack, and then test the line for dial tone.
3. If no dial tone is detected, the phone line is not working. Contact the local telephone company and arrange to correct the problem.

Modem does not connect to another modem

Action:

1. Be sure a dial tone exists ("No dial tone exists" on page 167).
2. Be sure the line is not in use at another extension before using it.
3. Be sure you are dialing the correct telephone number.
4. Be sure the modem on the other end is working.

No response occurs when you type AT commands

Action: Reconfigure the COM port address for the modem.

1. Be sure the communications software is set to the COM port to which the modem is connected.
2. Check IRQ settings in the software and on the modem to be sure no conflict exists.
3. Type `AT&F` at the command prompt to reset the modem to factory-default settings.
4. Be sure you are in terminal mode and not MS-DOS mode.
5. Refer to the HP website (http://www.hp.com) for a complete list of AT commands.

AT commands are not visible

Action: Set the echo command to On using the AT command `ATE`.

Data is displayed as garbled characters after the connection is established

Action:

1. Be sure both modems have the same settings, including speed, data, parity, and stop bits.
2. Be sure the software is set for the correct terminal emulation.
   a. Reconfigure the software correctly.
   b. Restart the server.
   c. Run the communications software, checking settings and making corrections where needed.
   d. Restart the server, and then reestablish the modem connection.

Modem does not answer an incoming call

Action:

1. Enable the auto-answer option in the communications software.
2. Be sure an answering machine is not answering the line before the modem is able to answer.
   a. Turn off the answering machine.

      -Or-

      Reconfigure the auto-answer option to respond in fewer rings than the answering machine.
   b. Restart the server, and then reattempt the connection.

Modem disconnects while online

Action:

1. Be sure no loose connections (on page 144) exist.
2. Be sure no line interference exists. Retry the connection by dialing the number several times. If conditions remain poor, contact the telephone company to have the line tested.
3. Be sure an incoming call is not breaking the connection due to call waiting. Disable call waiting, and then reestablish the connection.

AT command initialization string is not working

Action: Use the most basic string possible to perform the task. The default initialization string is `AT&F&C1&D2&K3`.

Connection errors are occurring

Action:

1. Check the maximum baud rate for the modem to which you are connecting, and then change the baud rate to match.
2. If the line you are accessing requires error control to be turned off, do so using the AT command `AT&Q6%C0`.
3. Be sure no line interference exists. Retry the connection by dialing the number several times. If conditions remain poor, contact the telephone company to have the line tested.
4. Be sure the modem is current and compliant with CCITT and Bell standards. Replace with a supported modem if needed.

You are unable to connect to an online subscription service

Action:

1. If the line you are accessing requires error control to be turned off, do so using the AT command `AT&Q6%C0`.
2. If the ISP you are accessing requires access at a decreased baud rate, reconfigure the communications software to correct the connection baud rate to match the ISP.
3. If this does not work, force a slower baud rate (14400 baud) with the AT command `AT&Q6N0S37=11`.

You are unable to connect at 56 Kbps

Action:

1. Find out the maximum baud rate at which the ISP connects, and change the settings to reflect this. Reattempt to connect at a lower baud rate.

2. Be sure no line interference exists. Retry the connection by dialing the number several times. If conditions remain poor, contact the telephone company to have the line tested.

Network Controller Problems

List of Problems:

Network controller is installed but not working 170
Network controller has stopped working 171
Network controller stopped working when an expansion board was added 171
Problems are occurring with the network interconnect blades 172

Network controller is installed but not working

Action:

1. Check the network controller LEDs to see if any statuses indicate the source of the problem. For LED information, refer to the network controller documentation.
2. Be sure no loose connections (on page 144) exist.
3. Be sure the network cable is working by replacing it with a known functional cable.
4. Be sure a software problem has not caused failure. Refer to the operating system documentation for guidelines on adding or replacing PCI Hot Plug devices, if applicable.
5. Be sure the server and operating system support the controller. Refer to the server and operating system documentation.
6. Be sure the controller is enabled in RBSU.
7. Check the PCI Hot Plug power LED to be sure the PCI slot is receiving power, if applicable.
8. Be sure the server ROM is up to date.
9. Be sure the controller drivers are up to date.
10. Be sure a valid IP address is assigned to the controller and that the configuration settings are correct.
11. Run Insight Diagnostics ("HP Insight Diagnostics" on page 115) and replace failed components as indicated.

Network controller has stopped working

Action:

1. Check the network controller LEDs to see if any statuses indicate the source of the problem. For LED information, refer to the network controller documentation.
2. Be sure the correct network driver is installed for the controller and that the driver file is not corrupted. Reinstall the driver.
3. Be sure no loose connections (on page 144) exist.
4. Be sure the network cable is working by replacing it with a known functional cable.
5. Check the PCI Hot Plug power LED to be sure the PCI slot is receiving power, if applicable.
6. Be sure the network controller is not damaged.
7. Run Insight Diagnostics ("HP Insight Diagnostics" on page 115) and replace failed components as indicated.

Network controller stopped working when an expansion board was added

Action:

1. Be sure no loose connections (on page 144) exist.
2. Be sure the server and operating system support the controller. Refer to the server and operating system documentation.
3. Be sure the new expansion board has not changed the server configuration, requiring reinstallation of the network driver.
   a. Uninstall the network controller driver for the malfunctioning controller in the operating system.
   b. Restart the server, run RBSU, and be sure the server recognizes the controller and resources are available for the controller.
   c. Restart the server, and then reinstall the network driver.
4. Refer to the operating system documentation to be sure the correct drivers are installed.

5. Refer to the operating system documentation to be sure that the driver parameters match the configuration of the network controller.

Problems are occurring with the network interconnect blades

Action: Be sure the network interconnect blades are properly seated and connected.

Software Problems

The best sources of information for software problems are the operating system and application software documentation, which may also point to fault detection tools that report errors and preserve the system configuration.

Other useful resources include HP Insight Diagnostics and HP SIM. Use either utility to gather critical system hardware and software information and to help with problem diagnosis.

> **IMPORTANT:** This guide provides information for multiple servers. Some information may not apply to the server you are troubleshooting. Refer to the server documentation for information on procedures, hardware options, software tools, and operating systems supported by the server.

Refer to "Software and Option Resources" for more information.

Operating Systems

Operating System Problems (on page 173)

Operating System Updates (on page 174)

Restoring to a Backed-Up Version (on page 174)

When to Reconfigure or Reload Software (on page 175)

Linux Operating Systems (on page 176)

Operating System Problems

List of Problems:

Operating system locks up....173
Errors are displayed in the error log....173
Problems occur after the installation of a service pack....173
You are unable to bind NICs during the Protocols Interview with a Factory-Installed Novell NetWare 5 operating system....173
NetWare attempts to load MEGA4 XX.HAM or 120PCI.HAM during installation, and a RILOE II board is installed....174
During installation of Sun Solaris, the system locks up or a panic error occurs....174

Operating system locks up

Action: Scan for viruses with an updated virus scan utility.

Errors are displayed in the error log

Action: Follow the information provided in the error log, and then refer to the operating system documentation.

Problems occur after the installation of a service pack

Action: Follow the instructions for updating the operating system ("Operating System Updates" on page 174).

You are unable to bind NICs during the Protocols Interview with a Factory-Installed Novell NetWare 5 operating system

Action: Be sure the packet receive buffers are set high enough. Toggle over to the console during the Protocols Interview and adjust these values to a higher setting that allows you to bind the NICs. A minimum setting of 50 buffers per port is recommended, and the maximum setting should be 125 more than the minimum. To make the setting changes:

1. Type the following commands at the System Console screen (where *XXX* is the new numeric value):

   ```
   Set Minimum Packet Receive Buffers=XXX
   ```

   ```
   Set Maximum Packet Receive Buffers=XXX
   ```

2. Add the commands to the STARTUP.NCF file.

   NOTE: When gigabit NICs are installed, the minimum buffers should be set to at least 500, and the maximum to at least 2000.

NetWare attempts to load MEGA4 XX.HAM or 120PCI.HAM during installation, and a RILOE II board is installed

Action: No action is required. This occurrence does not impact the installation of NetWare.

During installation of Sun Solaris, the system locks up or a panic error occurs

Action: Disable ACPI support in Sun Solaris. Refer to the Sun website (http://www.sun.com) for documentation on how to disable ACPI.

Operating System Updates

Use care when applying operating system updates (Service Packs, hotfixes, and patches). Before updating the operating system, read the release notes for each update. If you do not require specific fixes from the update, it is recommended that you do **not** apply the updates. Some updates overwrite files specific to HP.

If you decide to apply an operating system update:

1. Perform a full system backup.
2. Apply the operating system update, using the instructions provided.
3. Install the current drivers ("Maintaining Current Drivers" on page 178).

If you apply the update and have problems, refer to the Software and Drivers Download website (http://h18007.www1.hp.com/support/files/server) to find files to correct the problems.

Restoring to a Backed-Up Version

If you recently upgraded the operating system or software and cannot resolve the problem, you can try restoring a previously saved version of the system. Before restoring the backup, make a backup of the current system. If restoring the previous system does not correct the problem, you can restore the current set to be sure you do not lose additional functionality.

Refer to the documentation provided with the backup software.

When to Reconfigure or Reload Software

If all other options have not resolved the problem, consider reconfiguring the system. Before you take this step:

1. Weigh the projected downtime of a software reload against the time spent troubleshooting intermittent problems. It may be advantageous to start over by removing and reinstalling the problem software, or in some cases by using the System Erase Utility and reinstalling all system software.

   

   CAUTION: Perform a backup before running the System Erase Utility. The utility sets the system to its original factory state, deletes the current hardware configuration information, including array setup and disk partitioning, and erases all connected hard drives completely. Refer to the instructions for using this utility.

2. Be sure the server has adequate resources (processor speed, hard drive space, and memory) for the software.
3. Be sure the server ROM is current and the configuration is correct.
4. Be sure you have printed records of all troubleshooting information you have collected to this point.
5. Be sure you have two good backups before you start. Test the backups using a backup utility.
6. Check the operating system and application software resources to be sure you have the latest information.
7. If the last-known functioning configuration does not work, try to recover the system with operating system recovery software:
   - Microsoft® operating systems:

     Windows® 2003—Automated System Recovery Diskette. If the operating system was factory-installed, click **Start>All Programs>Accessories>System Tools** to access the backup utility. Refer to the operating system documentation for more information.

Windows® 2000—Emergency Repair Diskette. If the operating system was factory-installed, click **Start>Programs>System Tools** to access the Emergency Repair Disk Utility. Refer to the operating system documentation for more information.

- Novell NetWare—Repair traditional volumes with VREPAIR. On NetWare 5.X systems, repair NSS volumes with the NSS menu command, and on NetWare 6 systems, repair NSS volumes using the `NSS/PoolVerify` command followed by the `NSS/PoolRebuild` command, if necessary. Refer to the NetWare documentation for more information.
- Caldera UnixWare and SCO OpenServer from Caldera—Emergency boot diskette. Refer to the Caldera UnixWare or SCO OpenServer from Caldera documentation for more information.
- Sun Solaris—Device Configuration Assistant boot diskette. Refer to the Solaris documentation for more information.
- IBM OS/2—Power up the server from the startup diskettes. Refer to the OS/2 documentation for more information.
- Linux—Refer to the operating system documentation for information.

Linux Operating Systems

For troubleshooting information specific to Linux operating systems, refer to the Linux for ProLiant website (http://h18000.www1.hp.com/products/servers/linux).

Application Software Problems

List of Problems:

Software locks up 176
Errors occur after a software setting is changed 177
Errors occur after the system software is changed 177
Errors occur after an application is installed 177

Software locks up

Action:

1. Check the application log and operating system log for entries indicating why the software failed.
2. Check for incompatibility with other software on the server.
3. Check the support website of the software vendor for known problems.
4. Review log files for changes made to the server which may have caused the problem.
5. Scan the server for viruses with an updated virus scan utility.

Errors occur after a software setting is changed

Action: Check the system logs to determine what changes were made, and then change settings to the original configuration.

Errors occur after the system software is changed

Action: Change settings to the original configuration. If more than one setting was changed, change the settings one at a time to isolate the cause of the problem.

Errors occur after an application is installed

Action:

- Check the application log and operating system log for entries indicating why the software failed.
- Check system settings to determine if they are the cause of the error. You may need to obtain the settings from the server setup utility and manually set the software switches. Refer to the application documentation, the vendor website, or both.
- Check for overwritten files. Refer to the application documentation to find out which files are added by the application.
- Reinstall the application.
- Be sure you have the most current drivers ("Maintaining Current Drivers" on page 178).

Clustering Software

If the server uses cluster software, such as Microsoft® Cluster Server or Novell Cluster Services, refer to the documentation provided with the application for cluster troubleshooting information. Check the Microsoft® or Novell website for software troubleshooting information and frequently asked questions.

Run the Cluster Monitor integrated with HP SIM to collect information on cluster configurations.

Refer to the High Availability website (http://h18004.www1.hp.com/solutions/enterprise/highavailability) for a number of technical documents relating to clusters.

Maintaining Current Drivers

Depending on the operating system, drivers are available through individual download or in packages. Refer to the Software and Drivers Download website (http://h18007.www1.hp.com/support/files/server) or the SmartStart CD to find these driver files.

IMPORTANT: Always perform a backup before installing or updating device drivers.

NOTE: If you are installing drivers from the SmartStart CD, refer to the SmartStart website (http://www.hp.com/servers/smartstart) to be sure that you are using the latest version of SmartStart. For more information, refer to the documentation provided with the SmartStart CD.

NOTE: To verify the server configuration, connect to the System Management homepage and select **Version Control Agent**. The VCA gives you a list of names and versions of all installed HP drivers, Management Agents, and utilities, and whether they are up to date.

Some driver packages are also available through ActiveUpdate (http://h18000.www1.hp.com/products/servers/management/activeupdate).

NOTE: ActiveUpdate can operate only on a system running a Microsoft® Windows® operating system.

- Microsoft® operating systems—PSPs are available for servers running Microsoft® Windows NT® 4.0, and Windows® Server 2003. SSDs are also available for other versions of Microsoft® Windows® operating systems.

- Novell NetWare—PSPs are available for servers running the latest versions of Novell NetWare. SSDs are available for previous versions of the Novell NetWare operating system.
- Caldera UnixWare and SCO OpenServer from Caldera—EFSs are available for servers running Caldera and SCO operating systems.
- Sun Solaris—DUs are available for servers running the Sun Solaris operating system.
- IBM OS/2—SSDs are available for systems running the IBM OS/2 operating system.
- Linux—PSPs are available for servers running the latest Linux versions. For versions not supported by PSPs, drivers are available for individual download (http://h18000.www1.hp.com/products/servers/linux/softwaredrivers.html).

Remote ROM Flash Problems

List of Problems:

General remote ROM flash problems are occurring....179
Command-line syntax error....180
Invalid or incorrect command-line parameters....180
Access denied on target computer....180
Network connection fails on remote communication....180
Failure occurs during ROM flash....181
Target system is not supported....181

General remote ROM flash problems are occurring

Action: Be sure you follow these requirements for using the Remote ROM flash utility:

- A local administrative client system that is running the Microsoft® Windows NT® 4.0, Windows® 2000, or Windows® Server 2003 operating system
- One or more remote servers with system ROMs requiring upgrade
- An administrative user account on each target system. The administrative account must have the same username and password as the local administrative client system.

- All target systems are connected to the same network and use protocols that enable them to be seen from the administrative client.
- Each target system has a system partition that is at least 32 MB in size.
- Verification that the ROM version to which you are upgrading can be used for all the servers or array controllers that you are upgrading.
- Follow the instructions for the Remote ROM Flash procedure that accompany the software.

Command-line syntax error

If the correct command-line syntax is not used, an error message describing the incorrect syntax is displayed and the program exits. Correct the syntax, and then restart the process.

Invalid or incorrect command-line parameters

If incorrect parameters are passed into command-line options, an error message describing the invalid or incorrect parameter is displayed and the program exits (Example: Invalid source path for system configuration or ROMPaq files). Correct the invalid parameter, and then restart the process.

Access denied on target computer

If you specify a networked target computer for which you do not have administrative privileges, an error message is displayed describing the problem, and then the program exits. Obtain administrative privileges for the target computer, and then restart the process. Be sure the remote registry service is running on a Windows®-based system.

Network connection fails on remote communication

Because network connectivity cannot be guaranteed, it is possible for the administrative client to become disconnected from the target server during the ROM flash preparation. If any remote connectivity procedure fails during the ROM flash online preparation, the ROM flash does not occur for the target system. An error message describing the broken connection displays and the program exits. Attempt to ascertain and correct the cause of connection failure, and then restart the process.

Failure occurs during ROM flash

After the online flash preparation has been successfully completed, the system ROM is flashed offline. The flash cannot be interrupted during this process or the ROM image is corrupted and the server does not start. The most likely reason for failure is a loss of power to the system during the flash process. Initiate ROMPaq disaster recovery procedures.

Target system is not supported

If the target system is not listed in the supported servers list, an error message is displayed and the program exits. Only supported systems can be upgraded using the Remote ROM Flash utility. To see if the server is supported, refer to the Software and Drivers Download website (http://h18007.www1.hp.com/support/files/server).

Erasing the System



CAUTION: Perform a backup before running the System Erase Utility. The utility sets the system to its original factory state, deletes the current hardware configuration information, including array setup and disk partitioning, and erases all connected hard drives completely. Refer to the instructions for using this utility.

Run the System Erase Utility if you must erase the system for the following reasons:

- You want to install a new operating system on a server with an existing operating system.
- You want to change the operating system selection.
- You encounter a failure-causing error during the SmartStart installation.
- You encounter an error when completing the steps of a factory-installed operating system installation.

The Erase Utility can be accessed from the Software and Drivers Download website (http://h18007.www1.hp.com/support/files/server) or the Maintenance Utilities menu of the SmartStart CD.

Contacting HP

Contacting HP Technical Support or an Authorized Reseller (on page 182)

Server Information You Need (on page 183)

Contacting HP Technical Support or an Authorized Reseller

Contact HP only if, after completing the procedures described in this guide, the problem with the server remains.

> **IMPORTANT:** Collect the appropriate server information ("Server Information You Need" on page 183) and operating system information ("Operating System Information You Need" on page 184) before contacting HP for support.

For the name of the nearest HP authorized reseller:

- In the United States, call 1-800-345-1518.
- In Canada, call 1-800-263-5868.
- In other locations, refer to the HP website (http://www.hp.com).

For HP technical support:

- In North America:
  - Call 1-800-HP-INVENT (1-800-474-6836). This service is available 24 hours a day, 7 days a week. For continuous quality improvement, calls may be recorded or monitored.
  - If you have purchased a Care Pack (service upgrade), call 1-800-633-3600. For more information about Care Packs, refer to the HP website (http://www.hp.com).
- Outside North America, call the nearest HP Technical Support Phone Center. For telephone numbers for worldwide Technical Support Centers, refer to the HP website (http://www.hp.com).

Server Information You Need

Before contacting HP, collect the following:

- All information from any troubleshooting efforts to this point.
- A printed copy of the system and operating environment information and a copy of any historical data that might be relevant. If possible, obtain an electronic copy of this information to send by e-mail to a support specialist. To collect this information, run the Survey Utility (if available) and refer to the server documentation.
- A list of the system components:
  - Product, model, and serial number
  - Hardware configuration
  - Add-on boards
  - Monitor
  - Connected peripherals such as tape drives
- A list of all third-party hardware and software:
  - Complete product name and model
  - Complete company name
  - Product version
  - Driver version
- Any notes describing the details of the problem, including recent changes to the system, the events that triggered or are associated with the problem, and the steps needed to reproduce the problem.
- Notes on anything nonstandard about the server setup.
- Operating system information ("Operating System Information You Need" on page 184)

Operating System Information You Need

Depending on the problem, you may be asked for certain pieces of information. Be prepared to access the information listed in the following sections, based on operating system used.

Microsoft Operating Systems

Collect the following information:

- Whether the operating system was factory installed
- Operating system version number
- A current copy of the following files:
  - WinMSD (Msinfo32.exe on Microsoft® Windows® 2000 systems)
  - Boot.ini
  - Memory.dmp
  - Event logs
  - Dr. Watson log (drwtsn32.log) if a user mode application, such as the Insight Agents, is having a problem
  - IRQ and I/O address information in text format
- An updated Emergency Repair Diskette
- If HP drivers are installed:
  - Version of the PSP used
  - List of drivers from the PSP
- The drive subsystem and file system information:
  - Number and size of partitions and logical drives
  - File system on each logical drive
- Current level of Microsoft® Windows® Service Packs and Hotfixes installed
- A list of each third-party hardware component installed, with the firmware revision

- A list of each third-party software component installed, with the version
- A detailed description of the problem and any associated error messages

Linux Operating Systems

Collect the following information:

- Operating system distribution and version

  Look for a file named /etc/*distribution*-release (for example, /etc/redhat-release)
- Kernel version in use
- Output from the following commands (performed by root):
  - lspci -v
  - uname -a
  - cat /proc/meminfo
  - cat /proc/cpuinfo
  - rpm -ga
  - dmesg
  - lsmod
  - ps -ef
  - ifconfig -a
  - chkconfig -list
  - mount
- Contents of the following files:
  - /var/log/messages
  - /etc/modules.conf or etc/conf.modules
  - /etc/lilo.conf or /etc/grub.conf
  - /etc/fstab
- If HP drivers are installed:

  - Version of the PSP used
  - List of drivers from the PSP (/var/log/hppldu.log)
- A list of each third-party hardware component installed, with the firmware revisions
- A list of each third-party software component installed, with the versions
- A detailed description of the problem and any associated error messages

Novell NetWare Operating Systems

Collect the following information:

- Whether the operating system was factory installed
- Operating system version number
- Printouts or electronic copies (to e-mail to a support technician) of AUTOEXEC.NCF, STARTUP.NCF, and the system directory
- A list of the modules. Use CONLOG.NLM to identify the modules and to check whether errors occur when the modules attempt to load.
- A list of any SET parameters that are different from the NetWare default settings
- A list of the drivers and NLM files used on the server, including the names, versions, dates, and sizes (can be taken directly from the CONFIG.TXT or SURVEY.TXT files)
- If HP drivers are installed:
  - Version of the PSP used
  - List of drivers from the PSP
- Printouts or electronic copies (to e-mail to a support technician) of:
  - SYS:SYSTEM\SYS$LOG.ERR
  - SYS:SYSTEM\ABEND.LOG
  - SYS:ETC\CPQLOG.LOG
  - SYS:SYSTEM\CONFIG.TXT

  - SYS:SYSTEM\SURVEY.TXT
- Current patch level
- A list of each third-party hardware component installed, with the firmware revisions
- A list of each third-party software component installed, with the versions
- A detailed description of the problem and any associated error messages

SCO Operating Systems

Collect the following information:

- Installed system software versions (TCP/IP, VP/Ix)
- Process status at time of failure, if possible
- Printouts or electronic copies (to e-mail to a support technician) of:
  - Output of `/etc/hwconfig` command
  - Output of `/usr/bin/swconfig` command
  - Output of `/etc/ifconfig` command
  - /etc/conf/cf.d/sdevice
  - /etc/inittab
  - /etc/conf/cf.d/stune
  - /etc/conf/cf.d/config.h
  - /etc/conf/cf.d/sdevice
  - /var/adm/messages (if PANIC messages are displayed)
- If HP drivers are installed:
  - Version of the EFS used
  - List of drivers from the EFS
- If management agents are installed, version number of the agents
- System dumps, if they can be obtained (in case of panics)

- A list of each third-party hardware component installed, with the firmware revisions
- A list of each third-party software component installed, with the versions
- A detailed description of the problem and any associated error messages

IBM OS/2 Operating Systems

Collect the following information:

- Operating system version number and printouts or electronic copies (to e-mail to a support technician) of:
  - IBMLAN.INI
  - PROTOCOL.INI
  - CONFIG.SYS
  - STARTUP.CMD
  - SYSLEVEL information in detail
  - TRAPDUMP information (if a TRAP error occurs)
- A directory listing of:
  - C:\
  - C:\OS2
  - C:\OS2\BOOT
  - HPFS386.INI (for Advanced or Advanced with SMP)
- If HP drivers are installed:
  - Version of the SSD used
  - List of drivers from the SSD
  - Versions of the OS/2 Management Insight Agents, CPQB32.SYS, and OS/2 Health Driver use
- The drive subsystem and file system information:
  - Number and size of partitions and logical drives

  - File system on each logical drive
- Warp Server version used and:
  - Whether Entry, Advanced, Advanced with SMP, or e-Business
  - All services running at the time the problem occurred
- A list of each third-party hardware component installed, with the firmware revisions
- A list of each third-party software component installed, with the versions
- A detailed description of the problem and any associated error messages

Sun Solaris Operating Systems

Collect the following information:

- Operating system version number
- Type of installation selected: Interactive, WebStart, or Customer JumpStart
- Which software group selected for installation: End User Support, Entire Distribution, Developer System Support, or Core System Support
- If HP drivers are installed with a DU:
  - DU number
  - List of drivers in the DU diskette
- The drive subsystem and file system information:
  - Number and size of partitions and logical drives
  - File system on each logical drive
- A list of all third-party hardware and software installed, with versions
- A detailed description of the problem and any associated error messages
- Printouts or electronic copies (to e-mail to a support technician) of:
  - /usr/sbin/crash (accesses the crash dump image at /var/crash/$hostname)
  - /var/adm/messages
  - /etc/vfstab

– /usr/sbin/prtconf

Error Messages

ADU Error Messages (on page 190)

POST Error Messages ("POST Error Messages and Beep Codes" on page 223)

Event List Error Messages (on page 253)

ADU Error Messages

List of Messages:

Introduction to ADU Error Messages....193
Accelerator Board not Detected....193
Accelerator Error Log....194
Accelerator Parity Read Errors: X....194
Accelerator Parity Write Errors: X....194
Accelerator Status: Cache was Automatically Configured During Last Controller Reset....194
Accelerator Status: Data in the Cache was Lost...194
Accelerator Status: Dirty Data Detected has Reached Limit....195
Accelerator Status: Dirty Data Detected....195
Accelerator Status: Excessive ECC Errors Detected in at Least One Cache Line...195
Accelerator Status: Excessive ECC Errors Detected in Multiple Cache Lines...195
Accelerator Status: Obsolete Data Detected....196
Accelerator Status: Obsolete Data was Discarded....196
Accelerator Status: Obsolete Data was Flushed (Written) to Drives....196
Accelerator Status: Permanently Disabled....196
Accelerator Status: Possible Data Loss in Cache....197
Accelerator Status: Temporarily Disabled....197
Accelerator Status: Unrecognized Status....197
Accelerator Status: Valid Data Found at Reset....197
Accelerator Status: Warranty Alert....197
Adapter/NVRAM ID Mismatch....198
Array Accelerator Battery Pack X not Fully Charged....198
Array Accelerator Battery Pack X Below Reference Voltage (Recharging)....198
Board in Use by Expand Operation....198
Board not Attached....198

Cache Has Been Disabled Because ADG Enabler Dongle is Broken or Missing 199
Cache Has Been Disabled; Likely Caused By a Loose Pin on One of the RAM Chips 199
Configuration Signature is Zero 199
Configuration Signature Mismatch 199
Controller Communication Failure Occurred 200
Controller Detected. NVRAM Configuration not Present 200
Controller Firmware Needs Upgrading 200
Controller is Located in Special "Video" Slot 200
Controller Is Not Configured 201
Controller Reported POST Error. Error Code: X 201
Controller Restarted with a Signature of Zero 201
Disable Command Issued 201
Drive (Bay) X Firmware Needs Upgrading 202
Drive (Bay) X has Insufficient Capacity for its Configuration 202
Drive (Bay) X has Invalid M&P Stamp 202
Drive (Bay) X Has Loose Cable 202
Drive (Bay) X is a Replacement Drive 203
Drive (Bay) X is a Replacement Drive Marked OK 203
Drive (Bay) X is Failed 203
Drive (Bay) X is Undergoing Drive Recovery 203
Drive (Bay) X Needs Replacing 203
Drive (Bay) X Upload Code Not Readable 204
Drive (Bay) X Was Inadvertently Replaced 204
Drive Monitoring Features Are Unobtainable 204
Drive Monitoring is NOT Enabled for SCSI Port X Drive ID Y 204
Drive Time-Out Occurred on Physical Drive Bay X 205
Drive X Indicates Position Y 205
Duplicate Write Memory Error 205
Error Occurred Reading RIS Copy from SCSI Port X Drive ID 205
FYI: Drive (Bay) X is Third-Party Supplied 205
Identify Logical Drive Data did not Match with NVRAM 206
Insufficient Adapter Resources 206
Inter-Controller Link Connection Could Not Be Established 206
Less Than 75% Batteries at Sufficient Voltage 206
Less Than 75% of Batteries at Sufficient Voltage Battery Pack X Below Reference Voltage 207
Logical Drive X Failed Due to Cache Error 207
Logical Drive X Status = Failed 207
Logical Drive X Status = Interim Recovery (Volume Functional, but not Fault Tolerant) 208
Logical Drive X Status = Loose Cable Detected 208
Logical Drive X Status = Overheated 208

Logical Drive X Status = Overheating 208
Logical Drive X Status = Recovering (rebuilding data on a replaced drive) 209
Logical Drive X Status = Wrong Drive Replaced 209
Loose Cable Detected - Logical Drives May Be Marked FAILED Until Corrected....209
Mirror Data Miscompare 209
No Configuration for Array Accelerator Board....210
NVRAM Configuration Present, Controller not Detected....210
One or More Drives is Unable to Support Redundant Controller Operation 210
Other Controller Indicates Different Hardware Model....210
Other Controller Indicates Different Firmware Version....210
Other Controller Indicates Different Cache Size....211
RIS Copies Between Drives Do Not Match 211
SCSI Port X Drive ID Y failed - REPLACE (failure message) 211
SCSI Port X, Drive ID Y Firmware Needs Upgrading 211
SCSI Port X, Drive ID Y Has Exceeded the Following Threshold(s)....212
SCSI Port X, Drive ID Y is not Stamped for Monitoring....212
SCSI Port X, Drive ID Y May Have a Loose Connection... 212
SCSI Port X, Drive ID Y RIS Copies Within This Drive Do Not Match 213
SCSI Port X, Drive ID Y...S.M.A.R.T. Predictive Failure Errors Have Been Detected in the Factory Monitor and Performance Data... 213
SCSI Port X, Drive ID Y...S.M.A.R.T. Predictive Failure Errors Have Been Detected in the Power Monitor and Performance Data... 213
SCSI Port X, Drive ID Y Was Replaced On a Good Volume: (failure message) 213
Set Configuration Command Issued....214
Soft Firmware Upgrade Required....214
Storage Enclosure on SCSI Bus X has a Cabling Error (Bus Disabled)... 214
Storage Enclosure on SCSI Bus X Indicated a Door Alert....214
Storage Enclosure on SCSI Bus X Indicated a Power Supply Failure... 214
Storage Enclosure on SCSI Bus X Indicated an Overheated Condition....215
Storage Enclosure on SCSI Bus X is Unsupported with its Current Firmware Version... 215
Storage Enclosure on SCSI Bus X Indicated that the Fan Failed... 215
Storage Enclosure on SCSI Bus X Indicated that the Fan is Degraded....216
Storage Enclosure on SCSI Bus X Indicated that the Fan Module is Unplugged... 216
Storage Enclosure on SCSI Bus X - Wide SCSI Transfer Failed....216
Swapped Cables or Configuration Error Detected. A Configured Array of Drives... 216
Swapped Cables or Configuration Error Detected. A Drive Rearrangement... 217
Swapped Cables or Configuration Error Detected. An Unsupported Drive Arrangement Was Attempted... 217
Swapped Cables or Configuration Error Detected. The Cables Appear To Be Interchanged... .218
Swapped Cables or Configuration Error Detected. The Configuration Information on the

Attached Drives... 218
Swapped Cables or Configuration Error Detected. The Maximum Logical Volume Count X...219
System Board is Unable to Identify which Slots the Controllers are in 219
This Controller Can See the Drives but the Other Controller Can't 220
The Redundant Controllers Installed are not the Same Model... 220
This Controller Can't See the Drives but the Other Controller Can 220
Unable to Communicate with Drive on SCSI Port X, Drive ID Y 220
Unable to Retrieve Identify Controller Data. Controller May be Disabled or Failed....221
Unknown Disable Code....221
Unrecoverable Read Error 221
Warning Bit Detected 221
WARNING - Drive Write Cache is Enabled on X....222
WARNING: Storage Enclosure on SCSI Bus X Indicated it is Operating in Single Ended Mode... 222
Write Memory Error....222
Wrong Accelerator 223

Introduction to ADU Error Messages

This section contains a complete alphabetical list of all ADU ("Array Diagnostic Utility" on page 115) error messages.

IMPORTANT: This guide provides information for multiple servers. Some information may not apply to the server you are troubleshooting. Refer to the server documentation for information on procedures, hardware options, software tools, and operating systems supported by the server.



WARNING: To avoid potential problems, ALWAYS read the warnings and cautionary information in the server documentation before removing, replacing, reseating, or modifying system components.

Accelerator Board not Detected

Description: Array controller did not detect a configured array accelerator board.

Action: Install an array accelerator board on an array controller. If an array accelerator board is installed, check for proper seating on the array controller board.

Accelerator Error Log

Description: List of the last 32 parity errors on transfers to or from the memory on the array accelerator board. Displays starting memory address, transfer count, and operation (read and write).

Action: If many parity errors are listed, you may need to replace the array accelerator board.

Accelerator Parity Read Errors: X

Description: Number of times that read memory parity errors were detected during transfers from memory on array accelerator board.

Action: If many parity errors occurred, you may need to replace the array accelerator board.

Accelerator Parity Write Errors: X

Description: Number of times that write memory parity errors were detected during transfers to memory on the array accelerator board.

Action: If many parity errors occurred, you may need to replace the array accelerator board.

Accelerator Status: Cache was Automatically Configured During Last Controller Reset

Description: Cache board was replaced with one of a different size.

Action: No action is required.

Accelerator Status: Data in the Cache was Lost...

...due to some reason other than the battery being discharged.

Description: Data in cache was lost, but not because of the battery being discharged.

Action: Be sure the array accelerator is properly seated. If the error persists, you may need to replace the array accelerator.

Accelerator Status: Dirty Data Detected has Reached Limit...

...Cache still enabled, but writes no longer being posted.

Description: Number of cache lines containing dirty data that cannot be flushed (written) to the drives has reached a preset limit. The cache is still enabled, but writes are no longer being posted. This problem usually occurs when a problem with the drive or drives occurs.

Action: Resolve the problem with the drive or drives. The controller can then write the dirty data to the drives. Posted-writes operations are restored.

Accelerator Status: Dirty Data Detected...

...Unable to write dirty data to drives

Description: At least one cache line contains dirty data that the controller has been unable to flush (write) to the drives. This problem usually occurs when a problem with the drive or drives occurs.

Action: Resolve the problem with the drive or drives. The controller can then write the dirty data to the drives.

Accelerator Status: Excessive ECC Errors Detected in at Least One Cache Line...

...As a result, at least one cache line is no longer in use.

Description: At least one line in the cache is no longer in use due to excessive ECC errors detected during use of the memory associated with that cache line.

Action: Consider replacing the cache. If cache replacement is not done, the remaining cache lines generally continue to operate properly.

Accelerator Status: Excessive ECC Errors Detected in Multiple Cache Lines...

...As a result, the cache is no longer in use.

Description: The number of cache lines experiencing excessive ECC errors has reached a preset limit. Therefore, the cache has been shut down.

Action:

1. Reseat the cache to the controller.
2. If the problem persists, replace the cache.

Accelerator Status: Obsolete Data Detected

Description: During reset initialization, obsolete data was found in the cache due to the drives being moved and written to by another controller.

Action: No action is required. The controller either writes the data to the drives or discards the data completely.

Accelerator Status: Obsolete Data was Discarded

Description: During reset initialization, obsolete data was found in the cache, and was discarded (not written to the drives).

Action: No action is required.

Accelerator Status: Obsolete Data was Flushed (Written) to Drives

Description: During reset initialization, obsolete data was found in the cache. The obsolete data was written to the drives, but newer data may have been overwritten.

Action: If newer data was overwritten, you may need to restore newer data; otherwise, normal operation should continue.

Accelerator Status: Permanently Disabled

Description: Array accelerator board has been permanently disabled. It will remain disabled until it is reinitialized using ACU.

Action: Check the Disable Code field. Run ACU to reinitialize the array accelerator board.

Accelerator Status: Possible Data Loss in Cache

Description: Possible data loss was detected during power-up due to all batteries being below sufficient voltage level and no presence of the identification signatures on the array accelerator board.

Action: No way exists to determine if dirty or bad data was in the cache and is now lost.

Accelerator Status: Temporarily Disabled

Description: Array accelerator board has been temporarily disabled.

Action: Check the Disable Code field.

Accelerator Status: Unrecognized Status

Description: A status was returned from the array accelerator board that ADU does not recognize.

Action: Obtain the latest version of ADU.

Accelerator Status: Valid Data Found at Reset

Description: Valid data was found in posted-write memory at reinitialization. Data will be flushed to disk.

Action: No error or data loss condition exists. No action is required.

Accelerator Status: Warranty Alert

Description: Catastrophic problem exists with array accelerator board. Refer to other messages on Diagnostics screen for exact meaning of this message.

Action: Replace the array accelerator board.

Adapter/NVRAM ID Mismatch

Description: EISA NVRAM has an ID for a different controller from the one physically present in the slot.

Action: Run the server setup utility.

Array Accelerator Battery Pack X not Fully Charged

Description: Battery is not fully charged.

Action: If 75% of the batteries present are fully charged, the array accelerator is fully operational. If more than 75% of the batteries are **not** fully charged, allow 36 hours to recharge them.

Array Accelerator Battery Pack X Below Reference Voltage (Recharging)

Description: Battery pack on the array accelerator is below the required voltage levels.

Action: Replace the array accelerator board if the batteries do not recharge within 36 powered-on hours.

Board in Use by Expand Operation

Description: Array accelerator memory is in use by an expand operation.

Action: Operate the system without the array accelerator board until the expand operation completes.

Board not Attached

Description: An array controller is configured for use with array accelerator board, but one is not connected.

Action: Connect array accelerator board to array controller.

Cache Has Been Disabled Because ADG Enabler Dongle is Broken or Missing

Description: The cache has been disabled because RAID ADG volume is configured but the ADG Enabler Dongle is broken or missing.

Action: Check the ADG Enabler Dongle. Replace if needed.

Cache Has Been Disabled; Likely Caused By a Loose Pin on One of the RAM Chips

Description: Cache has been disabled due to a large number of ECC errors detected while testing the cache during POST. Likely caused by a loose pin on one of the RAM chips.

Action: Try reseating the cache to the controller. If that does not work, replace the cache.

Configuration Signature is Zero

Description: ADU detected that NVRAM contains a configuration signature of zero. Old versions of the server setup utility could cause this.

Action: Run the latest version of server setup utility to configure the controller and NVRAM.

Configuration Signature Mismatch

Description: Array accelerator board is configured for a different array controller board. Configuration signature on array accelerator board does not match the one stored on the array controller board.

Action: To recognize the array accelerator board, run ACU ("Array Configuration Utility" on page 106).

Controller Communication Failure Occurred

Description: Controller communication failure occurred. ADU was unable to successfully issue commands to the controller in this slot.

Action:

1. Be sure all cables are properly connected and working.
2. Be sure the controller is working, and replace if needed.

Controller Detected. NVRAM Configuration not Present

Description: EISA NVRAM does not contain a configuration for this controller.

Action: Run the server setup utility to configure the NVRAM.

Controller Firmware Needs Upgrading

Description: Controller firmware is below the latest recommended version.

Action: Run Options ROMPaq to upgrade the controller to the latest firmware revision.

Controller is Located in Special "Video" Slot

Description: Controller is installed in the slot for special video control signals. If the controller is used in this slot, LED indicators on front panel may not function properly.

Action: Install the controller into a different slot, and run the server setup utility to configure NVRAM. Then, run ACU to configure the controller.

Controller Is Not Configured

Description: Controller is not configured. If the controller was previously configured and you change drive locations, there may be a problem with placement of the drives. ADU examines each physical drive and looks for drives that have been moved to a different drive bay.

Action: Look for messages indicating which drives have been moved. If none are displayed and drive swapping did not occur, run ACU ("Array Configuration Utility" on page 106) to configure the controller and server setup utility to configure NVRAM. **Do not** run either utility if you believe drive swapping has occurred.

Controller Reported POST Error. Error Code: X

Description: The controller returned an error from its internal POST.

Action: Replace the controller.

Controller Restarted with a Signature of Zero

Description: ADU did not find a valid configuration signature to use to get the data. NVRAM may not be present (unconfigured) or the signature present in NVRAM may not match the signature on the controller.

Action: Run the server setup utility to configure the controller and NVRAM.

Disable Command Issued

Description: The issuing of the Accelerator Disable command has disabled posted-writes. This occurred because of an operating system device driver.

Action: Restart the system. Run ACU ("Array Configuration Utility" on page 106) to reinitialize the array accelerator board.

Drive (Bay) X Firmware Needs Upgrading

Description: Firmware on this physical drive is below the latest recommended version.

Action: Run Options ROMPaq to upgrade the drive firmware to the latest revision.

Drive (Bay) X has Insufficient Capacity for its Configuration

Description: Drive has insufficient capacity to be used in this logical drive configuration.

Action: Replace this drive with a larger capacity drive.

Drive (Bay) X has Invalid M&P Stamp

Description: Physical drive has invalid monitor and performance data.

Action: Run the server setup utility to properly initialize this drive.

Drive (Bay) X Has Loose Cable

Description: The array controller could not communicate with this drive at power-up. This drive has not previously failed.

Action:

1. Be sure all cables are properly connected and working.
2. Power up the system and attempt to reconnect data/power cable to the drive.
3. If the problem persists, replace the cable.
4. If the problem persists, replace the drive.

Drive (Bay) X is a Replacement Drive

Description: This drive has been replaced. This message is displayed if a drive is replaced in a fault-tolerant logical volume.

Action: If the replacement was intentional, allow the drive to rebuild.

Drive (Bay) X is a Replacement Drive Marked OK

Description: This drive has been replaced and marked OK by the firmware, which may occur if a drive has an intermittent failure. For example, a drive has previously failed, then starts working again when ADU is run.

Action: Replace the drive.

Drive (Bay) X is Failed

Description: The indicated physical drive has failed.

Action: Replace this drive.

Drive (Bay) X is Undergoing Drive Recovery

Description: This drive is being rebuilt from the corresponding mirror or parity data.

Action: No action is required.

Drive (Bay) X Needs Replacing

Description: The 210-MB hard drive has firmware version 2.30 or 2.31.

Action: Replace the drive.

Drive (Bay) X Upload Code Not Readable

Description: An error occurred while ADU was trying to read the upload code information from this drive.

Action: If multiple errors occur, the drive may need to be replaced.

Drive (Bay) X Was Inadvertently Replaced

Description: The physical drive was incorrectly replaced after another drive failed.

Action:



CAUTION: Do not run the server setup utility and try to reconfigure, or data will be lost.

1. Replace the drive that was incorrectly replaced.
2. Replace the original drive that failed.

Drive Monitoring Features Are Unobtainable

Description: ADU is unable to get monitor and performance data due to a fatal command problem (such as drive time-out), or is unable to get data due to these features not being supported on the controller.

Action: Check for other errors such as time-outs. If no other errors occur, upgrade the firmware to a version that supports monitor and performance, if desired.

Drive Monitoring is NOT Enabled for SCSI Port X Drive ID Y

Description: The monitor and performance features have not been enabled on this drive.

Action: Run the server setup utility to initialize the monitor and performance features.

Drive Time-Out Occurred on Physical Drive Bay X

Description: ADU issued a command to a physical drive and the command was never acknowledged.

Action: The drive or cable may be bad. Check the other error messages on the Diagnostics screen to determine resolution.

Drive X Indicates Position Y

Description: Message indicates a designated physical drive, which seems to be scrambled or in a drive bay other than the one for which it was originally configured.

Action: Examine the graphical drive representation on ADU to determine proper drive locations. Remove drive *X* and place it in drive position *Y*. Rearrange the drives according to the ADU instructions.

Duplicate Write Memory Error

Description: Data cannot be written to the array accelerator board in duplicate due to the detection of parity errors. This is not a data-loss situation.

Action: Replace the array accelerator board.

Error Occurred Reading RIS Copy from SCSI Port X Drive ID

Description: An error occurred while ADU was trying to read the RIS from this drive.

Action: HP stores the hard drive configuration information in the RIS. If multiple errors occur, the drive may need to be replaced.

FYI: Drive (Bay) X is Third-Party Supplied

Description: Third-party supplied the installed drive.

Action: If problems exist with this drive, replace it with a supported drive.

Identify Logical Drive Data did not Match with NVRAM

Description: The identify unit data from the array controller does not match with the information stored in NVRAM. This can occur if new, previously configured drives have been placed in a system that has also been previously configured.

Action: Run the server setup utility to configure the controller and NVRAM.

Insufficient Adapter Resources

Description: The adapter does not have sufficient resources to perform posted-write operations to the array accelerator board. Drive rebuild may be occurring.

Action: Operate the system without the array accelerator board until the drive rebuild completes.

Inter-Controller Link Connection Could Not Be Established

Description: Unable to communicate over the link connecting the redundant controllers.

Action: Be sure both controllers are using the same hardware and firmware revisions. If one controller failed, replace it.

Less Than 75% Batteries at Sufficient Voltage

Description: The operation of the array accelerator board has been disabled due to less than 75% of the battery packs being at the sufficient voltage level.

Action: Replace the array accelerator board if the batteries do not recharge within 36 powered-on hours.

Less Than 75% of Batteries at Sufficient Voltage Battery Pack X Below Reference Voltage

Description: Battery pack on the array accelerator is below the required voltage levels.

Action: Replace the array accelerator board if the batteries do not recharge within 36 powered-on hours.

Logical Drive X Failed Due to Cache Error

Description: This logical drive failed due to a catastrophic cache error.

Action: Replace the array accelerator board and reconfigure using ACU.

Logical Drive X Status = Failed

Description: This status could be issued for several reasons:

- Logical drive is configured for No Fault Tolerance, and one or more drives failed.
- Mirroring is enabled, and any two mirrored drives failed.
- Data Guarding is enabled, and two or more drives failed.
- Another configured logical drive is in the WRONG DRIVE REPLACED or LOOSE CABLE DETECTED state.

Action: Check for drive failures, wrong drive replaced, or loose cable messages. If a drive failure occurred, replace the failed drive or drives, and then restore the data for this logical drive from the tape backup. Otherwise, follow the procedures for correcting problems when an incorrect drive is replaced or a loose cable is detected.

Logical Drive X Status = Interim Recovery (Volume Functional, but not Fault Tolerant)

Description: A physical drive in this logical drive has failed. The logical drive is operational, but the loss of an additional drive causes permanent data loss.

Action: Replace the failed drive as soon as possible.

Logical Drive X Status = Loose Cable Detected...

...SOLUTION: Turn the system off and attempt to reattach any loose connections. If this does not work, replace the cable(s) and connection(s).

Description: A physical drive or an external storage unit may have a cabling or connection problem.

Action: Power the system down and attempt to reconnect any loose connections. If this does not work, replace the cable(s) and connection(s).

Logical Drive X Status = Overheated

Description: The temperature of the Intelligent Array Expansion System drives is beyond safe operating levels and has shut down to avoid damage.

Action: Check the fans and the operating environment.

Logical Drive X Status = Overheating

Description: The temperature of the Intelligent Array Expansion System drives is beyond safe operating levels.

Action: Check the fans and the operating environment.

Logical Drive X Status = Recovering (rebuilding data on a replaced drive)

Description: A physical drive in this logical drive has failed and has now been replaced. The replaced drive is rebuilding from the mirror drive or the parity data.

Action: No action is required. Normal operations can occur; however, performance will be less than optimal until after the rebuild process completes.

Logical Drive X Status = Wrong Drive Replaced

Description: A physical drive in this logical drive has failed. The incorrect drive was replaced.

Action: Replace the drive that was incorrectly replaced. Then, replace the original drive that failed with a new drive.



CAUTION: Do not run the server setup utility and try to reconfigure, or data will be lost.

Loose Cable Detected - Logical Drives May Be Marked FAILED Until Corrected

Description: ADU found a loose cable. The Smart Array Controller is unable to communicate with one or more physical drives. One or more logical drives may be marked FAILED, and are unusable until the problem is corrected.

Action: Power down the system. Check the cables for a tight connection to the logical drives. Restart the system. If the error persists, the cables may be defective.

Mirror Data Miscompare

Description: Data was found at reset initialization in the posted-write memory; however, the mirror data compare test failed resulting in that data being marked as invalid. Data loss is possible.

Action: Replace the array accelerator board.

No Configuration for Array Accelerator Board

Description: The array accelerator board has not been configured.

Action: If the array accelerator board is present, run ACU to configure the board.

NVRAM Configuration Present, Controller not Detected

Description: EISA NVRAM has a configuration for an array controller, but no board exists in this slot. Either a board has been removed from the system or a board has been placed in the wrong slot.

Action: Place the array controller in the proper slot, or run the server setup utility to reconfigure NVRAM to reflect the removal or new position.

One or More Drives is Unable to Support Redundant Controller Operation

Description: At least one drive in use does not support redundant controller operation.

Action: Replace the drive that does not support redundant controller operation.

Other Controller Indicates Different Hardware Model

Description: The other controller in the redundant controller configuration is a different hardware model.

Action: Be sure both controllers are using the same hardware model. If they are, make sure the controllers are fully seated in their slots.

Other Controller Indicates Different Firmware Version

Description: The other controller in the redundant controller configuration is using a different firmware version.

Action: Be sure both controllers are using the same firmware revision.

Other Controller Indicates Different Cache Size

Description: The other controller in the redundant controller configuration has a different size array accelerator.

Action: Be sure both controllers are using the same capacity array accelerator.

RIS Copies Between Drives Do Not Match

Description: The drives on this controller contain copies of the RIS that do not match. The hard drives in the array do not have matching configuration information.

Action:

1. Resolve all other errors encountered.
2. Obtain the latest version of ADU, and then rerun ADU.
3. If unconfigured drives were added, configure these drives using ACU.
4. If drives or arrays were moved, be sure the movement follows the guidelines listed in the documentation for the array controller.
5. If the error persists after completing steps 1 through 4, contact an authorized service provider.

SCSI Port X Drive ID Y failed - REPLACE (failure message)

Description: ADU detected a drive failure.

Action: Correct the condition that caused the error, if possible, or replace the drive.

SCSI Port X, Drive ID Y Firmware Needs Upgrading

Description: Drive firmware may cause problems and should be upgraded.

Action: Run Options ROMPaq to upgrade the drive firmware to a later revision.

SCSI Port X, Drive ID Y Has Exceeded the Following Threshold(s)

Description: The monitor and performance threshold for this drive has been violated.

Action: Check and resolve the threshold that has been violated.

SCSI Port X, Drive ID Y is not Stamped for Monitoring

Description: The drive has not been stamped with monitor and performance features.

Action: To stamp without destroying the current configuration:

1. Run ACU.
2. Change the array accelerator size and save the configuration.
3. Change the array accelerator back to the original size and save again.

This should cause ACU to stamp the drive with monitoring and performance features.

SCSI Port X, Drive ID Y May Have a Loose Connection...

...SOLUTION: Turn the system off and attempt to reattach any loose connections. If this does not work, replace the cable(s) and connection(s).

Description: SMART is unable to communicate with the drive, because the cable is not securely connected, or the drive cage connection has failed.

Action:

1. Power down the system.
2. Reconnect the cable securely.
3. Restart the system.
4. If the problem persists, replace the cables and connectors as needed.

SCSI Port X, Drive ID Y RIS Copies Within This Drive Do Not Match

Description: The copies of RIS on the drive do not match.

Action: Check for other errors. The drive may need to be replaced.

SCSI Port X, Drive ID Y...S.M.A.R.T. Predictive Failure Errors Have Been Detected in the Factory Monitor and Performance Data...

...SOLUTION: Please replace this drive when conditions permit.

Description: A predictive failure warning for this hard drive has been generated, indicating that a drive failure is imminent.

Action: Replace this drive at the earliest opportunity. Refer to the server documentation for drive replacement information before performing this operation.

SCSI Port X, Drive ID Y...S.M.A.R.T. Predictive Failure Errors Have Been Detected in the Power Monitor and Performance Data...

...SOLUTION: Please replace this drive when conditions permit.

Description: A predictive failure warning for this hard drive has been generated, indicating a drive failure is imminent.

Action: Replace this drive at the earliest opportunity. Refer to the server documentation for drive replacement information before performing this operation.

SCSI Port X, Drive ID Y Was Replaced On a Good Volume: (failure message)

Description: ADU found this drive was replaced, even though no problem occurred with the volume.

Action: No action is required.

Set Configuration Command Issued

Description: The configuration of the array controller has been updated. The array accelerator board may remain disabled until it is reinitialized.

Action: Run the server setup utility to reinitialize the array accelerator board.

Soft Firmware Upgrade Required

Description: ADU has determined that the controller is running firmware that has been soft upgraded by the Upgrade Utility. However, the firmware running is not present on all drives. This could be caused by the addition of new drives in the system.

Action: Run the Upgrade Utility to place the latest firmware on all drives.

Storage Enclosure on SCSI Bus X has a Cabling Error (Bus Disabled)...

...SOLUTION: The SCSI controller has an internal and external cable attached to the same bus. Please disconnect the internal or external cable from the controller. If this controller supports multiple buses, the cable disconnected can be reattached to an available bus.

Description: The current cabling configuration is not supported.

Action: Refer to the server documentation for cabling guidelines, and reconfigure as indicated.

Storage Enclosure on SCSI Bus X Indicated a Door Alert...

...SOLUTION: Be sure that the storage enclosure door is closed or the side panel is properly installed.

Description: The side panel of the external storage unit is open.

Action: Be sure the side panel of the storage unit is securely closed.

Storage Enclosure on SCSI Bus X Indicated a Power Supply Failure...

...SOLUTION: Replace the power supply.

Description: A power supply in the external storage unit has failed.

Action: Replace the power supply.

Storage Enclosure on SCSI Bus X Indicated an Overheated Condition...

...SOLUTION: Make sure all cooling fans are operating properly. Also be sure the operating environment of storage enclosure is within temperature specifications.

Description: The external storage unit is generating a temperature alert.

Action:

1. Be sure all fans are connected and operating properly.
2. Be sure the operating environment of the storage unit is within specifications.
3. For better airflow, remove any dust buildup from fans or other areas.
4. Check the server documentation for allowable temperature specifications and additional tips.
5. If the problem persists, replace the fan.

Storage Enclosure on SCSI Bus X is Unsupported with its Current Firmware Version...

...SOLUTION: Upgrade the firmware version on the storage enclosure.

Description: The firmware version of the external storage unit is not supported.

Action: Upgrade the firmware.

Storage Enclosure on SCSI Bus X Indicated that the Fan Failed...

...SOLUTION: Replace the fan.

Description: The cooling fan located in the external storage unit has failed.

Action: Replace the fan.

Storage Enclosure on SCSI Bus X Indicated that the Fan is Degraded...

...SOLUTION: this condition usually occurs on enclosures with multiple fans and one of those fans has failed. Replace any fans not operating properly.

Description: One or more fans in the external storage unit have failed.

Action: Replace the failed fans.

Storage Enclosure on SCSI Bus X Indicated that the Fan Module is Unplugged...

...SOLUTION: Make sure the fan module is properly connected.

Description: A fan in the external storage unit is not connected properly.

Action: Check and reseat all fan connections securely.

Storage Enclosure on SCSI Bus X - Wide SCSI Transfer Failed...

...SOLUTION: This may indicate a bad SCSI cable on bus X. Try replacing the cable.

Description: A cable on bus X has failed.

Action:

1. Replace the failed cable.
2. If the problem persists, contact an authorized service provider.

Swapped Cables or Configuration Error Detected. A Configured Array of Drives...

...was moved from another controller that supported more drives than this controller supports.

SOLUTION: Upgrade the firmware on this controller. If this doesn't solve the problem, then power down system and move the drives back to the original controller.

Description: You have exceeded the maximum number of drives supported for this controller, and the connected controller was not part of the original array configuration.

Action:

1. Upgrade the firmware on this controller.
2. If the problem persists:

   Replace this controller with the original controller.

   -Or-

   Replace this controller with a new controller that supports the number of drives in the array.

Swapped Cables or Configuration Error Detected. A Drive Rearrangement...

...was attempted while an expand operation was running. This is an unsupported operation.

SOLUTION: Power down system then move drives back to their original location. Power on system and wait for the expand operation to complete before attempting a drive rearrangement.

Description: One or more drive locations were changed while an expand operation was in progress.

Action:

1. Power down the server.
2. Place the drives in their original locations.
3. Restart the server, and then complete the expand operation.
4. Move the drives to their new locations after the expand operation is completed.

Swapped Cables or Configuration Error Detected. An Unsupported Drive Arrangement Was Attempted...

...SOLUTION: Power down system then move drives back to their original location.

Description: One or more physical drives were moved, causing a configuration that is not supported.

Action: Move all drives to their original locations, and then refer to the server documentation for supported configurations.

Swapped Cables or Configuration Error Detected. The Cables Appear To Be Interchanged...

...SOLUTION: Power down system then move the drives or cables back to their original location.

Description: ADU has detected a change in the cable configuration. One or more cables may be connected to the incorrect bus or one or more drives have been moved to new locations.

Action:

1. Refer to the server documentation for supported configurations and cabling guidelines.
2. Restore to the original configuration.

Swapped Cables or Configuration Error Detected. The Configuration Information on the Attached Drives...

...is not backward compatible with this controller's firmware.

SOLUTION: Upgrade the firmware on this controller. If this doesn't solve the problem then power down system then move drives back to the original controller.

Description: The current firmware version on the controller cannot interpret the configuration information on the connected drives.

Action: Upgrade the firmware.

-Or-

If the problem persists, move the drives to the original controller.

Swapped Cables or Configuration Error Detected. The Maximum Logical Volume Count X...

...was exceeded during logical volume addition. All logical volumes beyond X have been lost and cannot be recovered.

SOLUTION: Identify the drives that contain the lost logical volumes. Move those drives to another controller where the logical volumes can be recreated. NOTE! If a drive contains a valid logical volume and a lost logical volume, then do not move that drive to another controller.

Description: More logical drives were created than are supported on this controller, causing lost logical drive volumes.

Action: Identify the drives containing lost volumes, and then move them to another controller so the lost volumes can be recreated.



CAUTION: Removing a drive that contains valid volume data causes all valid data to be lost.

System Board is Unable to Identify which Slots the Controllers are in

Description: Slot indicator on system board is not working correctly. Firmware recognizes both controllers as being installed in the same slot.

Action:

1. Be sure both controllers are fully seated in their slots.

   If the problem persists, this might indicate a controller problem or a system board problem.

   

   CAUTION: Only authorized technicians trained by HP should attempt to remove the system board. If you believe the system board requires replacement, contact HP Technical Support before proceeding.

2. Remove one of the controllers in the configuration and see if the remaining controller generates a POST message.
3. Move the remaining controller to the other slot to see if it still generates a POST message.

4. Repeat these steps with the other controller.

If both controllers give POST messages in one slot but not the other, it is a system board problem. If one of the controllers gives POST messages and the other controller does not, replace the controller that is giving the POST messages. Contact an authorized service provider for any warranty replacements.

This Controller Can See the Drives but the Other Controller Can't

Description: The other controller in the redundant controller configuration cannot recognize the drives, but this controller can.

Action: Resolve any other errors and then rerun ADU.

The Redundant Controllers Installed are not the Same Model...

...SOLUTION: Power down the system and verify that the redundant controllers are different models. If they are different models, replace the other controller with the same model as this one.

Description: ADU detected two different controller models installed in a redundant controller configuration. This is not supported and one or both controllers may not be operating properly.

Action: Use the same controller models for redundant controller configurations.

This Controller Can't See the Drives but the Other Controller Can

Description: The other controller in the redundant controller configuration can recognize the drives, but this controller cannot.

Action: Resolve any other errors and then rerun ADU.

Unable to Communicate with Drive on SCSI Port X, Drive ID Y

Description: The array controller cannot communicate with the drive.

Action: If the hard drive amber LED is on, replace the drive.

Unable to Retrieve Identify Controller Data. Controller May be Disabled or Failed

...SOLUTION: Power down the system. Verify that the controller is fully seated. Then power the system on and look for helpful error messages displayed by the controller. If this doesn't help, contact your COMPAQ service provider.

Description: ADU requested the identify controller data from the controller but was unable to obtain it. This usually indicates that the controller is not seated properly or has failed.

Action:

1. Power down the server.
2. Be sure the controller is fully seated.
3. Restart the server.
4. Resolve any error messages displayed by the controller.

If this does not solve the problem, contact an authorized service provider.

Unknown Disable Code

Description: A code was returned from the array accelerator board that ADU does not recognize.

Action: Obtain the latest version of ADU.

Unrecoverable Read Error

Description: Read parity errors were detected when an attempt to read the same data from both sides of the mirrored memory was made. Data loss will occur.

Action: Replace the array accelerator board.

Warning Bit Detected

Description: A monitor and performance threshold violation may have occurred. The status of a logical drive may not be OK.

Action: Check the other error messages for an indication of the problem.

WARNING - Drive Write Cache is Enabled on X

Description: Drive has its internal write cache enabled. The drive may be a third-party drive, or the operating parameters of the drive may have been altered. Condition can cause data corruption if power to the drive is interrupted.

Action: Replace the drive with a supported drive or restore the operating parameter of the drive.

WARNING: Storage Enclosure on SCSI Bus X Indicated it is Operating in Single Ended Mode...

...SOLUTION: This usually occurs when a single-ended drive type is inserted into an enclosure with other drive types; and that makes the entire enclosure operate in single ended mode. To maximize performance replace the single-ended drive with a type that matches the other drives.

Description: One or more single-ended mode SCSI drives are installed in an external storage unit that operates in LVD mode.

Action: The array continues to operate, but installing all LVD drives maximizes performance.

Write Memory Error

Description: Data cannot be written to the cache memory. This typically means that a parity error was detected while writing data to the cache. This can be caused by an incomplete connection between the cache and the controller. This is not a data loss circumstance.

Action: Power down the system and be sure that the cache board is fully connected to the controller.

Wrong Accelerator

Description: This may mean that the board was replaced in the wrong slot or was placed in a system previously configured with another board type. Included with this message is a message indicating (1) the type of adapter sensed by ADU, and (2) the type of adapter last configured in EISA NVRAM.

Action: Check the diagnosis screen for other error messages. Run the server setup utility to update the system configuration.

POST Error Messages and Beep Codes

List of Messages:

Introduction to POST Error Messages....223
Non-Numeric Messages or Beeps Only....224
100 Series....234
200 Series....237
300 Series....242
400 Series....243
600 Series....244
1100 Series....246
1600 Series....247

Introduction to POST Error Messages

The error messages and codes in this section include all messages generated by ProLiant servers. Some messages are informational only and do not indicate any error. A server generates only the codes that are applicable to its configuration and options.

HP ProLiant BL servers do not have speakers and thus do not support audio output. Disregard the audible beeps information if the server falls into this category.

IMPORTANT: This guide provides information for multiple servers. Some information may not apply to the server you are troubleshooting. Refer to the server documentation for information on procedures, hardware options, software tools, and operating systems supported by the server.



WARNING: To avoid potential problems, ALWAYS read the warnings and cautionary information in the server documentation before removing, replacing, reseating, or modifying system components.

Non-Numeric Messages or Beeps Only

List of Messages:

Advanced Memory Protection Mode: Online spare with... 225
Advanced Memory Protection Mode: Online spare with... 225
An Unexpected Shutdown occurred prior to this power-up 225
Critical Error Occurred Prior to this Power-Up 226
Fan Solution Not Fully Redundant 226
Fan Solution Not Sufficient 226
Fatal DMA Error 226
Fatal Express Port Error 227
Fatal Front Side Bus Error 227
Fatal Global Protocol Error 227
Fatal Hub Link Error 227
FATAL ROM ERROR: The System ROM is not Properly Programmed. 228
High Temperature Condition detected by Processor x 228
Illegal Opcode - System Halted 228
iLO Generated NMI 228
Internal CPU Check - Processor 229
Invalid Password - System Halted! 229
Invalid Password - System Restricted! 229
Network Server Mode Active and No Keyboard Attached 229
NMI - Button Pressed! 230
NMI - Undetermined Source 230
No Floppy Drive Present 230
No Keyboard Present 230
Parity Check 2 - System DIMM Memory 231
PCI Bus Parity Error, PCI Slot x 231
Power Fault Detected in Hot-Plug PCI Slot x 231
Redundant ROM Detected - This system contains a valid backup system ROM. 231
REDUNDANT ROM ERROR: Backup ROM Invalid. - ... 232
REDUNDANT ROM ERROR: Bootblock Invalid. - 232
REDUNDANT ROM ERROR: Primary ROM invalid. Booting Backup ROM. -... 232
Temperature violation detected - system Shutting Down in x seconds 233

Unsupported Processor Detected System will ONLY boot ROMPAQ Utility. System Halted. 233
WARNING: A Type 2 Header PCI Device Has Been Detected... 233

Advanced Memory Protection Mode: Online spare with...

Audible Beeps: None

Possible Cause: Advanced ECC support is available.

Action: None.

Advanced Memory Protection Mode: Online spare with...

...Advanced ECC Xxxx MB System memory and xxxx MB memory reserved for Online Spare

Audible Beeps: None

Possible Cause: This message indicates Online Spare Memory is enabled and indicates the amount of memory reserved for this feature.

Action: None.

An Unexpected Shutdown occurred prior to this power-up

Audible Beeps: None

Possible Cause: The server shut down because of an unexpected event on the previous boot.

Action: Check the System Management Log or OS Event Log for details on the failure.

Critical Error Occurred Prior to this Power-Up

Audible Beeps: None

Possible Cause: A catastrophic system error, which caused the server to crash, has been logged.

Action: Run Insight Diagnostics ("HP Insight Diagnostics" on page 115) and replace failed components as indicated.

Fan Solution Not Fully Redundant

Audible Beeps:

Possible Cause: The minimum number of required fans are installed, but some redundant fans are missing or failed.

Action: Install fans or replace failed fans to complete redundancy.

Fan Solution Not Sufficient

Audible Beeps:

Possible Cause: The minimum number of required fans are missing or failed.

Action: Install fans or replace any failed fans.

Fatal DMA Error

Audible Beeps: None

Possible Cause: The DMA controller has experienced a critical error that has caused an NMI.

Action: Run Insight Diagnostics and replace failed components as indicated.

Fatal Express Port Error

Audible Beeps: None

Possible Cause: A PCI Express port has experienced a fatal error that caused an NMI.

Action: Run Insight Diagnostics and replace failed PCI Express boards or reseat loose PCI Express boards.

Fatal Front Side Bus Error

Audible Beeps: None

Possible Cause: The processor front-side bus experienced a fatal error.

Action: Run Insight Diagnostics and replace any failed processors or reseat an loose processors.

Fatal Global Protocol Error

Audible Beeps: None

Possible Cause: The system experienced a critical error that caused an NMI.

Action: Run Insight Diagnostics and replaced failed components as indicated.

Fatal Hub Link Error

Audible Beeps: None

Possible Cause: The hub link interface has experienced a critical failure that caused an NMI.

Action: Run Insight Diagnostics and replace failed components as indicated.

FATAL ROM ERROR: The System ROM is not Properly Programmed.

Audible Beeps: 1 long, 1 short

Possible Cause: The System ROM is not properly programmed.

Action: Replace the physical ROM part.

High Temperature Condition detected by Processor x

Audible Beeps:

Possible Cause: Ambient temperature exceeds recommended levels, fan solution insufficient, or fans have failed.

Action: Adjust ambient temperature, install fans, or replace failed fans.

Illegal Opcode - System Halted

Audible Beeps: None

Possible Cause: The server has entered the Illegal Operator Handler because of an unexpected event. This error is often software-related and does not necessarily indicate a hardware issue.

Action: Run Insight Diagnostics and replace any failed components as indicated. Be sure that all software is installed properly.

iLO Generated NMI

Audible Beeps: None

Possible Cause: The iLO controller generated an NMI.

Action: Check the iLO logs for details of the event.

Internal CPU Check - Processor

Audible Beeps: None

Possible Cause: A processor has experienced an internal error.

Action: Run Insight Diagnostics and replace any failed components as indicated, including processors and PPMs.

Invalid Password - System Halted!

Audible Beeps: None

Possible Cause: An invalid password was entered.

Action: Enter a valid password to access the system.

Invalid Password - System Restricted!

Audible Beeps: None

Possible Cause: A valid password that does not have permissions to access the system has been entered.

Action: Enter a valid password with the correct permissions.

Network Server Mode Active and No Keyboard Attached

Audible Beeps: None

Possible Cause: A keyboard is not connected. An error has not occurred, but a message is displayed to indicate the keyboard status.

Action: No action is required.

NMI - Button Pressed!

Audible Beeps: None

Possible Cause: The NMI button was pressed, initiating a memory dump for crash dump analysis.

Action: Reboot the server.

NMI - Undetermined Source

Audible Beeps: None

Possible Cause: An NMI event has occurred.

Action: Reboot the server.

No Floppy Drive Present

Audible Beeps: None

Possible Cause: No diskette drive is installed or a diskette drive failure has occurred.

Action:

1. Power down the server.
2. Replace a failed diskette drive.
3. Be sure a diskette drive is cabled properly, if a diskette drive exists.

No Keyboard Present

Audible Beeps: None

Possible Cause: A keyboard is not connected to the server or a keyboard failure has occurred.

Action:

1. Power down the server, and then reconnect the keyboard.

2. Be sure no keys are depressed or stuck.
3. If the failure reoccurs, replace the keyboard.

Parity Check 2 - System DIMM Memory

Audible Beeps: None

Possible Cause: An uncorrectable error memory event occurred in a memory DIMM.

Action: Run Insight Diagnostics to identify failed DIMMs. Then, identify failed DIMMs with LEDs and replace the DIMMs.

PCI Bus Parity Error, PCI Slot x

Audible Beeps: None

Possible Cause: A PCI device has generated a parity error on the PCI bus.

Action: For plug-in PCI cards, remove the card. For embedded PCI devices, run Insight Diagnostics and replace any failed components as indicated.

Power Fault Detected in Hot-Plug PCI Slot x

Audible Beeps: 2 short

Possible Cause: PCI-X Hot Plug expansion slot was not powered up properly.

Action: Reboot the server.

Redundant ROM Detected - This system contains a valid backup system ROM.

Audible Beeps: None

Possible Cause: The system recognizes both the system ROM and redundant ROM as valid. This is not an error.

Action: None

REDUNDANT ROM ERROR: Backup ROM Invalid. - ...

...run ROMPAQ to correct error condition.

Audible Beeps: None

Possible Cause: The backup system ROM is corrupted. The primary ROM is valid.

Action: Run ROMPaq Utility to flash the system so that the primary and backup ROMs are valid.

REDUNDANT ROM ERROR: Bootblock Invalid. - ...

...contact HP Representative.

Audible Beeps: None

Possible Cause: ROM bootblock is corrupt.

Action: Contact an authorized service provider.

REDUNDANT ROM ERROR: Primary ROM invalid. Booting Backup ROM. -...

...run ROMPAQ to correct error condition

Audible Beeps: None

Possible Cause: The primary system ROM is corrupt. The system is booting from the redundant ROM.

Action: Run ROMPaq Utility to restore the system ROM to the correct version.

Temperature violation detected - system Shutting Down in x seconds

Audible Beeps: 1 long, 1 short

Possible Cause: The system has reached a cautionary temperature level and is shutting down in X seconds.

Action: Adjust the ambient temperature, install fans, or replace any failed fans.

Unsupported Processor Detected System will ONLY boot ROMPAQ Utility. System Halted.

Audible Beeps: 1 long, 1 short

Possible Cause: Processor and/or processor stepping is not supported by the current system ROM.

Action: Refer to the server documentation for supported processors. If a ROM version exists that supports the processor, insert a Systems ROMPAQ diskette with the latest ROM version and flash the system to the latest ROM version.

WARNING: A Type 2 Header PCI Device Has Been Detected...

The BIOS will not configure this card.

It must be configured properly by the OS or driver.

Audible Beeps: 2 short

Possible Cause: Only Type 0 and Type 1 Header PCI Devices are configured by the system ROM. The device will not work unless the OS or device driver properly configure the card. Typically this message only occurs when PCI cards with a PCI to PCMCIA bridge are installed.

Action: Refer to the operating system documentation or the device driver information that ships with the Type 2 PCI device.

100 Series

List of Messages:

101-I/O ROM Error....234
102-System Board Failure....234
102-System Board Failure, CMOS Test Failed....235
102-System Board Failure, DMA Test Failed....235
102-System Board Failure, Timer Test Failed....235
104-ASR Timer Failure....236
162-System Options Not Set....236
163-Time & Date Not Set....236
172-1-Configuration Non-volatile Memory Invalid....237
180-Log Reinitialized....237

101-I/O ROM Error

Audible Beeps: None

Possible Cause: Options ROM on a PCI, PCI-X, or PCI Express device is corrupt.

Action: If the device is removable, remove the device and verify that the message disappears. Update Option ROM for a failed device.

102-System Board Failure

Audible Beeps: None

Possible Cause: 8237 DMA controllers, 8254 timers, and similar devices.



CAUTION: Only authorized technicians trained by HP should attempt to remove the system board. If you believe the system board requires replacement, contact HP Technical Support before proceeding.

Action: Replace the system board. Run the server setup utility.

102-System Board Failure, CMOS Test Failed.

Audible Beeps: None

Possible Cause: 8237 DMA controllers, 8254 timers, and similar devices.



CAUTION: Only authorized technicians trained by HP should attempt to remove the system board. If you believe the system board requires replacement, contact HP Technical Support before proceeding.

Action: Contact an authorized service provider for system board replacement.

102-System Board Failure, DMA Test Failed

Audible Beeps: None

Possible Cause: 8237 DMA controllers, 8254 timers, and similar devices.



CAUTION: Only authorized technicians trained by HP should attempt to remove the system board. If you believe the system board requires replacement, contact HP Technical Support before proceeding.

Action: Contact an authorized service provider for system board replacement.

102-System Board Failure, Timer Test Failed

Audible Beeps: None

Possible Cause: 8237 DMA controllers, 8254 timers, and similar devices.



CAUTION: Only authorized technicians trained by HP should attempt to remove the system board. If you believe the system board requires replacement, contact HP Technical Support before proceeding.

Action: Contact and authorized service provider for a system board replacement.

104-ASR Timer Failure

Audible Beeps: None

Possible Cause: System board failure.



CAUTION: Only authorized technicians trained by HP should attempt to remove the system board. If you believe the system board requires replacement, contact HP Technical Support before proceeding.

Action: Run Insight Diagnostics ("HP Insight Diagnostics" on page 115) and replace failed components as indicated.

162-System Options Not Set

Audible Beeps: 2 long

Possible Cause: Configuration is incorrect. The system configuration has changed since the last boot (addition of a hard drive, for example) or a loss of power to the real-time clock has occurred. The real-time clock loses power if the onboard battery is not functioning correctly.

Action: Press the **F1** key to record the new configuration. Run the server setup utility to change the configuration. If this message persists, you may need to replace the onboard battery.

163-Time & Date Not Set

Audible Beeps: 2 long

Possible Cause: Invalid time or date in configuration memory.

Action: Run the server setup utility and correct the time or date.

172-1-Configuration Non-volatile Memory Invalid

Audible Beeps: None

Possible Cause: Nonvolatile configuration corrupted.

Action: Run the server setup utility and correct the configuration.

180-Log Reinitialized

Audible Beeps: None

Possible Cause: The IML ("Integrated Management Log" on page 116) has been reinitialized due to corruption of the log.

Action: Event message, no action is required.

200 Series

List of Messages:

201-Memory Error....238
203-Memory Address Error....238
207-Memory Configuration Warning - DIMM In Socket x does not have Primary Width of 4 and only supports standard ECC....238
207-Invalid Memory Configuration - DIMMs Must be Installed Sequentially....238
207-Invalid Memory Configuration - DIMM Size Parameters Not Supported....239
207-Invalid Memory Configuration - Incomplete Bank Detected in Bank X....239
207-Invalid Memory Configuration - Insufficient Timings on DIMM....239
207-Invalid Memory Configuration - Mismatched DIMMs within DIMM Bank....239
207-Invalid Memory Configuration - Mismatched DIMMs within DIMM Bank....239
207-Invalid Memory Configuration - Unsupported DIMM in Bank x....240
207-Invalid Memory Configuration - Single channel memory....240
207-Invalid Memory Configuration - Unsupported DIMM in Socket X....240
209-Online Spare Memory Configuration - No Valid Banks for Online Spare....241
209-Online Spare Memory Configuration - Spare Bank is Invalid....241
212-Processor Failed, Processor X....241
214-Processor PPM Failed, Module X....241

201-Memory Error

Audible Beeps: None

Possible Cause: Memory failure detected.

Action: Run Insight Diagnostics ("HP Insight Diagnostics" on page 115) and replace failed components as indicated.

203-Memory Address Error

Audible Beeps: None

Possible Cause: Memory failure detected.

Action: Run Insight Diagnostics ("HP Insight Diagnostics" on page 115) and replace failed components as indicated.

207-Memory Configuration Warning - DIMM In Socket x does not have Primary Width of 4 and only supports standard ECC

Advanced ECC does not function when mixing DIMMs with Primary Widths of x4 and x8.

Audible Beeps: 1 long, 1 short, or none

Possible Cause: Installed DIMMs have a primary width of x8.

Action: Install DIMMs that have a primary width of x4 if Advanced ECC memory support is required.

207-Invalid Memory Configuration - DIMMs Must be Installed Sequentially

Audible Beeps: 1 long, 1 short

Possible Cause: Installed DIMMs are not sequentially ordered.

Action: Reinstall DIMMs in proper order.

207-Invalid Memory Configuration - DIMM Size Parameters Not Supported.

Audible Beeps: 1 long, 1 short

Possible Cause: Installed memory module is an unsupported size.

Action: Install a memory module of a supported size.

207-Invalid Memory Configuration - Incomplete Bank Detected in Bank X

Audible Beeps: 1 long, 1 short

Possible Cause: Bank is missing one or more DIMMs.

Action: Fully populate the memory bank.

207-Invalid Memory Configuration - Insufficient Timings on DIMM

Audible Beeps: 1 long, 1 short

Possible Cause: The installed memory module is not supported.

Action: Install a memory module of a supported type.

207-Invalid Memory Configuration - Mismatched DIMMs within DIMM Bank

Audible Beeps: 1 long, 1 short

Possible Cause: Installed DIMMs in the same bank are of different sizes.

Action: Install correctly matched DIMMs.

207-Invalid Memory Configuration - Mismatched DIMMs within DIMM Bank...

...Memory in Bank X Not Utilized.

Audible Beeps: 1 long, 1 short

Possible Cause: Installed DIMMs in the same bank are of different sizes.

Action: Install correctly matched DIMMs.

207-Invalid Memory Configuration - Unsupported DIMM in Bank x

Audible Beeps: 1 long, 1 short

Possible Cause: One of the DIMMs in bank X is of an unsupported type.

Action: Install supported DIMMs to fill the bank.

207-Invalid Memory Configuration - Single channel memory...

...mode supports a single DIMM installed in DIMM socket 1. Please remove all other DIMMs or install memory in valid pairs. System Halted.

Audible Beeps: 1 long, 1 short

Possible Cause: DIMMs are installed in pairs, but the server is in single channel memory mode.

Action: Remove all other DIMMs or install memory in valid pairs and change the memory mode.

207-Invalid Memory Configuration - Unsupported DIMM in Socket X

Audible Beeps: 1 long, 1 short

Possible Cause: Unregistered DIMMs or insufficient DIMM timings.

Action: Install registered ECC DIMMs.

209-Online Spare Memory Configuration - No Valid Banks for Online Spare

Audible Beeps: 1 long, 1 short

Possible Cause: Two valid banks are not available to support an online spare memory configuration.

Action: Install or reinstall DIMMs to support online spare configuration.

209-Online Spare Memory Configuration - Spare Bank is Invalid

Audible Beeps: 1 long, 1 short

Possible Cause: Installed DIMMs for online spare bank are of a size smaller than another bank.

Action: Install or reinstall DIMMs to support online spare configuration.

212-Processor Failed, Processor X

Audible Beeps: 1 short

Possible Cause: Processor in slot *X* failed.

Action: Run Insight Diagnostics ("HP Insight Diagnostics" on page 115) and replace failed components as indicated.

214-Processor PPM Failed, Module X

Audible Beeps: None

Possible Cause: Indicated PPM failed.

Action: Run Insight Diagnostics ("HP Insight Diagnostics" on page 115) and replace failed components as indicated.

300 Series

List of Messages:

301-Keyboard Error....242
301-Keyboard Error or Test Fixture Installed....242
303-Keyboard Controller Error....243
304-Keyboard or System Unit Error....243

301-Keyboard Error

Audible Beeps: None

Possible Cause: Keyboard failure occurred.

Action:

1. Power down the server, and then reconnect the keyboard.
2. Be sure no keys are depressed or stuck.
3. If the failure reoccurs, replace the keyboard.

301-Keyboard Error or Test Fixture Installed

Audible Beeps: None

Possible Cause: Keyboard failure occurred.

Action:

1. Power down the server, and then reconnect the keyboard.
2. Be sure no keys are depressed or stuck.
3. If the failure reoccurs, replace the keyboard.

303-Keyboard Controller Error

Audible Beeps: None

Possible Cause: System board, keyboard, or mouse controller failure occurred.

Action:

1. Be sure the keyboard and mouse are connected.

   CAUTION: Only authorized technicians trained by HP should attempt to remove the system board. If you believe the system board requires replacement, contact HP Technical Support before proceeding.

2. Run Insight Diagnostics ("HP Insight Diagnostics" on page 115) and replace failed components as indicated.

304-Keyboard or System Unit Error

Audible Beeps: None

Possible Cause: Keyboard, keyboard cable, mouse controller, or system board failure.

Action:

1. Be sure the keyboard and mouse are connected.

   CAUTION: Only authorized technicians trained by HP should attempt to remove the system board. If you believe the system board requires replacement, contact HP Technical Support before proceeding.

2. Run Insight Diagnostics ("HP Insight Diagnostics" on page 115) and replace failed components as indicated.

400 Series

List of Messages:

40X-Parallel Port X Address Assignment Conflict 244
404-Parallel Port Address Conflict Detected..... 244

40X-Parallel Port X Address Assignment Conflict

Audible Beeps: 2 short

Possible Cause: Both external and internal ports are assigned to parallel port *X*.

Action: Run the server setup utility and correct the configuration.

404-Parallel Port Address Conflict Detected...

...A hardware conflict in your system is keeping some system components from working correctly. If you have recently added new hardware remove it to see if it is the cause of the conflict. Alternatively, use Computer Setup or your operating system to insure that no conflicts exist.

Audible Beeps: 2 short

Possible Cause: A hardware conflict in the system is preventing the parallel port from working correctly.

Action:

1. If you have recently added new hardware, remove it to see if the hardware is the cause of the conflict.
2. Run the server setup utility to reassign resources for the parallel port and manually resolve the resource conflict.
3. Run Insight Diagnostics ("HP Insight Diagnostics" on page 115) and replace failed components as indicated.

600 Series

List of Messages:

601-Diskette Controller Error....245
602-Diskette Boot Record Error....245
605-Diskette Drive Type Error....245
611-Primary Floppy Port Address Assignment Conflict....246
612-Secondary Floppy Port Address Assignment Conflict....246

601-Diskette Controller Error

Audible Beeps: None

Possible Cause: Diskette controller circuitry failure occurred.

Action:

1. Be sure the diskette drive cables are connected.
2. Replace the diskette drive, the cable, or both.
3. Run Insight Diagnostics ("HP Insight Diagnostics" on page 115) and replace failed components as indicated.

602-Diskette Boot Record Error

Audible Beeps: None

Possible Cause: The boot sector on the boot disk is corrupt.

Action:

1. Remove the diskette from the diskette drive.
2. Replace the diskette in the drive.
3. Reformat the diskette.

605-Diskette Drive Type Error.

Audible Beeps: 2 short

Possible Cause: Mismatch in drive type occurred.

Action: Run the server setup utility to set the diskette drive type correctly.

611-Primary Floppy Port Address Assignment Conflict

Audible Beeps: 2 short

Possible Cause: A hardware conflict in the system is preventing the diskette drive from operating properly.

Action:

1. Run the server setup utility to configure the diskette drive port address and manually resolve the conflict.
2. Run Insight Diagnostics ("HP Insight Diagnostics" on page 115) and replace failed components as indicated.

612-Secondary Floppy Port Address Assignment Conflict

Audible Beeps: 2 short

Possible Cause: A hardware conflict in the system is preventing the diskette drive from operating properly.

Action:

1. Run the server setup utility to configure the diskette drive port address and manually resolve the conflict.
2. Run Insight Diagnostics ("HP Insight Diagnostics" on page 115) and replace failed components as indicated.

1100 Series

List of Messages:

1151-Com Port 1 Address Assignment Conflict 247

1151-Com Port 1 Address Assignment Conflict

Audible Beeps: 2 short

Possible Cause: Both external and internal serial ports are assigned to COM *X*.

Action: Run the server setup utility and correct the configuration.

1600 Series

List of Messages:

1609 - The server may have a failed system battery. Some... 247
1610-Temperature Violation Detected. - Waiting 5 Minutes for System to Cool.....248
1611-CPU Zone Fan Assembly Failure Detected. Either.....248
1611-CPU Zone Fan Assembly Failure Detected. Single fan... 248
1611-Fan Failure Detected 249
1611-Fan x Failure Detected (Fan Zone CPU).....249
1611-Fan x Failure Detected (Fan Zone I/O) 250
1611-Fan x Not Present (Fan Zone CPU).....250
1611-Fan x Not Present (Fan Zone I/O).....250
1611- Power Supply Zone Fan Assembly Failure Detected. Either... 251
1611-Power Supply Zone Fan Assembly Failure Detected. Single fan... 251
1611-Primary Fan Failure (Fan Zone System) 251
1611-Redundant Fan Failure (Fan Zone System).....252
1612-Primary Power Supply Failure 252
1615-Power Supply Configuration Error.....252
1615-Power Supply Configuration Error.....252
1615-Power Supply Failure, Power Supply Unplugged, or Power Supply Fan Failure in Bay X253
1616-Power Supply Configuration Failure.....253

1609 - The server may have a failed system battery. Some...

...configuration settings may have been lost and restored to defaults. Refer to server documentation for more information. If you have just replaced the system battery, disregard this message.

Audible Beeps: None

Possible Cause: Real-time clock system battery has lost power. The system will lose its configuration every time AC power is removed (when the system is unplugged from AC power source) and this message displays again if a battery failure has occurred. However, the system will function and retain configuration settings if the system is connected to the AC power source.

Action: Replace battery (or add external battery).

1610-Temperature Violation Detected. - Waiting 5 Minutes for System to Cool

Audible Beeps: None

Possible Cause: The ambient system temperature exceeded acceptable levels.

Action: Lower the room temperature.

1611-CPU Zone Fan Assembly Failure Detected. Either...

...the Assembly is not installed or multiple fans have failed in the CPU zone.

Audible Beeps: None

Possible Cause: Required fans are missing or not spinning.

Action:

1. Check the fans to be sure they are installed and working.
2. Be sure the assembly is properly connected and each fan is properly seated.
3. If the problem persists, replace the failed fans.
4. If a known working replacement fan is not spinning, replace the assembly.

1611-CPU Zone Fan Assembly Failure Detected. Single fan...

...failure. Assembly will provide adequate cooling.

Audible Beeps: None

Possible Cause: Required fan not spinning.

Action: Replace the failed fan to provide redundancy, if applicable.

1611-Fan Failure Detected

Audible Beeps: 2 short

Possible Cause: Required fan not installed or spinning.

Action:

1. Check the fans to be sure they are working.
2. Be sure each fan cable is properly connected and each fan is properly seated.
3. If the problem persists, replace the failed fans.

1611-Fan x Failure Detected (Fan Zone CPU)

Audible Beeps: 2 short

Possible Cause: Required fan not installed or spinning.

Action:

1. Check the fans to be sure they are working.
2. Be sure each fan cable is properly connected, if applicable, and each fan is properly seated.
3. If the problem persists, replace the failed fans.

1611-Fan x Failure Detected (Fan Zone I/O)

Audible Beeps: 2 short

Possible Cause: Required fan not installed or spinning.

Action:

1. Check the fans to be sure they are working.
2. Be sure each fan cable is properly connected, if applicable, and each fan is properly seated.
3. If the problem persists, replace the failed fans.

1611-Fan x Not Present (Fan Zone CPU)

Audible Beeps: 2 short

Possible Cause: Required fan not installed or spinning.

Action:

1. Check the fans to be sure they are working.
2. Be sure each fan cable is properly connected, if applicable, and each fan is properly seated.
3. If the problem persists, replace the failed fans.

1611-Fan x Not Present (Fan Zone I/O)

Audible Beeps: 2 short

Possible Cause: Required fan not installed or spinning.

Action:

1. Check the fans to be sure they are working.
2. Be sure each fan cable is properly connected, if applicable, and each fan is properly seated.
3. If the problem persists, replace the failed fans.

1611- Power Supply Zone Fan Assembly Failure Detected. Either...

...the Assembly is not installed or multiple fans have failed.

Audible Beeps: None

Possible Cause: Required fans are missing or not spinning.

Action:

1. Check the fans to be sure they are installed and working.
2. Be sure the assembly is properly connected and each fan is properly seated.
3. If the problem persists, replace the failed fans.
4. If a known working replacement fan is not spinning, replace the assembly.

1611-Power Supply Zone Fan Assembly Failure Detected. Single fan...

...failure. Assembly will provide adequate cooling.

Audible Beeps: None

Possible Cause: Required fan not spinning.

Action: Replace the failed fan to provide redundancy, if applicable.

1611-Primary Fan Failure (Fan Zone System)

Audible Beeps: None

Possible Cause: A required fan is not spinning.

Action: Replace the failed fan.

1611-Redundant Fan Failure (Fan Zone System)

Audible Beeps: None

Possible Cause: A redundant fan is not spinning.

Action: Replace the failed fan.

1612-Primary Power Supply Failure

Audible Beeps: 2 short

Possible Cause: Primary power supply has failed.

Action: Replace power supply.

1615-Power Supply Configuration Error

Audible Beeps: None

Possible Cause: The server configuration requires an additional power supply. A moving bar is displayed, indicating that the system is waiting for another power supply to be installed.

Action: Install the additional power supply.

1615-Power Supply Configuration Error

- A working power supply must be installed in Bay 1 for proper cooling.

- System Halted!

Audible Beeps: None

Possible Cause: The server configuration requires an additional power supply. A moving bar is displayed, indicating that the system is waiting for another power supply to be installed.

Action: Install the additional power supply.

1615-Power Supply Failure, Power Supply Unplugged, or Power Supply Fan Failure in Bay X

Audible Beeps: None

Possible Cause: The power supply has failed, or it is installed but not connected to the system board or AC power source.

Action: Reseat the power supply firmly and check the power cable or replace power supply.

1616-Power Supply Configuration Failure

-A working power supply must be installed in Bay 1 for proper cooling.

-System Halted!

Audible Beeps: None

Possible Cause: Power supply is improperly configured.

Action: Run the server setup utility and correct the configuration.

Event List Error Messages

List of Messages:

Introduction to Event List Error Messages....254
A CPU Power Module (System Board, Socket X)....255
ASR Lockup Detected: Cause....255
Automatic Operating System Shutdown Initiated Due to Fan Failure....255
Automatic Operating System Shutdown Initiated Due to Overheat Condition....255
Blue Screen Trap: Cause [NT]....255
Corrected Memory Error Threshold Passed (Slot X, Memory Module Y)....256
EISA Expansion Bus Master Timeout (Slot X)....256
PCI Bus Error (Slot X, Bus Y, Device Z, Function X)....256
Processor Correctable Error Threshold Passed (Slot X, Socket Y)....256
Processor Uncorrectable Internal Error (Slot X, Socket Y)....257
Real-Time Clock Battery Failing....257
System AC Power Overload (Power Supply X)....257
System AC Power Problem (Power Supply X)....257

System Fan Failure (Fan X, Location) 257
System Fans Not Redundant..... 257
System Overheating (Zone X, Location)..... 258
System Power Supplies Not Redundant 258
System Power Supply Failure (Power Supply X)..... 258
Unrecoverable Host Bus Data Parity Error... 258
Uncorrectable Memory Error (Slot X, Memory Module Y)... 258

Introduction to Event List Error Messages

This section contains event list error messages recorded in the IML ("Integrated Management Log" on page 116), which can be viewed through different tools.

The format of the list is different when viewed through different tools. An example of the format of an event as displayed on the IMD follows:

```
**001 of 010**
---caution---
03/19/2002
12:54 PM
FAN INSERTED
Main System
Location:
System Board
Fan ID: 03
**END OF EVENT**
```

WARNING: To avoid potential problems, ALWAYS read the warnings and cautionary information in the server documentation before removing, replacing, reseating, or modifying system components.

IMPORTANT: This guide provides information for multiple servers. Some information may not apply to the server you are troubleshooting. Refer to the server documentation for information on procedures, hardware options, software tools, and operating systems supported by the server.

NOTE: The error messages in this section may be worded slightly different than as displayed by the server.

A CPU Power Module (System Board, Socket X)...

...A CPU Power Module (Slot X, Socket Y) Failed

Event Type: Power module failure

Action: Replace the power module. In the case of an embedded power module, replace the system board.

ASR Lockup Detected: Cause

Event Type: System lockup

Action: Examine the IML ("Integrated Management Log" on page 116) to determine the cause of the lockup, and then refer to the *HP ROM-Based Setup Utility User Guide,* on the server Documentation CD or at the SmartStart website (http://h18013.www1.hp.com/products/servers/management/smartstart), for more information.

Automatic Operating System Shutdown Initiated Due to Fan Failure

Event Type: Fan failure

Action: Replace the fan.

Automatic Operating System Shutdown Initiated Due to Overheat Condition...

...Fatal Exception (Number X, Cause)

Event Type: Overheating condition

Action: Check fans. Also, be sure the server is properly ventilated and the room temperature is set within the required range.

Blue Screen Trap: Cause [NT]...

...Kernel Panic: Cause [UNIX]

Abnormal Program Termination: Cause [NetWare]

Event Type: System lockup

Action: Refer to the operating system documentation.

Corrected Memory Error Threshold Passed (Slot X, Memory Module Y)...

...Corrected Memory Error Threshold Passed (System Memory)

Corrected Memory Error Threshold Passed (Memory Module Unknown)

Event Type: Correctable error threshold exceeded

Action: Continue normal operation, and then replace the memory module during the next scheduled maintenance to ensure reliable operation.

EISA Expansion Bus Master Timeout (Slot X)...

...EISA Expansion Bus Slave Timeout

EISA Expansion Board Error (Slot X)

EISA Expansion Bus Arbitration Error

Event Type: Expansion bus error

Action: Power down the server, and then replace the EISA board.

PCI Bus Error (Slot X, Bus Y, Device Z, Function X)

Event Type: Expansion bus error

Action: Replace the PCI board.

Processor Correctable Error Threshold Passed (Slot X, Socket Y)

Event Type: Correctable error threshold exceeded

Action: Replace the processor.

Processor Uncorrectable Internal Error (Slot X, Socket Y)

Event Type: Uncorrectable error

Action: Replace the processor.

Real-Time Clock Battery Failing

Event Type: System configuration battery low

Action: Replace the system configuration battery.

System AC Power Overload (Power Supply X)

Event Type: Power supply overload

Action:

1. Switch the voltage from 110 V to 220 V or add an additional power supply (if applicable to the system).
2. If the problem persists, remove some of the installed options.

System AC Power Problem (Power Supply X)

Event Type: AC voltage problem

Action: Check for any power source problems.

System Fan Failure (Fan X, Location)

Event Type: Fan failure

Action: Replace the fan.

System Fans Not Redundant

Event Type: Fans not redundant

Action: Add a fan or replace the failed fan.

System Overheating (Zone X, Location)

Event Type: Overheating condition

Action: Check fans.

System Power Supplies Not Redundant

Event Type: Power supply not redundant

Action: Add a power supply or replace the failed power supply.

System Power Supply Failure (Power Supply X)

Event Type: Power supply failure

Action: Replace the power supply.

Unrecoverable Host Bus Data Parity Error...

...Unrecoverable Host Bus Address Parity Error

Event Type: Host bus error



CAUTION: Only authorized technicians trained by HP should attempt to remove the system board. If you believe the system board requires replacement, contact HP Technical Support before proceeding.

Action: Replace the board on which the processor is installed.

Uncorrectable Memory Error (Slot X, Memory Module Y)...

...Uncorrectable Memory Error (System Memory)

Uncorrectable Memory Error (Memory Module Unknown)

Event Type: Uncorrectable error

Action: Replace the memory module. If the problem persists, replace the memory board.

Regulatory Compliance Notices

In This Section

Regulatory Compliance Identification Numbers 259
Federal Communications Commission Notice 259

Regulatory Compliance Identification Numbers

For the purpose of regulatory compliance certifications and identification, this product has been assigned a unique regulatory model number. The regulatory model number can be found on the product nameplate label, along with all required approval markings and information. When requesting compliance information for this product, always refer to this regulatory model number. The regulatory model number is not the marketing name or model number of the product.

Federal Communications Commission Notice

Part 15 of the Federal Communications Commission (FCC) Rules and Regulations has established Radio Frequency (RF) emission limits to provide an interference-free radio frequency spectrum. Many electronic devices, including computers, generate RF energy incidental to their intended function and are, therefore, covered by these rules. These rules place computers and related peripheral devices into two classes, A and B, depending upon their intended installation. Class A devices are those that may reasonably be expected to be installed in a business or commercial environment. Class B devices are those that may reasonably be expected to be installed in a residential environment (for example, personal computers). The FCC requires devices in both classes to bear a label indicating the interference potential of the device as well as additional operating instructions for the user.

FCC Rating Label

The FCC rating label on the device shows the classification (A or B) of the equipment. Class B devices have an FCC logo or ID on the label. Class A devices do not have an FCC logo or ID on the label. After you determine the class of the device, refer to the corresponding statement.

Class A Equipment

This equipment has been tested and found to comply with the limits for a Class A digital device, pursuant to Part 15 of the FCC Rules. These limits are designed to provide reasonable protection against harmful interference when the equipment is operated in a commercial environment. This equipment generates, uses, and can radiate radio frequency energy and, if not installed and used in accordance with the instructions, may cause harmful interference to radio communications. Operation of this equipment in a residential area is likely to cause harmful interference, in which case the user will be required to correct the interference at personal expense.

Declaration of Conformity for Products Marked with the FCC Logo, United States Only

This device complies with Part 15 of the FCC Rules. Operation is subject to the following two conditions: (1) this device may not cause harmful interference, and (2) this device must accept any interference received, including interference that may cause undesired operation.

For questions regarding this product, contact us by mail or telephone:

- Hewlett-Packard Company
  P. O. Box 692000, Mail Stop 530113
  Houston, Texas 77269-2000
- 1-800-HP-INVENT (1-800-474-6836). (For continuous quality improvement, calls may be recorded or monitored.)

For questions regarding this FCC declaration, contact us by mail or telephone:

- Hewlett-Packard Company
  P. O. Box 692000, Mail Stop 510101
  Houston, Texas 77269-2000
- 1-281-514-3333

To identify this product, refer to the part, series, or model number found on the product.

Modifications

The FCC requires the user to be notified that any changes or modifications made to this device that are not expressly approved by Hewlett-Packard Company may void the user's authority to operate the equipment.

Cables

Connections to this device must be made with shielded cables with metallic RFI/EMI connector hoods in order to maintain compliance with FCC Rules and Regulations.

Mouse Compliance Statement

This device complies with Part 15 of the FCC Rules. Operation is subject to the following two conditions: (1) this device may not cause harmful interference, and (2) this device must accept any interference received, including interference that may cause undesired operation.

Canadian Notice

Class A Equipment

This Class A digital apparatus meets all requirements of the Canadian Interference-Causing Equipment Regulations.

Cet appareil numérique de la classe A respecte toutes les exigences du Règlement sur le matériel brouilleur du Canada.

European Union Notice

CE

Products bearing the CE marking comply with the EMC Directive (89/336/EEC) and the Low Voltage Directive (73/23/EEC) issued by the Commission of the European Community and, if this product has telecommunication functionality, the R&TTE Directive (1999/5/EC).

Compliance with these directives implies conformity to the following European Norms (in parentheses are the equivalent international standards and regulations):

- EN 55022 (CISPR 22)—Electromagnetic Interference
- EN55024 (IEC61000-4-2, 3, 4, 5, 6, 8, 11)—Electromagnetic Immunity
- EN61000-3-2 (IEC61000-3-2)—Power Line Harmonics
- EN61000-3-3 (IEC61000-3-3)—Power Line Flicker
- EN 60950 (IEC60950)—Product Safety

Japanese Notice

ご使用になっている装置にVCCIマークが付いていましたら、次の説明文をお読み下さい。

この装置は、情報処理装置等電波障害自主規制協議会（VCCI）の基準に基づくクラスB情報技術装置です。この装置は、家庭環境で使用することを目的としていますが、この装置がラジオやテレビジョン受信機に近接して使用されると、受信障害を引き起こすことがあります。
取扱説明書に従って正しい取り扱いをして下さい。

VCCIマークが付いていない場合には、次の点にご注意下さい。

この装置は、情報処理装置等電波障害自主規制協議会（VCCI）の基準に基づくクラスA情報技術装置です　この装置を家庭環境で使用すると電波妨害を引き起こすことがあります。この場合には使用者が適切な対策を講ずるよう要求されることがあります。

BSMI Notice

警告使用者:

這是甲類的資訊產品，在居住的
環境中使用時，可能會造成射頻
干擾，在這種情況下，使用者會
被要求採取某些適當的對策。

Laser Compliance

This product may be provided with an optical storage device (that is, CD or DVD drive) and/or fiber optic transceiver. Each of these devices contains a laser that is classified as a Class 1 Laser Product in accordance with US FDA regulations and the IEC 60825-1. The product does not emit hazardous laser radiation.

WARNING: Use of controls or adjustments or performance of procedures other than those specified herein or in the laser product's installation guide may result in hazardous radiation exposure. To reduce the risk of exposure to hazardous radiation:

- **Do not try to open the module enclosure. There are no user-serviceable components inside.**
- **Do not operate controls, make adjustments, or perform procedures to the laser device other than those specified herein.**
- **Allow only HP Authorized Service technicians to repair the unit.**

The Center for Devices and Radiological Health (CDRH) of the U.S. Food and Drug Administration implemented regulations for laser products on August 2, 1976. These regulations apply to laser products manufactured from August 1, 1976. Compliance is mandatory for products marketed in the United States.

Taiwan Battery Recycling Notice

The Taiwan EPA requires dry battery manufacturing or importing firms in accordance with Article 15 of the Waste Disposal Act to indicate the recovery marks on the batteries used in sales, giveaway or promotion. Contact a qualified Taiwanese recycler for proper battery disposal.



Electrostatic Discharge

In This Section

Preventing Electrostatic Discharge.....265
Grounding Methods to Prevent Electrostatic Discharge.....266

Preventing Electrostatic Discharge

To prevent damaging the system, be aware of the precautions you need to follow when setting up the system or handling parts. A discharge of static electricity from a finger or other conductor may damage system boards or other static-sensitive devices. This type of damage may reduce the life expectancy of the device.

To prevent electrostatic damage:

- Avoid hand contact by transporting and storing products in static-safe containers.
- Keep electrostatic-sensitive parts in their containers until they arrive at static-free workstations.
- Place parts on a grounded surface before removing them from their containers.
- Avoid touching pins, leads, or circuitry.
- Always be properly grounded when touching a static-sensitive component or assembly.

Grounding Methods to Prevent Electrostatic Discharge

Several methods are used for grounding. Use one or more of the following methods when handling or installing electrostatic-sensitive parts:

- Use a wrist strap connected by a ground cord to a grounded workstation or computer chassis. Wrist straps are flexible straps with a minimum of 1 megohm ±10 percent resistance in the ground cords. To provide proper ground, wear the strap snug against the skin.
- Use heel straps, toe straps, or boot straps at standing workstations. Wear the straps on both feet when standing on conductive floors or dissipating floor mats.
- Use conductive field service tools.
- Use a portable field service kit with a folding static-dissipating work mat.

If you do not have any of the suggested equipment for proper grounding, have an authorized reseller install the part.

For more information on static electricity or assistance with product installation, contact an authorized reseller.

Server Specifications

In This Section

Server Specifications 267
Environmental Specifications 268

Server Specifications

Dimensions	
Height	8.59 cm (3.38 in)
Depth	66.07 cm (26.01 in)
Width	44.54 cm (17.54 in)
Weight (maximum)	27.22 kg (60 lb)
Weight (no drives installed)	20.41 kg (47.18 lb)
Input requirements	
Rated input voltage	100 - 132 VAC, 200 - 240 VAC
Rated input frequency	50 Hz to 60 Hz
Rated input current	7.5 A (100 VAC), 3.8 A (200 VAC)
Rated input power	735 W
BTUs per hour	2508
Power supply output	
Rated steady-state power	575 W
Maximum peak power	575 W

Environmental Specifications

Temperature range*	
Operating	10°C to 35°C (50°F to 95°F)
Shipping	-30°C to 50°C (-22°F to 122°F)
Storage	-40°C to 70°C (-40°F to 158°F)
Maximum wet bulb temperature	28°C (82.4°F)
Relative humidity (noncondensing)**	
Operating	10% to 90%
Non-operating	5% to 95%

* All temperature ratings shown are for sea level. An altitude derating of 1°C per 300 m (1.8°F per 1,000 ft) to 3048 m (10,000 ft) is applicable. No direct sunlight allowed.

** Storage maximum humidity of 95% is based on a maximum temperature of 45°C (113°F). Altitude maximum for storage corresponds to a pressure minimum of 70 KPa.

Technical Support

In This Section

Related Documents....269
HP Contact Information....269
Before You Contact HP....270

Related Documents

For related documentation, refer to the Documentation CD.

HP Contact Information

For the name of the nearest HP authorized reseller:

- In the United States, call 1-800-345-1518.
- In Canada, call 1-800-263-5868.
- In other locations, refer to the HP website (http://www.hp.com).

For HP technical support:

- In North America:
  - Call 1-800-HP-INVENT (1-800-474-6836). This service is available 24 hours a day, 7 days a week. For continuous quality improvement, calls may be recorded or monitored.
  - If you have purchased a Care Pack (service upgrade), call 1-800-633-3600. For more information about Care Packs, refer to the HP website (http://www.hp.com).
- Outside North America, call the nearest HP Technical Support Phone Center. For telephone numbers for worldwide Technical Support Centers, refer to the HP website (http://www.hp.com).

Before You Contact HP

Be sure to have the following information available before you call HP:

- Technical support registration number (if applicable)
- Product serial number
- Product model name and number
- Applicable error messages
- Add-on boards or hardware
- Third-party hardware or software
- Operating system type and revision level

Acronyms and Abbreviations

ABEND

abnormal end

ACU

Array Configuration Utility

ASR

Automatic Server Recovery

BBWC

battery-backed write cache

DDR

double data rate

DIMM

dual inline memory module

ECC

error checking and correcting

IEC

International Electrotechnical Commission

iLO

Integrated Lights-Out

IML

Integrated Management Log

IPL

initial program load

IRQ

interrupt request

MPS

multi-processor specification

NEMA

National Electrical Manufacturers Association

NFPA

National Fire Protection Association

NIC

network interface controller

NMI

non-maskable interrupt

NVRAM

non-volatile memory

ORCA

Option ROM Configuration for Arrays

PCI-X

peripheral component interconnect extended

PDU

power distribution unit

POST

Power-On Self-Test

PPM

Processor Power Module

PSP

ProLiant Support Pack

PXE

preboot eXecution environment

RBSU

ROM-Based Setup Utility

RILOE II

Remote Insight Lights-Out Edition II

SDRAM

synchronous dynamic RAM

SIM

Systems Insight Manager

TMRA

recommended ambient operating temperature

UID

unit identification

USB

universal serial bus

VHDCI

very high density cable interconnect

WOL

Wake-on LAN

Index

1

120PCI.HAM 174

A

AC power supply 14
access panel 36, 37
ACPI support 174
ACU (Array Configuration Utility) 106
additional information 269
ADU (Array Diagnostic Utility) 115
ADU Error Messages 190
Altiris Deployment Solution 107
Altiris eXpress Deployment Server 107
array configuration 59
Array Configuration Utility (ACU) 106
Array Diagnostic Utility 115
ASR (Automatic Server Recovery) 108, 271
audio 164
authorized reseller 269
auto-configuration process 104
Automatic Server Recovery (ASR) 108, 271
Autorun Menu 101

B

backup, restoring 174
battery 17, 18, 143
BIOS Serial Console 105
BIOS upgrade 109
blue screen event 17
board components 15
boot options 105
booting problems 148
booting the server 148
BSMI notice 263
buttons 9, 11, 14, 26

C

cable configuration 85
cable management arm 44, 45
cables 85, 261
cables, VGA 164
cabling 45, 85
Care Pack 39, 119
cartridge, tape 152
cautions 123, 175
CD-ROM drive 148
CD-ROM drive connectors 15
Change Control 118
chassis ID switch 15, 17
clustering software guidelines 178
command syntax 180
component identification 10, 12, 15, 17
components 9
configuration of system 49, 101
Configuration Replication Utility 103
connection problems 144
connectors 9, 10, 12, 15
contacting HP 182, 183, 184, 269, 270
crash dump analysis 17
creating a disk image 107

D

DAT drives 149
DC power supply 14
deployment software 107
diagnosing problems 121, 127
Diagnostic Adapter 166
diagnostic steps 121, 127
diagnostic tools 101, 107, 108, 109, 114, 115, 116
diagnostics utility 115
DIMM slot LEDs 20, 24
DIMM slots 18, 33
DIMMs 59
diskette drive 10, 20, 63, 94, 150
diskette drive connectors 15, 22
diskette image creation 107

DLT drive 152
drive bays 10
drive LEDs 24, 25
drivers 117, 178
drives, configuring 59
duplex SCSI hard drive configuration 60, 87
DVD-ROM drive 10, 148

E

electrical grounding requirements 43
electrostatic discharge 265
environmental requirements 40
erasing the system 181
error messages 190, 223, 253
European Union notice 262
event list error messages 253
expansion boards 77, 81
expansion slot covers, removing 77, 78
expansion slot LEDs 14, 26, 27
expansion slots 12
extending server from rack 35

F

factory-installed operating systems 173
fan brackets 69
fan connectors 15
fan LED 20, 24, 30, 155
fan zones 25
fans 29, 66, 68, 154, 155
features 9
Federal Communications Commission (FCC) Notice 259, 261
flash ROM 109
flowcharts 127
front panel buttons 11
front panel components 10
front panel LEDs 11

G

general diagnosis flowchart 129
grounding methods 266
grounding requirements 43

H

hard drive blanks 10
hard drive LEDs 24, 25
hard drives 24, 25, 59, 61, 85, 155
hard drives, determining status of 24
hardware options installation 45, 51
hardware troubleshooting 141, 143, 144, 146, 148, 162
Health Driver 20, 24, 66, 108
health LEDs 11, 20, 24
help resources 269
hotfixes 174
HP Insight Diagnostics 115, 254
HP ProLiant Essentials Foundation Pack 49, 111
HP ProLiant Essentials Rapid Deployment Pack 107
HP Systems Insight Manager, overview 111
HP Technical Support 270

I

IBM OS/2 188
IDE device 144
identification number, server 259
iLO (Integrated Lights-Out) 12, 110
iLO RBSU (Integrated Lights-Out ROM-Based Setup Utility) 113
IMD (Integrated Management Display) 254
IML (Integrated Management Log) 116, 254
Important Safety Information document 121
information required 183
Insight Diagnostics 115, 254
installation services 39
installation, server options 45
installing hardware 51
installing operating system 49
Integrated Lights-Out (iLO) 110
Integrated Lights-Out ROM-Based Setup Utility (iLO RBSU) 113
Integrated Management Display (IMD) 254
Integrated Management Log (IML) 116, 254
internal health LED 11, 20

J

Japanese notice 262

K

keyboard 165
keyboard connector 12
KVM 164, 165

L

laser devices 263
LEDs 9, 11, 14, 20, 23, 24, 25, 26, 27, 143
LEDs, hard drive 24
LEDs, troubleshooting 121, 127
Linux 176, 185
loose connections 144

M

maintenance 116
Management Agents 111
management tools 108
MEGA4 XX.HAM 174
memory 58, 59, 157
memory dump 17
memory slot LEDs 20
memory slots 15, 18
Microsoft operating systems 184
modems 166
mouse 165
mouse compliance statement 261
mouse connector 12

N

Natural Language Search Assistant 118
network connector LEDs 14
network controllers 170
new hardware 144
NIC (network interface controller) 173, 272
NIC connectors 12
NIC LEDs 11
NMI switch 17
Novell NetWare 173, 174, 186
NVRAM, configuring 210

O

Online ROM Flash Component Utility 109
online spare memory 58, 105
online spare memory LED 20
operating system crash 17
operating system problems 173
operating system updates 174
operating systems 49, 118, 172, 184
optimum environment 40
Option ROM Configuration for Arrays (ORCA) 106
options installation 45, 51
ORCA (Option ROM Configuration for Arrays) 106
OS boot problems flowchart 136
overtemperature LED 20, 25

P

PaqFax 118
patches 174
PCI array controllers, cabling 88
PCI boards 146
PCI Hot Plug backplane cabling 96
PCI Hot Plug features 81
PCI Hot Plug functionality 163
PCI Hot Plug LEDs 14, 26
PCI riser cage 28, 75
PCI riser cage LED 27
PCI slots 12
PCI-X boards 12
phone numbers 269, 270
POST error messages 223
POST problems flowchart 134
power button cabling 95
power connectors, internal 15
power converter module LED 20, 31
power cord 123
power cord connector 12, 17
power distribution unit 43
power LEDs, system 10, 11

power on problems flowchart 131
Power On/Standby button 10, 11, 33, 95
power problems 141, 142, 162
power requirements 42
power source 141
power supplies 14, 142
power supply LEDs 14, 31
powering up 33, 103
PPM (Processor Power Module) 160
PPM failure LEDs 20, 25
PPM slots 15
printers 165
problem diagnosis 121, 127
processor failure LEDs 20
processors 15, 160
ProLiant Support Packs 118
Protocols Interview 173
PSPs, overview 118

R

rack installation 39, 44, 45
rack mounting hardware 44
rack resources 40
rack stability 123
rack warnings 44
RAID configuration 106
RBSU (ROM-Based Setup Utility) 103, 148
rear components 12
rear panel buttons 14
rear panel connectors 12
rear panel LEDs 14
reconfiguring software 175
redundant ROM 111
registering the server 50
regulatory compliance notices 259
reloading software 175
Remote Insight Lights-Out Edition board 28, 97
Remote Insight Lights-Out Edition II (RILOE II) 163, 174
remote management connector 28
remote ROM flash 179
required information 270
resetting the system 17
Resource Paqs 117
restoring 174
RILOE II (Remote Insight Lights-Out Edition II) 28, 77, 88, 97, 163, 174
riser interlock LED 20
RJ-45 connectors 12
RJ-45 network connector LEDs 14
ROM legacy USB support 114
ROM redundancy 111
ROM, updating 109
ROM-Based Setup Utility (RBSU) 148
ROMPaq utility 109, 111

S

safety considerations 44, 121
SCO 187
scripted installation 102
SCSI backplane LEDs 20, 23, 85
SCSI cabling 85
SCSI IDs 59, 60
SCSI termination 144
SCSI terminator 91
search engine 118
sense error codes 149
serial connector 12
serial number 107
series number 259
server fault indications flowchart 138
server features and options 51
server setup 39
server, front panel LEDs 11
server, real panel LEDs 14
server, rear panel components 12
Service Packs 173, 174
shipping carton contents 44
short circuits 162
simplex SCSI hard drive configuration 60, 88
SmartStart Autorun Menu 101
SmartStart Scripting Toolkit 102
SmartStart software 49
SmartStart, overview 101
software 172
start diagnosis flowchart 127
static electricity 265

StorageWorks Library and Tape Tools (L&TT) 110
Sun Solaris 174, 189
support 269
support packs 101
supported operating systems 118
Survey Utility 115
symbols on equipment 122
system board LEDs 20
System Erase Utility 175, 181
System Management Homepage 178
system power LED 11
Systems Insight Manager 111

T

Taiwan battery recycling notice 264
tape cartridge 152
tape drives 65
technical support 269
telephone numbers 269
temperature requirements 42
temperature, overtemperature LED 20
third-party devices 146
troubleshooting 121
troubleshooting sequence 121, 127

U

UID LEDs 11, 14
unknown problem 146
updating drivers 178
updating the operating system 174
updating the system ROM 111
UPS 142
USB connectors 12, 93
USB devices 93
USB support 114
utilities 101, 103, 106, 108, 109, 111, 113, 115, 116
utilities, deployment 102, 103, 107

V

VCA (Version Control Agent) 178
ventilation 40
Version Control Agent (VCA) 178
VGA 164
VHDCI SCSI connector 12
video connector 12
video problems 163

W

warnings 44, 123
website, HP 269