RETIRED: This document has been officially retired, and the base products listed herein are now considered obsolete and are no longer available for sale. Consequently, the information contained within may no longer be current. This document is provided exclusively for reference and informational purposes.

Overview

HP ProLiant DL380p Generation8 (Gen8)

The HP ProLiant DL380p Gen8 sets the next generation standards of 2U 2-socket rack servers for the industry. With enhanced configuration flexibility, unmatched performance, and leading energy efficient design the DL380p Gen8 offers the perfect solution for the dynamic compute requirements of today's demanding datacenters.

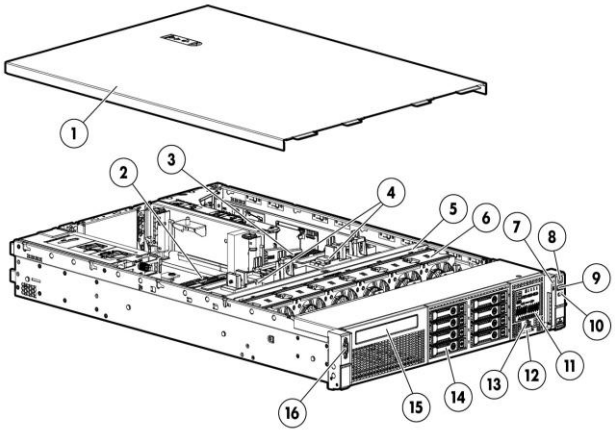

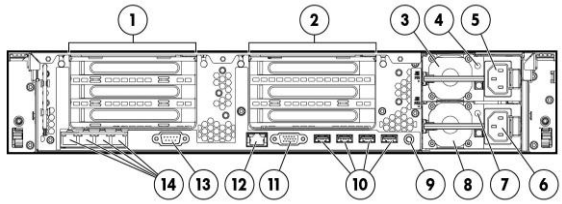

Front View:

1. Quick removal access panel
2. Second Intel Processor
3. First Intel Processor
4. 24 DIMM slots: DDR3 Registered (RDIMM), Load Reduced (LRDIMM), or Unbuffered (UDIMM) memory
5. Air Baffle
6. Hot-plug fans, full N+1 redundancy
7. Health LED
8. Power On /Standby button and system power LED button
9. USB connector
10. Unit ID LED
11. Systems Insight Display
12. Asset Tag
13. USB connector
14. Drive Bays
15. Optional Slim Optical Bay (SATA DVD-RW /ROM Optical Drive)
16. Video connector

Rear View:

1. PCIe 3.0 Slots 1, 2, 3-PCIe 2.0 top to bottom
2. PCIe 3.0 Slots 4-6 top to bottom
3. Power supply 1
4. Power supply 1 Power LED
5. Power supply 1 Power connection (with Intelligent PDU communication)
6. Power supply 2 Power connection (with Intelligent PDU communication)
7. Power supply 2 Power LED
8. Power supply 2
9. Unit ID LED/Button
10. USB connectors (4)
11. Video connector
12. iLO connector
13. Serial connector
14. FlexibleLOM ports (Shown: 4 ports 1Gb each /Optional: 2 ports 10Gb each)

What's New

- New HDD's
- New PRS options
- New 10GbE Networking
- FIO support for E5-2600 stopped

Standard Features

NOTE: For the Standard Features shipped in the "Factory Integrated Models", please see the "Configuration Information - Factory Integrated Models" section.

Processor
One of the following depending on model

E5-2600 v2 series Processors

Entry Processors
NOTE: All support up to 1333MHz DDR3 memory speeds.

Intel® Xeon® E5-2609 v2 (2.5GHz/4-core/10MB/6.4GT-s QPI/80W)

Intel® Xeon® E5-2603 v2 (1.8GHz/4-core/10MB/6.4GT-s QPI/80W)

Base Processors
NOTE: All support up to1600MHz DDR3 memory speeds.

Intel® Xeon® E5-2640 v2 (2.0GHz/8-core/20MB/7.2GT-s QPI/95W, DDR3-1600, HT, Turbo2-3/3/3/3/3/3/4/5)

Intel® Xeon® E5-2630 v2 (2.6GHz/6-core/15MB/7.2GT-s QPI/80W, DDR3-1600, HT, Turbo2-3/3/3/3/4/5)

Intel® Xeon® E5-2620 v2 (2.1GHz/6-core/15MB/7.2GT-s QPI/80W, DDR3-1600, HT, Turbo2-3/3/3/3/4/5)

Intel® Xeon® E5-2650L v2 (1.7GHz/10-core/25MB/8.0GT-s QPI/70W, DDR3-1600, HT, Turbo2-2/2/2/2/2/2/2/2/3/4)

Intel® Xeon® E5-2630L v2 (2.4GHz/6-core/15MB/7.2GT-s QPI/60W, DDR3-1600, HT, Turbo2-2/2/2/2/3/4)

Performance Processors
NOTE: All support up to 1866MHz DDR3 memory speeds.

Intel® Xeon® E5-2697 v2 (2.7GHz/12-core/30MB/8.0GT-s QPI/130W, DDR3-1866, HT, Turbo2-3/3/3/3/3/3/3/4/5/6/7/8)

Intel® Xeon® E5-2695 v2 (2.4GHz/12-core/30MB/8.0GT-s QPI/115W, DDR3-1866, HT, Turbo2-4/4/4/4/4/4/4/4/5/6/7/8)

Intel® Xeon® E5-2690 v2 (3.0GHz/10-core/25MB/8.0GT-s QPI/130W, DDR3-1866, HT, Turbo2-3/3/3/3/3/3/3/4/5/6)

Intel® Xeon® E5-2680 v2 (2.8GHz/10-core/25MB/8.0GT-s QPI/115W, DDR3-1866, HT, Turbo2-3/3/3/3/3/4/5/6/7/8)

Intel® Xeon® E5-2670 v2 (2.5GHz/10-core/25MB/8.0GT-s QPI/115W, DDR3-1866, HT, Turbo2-4/4/4/4/4/4/5/6/7/8)

Intel® Xeon® E5-2667 v2 (3.3GHz/8-core/25MB/8.0GT-s QPI/130W, DDR3-1866, HT, Turbo2-3/3/3/3/4/5/6/7)

Intel® Xeon® E5-2660 v2 (2.2GHz/10-core/25MB/8.0GT-s QPI/95W, DDR3-1866, HT, Turbo2-4/4/4/4/4/4/5/6/7/8)

Intel® Xeon® E5-2650 v2 (2.6GHz/8-core/20MB/8.0GT-s QPI/95W, DDR3-1866, HT, Turbo2-4/4/4/4/5/6/7/8)

Intel® Xeon® E5-2643 v2 (3.5GHz/6-core/25MB/8.0GT-s QPI/130W, DDR3-1866, HT, Turbo2-1/1/1/1/2/3)

Intel® Xeon® E5-2637 v2 (3.5GHz/4-core/15MB/8.0GT-s QPI/130W, DDR3-1866, HT, Turbo2- 1/1/2/3)

E5-2600 series Processors

Entry Processors
NOTE: All support up to 1066MHz memory speeds.

Intel® Xeon® E5-2609 (2.4GHz/4-core/10MB/6.4GT-s QPI/80W)

Intel® Xeon® E5-2603 (1.8GHz/4-core/10MB/6.4GT-s QPI/80W)

Base Processors
NOTE: All support up to1333MHz DDR3 memory speeds.

Standard Features

Intel® Xeon® E5-2640 (2.5GHz/6-core/15MB/7.2GT-s QPI/95W, DDR3-1333, HT, Turbo2- 3/3/4/4/5/5)

Intel® Xeon® E5-2630 (2.3GHz/6-core/15MB/7.2GT-s QPI/95W, DDR3-1333, HT, Turbo2- 3/3/4/4/5/5)

Intel® Xeon® E5-2620 (2.0GHz/6-core/15MB/7.2GT-s QPI/95W, DDR3-1333, HT, Turbo2- 3/3/4/4/5/5)

Intel® Xeon® E5-2630L (2.0GHz/6-core/15MB/8.0GT-s QPI/60W, DDR3-1333, HT, Turbo2- 3/3/4/4/5/5)

Performance Processors

NOTE: All support up to 1600MHz DDR3 memory speeds.

Intel® Xeon® E5-2690 (2.9GHz/8-core/20MB/8.0GT-s QPI/135W, DDR3-1600, HT, Turbo2- 4/4/4/5/5/7/7/9)

Intel® Xeon® E5-2680 (2.7GHz/8-core/20MB/8.0GT-s QPI/130W, DDR3-1600, HT, Turbo2- 4/4/5/5/5/7/8/8)

Intel® Xeon® E5-2670 (2.6GHz/8-core/20MB/8.0GT-s QPI/115W, DDR3-1600, HT, Turbo2- 4/4/5/5/6/6/7/7)

Intel® Xeon® E5-2667 (2.9GHz/6-core/15MB/8.0GT-s QPI/130W, DDR3-1600, HT, Turbo2- 3/3/3/4/5/6)

Intel® Xeon® E5-2665 (2.4GHz/8-core/20MB/8.0GT-s QPI/115W, DDR3-1600, HT, Turbo2- 4/4/5/5/6/6/7/7)

Intel® Xeon® E5-2660 (2.2GHz/8-core/20MB/8.0GT-s QPI/95W, DDR3-1600, HT, Turbo2- 5/5/6/6/7/7/8/8)

Intel® Xeon® E5-2650 (2.0GHz/8-core/20MB/8.0GT-s QPI/95W, DDR3-1600, HT, Turbo2- 4/4/5/5/5/7/8/8)

Intel® Xeon® E5-2650L (1.8GHz/8-core/20MB/8.0GT-s QPI/70W, DDR3-1600, HT, Turbo2- 2/2/3/3/4/4/5/5)

Intel® Xeon® E5-2643 (3.3GHz/4-core/10MB/8.0GT-s QPI/130W, DDR3-1600, HT, Turbo2- 1/1/2/2)

Intel® Xeon® E5-2637 (3.0GHz/2-core/5MB/8.0GT-s QPI/80W, DDR3-1600, HT, Turbo2- 5/5)

NOTE: HT indicates that the processor model supports Intel® Hyper-Threading Technology.
NOTE: Turbo indicates the maximum potential frequency increment when using Intel® Turbo Boost Technology, with 8, 7, 6, 5, 4, 3, 2 or 1 core(s) active.
NOTE: DDR3 speed is the maximum memory speed of the processor. Actual memory speed may depend on the quantity and type of DIMMs installed.
NOTE: Up to 2 processors supported. Mixing different processor models is not supported.
NOTE: For the Intel® C600 Chipset E5-2600 Series, the letter preceding the model number indicates the Product Line (E3, E5, E7); 2600x, 2 = number of CPUs in a Node, 6 is socket/segment designation, 00 = Processor SKU, and x = L for low power SKUs.

Cache Memory
One of the following depending on model

30MB (1x30MB) Level 3
NOTE: For Twelve-core processors.

25MB (1x25MB) Level 3
NOTE: For Ten-core processors.

20MB (1x20MB) Level 3
NOTE: For Eight-core processors.

15MB (1x15MB) Level 3
NOTE: For Six-core processors.

10MB (1x10MB) Level 3
NOTE: For Quad-core processors.

5MB (1x5MB) Level 3
NOTE: For Dual-core processors.

NOTE: All processor models above list the L3 Cache associated with that particular processor.

Chipset

Intel® C600 Series Chipset

Standard Features

	Intel® E5-2600 and E5-2600 v2 Processor Families **NOTE:** For more information regarding Intel chipsets, please see the following URL: http://www.intel.com/products/server/chipsets/.
Upgradeability	Upgradeable to 2 processors (24 Cores) **NOTE:** Processor upgrade available from Intel® Xeon® Processors E5-2600 to E5-2600 v2. Please contact HP Technology Sales (http://www.hp.com/support), your local HP Re-seller, or reference the following Customer Advisory: ProLiant Servers-Instructions for Upgrading an HP ProLiant Gen8 Server from an Intel Xeon Processor E5-2600 to an Intel Xeon Processor E5-2600 v2, regarding critical details before upgrading. An explanation of requirements and limitations are provided. Up to 24 DIMM slots available for higher Memory capacity FlexibleLOM connector for 1 Gigabit or 10 Gigabit networking options 8SFF Hard drive bays (16SFF with optional upgrade), 8LFF, 12LFF, or 25SFF Optional 3 slot riser (x16, x8, x8), or 2 slot (x16, x16) **NOTE:** To take advantage of the additional 3 PCI slot upgrade, the second processor must be installed. Redundant Power Supply Optical Drive (8SFF/8LFF only)
On System Management Chipset	HP iLO (Firmware: HP iLO 4) **NOTE:** For more information, visit: http://www.hp.com/go/ilo
Memory Protection	Advanced ECC **NOTE:** Advanced ECC uses single device data correction (SDDC) to detect and correct single and all multi-bit error that occurs within a single DRAM chip. Both x4 and x8 SDDC are supported (x8 requires lockstep mode). Online Spare **NOTE:** Memory online spare mode (also known as rank spare mode) detects a rank that is degrading and switches operation to the spare rank. Lock-step mode **NOTE:** Memory Lockstep mode is used to correct a single x8 DRAM device failure on a DIMM. The DIMMs in each paired memory channel must have identical HP part numbers.

Memory
One of the following depending on model

Type	HP SmartMemory DDR3 Load Reduced (LRDIMM), Registered (RDIMM) or Unbuffered (UDIMM)
DIMM Slots Available	24 (12 DIMM slots per processor /4 channels per processor/3 DIMMs per channel)
Maximum Capacity (LRDIMM)	768GB (24 x 32GB LRDIMM @1066MHz)
Maximum Capacity (RDIMM)	384GB (24x 16GB RDIMM @1333MHz)
Maximum Capacity (UDIMM)	128GB (16 x 8GB UDIMM @1600MHz)
Maximum Capacity (HDIMM)	768GB (24 x 32GB HDIMM @1333MHz)

NOTE: HP memory from previous generation servers are not qualified or warranted with this HP ProLiant Server. HP SmartMemory is required to realize the memory performance improvements and enhanced functionality listed in this document for Gen8. For additional information, please see the HP SmartMemory QuickSpecs at:
http://h18000.www1.hp.com/products/quickspecs/14225_na/14225_na.html
NOTE: LRDIMM, RDIMM, UDIMM, and HDIMMs are all distinct memory technologies and cannot be mixed

Standard Features

within a server. The majority of ProLiant Gen8 servers support RDIMM, UDIMM and LRDIMM.
NOTE: If only one processor is installed, only half the DIMM slots are available.
NOTE: UDIMM max DIMM population is 16.
NOTE: Depending on the memory configuration and processor model, the memory speed may run at 1866MHz, 1600MHz, 1333MHz, or 1066MHz. Please see Memory Population Table or the Online Memory Configuration Tool at: http://www.hp.com/go/ddr3memory-configurator.

Network Controller
One of the following depending on model

HP ProLiant Gen8 servers offer a new flexible network technology - FlexibleLOMs. The HP ProLiant DL380p Gen8 server offers the customer the choice of 1Gb, 10Gb, or 10Gb base-T networking solutions. For additional details see the Networking Section of this document.

Entry Models	HP Ethernet 1Gb 4-port 331FLR Adapter
Base Models	HP Ethernet 1Gb 4-port 331FLR Adapter
25SFF Models	HP FlexFabric 10Gb 2-port 533FLR-T Adapter
Performance Models	HP Ethernet 10Gb 2-port 530FLR-SFP+ Adapter
One of the following depending on Model	HP Ethernet 1Gb 4-port 331FLR Adapter
	HP FlexFabric 10Gb 2-port 533FLR-T Adapter
Energy Star Models	HP Ethernet 1Gb 4-port 331FLR Adapter

Expansion Slots

Primary Riser (Standard)

Expansion Slots #	Technology	Bus Width**	Connector Width	Bus Number*	Form Factor	Notes
1	PCIe 3.0	X16	X16	7	Full Length, Full Height Slot	Proc 1
2	PCIe 3.0	X8	X8	10	Half Length, Full Height Slot	Proc 1
3	PCIe 2.0	X4	X8	13	Half Length, Full Height Slot	Chipset

* Default bus assignment (in decimal). Inserting cards with PCI bridges may alter the actual bus assignment number
** Indicates the number of physical electrical lanes running to the connector.
NOTE: When populating the second optional riser slot, the second processor must be installed.
NOTE: All slots support up to 150w PCIe cards, but an additional Power Cord Option is required (PN 669777-B21). See Option Section below for offering.

PCIe Riser (Optional 3-slot)

Expansion Slots #	Technology	Bus Width**	Connector Width	Bus Number*	Form Factor	Notes
4	PCIe 3.0	X16	X16	16	Full length, full height slot	Proc 2
5	PCIe 3.0	X8	X8	20	Half length, full height slot	Proc 2
6	PCIe 3.0	X8	X8	23	Half length, full height slot	Proc 2

* Default bus assignment (in decimal). Inserting cards with PCI bridges may alter the actual bus assignment number

Standard Features

** Indicates the number of physical electrical lanes running to the connector.
NOTE: When populating the second optional riser slot, the second processor must be installed.
NOTE: All slots support up to 150w PCIe cards, but an additional Power Cord Option is required (669777-B21). See Option Section below for offering

PCIe Riser (Optional 2-slot)

Expansion Slots #	Technology	Bus Width**	Connector Width	Bus Number*	Form Factor	Notes
4	PCIe 3.0	X16	X16	16	Full length, Full height slot	Proc 2
5	PCIe 3.0	X16	X16	16	Half Length, Full Height	Proc 2

* Default bus assignment (in decimal). Inserting cards with PCI bridges may alter the actual bus assignment number
** Indicates the number of physical electrical lanes running to the connector.

HP Server ROM

HP ROM (Read Only Memory) is now digitally signed using HP's Corporate Signing Service. This signature is verified before the flash process starts, reducing accidental programming and preventing malicious efforts to corrupt system ROM.

HP ROM provides for essential initialization and validation of hardware components before control is passed to the customer-installed operating system. The ROM also provides the capability of booting from various fixed media (HDD, CD-ROM) and removable media (USB), to continue operation to the operating system.

HP ROM performs very early configuration of the video controller, to allow monitoring of initialization progress via an attached monitor. If configuration or hardware errors are discovered during this early phase of hardware initialization, suitable messages are now displayed on the connected monitor. Additionally, these configuration or hardware errors are logged to the Integrated Management Log (IML) to assist in diagnosis.

HP's ProLiant ROM is used to configure the following:

- Processor and chipset status registers
- System memory, memory map, and memory initialization
- System hardware configuration (Integrated PCI devices and optional PCIe cards).
- Customer-specific BIOS configuration (using the HP ROM-Based Setup Utility (RBSU).

NOTE: For further information, please refer to HP's RBSU (ROM based setup utility) user guide: http://www.hp.com/support/rbsu.

Storage Controller One of the following depending on model

Entry Models	HP Smart Array P420i/ZM (RAID 0/1/1+0)
Base Models	HP Smart Array P420i/1GB with FBWC (RAID 0/1/1+0/5/5+0/6/6+0)
25SFF Models	HP Smart Array P420i/2GB with FBWC (RAID 0/1/1+0/5/5+0/6/6+0)
Performance Models	HP Smart Array P420i/2GB with FBWC (RAID 0/1/1+0/5/5+0/6/6+0)
Energy Star Models	HP Smart Array P420i/1GB with FBWC (RAID 0/1/1+0/5/5+0/6/6+0)

Internal Storage Devices

Diskette Drive	None
Optical Drive	Ships standard in Performance Models
	Optional: DVD-ROM, DVD-RW
Hard Drives	None ship standard

Standard Features

	Drive Bays	Standard: 8SFF drive bays total with Optical Bay, 8 LFF drive bays total with Optical Bay, 12LFF drive bays total, or 25SFF drive bays total Optional: +8SFF drive bay (total of 16SFF drive bays) **NOTE:** The Optical drive bay is not available with the 12LFF model, 25SFF model, or +8SFF drive bay optional upgrade. **NOTE:** The 8LFF, 12LFF, and 25SFF drive cage versions are not field upgradeable options from the 8SFF model. **NOTE:** The optional +8SFF drive bay requires an additional internal storage controller be selected. HP recommends the HP Smart Array P420/1GB FBWC 6Gb 2-ports Int SAS Controller (P/N 631670-B21). **NOTE:** All Pre-configured Models come populated with some hard drive blanks installed. Should the customer need additional hard drive blanks, they can order more using either P/N 666987-B21: HP SFF Gen8 Hard Drive Blank Kit or P/N 666986-B21: HP LFF Gen8 Hard Drive Blank Kit. The part numbers for single HDD blanks below are also provided should the customer require replacement HDD blanks for their server.

Maximum Internal Storage	Hot Plug SFF SAS	50.0TB	25 x 2TB (with optional SFF drive cage)
	Hot Plug SFF SATA	50.0TB	25 x 2TB (with optional SFF drive cage)
	Hot Plug LFF SAS	96.0TB	12 x 8TB (with optional LFF drive cage)
	Hot Plug LFF SATA	96.0TB	12 x 8TB (with optional LFF drive cage)
	Hot Plug SFF SAS SSD	48.0TB	25 x 1.92TB (with optional SFF drive cage)
	Hot Plug SFF SATA SSD	96TB	25 x 3.84TB (with optional LFF drive cage)
	Hot Plug LFF SAS SSD	19.2TB	12 x 1.6TB (with optional LFF drive cage)
	Hot Plug LFF SATA SSD	46.08TB	12 x 3.84TB (with optional LFF drive cage)

Interfaces	Serial	1
	Video	2 (1 front, 1 back) not active simultaneously
	FlexibleLOM Network Ports	Some models come standard with 4 x 1Gb ports while others come with 2 x 10Gb or 2 x 10Gb base-T ports (See HP Networking section below for more details and options).
	HP iLO Remote Management Network Port	1 Gb Dedicated
	SD slot	1 Internal Secure **NOTE:** The SD slot is not a hot-pluggable device. Customers should not attempt to plug an SD card into the SD slot while the server is powered.
	USB 2.0 Ports	Up to 7 total: up to 2 front, 4 back, 1 internal **NOTE:** Only 1 front USB port available for 12LFF and 25SFF models.

Industry Standard Compliance	ACPI 2.0b Compliant PCIe 3.0 Compliant PXE Support WOL Support Microsoft® Logo certifications USB 2.0 Compliant

Server Power Cords	All Pre-configured servers ship with a high voltage server-to-PDU power cord. **NOTE:** HP ProLiant DL servers no longer ship standard with a 12-foot NEMA 5-15P to C13 power cord that connects to 110V US wall outlets in a home or office. ProLiant DL servers are primarily connected to power distribution units (PDUs) in data center racks and now ship standard with a PDU 6-foot C-14

Standard Features

	to C13 power cord (A0K02A). If a user wishes to power a ProLiant DL server using a 110V receptacle (NEMA-15), the 6-foot NEMA 5-15 to C13 power cord must be ordered separately (AF556A). See Power Cords section for Power Cord options.
Power Specifications	To review typical system power ratings use the HP Power Advisor which is available via the online tool located at URL: http://www.hp.com/go/proliant-energy-efficient or http://www.hp.com/go/hppoweradvisor. **NOTE:** Power Specification and Technical Content for supported power supplies can be found at: http://h18000.www1.hp.com/products/quickspecs/14209_na/14209_na.html
Common Slot Power Supply	**NOTE:** Mixing of power supplies in the same server is not supported. All power supplies inside a server must be exactly the same model. Mixing Gold, Platinum, and Platinum Plus certified power supplies is not supported. HP's Common Slot (CS) power supplies allow for commonality of power supplies across a wide range of ProLiant and Integrity servers, as well as HP Storage solutions, and are designed to provide the highest power supply efficiency without degrading system performance. HP CS power supplies are tested by the Electric Power Research Institute (EPRI) and certified through the ECOS 80 Plus power supply program. HP CS power supply options provide efficiency ratings of up to 94% (80 Plus Platinum) and are available in three power output options - 460W, 750W, and 1200W - allowing the customer to "right-size" a power supply for their specific server configuration. All HP Common Slot power sources are UL, CE Mark Compliant, hot-plug and support redundant configurations. **NOTE:** Mixing of power supplies in the same server is not supported. All power supplies must be of the same output and efficiency rating. If non-matched power supplies are inserted you will get errors and operation will fail. HP CS Platinum Plus power supplies are required when enabling HP's Intelligent Power Discovery (IPD) solution. IPD is the first technology to create an automated, energy-aware network between IT systems and facilities. This allows your company to reclaim millions of dollars in wasted power capacity and downtime costs across data centers. For more information on HP's IPD solution, go to http://www.hp.com/go/ipd. It is highly recommended that you use the HP Power Advisor in defining the "Right-Size" power supply for your needs. HP Power Advisor can be accessed at: http://www.hp.com/go/hppoweradvisor. **NOTE:** The 80 PLUS program is a unique forum that unites electric utilities, the computer industry, and consumers in an effort to bring energy efficient technology solutions to the marketplace. 80 Plus independently tests power supply efficiency and publicly posts the results on 80Plus.org. Redundant Power: Optional (1+ 1 or n+n redundant) power supplies can be purchased through power supply option kits (see Power Supplies for part numbers). **NOTE:** Power Specification and Technical Content for supported power supplies can be found at: http://h18000.www1.hp.com/products/quickspecs/14209_na/14209_na.html
System Fans One of the following depending on model	2P Models have (6) (N+1 redundancy standard) 1P Models have (4) (N+1 redundancy standard)
Required Cabling	For required cabling information, refer to the HP Web site at: http://www.hp.com/servers/dl380p-gen8.

Standard Features

Operating Systems and Virtualization Software Support for ProLiant Servers		Microsoft Windows Server Canonical Ubuntu Red Hat Enterprise Linux (RHEL) SUSE Linux Enterprise Server (SLES) Oracle Linux VMware Citrix XenServer **NOTE:** For more information on HP's Certified and Supported ProLiant Servers for OS and Virtualization Software and latest listing of software drivers available for your server, please visit our Support Matrix at: http://www.hp.com/go/ossupport and our driver download page: http://www.hp.com/support/DL380pGen8
Graphics		Integrated Matrox G200 video standard • 1280 x 1024 (32 bpp) • 1920 x 1200 (16 bpp) HP iLO 4 On System Management Memory • 16 MB Flash • 256 MB DDR 3 with ECC (112 MB after ECC and video)
Form Factor One of the following depending on model		2U Rack form factor 8 SFF & 25SFF Drive Bay Version: 3.44 (8.74 cm) Height x 17.54" (44.55 cm) Width x 27.5" (69.85 cm) Length 8 LFF & 12LFF Drive Bay Version: 3.44 (8.74 cm) Height x 17.54" (44.55 cm) Width x 29.5" (74.94cm) Length
On System Management	HP iLO Management Engine	• HP iLO Management Engine is a comprehensive set of embedded management features supporting the complete lifecycle of the server, from initial deployment, through ongoing management, to service alerting and remote support. HP iLO Management Engine comes standard on all HP ProLiant Gen8 servers. The HP iLO Management Engine portfolio includes: ○ **HP iLO:** The HP iLO (Integrated Lights-Out) management processor is the core foundation for the HP iLO Management Engine ○ **HP Agentless Management:** Provides built in server health monitoring and alerting capability without OS agents, that starts working the moment a power cord and an Ethernet cable are connected. ○ **HP Active Health System:** Always on, continuous monitoring for increased stability and shorter downtimes; 100% configuration history; Health and service alerts and easy export and upload to Service and Support. ○ **HP Intelligent Provisioning:** Lets customers provision and configure a single server without any separate media. No more SmartStart CDs or Smart Update Firmware DVD are needed. ▪ To start Intelligent Provisioning:

- Press the F10 key during the ProLiant Gen8 server boot process (also known as power on self-test or POST).
- Please go to the Intelligent Provisioning website at http://www.hp.com/go/intelligentprovisioning for additional information and to view usage videos.
- Use the Service Pack for ProLiant (SPP) at http://www.hp.com/go/spp to get firmware and software updates.

- **HP iLO Mobile App:** Enables the ability to access, deploy, and manage your server anytime from anywhere from select smartphones and mobile devices. For additional information please visit: http://www.hp.com/go/ilo/mobileapp

NOTE: For more information, visit: http://www.hp.com/go/ilo or HP iLO Management Engine technologies whitepaper

HP Insight management	HP Service Pack for ProLiant (SPP)	HP Service Pack for ProLiant (SPP) and HP Smart Update Manager (HP SUM) provide a comprehensive approach to firmware and system software maintenance. Together they provide better operating stability and ensure maximum uptime. The SPP will be updated at a predictable cadence, typically coinciding with new HP server hardware launches. By enabling firmware to be updated online and integrating firmware and system software updates in one operation, HP SUM and the SPP offer faster updates of individual. Further improving system uptime and stability is the fact that HP provides 12 months of support for each Service Pack for ProLiant release. The user experience around HP SUM and the SPP has been improved in several ways, starting with the web download. A single web page provides access to a single download containing both the latest version of HP SUM and the latest SPP. Optional smaller subsets with only specific types of servers or specific operating systems are offered to save on download time. The HP SUM application provides a straightforward, intuitive user interface that guides the user through the steps of discovery, analyses and update, providing comprehensive information on available updates, criticality and interdependencies. This information is also available in reports. By providing the option of multiple local or shared repositories which can be easily updated from hp.com, HP SUM provides the tools to optimize stability and consistency throughout the company. While HP SUM and the SPP recommend the combinations of firmware and system software that HP has found to be the best practice, the application gives customers the flexibility to set their own specific baseline. The Service Pack for ProLiant has been rigorously tested with specific attention for interaction between firmware, drivers and agents both within the server This testing ensures the highest quality as well as providing the input for HP SUM to deploy updates taking into account all interdependencies, when determining the correct updates and order of update deployment. **NOTE:** The Service Pack for ProLiant (which includes HP SUM) can be

Standard Features

	downloaded from http://www.hp.com/go/spp/download. More information can be found: http://www.hp.com/go/SmartUpdate, http://www.hp.com/go/spp and http://www.hp.com/go/hpsum
Security	Power-on password Serial interface control Administrator's password
Warranty	This product is covered by a global limited warranty and supported by HP Services and a worldwide network of HP Authorized Channel Partners resellers. Hardware diagnostic support and repair is available for three years from date of purchase. Support for software and initial setup is available for 90 days from date of purchase. Enhancements to warranty services are available through HP Care Pack services or customized service agreements. Hard drives have either a one year or three year warranty; refer to the specific hard drive QuickSpecs for details. **NOTE:** Server Warranty includes 3-Year Parts, 3-Year Labor, 3-Year Onsite support with next business day response. Warranty repairs may be accomplished through the use of Customer Self Repair (CSR) parts. These parts fall into two categories: 1) Mandatory CSR parts are designed for easy replacement. A travel and labor charge will result when customers decline to replace a Mandatory CSR part; 2) Optional CSR parts are also designed for easy replacement but may involve added complexity. Customers may choose to have HP replace Optional CSR parts at no charge. Additional information regarding worldwide limited warranty and technical support is available at: http://h18004.www1.hp.com/products/servers/platforms/warranty/index.html

Optional Features

HP Insight management	HP Insight Control	HP Insight Control, a product option, delivers essential infrastructure management that can help save time and money by making it easy to deploy, migrate, monitor, remote control, and optimize your IT infrastructure through a single, simple management console. HP Insight Control also supports Location and Power Discovery Services to automate many configuration, asset tracking, and power management tasks to speed implementation and prevent downtime. For more information, see http://www.hp.com/go/insightcontrol. HP Insight Control includes one year of 24 x 7 HP Software Technical Support and Update Service ensuring rapid access to HP support staff and proactive delivery of software updates. For more information about this service, see: http://www.hp.com/services/insight.
	HP iLO Advanced	HP Integrated Lights-Out Advanced License a product option, providing smart remote server management without compromise. iLO Advanced unlocks the full set of remote administration functionality for all HP ProLiant servers by activating the full Virtual Keyboard Video and Mouse remote console, multi-user collaboration, console record and replay, GUI-based and scripted virtual media and virtual folders, and enhanced security and power management functionality. For more information, see: http://www.hp.com/go/iloadvanced
	HP Matrix Operating Environment	The HP Matrix Operating Environment (Matrix OE) for ProLiant and Integrity servers is an integrated command center that helps you instantly adjust to dynamic business demands. This advanced infrastructure management software lets you reduce the cost of common data center tasks by up to 40 percent while keeping pace with your changing business. The HP Matrix OE includes the automated provisioning, optimization, and recovery management capabilities for HP CloudSystem Matrix, the ideal platform for private cloud and Infrastructure as a Service (IaaS). **NOTE:** For more information, visit: http://www.hp.com/go/matrixoe
High Performance Clusters	HP Cluster Platforms	HP Cluster Platforms are specifically engineered, factory-integrated large-scale ProLiant clusters optimized for High Performance Computing, with a choice of servers, networks and software. Operating system options include specially priced offerings for Red Hat Enterprise Linux and SUSE Linux Enterprise Server, as well as Microsoft Windows HPC Server. A Cluster Platform Configurator simplifies ordering. http://www.hp.com/go/clusters
	HP HPC Interconnects	High Performance Computing (HPC) interconnect technologies are available for this server as part of the HP Cluster Platform portfolio. These high-speed InfiniBand and Gigabit interconnects are fully supported by HP when integrated within an HP cluster. Flexible, validated solutions can be defined with the help of configuration tools. http://www.hp.com/techservers/clusters/ucp/index.html
	HP Insight Cluster Management Utility	HP Insight Cluster Management Utility (CMU) is an HP-licensed and HP-supported suite of tools that are used for lifecycle management of hyperscale clusters of Linux ProLiant systems. CMU includes software for the centralized provisioning, management and monitoring of nodes. CMU makes the administration of clusters user friendly, efficient, and effective. http://www.hp.com/go/cmu

Optional Features

Storage Software

Whether you need to solve a specific data protection, archiving, or storage command and control challenge, or deliver on strategic consolidation, compliance, or continuity initiatives, look no further than HP storage software. Our storage software helps you reduce costs, simplify storage infrastructure, protect vital assets and respond faster to business opportunities.

Storage software that gets the job done:

- **Data Protection and Recovery Software**
  Whether you're a large enterprise or a smaller business, HP data protection and recovery software will cost-effectively protect you against disaster and ensure business continuity.
- **Data Archive and Migration Software**
  HP's storage software enables you to comply with data retention and retrieval requirements, improve application performance, and reduce costs by efficiently migrating infrequently accessed or less valuable data to lower cost storage.
- **Storage Resource Management Software (SRM)**
  HP's storage resource management software reduces operational costs and provides the command and control foundation you need to efficiently manage and visualize your physical and virtual environments.
- **Data Replication Software**
  HP offers array-based and host-based replication software for use in disaster recovery, testing, application development and reporting.
- **Storage Device Management Software**
  Maximize your investment in HP storage and networking with software that enables hardware-specific configuration, performance tuning and connectivity management.
- **HP StoreVirtual VSA**
  With HP StoreVirtual VSA you can use the power of virtualization to turn a set of heterogeneous and disconnected physical disk drives in your servers and storage devices into a single pool of logical storage capacity.

NOTE: For more information available Storage Software including QuickSpecs, please see: http://www.hp.com/go/storage/software

HP StoreVirtual VSA

HP StoreVirtual VSA allows you to create fully featured shared storage on a VMware vSphere or Microsoft Hyper-V virtualized server. This server model starting November 2013, includes a limited license for HP StoreVirtual VSA software with 1TB of capacity. To download the license key and StoreVirtual VSA software, visit http://www.hp.com/go/unlockVSA.
NOTE: You will need your server serial number in order to complete the registration form.

HP Insight Online

HP Insight Online is a new addition to the HP Support Center for one stop, secure access to product and HP support information personalized to your IT environment. Insight Online can automatically display devices remotely monitored by HP Insight Remote Support. With Insight Online's easy navigation you can efficiently track your IT support contracts and device status from anywhere and at anytime.
http://www.hp.com/go/insightonline

HP Proactive Insight experience

Prevent problems with innovative, automated monitoring tools and proactive services. The HP Proactive Insight experience consist of using Insight Online, Insight Remote Support, and Proactive Care Support Service as one integrated solution. The Proactive Insight experience provides you with expert advice and personalized, cloud-based automated IT support, helping to prevent unplanned down time and solve problems quickly. For more information, visit:
http://www.hp.com/go/proactiveinsightexperience

Factory Express Portfolio for Servers and Storage

HP Factory Express offers configuration, customization, integration and deployment services for HP servers and storage products. Customers can choose how their factory solutions are built, tested, integrated, shipped and deployed.

Optional Features

Factory Express offers service packages for simple configuration, racking, installation, complex configuration and design services as well as individual factory services, such as image loading, asset tagging, and custom packaging. HP products supported through Factory Express include a wide array of servers and storage: HP Integrity, HP ProLiant, HP ProLiant Server Blades, HP BladeSystem, HP 9000 servers as well as the MSAxxxx, EVA7xxx, EVA, XP, rackable tape libraries and configurable network switches.

For more information on Factory Express services for your specific server model please contact your sales representative or go to: http://www.hp.com/go/factory-express.

HP Simple Configurator

SCE is a guided self-service tool to help sales and non-technical people provide customers with initial configurations in 3 to 5 minutes. You may then send the configuration on for configuration help, or use in your existing ordering processes. If you require "custom" rack configuration or configuration for products not available in SCE, please contact HP's Customer Business Center or an Authorized Partner for assistance. http://www.hp.com/products/configurator

Service and Support

Service and Support

HP Technology Services for Industry Standard Servers
HP Technology Services delivers confidence, reduces risk and helps customers realize agility and stability. Connect to HP to help prevent problems and solve issues faster. Our support technology lets you to tap into the knowledge of millions of devices and thousands of experts to stay informed and in control, anywhere, any time.

Protect your business beyond warranty with HP Care Pack Services
HP Care Pack Services enable you to order the right service level, length of coverage and response time as you purchase your new server, giving you full entitlement for the term you select.

Optimized Care

Supports maintaining servers at optimum performance availability

HP Proactive Care with 6 hour call-to-repair commitment, three year Care Pack Service
HP Proactive Care helps prevent problems and stabilize IT by utilizing secure, real-time, predictive analytics and proactive consultations when your products are connected to HP. This Care Pack Service combines three years' proactive reporting and advice with our highest level reactive coverage and enhanced escalation management, HP's 24x7, six hour call-to-repair hardware commitment. HP is the only leading manufacturer who makes this level of coverage available as a standard service offering for your most valuable servers. Service includes 24x7 collaborative software support for leading industry standard software running on your HP ProLiant server.
http://h20195.www2.hp.com/v2/GetPDF.aspx/4AA3-8855ENW.pdf

Standard Care

Service recommendation that maintains high level of server availability

HP Proactive Care with 24x7 coverage, three year Care Pack Service
HP Proactive Care helps prevent problems and stabilize IT by utilizing secure, real-time, predictive analytics and proactive consultations when your products are connected to HP. This Care Pack Service combines three years' proactive reporting and advice with our 24x7 coverage and enhanced escalation management, four hour hardware response time and two hour call back for software questions on leading industry standard software running on your HP ProLiant server.
http://h20195.www2.hp.com/v2/GetPDF.aspx/4AA3-8855ENW.pdf

Related Services

HP ProLiant Server Hardware Installation
Provides for the basic hardware installation of HP branded servers, storage devices and networking options to assist you in bringing your new hardware into operation in a timely and professional manner.
http://h20195.www2.hp.com/V2/GetPDF.aspx/5981-9356EN.pdf

Factory Express for Servers and storage
HP Factory Express offers configuration, customization, integration and deployment services for HP servers and storage products. Customers can choose how their factory solutions are built, tested, integrated, shipped and deployed. For more information on Factory Express services for your specific server model please contact your sales representative or go to:
http://www.hp.com/go/factory-express.

Data Privacy Services
Protect your data through better media management. HP Data privacy services help manage and protect sensitive data to reduce the risk of unauthorized access to private information and help meet compliance requirements. Our retention services allow you to keep drives and other devices upon failure, our removal services provide convenient data sanitization and our recovery services allow you to safely retire IT assets and capture any remaining value from the hardware.
http://www.hp.com/services/dataprivacy

Service and Support

	Additional HP Care Pack services can be found at: http://www.hp.com/go/cpc
Get connected to HP to improve your support experience	Prevent problems with innovative, automated monitoring tools and proactive services. Combining Proactive Care Services with our remote support technology such as Insight Online provides you with expert advice and personalized, cloud-based automated IT support, helping to prevent unplanned down time and solve problems quickly. For more information, visit: http://www.hp.com/go/proactiveinsightexperience
HP Support Center	Personalized online support portal with access to information, tools and experts to support HP business products. Submit support cases online, chat with HP experts, access support resources or collaborate with peers. Learn more http://www.hp.com/go/hpsc HP's Support Center Mobile App* allows you to resolve issues yourself or quickly connect to an agent for live support. Now, you can get access to personalized IT support anywhere, anytime. HP Insight Remote Support and HP Support Center are available at no additional cost with a HP warranty, HP Care Pack, or HP contractual support agreement. *HP' Support Center Mobile App is subject to local availability
Parts and Material	HP will provide HP-supported replacement parts and materials necessary to maintain the covered hardware product in operating condition, including parts and materials for available and recommended engineering improvements. Parts and components that have reached their maximum supported lifetime and/or the maximum usage limitations as set forth in the manufacturer's operating manual, product quick-specs, or the technical product data sheet will not be provided, repaired, or replaced as part of these services. The defective media retention service feature option applies only to Disk or eligible SSD/Flash Drives replaced by HP due to malfunction.
For more information	To learn more on HP ProLiant servers, please contact your HP sales representative or HP Authorized ServiceOne Channel Partner. Or visit: http://www.hp.com/services/proliant

Pre-configured Models

NOTE: For the Standard Features shipped in the "Factory Integrated Models", please see the "Configuration Information - Factory Integrated Models" section.
NOTE: Pre-configured models ship with the configurations below. Options can be selected from the Core or Additional options section of this QuickSpecs.
NOTE: HP does not allow factory integration of options into pre-configured models. Any additional options purchased will be shipped separately.
NOTE: If you desire a custom configuration please see "Configuration Information - Factory Integrated Models" section of this QuickSpecs.
NOTE: All Pre-configured Models come populated with some hard drive blanks installed. Should the customer need additional hard drive blanks, they can order more using either P/N 666987-B21: HP SFF Gen8 Hard Drive Blank Kit or P/N 666986-B21: HP LFF Gen8 Hard Drive Blank Kit.

Entry Models

E5-2600 v2 series Processors

HP ProLiant DL380p Gen8 E5-2609v2 1P 4GB-R P420i/ZM 460W PS Server 704560-001	**Processor(s)**	(1) Intel® Xeon® E5-2609 v2 (2.5GHz/4-core/10MB/6.4GT-s QPI/80W)
	Cache Memory	10MB (1x10MB) Level 3
	Memory	4GB (1x4GB) PC3L-12800R (DDR3-1600LV) Registered DIMMs **NOTE:** Total 24 DIMM slots available with processor upgrade (2P configuration)
	Network Controller	HP Ethernet 1Gb 4-port 331FLR Adapter
	Storage Controller	HP Smart Array P420i/ZM (RAID 0/1/1+0)
	Hard Drive	None ship standard
	Internal Storage	Standard: 8 SFF SAS/SATA HDD Bays; includes 6 SFF hard drive blanks Optional: +8 SFF (total of 16) SFF SAS/SATA HDD Bays
	Optical Drive Bay	Optional Slim Optical Bay (SATA DVD-RW/ROM Optical Drive)
	PCI-Express Slots	3 PCIe slots (+3 PCIe slots available with upgrade option)
	Power Supply	(1) HP 460W Common Slot Gold Hot Plug Power Supply (92% Efficient)
	Fans	(4) (N+1 redundancy standard)
	Management	HP iLO Management Engine (standard) Optional: HP Insight Control
	Energy Star	N/A
	Form Factor	Rack (2U), HP Friction Rail Kit **NOTE:** The HP 2U Gen8 Cable Management Arm is not available when using Friction Rails. **NOTE:** To assist in the installation of the server into the rack an optional installation tool is available by contacting your local services representative (p/n 695539-001). **Caution:** HP recommends that a minimum of two people are required for all Rack Server installations. Please refer to your installation instructions for proper tools and number of people to use for any installation.
	Warranty	Server Warranty includes 3-Year Parts, 3-Year Labor, 3-Year Onsite support with next business day response.

Base Models

HP ProLiant DL380p Gen8 E5-2630v2 1P 16GB-R P420i/1GB FBWC 460W PS Server 704559-001	**Processor(s)**	(1) Intel® Xeon® E5-2630 v2 (2.6GHz/6-core/15MB/7.2GT-s QPI/80W, DDR3-1600, HT, Turbo2- 3/3/3/3/4/5)
	Cache Memory	15MB (1x15MB) Level 3
	Memory	16GB (1x16GB) PC3L-12800R (DDR3-1600LV) Registered DIMMs **NOTE:** Total 24 DIMM slots available with processor upgrade (2P

Pre-configured Models

		configuration)
	Network Controller	HP Ethernet 1Gb 4-port 331FLR Adapter
	Storage Controller	HP Smart Array P420i/1GB FBWC (RAID 0/1/1+0/5/5+0/6/6+0)
	Hard Drive	None ship standard
	Internal Storage	Standard: 8 SFF SAS/SATA HDD Bays; includes 6 SFF hard drive blanks Optional: +8 SFF (total of 16) SFF SAS/SATA HDD Bays
	Optical Drive Bay	Optional: Slim Optical Bay (SATA DVD-RW/ROM Optical Drive)
	PCI-Express Slots	3 PCIe slots (+3 PCIe slots available with upgrade option)
	Power Supply	(1) HP 460W CS Platinum Plus Hot Plug Power Supply (94% Efficient)
	Fans	(4) (N+1 redundancy standard)
	Management	HP iLO Management Engine (standard) Optional: HP Insight Control
	Energy Star	N/A
	Form Factor	Rack (2U), HP Ball Bearing Rail Kit without Cable Management Arm **NOTE:** To assist in the installation of the server into the rack an optional installation tool is available by contacting your local services representative (p/n 695539-001). **Caution:** HP recommends that a minimum of two people are required for all Rack Server installations. Please refer to your installation instructions for proper tools and number of people to use for any installation.
	Warranty	Server Warranty includes 3-Year Parts, 3-Year Labor, 3-Year Onsite support with next business day response.

25SFF Models

NOTE: This Model is Energy Star Certified.

E5-2600 v2 series Processors

HP ProLiant DL380p Gen8 E5-2650v2 2P 32GB-R P420i/2GB FBWC 750W RPS Server 704558-001	**Processor(s)**	(2) Intel® Xeon® E5-2650 v2 (2.6GHz/8-core/20MB/8.0GT-s QPI/95W, DDR3-1866, HT, Turbo2- 4/4/4/4/5/6/7/8)
	Cache Memory	20MB (1x20MB) Level 3
	Memory	32GB (2x16GB) PC3-14900R (DDR3-1866) Registered DIMMs **NOTE:** Total 24 DIMM slots available with processor upgrade (2P configuration)
	Network Controller	HP FlexFabric 10Gb 2-port 533FLR-T Adapter
	Storage Controller	HP Smart Array P420i/2GB FBWC (RAID 0/1/1+0/5/5+0/6/6+0)
	Hard Drive	None ship standard
	Internal Storage	Standard: 25 SFF SAS/SATA HDD Bays; includes 23 SFF hard drive blanks
	Optical Drive Bay	Not available in 25 SFF model
	PCI-Express Slots	6 PCIe slots
	Power Supply	(2) HP 750W CS Platinum Plus Hot Plug Power Supply (94% Efficient)
	Fans	(6) (N+1 redundancy standard)
	Management	HP iLO Management Engine (standard) Optional: HP Insight Control
	Energy Star	Meets Energy Star requirements
	Form Factor	Rack (2U), HP Ball Bearing Rail Kit without Cable Management Arm **NOTE:** To assist in the installation of the server into the rack an optional installation tool is available by contacting your local services representative (p/n 695539-001). **Caution:** HP recommends that a minimum of two people are required for

Pre-configured Models

		all Rack Server installations. Please refer to your installation instructions for proper tools and number of people to use for any installation.
	Warranty	Server Warranty includes 3-Year Parts, 3-Year Labor, 3-Year Onsite support with next business day response.

Performance Models

NOTE: These Models are Energy Star Certified.

HP ProLiant DL380p Gen8 E5-2690v2 2P 32GB-R P420i/2GB FBWC 750W RPS Server 709943-001	**Processor(s)**	(2) Intel® Xeon® E5-2690 v2 (3.0GHz/10-core/25MB/8.0GT-s QPI/130W, DDR3-1866, HT, Turbo2- 3/3/3/3/3/3/3/4/5/6)
	Cache Memory	25MB (1x25MB) Level 3
	Memory	32GB (2x16GB) PC3-14900R (DDR3-1866) Registered DIMMs **NOTE:** Total 24 DIMM slots available with processor upgrade (2P configuration)
	Network Controller	HP FlexFabric 10Gb 2-port 533FLR-T Adapter
	Storage Controller	HP Smart Array P420i/2GB FBWC (RAID 0/1/1+0/5/5+0/6/6+0)
	Hard Drive	None ship standard
	Internal Storage	Standard: 8 SFF SAS/SATA HDD Bays; includes 6 SFF hard drive blanks Optional: +8 SFF (total of 16) SFF SAS/SATA HDD Bays
	Optical Drive Bay	DVD-RW standard
	PCI-Express Slots	6 PCIe slots
	Power Supply	(2) HP 750W CS Platinum Plus Hot Plug Power Supply (94% Efficient)
	Fans	(6) (N+1 redundancy standard)
	Management	HP iLO Management Engine (standard) Optional: HP Insight Control
	Energy Star	Meets Energy Star requirements
	Form Factor	Rack (2U), HP Ball Bearing Rail Kit without Cable Management Arm **NOTE:** To assist in the installation of the server into the rack an optional installation tool is available by contacting your local services representative (p/n 695539-001). **Caution:** HP recommends that a minimum of two people are required for all Rack Server installations. Please refer to your installation instructions for proper tools and number of people to use for any installation.
	Warranty	Server Warranty includes 3-Year Parts, 3-Year Labor, 3-Year Onsite support with next business day response.

Energy Star Models

NOTE: These Models are Energy Star Certified.

E5-2600 v2 series Processors

HP ProLiant DL380p Gen8 E5-2630v2 2P 32GB-R P420i/1GB FBWC 460W PS Server 709942-001	**Processor(s)**	(2) Intel® Xeon® E5-2630 v2 (2.6GHz/6-core/15MB/7.2GT-s QPI/80W, DDR3-1600, HT, Turbo2- 3/3/3/3/4/5)
	Cache Memory	15MB (1x15MB) Level 3
	Memory	32GB (2x16GB) PC3L-12800R (DDR3-1600LV) Registered DIMMs **NOTE:** Total 24 DIMM slots available with processor upgrade (2P configuration)
	Network Controller	HP Ethernet 1Gb 4-port 331FLR Adapter
	Storage Controller	HP Smart Array P420i/1GB FBWC (RAID 0/1/1+0/5/5+0/6/6+0)
	Hard Drive	None ship standard
	Internal Storage	Standard: 8 SFF SAS/SATA HDD Bays; includes 6 SFF hard drive blanks

Pre-configured Models

	Optional: +8 SFF (total of 16) SFF SAS/SATA HDD Bays
Optical Drive Bay	Optional: Slim Optical Bay (SATA DVD-RW/ROM Optical Drive)
PCI-Express Slots	6 PCIe slots
Power Supply	(1) HP 460W CS Platinum Plus Hot Plug Power Supply (94% Efficient)
Fans	(6) (N+1 redundancy standard)
Management	HP iLO Management Engine (standard) Optional: HP Insight Control
Energy Star	Meets Energy Star requirements
Form Factor	Rack (2U), HP Ball Bearing Rail Kit without Cable Management Arm **NOTE:** To assist in the installation of the server into the rack an optional installation tool is available by contacting your local services representative (p/n 695539-001). **Caution:** HP recommends that a minimum of two people are required for all Rack Server installations. Please refer to your installation instructions for proper tools and number of people to use for any installation.
Warranty	Server Warranty includes 3-Year Parts, 3-Year Labor, 3-Year Onsite support with next business day response.

Smart Buys

HP ProLiant DL380p Gen8 E5-2609 1P Svr/ S-Buy 670857-S01	**Processor(s)**	Intel® Xeon® E5-2609 (2.40GHz/4-core/10MB/6.4GT-s QPI/80W)
	Cache Memory	10MB (1x10MB) Level 3
	Memory	8GB (1x8GB) PC3L-10600R (DDR3-1333) Registered DIMMS **NOTE:** Total 12 DIMM slots. 24 DIMM slots available with upgrade to 2nd processor
	Network Controller	One HP Ethernet 1Gb 4-port 331FLR Adapter
	Storage Controller	HP Smart Array P420i/ZM (RAID 0/1/1+0)
	Hard Drive	None ship standard
	Internal Storage	Standard: 8 SFF SAS/SATA HDD Bays
	Optical Drive Bay	Optional Slim Optical Bay (SATA DVD-RW /ROM Optical Drive)
	PCI-Express Slots	3 PCIe slots
	Power Supply	2 x HP 460W CS Platinum Plus Hot Plug Redundant Power Supply
	Fans	(4) (N+1 redundancy standard)
	Management	iLO Management Engine Standard
	Form Factor	Rack (2U), HP Ball Bearing Rail Kit /Cable Management Arm standard
	Warranty	Server Warranty includes 3-Year Parts, 3-Year Labor, 3-Year Onsite support with next business day response.
HP ProLiant DL380p Gen8 E5-2620 1P Svr/ S-Buy 670856-S01	**Processor(s)**	Intel® Xeon® E5-2620 (2.0GHz/6-core/15MB/7.2GT-s QPI/95W, DDR3-1333, HT, Turbo2- 3/3/4/4/5/5)
	Cache Memory	15MB (1x15MB) Level 3
	Memory	16GB (2x8GB) PC3L-10600R (DDR3-1333) Registered DIMMS **NOTE:** Total 24 DIMM slots available with upgrade to 2nd processor
	Network Controller	One HP Ethernet 1Gb 4-port 331FLR Adapter
	Storage Controller	HP Smart Array P420i/with 512MB FBWC (RAID 0/1/1+0/5/5+0)
	Hard Drive	None ship standard
	Internal Storage	Standard: 8 SFF SAS/SATA HDD Bays
	Optical Drive Bay	Optional Slim Optical Bay (SATA DVD-RW /ROM Optical Drive)
	PCI-Express Slots	3 PCIe slots
	Power Supply	2 x HP 460W CS Platinum Plus Hot Plug Redundant Power Supply
	Fans	(4) (N+1 redundancy standard)
	Management	iLO Management Engine Standard
	Form Factor	Rack (2U), HP Ball Bearing Rail Kit /Cable Management Arm standard
	Warranty	Server Warranty includes 3-Year Parts, 3-Year Labor, 3-Year Onsite support with next business day response.
HP ProLiant DL380p Gen8 E5-2640 2P Svr/ S-Buy 670854-S01	**Processor(s)**	(2) Intel® Xeon® E5-2640 (2.50GHz/6-core/15MB/7.2GT-s QPI/95W, DDR3-1333, HT, Turbo2- 3/3/4/4/5/5)
	Cache Memory	15MB (1x15MB) Level 3
	Memory	16GB (2x8GB) PC3L-10600R (DDR3-1333) Registered DIMMS **NOTE:** Total 24 DIMM slots
	Network Controller	One HP Ethernet 1Gb 4-port 331FLR Adapter
	Storage Controller	HP Smart Array P420i/1GB with FBWC (RAID 0/1/1+0/5/5+0)
	Hard Drive	None ship standard
	Internal Storage	Standard: 8 SFF SAS/SATA HDD Bays

Smart Buys

	Optical Drive Bay	Optional Slim Optical Bay (SATA DVD-RW /ROM Optical Drive)
	PCI-Express Slots	3 PCIe slots
	Power Supply	2 x HP 460W CS Platinum Plus Hot Plug Redundant Power Supply
	Fans	(6) (N+1 redundancy standard)
	Management	iLO Management Engine Standard
	Form Factor	Rack (2U), HP Ball Bearing Rail Kit /Cable Management Arm standard
	Warranty	Server Warranty includes 3-Year Parts, 3-Year Labor, 3-Year Onsite support with next business day response.
HP ProLiant DL380p Gen8 E5-2660 2P Svr/ S-Buy 670853-S01	**Processor(s)**	(2) Intel® Xeon® E5-2660 (2.20GHz/8-core/20MB/8GT-s QPI/95W, DDR3-1600, HT, Turbo2- 5/5/6/6/7/7/8/8)
	Cache Memory	20MB (1x20MB) Level 3
	Memory	32GB (4x8GB) PC3L-10600R (DDR3-1333) Registered DIMMS **NOTE:** Total 24 DIMM slots
	Network Controller	One HP Ethernet 1Gb 4-port 331FLR Adapter
	Storage Controller	HP Smart Array P420i/1GB with FBWC (RAID 0/1/1+0/5/5+0)
	Hard Drive	None ship standard
	Internal Storage	Standard: 8 SFF SAS/SATA HDD Bays
	Optical Drive Bay	Optional Slim Optical Bay (SATA DVD-RW /ROM Optical Drive)
	PCI-Express Slots	3 PCIe slots
	Power Supply	2 x HP 750W CS Platinum Plus Hot Plug Redundant Power Supply
	Fans	(6) (N+1 redundancy standard)
	Management	iLO Management Engine Standard Also includes HP Insight Control Control including 1yr 24x7 Technical Support and Updates Single Server License
	Form Factor	Rack (2U), HP Ball Bearing Rail Kit /Cable Management Arm standard
	Warranty	Server Warranty includes 3-Year Parts, 3-Year Labor, 3-Year Onsite support with next business day response.
HP ProLiant DL380p Gen8 E5-2670 2P Svr/S -Buy 670852-S01	**Processor(s)**	(2) Intel® Xeon® E5-2670 (2.60GHz/8-core/20MB/8GT-s QPI/115W, DDR3-1600, HT, Turbo2- 4/4/5/5/6/6/7/7)
	Cache Memory	20MB (1x20MB) Level 3
	Memory	32GB (4x8GB) PC3L-10600R (DDR3-1333) Registered DIMMS **NOTE:** Total 24 DIMM slots
	Network Controller	One HP Ethernet 1Gb 4-port 331FLR Adapter
	Storage Controller	HP Smart Array P420i/1GB with FBWC (RAID 0/1/1+0/5/5+0)
	Hard Drive	None ship standard
	Internal Storage	Standard: 8 SFF SAS/SATA HDD Bays
	Optical Drive Bay	Optional Slim Optical Bay (SATA DVD-RW /ROM Optical Drive)
	PCI-Express Slots	3 PCIe slots
	Power Supply	2 x HP 750W CS Platinum Plus Hot Plug Redundant Power Supply
	Fans	(6) (N+1 redundancy standard)
	Management	iLO Management Engine Standard Also includes HP Insight Control Control including 1yr 24x7 Technical Support and Updates Single Server License
	Form Factor	Rack (2U), HP Ball Bearing Rail Kit /Cable Management Arm standard
	Warranty	Server Warranty includes 3-Year Parts, 3-Year Labor, 3-Year Onsite

		support with next business day response.
HP ProLiant DL380p Gen8 E5-2690 2P Svr/ S-Buy 742818-S01	**Processor(s)**	(2) Intel® Xeon® E5-2690 (2.9GHz/8-core/20MB/8GT-s QPI/135W, DDR3-1600, HT, Turbo2- 4/4/4/5/5/7/7/9)
	Cache Memory	20MB (1x20MB) Level 3
	Memory	32GB (4x8GB) PC3L-12800R (DDR3-1600) Registered DIMMS **NOTE:** Total 24 DIMM slots
	Network Controller	One HP Ethernet 1Gb 4-port 331FLR Adapter
	Storage Controller	HP Smart Array P420i/1GB with FBWC (RAID 0/1/1+0/5/5+0)
	Hard Drive	None ship standard
	Internal Storage	Standard: 8 SFF SAS/SATA HDD Bays
	Optical Drive Bay	Optional Slim Optical Bay (SATA DVD-RW /ROM Optical Drive)
	PCI-Express Slots	3 PCIe slots
	Power Supply	2 x HP 750W CS Platinum Plus Hot Plug Redundant Power Supply
	Fans	(6) (N+1 redundancy standard)
	Management	iLO Management Engine Standard
	Form Factor	Rack (2U), HP Ball Bearing Rail Kit /Cable Management Arm standard
	Warranty	Server Warranty includes 3-Year Parts, 3-Year Labor, 3-Year Onsite support with next business day response.
HP ProLiant DL380p Gen8 E5-2620 1P LFF Svr/S-Buy 697494-S01	**Processor(s)**	Intel® Xeon® E5-2620 (2.0GHz/6-core/15MB/7.2GT-s QPI/95W, DDR3-1333, HT, Turbo2- 3/3/4/4/5/5)
	Cache Memory	15MB (1x15MB) Level 3
	Memory	16GB (2x8GB) PC3L-10600R (DDR3-1333) Registered DIMMS **NOTE:** Total 24 DIMM slots available with upgrade to 2nd processor
	Network Controller	One HP Ethernet 1Gb 4-port 331FLR Adapter
	Storage Controller	HP Smart Array P420i/512MB FBWC (RAID 0/1/1+0/5/5+0)
	Hard Drive	None ship standard
	Internal Storage	Standard: 8 LFF SAS/SATA HDD Bays
	Optical Drive Bay	Optional Slim Optical Bay (SATA DVD-RW /ROM Optical Drive)
	PCI-Express Slots	3 PCIe slots
	Power Supply	2 x HP 460W CS Platinum Plus Hot Plug Redundant Power Supply
	Fans	(4) (N+1 redundancy standard)
	Management	iLO Management Engine Standard
	Form Factor	Rack (2U), HP Ball Bearing Rail Kit /Cable Management Arm standard
	Warranty	Server Warranty includes 3-Year Parts, 3-Year Labor, 3-Year Onsite support with next business day response.
HP ProLiant DL380p Gen8 E5-2640 1P 25SFF Svr/S-Buy 706539-S01	**Processor(s)**	Intel® Xeon® E5-2640 (2.50GHz/6-core/15MB/7.2GT-s QPI/95W, DDR3-1333, HT, Turbo2- 3/3/4/4/5/5)
	Cache Memory	15MB (1x15MB) Level 3
	Memory	16GB (2x8GB) PC3L-10600R (DDR3-1333) Registered DIMMS **NOTE:** Total 24 DIMM slots available with upgrade to 2nd processor
	Network Controller	One HP Ethernet 1Gb 4-port 331FLR Adapter
	Storage Controller	HP Smart Array P420i/1GB with FBWC (RAID 0/1/1+0/5/5+0)
	Hard Drive	None ship standard
	Internal Storage	Standard: 25 SFF SAS/SATA HDD Bays

Smart Buys

	Optical Drive Bay	Not available
	PCI-Express Slots	3 PCIe slots
	Power Supply	2 x HP 750W CS Platinum Plus Hot Plug Redundant Power Supply
	Fans	(4) (N+1 redundancy standard)
	Management	iLO Management Engine Standard
	Form Factor	Rack (2U), HP Ball Bearing Rail Kit /Cable Management Arm standard
	Warranty	Server Warranty includes 3-Year Parts, 3-Year Labor, 3-Year Onsite support with next business day response.
HP ProLiant DL380p Gen8 E5-2609 v2 1P SFF Svr/S-Buy 734789-S01	**Processor(s)**	(1) Intel® Xeon® E5-2609 v2 (2.5GHz/4-core/10MB/6.4GT-s QPI/80W)
	Cache Memory	10MB (1x10MB) Level 3
	Memory	8GB (1x8GB) PC3L-12800R (DDR3-1600) Registered DIMMS **NOTE:** Total 12 DIMM slots. 24 DIMM slots available with upgrade to 2nd processor
	Network Controller	One HP Ethernet 1Gb 4-port 331FLR Adapter
	Storage Controller	HP Smart Array P420i/ZM (RAID 0/1/1+0)
	Hard Drive	None ship standard
	Internal Storage	Standard: 8 SFF SAS/SATA HDD Bays
	Optical Drive Bay	Optional Slim Optical Bay (SATA DVD-RW /ROM Optical Drive)
	PCI-Express Slots	3 PCIe slots
	Power Supply	HP 460W CS Platinum Plus Hot Plug Power Supply
	Fans	(4) (N+1 redundancy standard)
	Management	iLO Management Engine Standard
	Form Factor	Rack (2U), HP Ball Bearing Rail Kit (does not include cable mgmt arm)
	Warranty	Server Warranty includes 3-Year Parts, 3-Year Labor, 3-Year Onsite support with next business day response.
HP ProLiant DL380p Gen8 E5-2620 v2 1P SFF Svr/S-Buy 734790-S01	**Processor(s)**	(1) Intel® Xeon® E5-2620 v2 (2.1GHz/6-core/15MB/7.2GT-s QPI/80W, DDR3- 1600, HT, Turbo2- 3/3/3/3/4/5)
	Cache Memory	15MB (1x15MB) Level 3
	Memory	16GB (1x16GB) PC3L-12800R (DDR3-1600) Registered DIMMS **NOTE:** Total 12 DIMM slots. 24 DIMM slots available with upgrade to 2nd processor
	Network Controller	One HP Ethernet 1Gb 4-port 331FLR Adapter
	Storage Controller	HP Smart Array P420i/512MB FBWC (RAID 0/1/1+0/5/5+0)
	Hard Drive	None ship standard
	Internal Storage	Standard: 8 SFF SAS/SATA HDD Bays
	Optical Drive Bay	Optional Slim Optical Bay (SATA DVD-RW /ROM Optical Drive)
	PCI-Express Slots	3 PCIe slots
	Power Supply	HP 460W CS Platinum Plus Hot Plug Power Supply
	Fans	(4) (N+1 redundancy standard)
	Management	iLO Management Engine Standard
	Form Factor	Rack (2U), HP Ball Bearing Rail Kit (does not include cable mgmt arm)
	Warranty	Server Warranty includes 3-Year Parts, 3-Year Labor, 3-Year Onsite support with next business day response.

Smart Buys

HP ProLiant DL380p Gen8 E5-2640 v2 2P SFF Svr/S-Buy 734791-S01	**Processor(s)**	(2) Intel® Xeon® E5-2640 v2 (2.0GHz/8-core/20MB/7.2GT-s QPI/95W, DDR3-1600, HT, Turbo2- 3/3/3/3/3/3/4/5)
	Cache Memory	20MB (1x20MB) Level 3
	Memory	32GB (2x16GB) PC3L-12800R (DDR3-1600) Registered DIMMS **NOTE:** Total 12 DIMM slots. 24 DIMM slots available with upgrade to 2nd processor
	Network Controller	One HP Ethernet 1Gb 4-port 331FLR Adapter
	Storage Controller	HP Smart Array P420i/1GB FBWC (RAID 0/1/1+0/5/5+0)
	Hard Drive	None ship standard
	Internal Storage	Standard: 8 SFF SAS/SATA HDD Bays
	Optical Drive Bay	Optional Slim Optical Bay (SATA DVD-RW /ROM Optical Drive)
	PCI-Express Slots	6 PCIe slots
	Power Supply	2 x HP 460W CS Platinum Plus Hot Plug Redundant Power Supplies
	Fans	(6) (N+1 redundancy standard)
	Management	iLO Management Engine Standard
	Form Factor	Rack (2U), HP Ball Bearing Rail Kit (does not include cable mgmt arm)
	Warranty	Server Warranty includes 3-Year Parts, 3-Year Labor, 3-Year Onsite support with next business day response.
HP ProLiant DL380p Gen8 E5-2660 v2 1P SFF Svr/S-Buy 734792-S01	**Processor(s)**	Intel® Xeon® E5-2660 v2 (2.2GHz/10-core/25MB/8.0GT-s QPI/95W, DDR3-1866, HT, Turbo2- 4/4/4/4/4/4/5/6/7/8)
	Cache Memory	25MB (1x25MB) Level 3
	Memory	16GB (1x16GB) PC3L-14900R (DDR3-1866) Registered DIMMS **NOTE:** Total 12 DIMM slots. 24 DIMM slots available with upgrade to 2nd processor
	Network Controller	One HP Ethernet 1Gb 4-port 331FLR Adapter
	Storage Controller	HP Smart Array P420i/1GB FBWC (RAID 0/1/1+0/5/5+0)
	Hard Drive	None ship standard
	Internal Storage	Standard: 8 SFF SAS/SATA HDD Bays
	Optical Drive Bay	Optional Slim Optical Bay (SATA DVD-RW /ROM Optical Drive)
	PCI-Express Slots	3 PCIe slots
	Power Supply	HP 460W CS Platinum Plus Hot Plug Power Supply
	Fans	(4) (N+1 redundancy standard)
	Management	iLO Management Engine Standard
	Form Factor	Rack (2U), HP Ball Bearing Rail Kit (does not include cable mgmt arm)
	Warranty	Server Warranty includes 3-Year Parts, 3-Year Labor, 3-Year Onsite support with next business day response.
HP ProLiant DL380p Gen8 E5-2670v2 2P SFF Svr/S-Buy 734793-S01	**Processor(s)**	(2) Intel® Xeon® E5-2670 v2 (2.5GHz/10-core/25MB/8.0GT-s QPI/115W, DDR3-1866, HT, Turbo2- 4/4/4/4/4/4/5/6/7/8)
	Cache Memory	25MB (1x25MB) Level 3
	Memory	32GB (2x16GB) PC3L-14900R (DDR3-1866) Registered DIMMS **NOTE:** Total 12 DIMM slots. 24 DIMM slots available with upgrade to 2nd processor
	Network Controller	HP FlexFabric 10Gb 2-port 533FLR-T Adapter
	Storage Controller	HP Smart Array P420i/1GB FBWC (RAID 0/1/1+0/5/5+0)
	Hard Drive	None ship standard

Smart Buys

	Internal Storage	Standard: 8 SFF SAS/SATA HDD Bays
	Optical Drive Bay	Optional Slim Optical Bay (SATA DVD-RW /ROM Optical Drive)
	PCI-Express Slots	6 PCIe slots
	Power Supply	2x HP 750W CS Platinum Plus Hot Plug Redundant Power Supplies
	Fans	(6) (N+1 redundancy standard)
	Management	iLO Management Engine Standard
	Form Factor	Rack (2U), HP Ball Bearing Rail Kit (does not include cable mgmt arm)
	Warranty	Server Warranty includes 3-Year Parts, 3-Year Labor, 3-Year Onsite support with next business day response.
HP ProLiant DL380p Gen8 E5-2690 v2 2P SFF Svr/S-Buy 748303-S01	**Processor(s)**	(2) Intel® Xeon® E5-2690 v2 (3.0GHz/10-core/25MB/8.0GT-s QPI/130W, DDR3-1866, HT, Turbo2- 3/3/3/3/3/3/3/4/5/6)
	Cache Memory	25MB (1x25MB) Level 3
	Memory	32GB (2x16GB) PC3-14900R (DDR3-1866) Registered DIMMS
	Network Controller	One HP Ethernet 1Gb 4-port 331FLR Adapter
	Storage Controller	HP Smart Array P420i/1GB with FBWC (RAID 0/1/1+0/5/5+0)
	Hard Drive	None ship standard
	Internal Storage	Standard: 8 SFF SAS/SATA HDD Bays
	Optical Drive Bay	Optional Slim Optical Bay (SATA DVD-RW /ROM Optical Drive)
	PCI-Express Slots	3 PCIe slots
	Power Supply	(2) HP 750W CS Platinum Plus Hot Plug Redundant Power Supplies
	Fans	(6) (N+1 redundancy standard)
	Management	iLO Management Engine Standard
	Form Factor	Rack (2U), HP Ball Bearing Rail Kit (does not include cable mgmt arm)
	Warranty	Server Warranty includes 3-Year Parts, 3-Year Labor, 3-Year Onsite support with next business day response.
HP ProLiant DL380p Gen8 E5-2697 v2 2P SFF Svr/S-Buy 748304-S01	**Processor(s)**	(2) Intel® Xeon® E5-2697 v2 (2.7GHz/12-core/30MB/8.0GT-s QPI/130W, DDR3-1866, HT, Turbo2- 3/3/3/3/3/3/3/4/5/6/7/8)
	Cache Memory	30MB (1x30MB) Level 3
	Memory	32GB (2x16GB) PC3-14900R (DDR3-1866) Registered DIMMS
	Network Controller	One HP Ethernet 1Gb 4-port 331FLR Adapter
	Storage Controller	HP Smart Array P420i/1GB with FBWC (RAID 0/1/1+0/5/5+0)
	Hard Drive	None ship standard
	Internal Storage	Standard: 8 SFF SAS/SATA HDD Bays
	Optical Drive Bay	Optional Slim Optical Bay (SATA DVD-RW /ROM Optical Drive)
	PCI-Express Slots	3 PCIe slots
	Power Supply	(2) HP 750W CS Platinum Plus Hot Plug Redundant Power Supplies
	Fans	(6) (N+1 redundancy standard)
	Management	iLO Management Engine Standard
	Form Factor	Rack (2U), HP Ball Bearing Rail Kit (does not include cable mgmt arm)
	Warranty	Server Warranty includes 3-Year Parts, 3-Year Labor, 3-Year Onsite support with next business day response.
HP ProLiant DL380p Gen8 E5-2640 v2 1P 25-	**Processor(s)**	(1) Intel® Xeon® E5-2640 v2 (2.0GHz/8-core/20MB/7.2GT-s QPI/95W, DDR3-1600, HT, Turbo2- 3/3/3/3/3/3/4/5)

Smart Buys

SFF Svr/S-Buy 734794-S01	**Cache Memory**	20MB (1x20MB) Level 3
	Memory	32GB (2x16GB) PC3L-12800R (DDR3-1600) Registered DIMMS **NOTE:** Total 12 DIMM slots. 24 DIMM slots available with upgrade to 2nd processor
	Network Controller	One HP Ethernet 1Gb 4-port 331FLR Adapter
	Storage Controller	HP Smart Array P420i/2GB FBWC (RAID 0/1/1+0/5/5+0)
	Hard Drive	None ship standard
	Internal Storage	Standard: 25 SFF SAS/SATA HDD Bays
	Optical Drive Bay	Not available
	PCI-Express Slots	3 PCIe slots
	Power Supply	2x HP 750W CS Platinum Plus Hot Plug Redundant Power Supplies
	Fans	(4) (N+1 redundancy standard)
	Management	iLO Management Engine Standard
	Form Factor	Rack (2U), HP Ball Bearing Rail Kit (does not include cable mgmt arm)
	Warranty	Server Warranty includes 3-Year Parts, 3-Year Labor, 3-Year Onsite support with next business day response.
HP ProLiant DL380p Gen8 E5-2650v2 2P 25 SFF Svr/S-Buy 785098-S01	**Processor(s)**	(2) Intel® Xeon® E5-2650 v2 (2.6GHz/8-core/20MB/8.0GT-s QPI/95W, DDR3-1866, HT, Turbo2- 4/4/4/4/5/6/7/8)
	Cache Memory	20MB (1x20MB) Level 3
	Memory	32GB (4x8GB) PC3-14900R (DDR3-1866) Registered DIMMS
	Network Controller	HP FlexFabric 1Gb 4-port 331FLR Adapter
	Storage Controller	HP Smart Array P420i/2GB FBWC (RAID 0/1/1+0/5/5+0)
	Hard Drive	Includes (2) HP 300GB/10K SFF SAS Drives (boot) and (4) HP 600GB/10K SFF SAS Drives (data)
	Internal Storage	Up to 25 SFF
	Optical Drive Bay	Not available
	PCI-Express Slots	3 PCIe slots
	Power Supply	2x HP 750W CS Platinum Plus Hot Plug Redundant Power Supplies
	Fans	(6) (N+1 redundancy standard)
	Management	iLO Management Engine Standard Includes Insight Control License
	Form Factor	Rack (2U), HP Easy Install Rail Kit
	Warranty	Server Warranty includes 3-Year Parts, 3-Year Labor, 3-Year Onsite support with next business day response
HP ProLiant DL380p Gen8 E5-2620 v2 1P 12-LFF Svr/S-Buy 742132-S01	**Processor(s)**	(1) Intel® Xeon® E5-2620 v2 (2.1GHz/6-core/15MB/7.2GT-s QPI/80W, DDR3-1600, HT, Turbo2- 3/3/3/3/4/5)
	Cache Memory	15MB (1x15MB) Level 3
	Memory	16GB (1x16GB) PC3L-12800R (DDR3-1600) Registered DIMMS **NOTE:** Total 12 DIMM slots. 24 DIMM slots available with upgrade to 2nd processor
	Network Controller	One HP Ethernet 1Gb 4-port 331FLR Adapter
	Storage Controller	HP Smart Array P420i/2GB FBWC (RAID 0/1/1+0/5/5+0)
	Hard Drive	None ship standard
	Internal Storage	Standard: 12 LFF SAS/SATA HDD Bays
	Optical Drive Bay	Not available

Smart Buys

PCI-Express Slots	3 PCIe slots
Power Supply	2 x HP 750W CS Platinum Plus Hot Plug Redundant Power Supplies
Fans	(4) (N+1 redundancy standard)
Management	iLO Management Engine Standard
Form Factor	Rack (2U), HP Ball Bearing Rail Kit (does not include cable mgmt arm)
Warranty	Server Warranty includes 3-Year Parts, 3-Year Labor, 3-Year Onsite support with next business day response.

Configuration Information - Factory Integrated Models

NOTE: This section lists some of the steps required to configure a Factory Integrated Model. To ensure only valid configurations are ordered, HP recommends the use of an HP approved configurator. Contact your local sales representative for information on configurable product offerings and requirements.
NOTE: Factory Integrated Models must start with a CTO Server.
NOTE: FIO indicates that this option is only available as a factory installable option.
NOTE: All Factory Integrated Models will be populated with sufficient hard drive blanks based on the number of initial hard drives ordered with the server.

Step 1: Base Configuration (choose one of the following configurable models)

HP Models

HP ProLiant DL380p Gen8 8 LFF Configure-to-order Server 665553-B21

Factory Integrated Model ships with:

2 x HP Smart Socket Guides for fast processor installation.
24 DIMM slots for RDIMM, LRDIMM and UDIMM Memory installation
1 FlexibleLOM connector: (see Step2: HP FlexibleNIC section below for NIC choices to populate the embedded connector)
Smart Array P420i Controller w/ Zero Memory (ZM)
I/O slots - 3 Slots come standard:

- Slot 1 - FL/FH x16 PCIe 3.0 (x16 connector)
- Slot 2 - HL/FH x8 PCIe 3.0 (x8 connector)
- Slot 3 - HL/FH x4 PCIe 2.0 (x8 connector)
- Additional Slots may be added via selections from the PCI Information and Options subsection

System Fans - 4 (2 additional fans included with second processor)
Drive Cage - 8LFF (Optical media drive optional)
USB - 4 Rear, 2 Front, 1 Internal, 1 SD slot
HP iLO Management Engine (standard)
NOTE: Power Supply & Rail Kit not included - choose from Step 2 & 3 sections below
NOTE: If a P430 controller is required, it cannot be populated in slots 3 or 4.

HP ProLiant DL380p Gen8 8 SFF Configure-to-order Server 653200-B21

Factory Integrated Model ships with:

1 FlexibleLOM connector: (see Step 2: HP FlexibleLOM section below for NIC choices to populate the embedded connector)
Smart Array P420i Controller w/ Zero Memory (ZM)
I/O slots - 3 Slots come standard:

- Slot 1 - FL/FH x16 PCIe 3.0 (x16 connector)
- Slot 2 - HL/FH x8 PCIe 3.0 (x8 connector)
- Slot 3 - HL/FH x4 PCIe 2.0 (x8 connector)
- Additional Slots may be added via selections from the PCI Information and Options subsection

System Fans - 4 (2 additional fans included with second processor)
Drive Cage - 8SFF (Optical media drive OR Second 8SFF drive cage optional)
USB - 4 Rear, 2 Front, 1 Internal, 1 SD slot
HP iLO Management Engine (standard)
NOTE: Power Supply & Rail Kit not included - choose from Step 2 & 3 sections below
NOTE: If a P430 controller is required, it cannot be populated in slots 3 or 4.

HP ProLiant DL380p Gen8 12 LFF Configure-to-order Server 665552-B21

Factory Integrated Model ships with:

Configuration Information - Factory Integrated Models

1 FlexibleLOM connector: (see Step 2: HP FlexibleLOM section below for NIC choices to populate the embedded connector)
Smart Array P420i Controller w/ Zero Memory (ZM)
I/O slots - 3 Slots come standard:

- Slot 1 - FL/FH x16 PCIe 3.0 (x16 connector)
- Slot 2 - HL/FH x8 PCIe 3.0 (x8 connector)
- Slot 3 - HL/FH x4 PCIe 2.0 (x8 connector)
- Additional Slots may be added via selections from the PCI Information and Options subsection

System Fans - 4 (2 additional fans included with second processor)
Drive Cage - 12LFF (with built-in expander)
USB - 4 Rear, 1 Front, 1 Internal, 1 SD slot
HP iLO Management Engine (standard)
NOTE: Power Supply & Rail Kit not included - choose from Step 3 & 4 sections below
NOTE: Customers can only choose from 115W or lower E5-2600 and E5-2600 v2 processors in this configure-to-order model.
NOTE: Processors consuming 115W power or greater require the use of DIMM blanks and do not support LR or HC-DIMMs
NOTE: This chassis comes with a built-in expander. All drives can be driven off of the embedded P420i controller.
NOTE: Customers must add a minimum of a 512MB controller cache module when choosing this CTO server.
NOTE: If a P822 controller is required, it cannot be populated in slot 3.
NOTE: If a P421 controller is required, it cannot be populated in slot 1.
NOTE: If a P430 controller is required, it cannot be populated in slots 3 or 4.
NOTE: GPU options are not supported in this CTO server.
NOTE: Customer will not be able to get an optical drive, SID, second front USB, and ID label.

HP ProLiant DL380p Gen8 25 SFF Configure-to-order Server 665554-B21

Factory Integrated Model ships with:

1 FlexibleLOM connector: (see Step 2: HP FlexibleLOM section below for NIC choices to populate the embedded connector)
Smart Array P420i Controller w/ Zero Memory (ZM)
I/O slots - 3 Slots come standard:

- Slot 1 - FL/FH x16 PCIe 3.0 (x16 connector)
- Slot 2 - HL/FH x8 PCIe 3.0 (x8 connector)
- Slot 3 - HL/FH x4 PCIe 2.0 (x8 connector)
- Additional Slots may be added via selections from the PCI Information and Options subsection

System Fans - 4 (2 additional fans included with second processor)
Drive Cage - 25SFF (with built-in expander)
USB - 4 Rear, 1 Front, 1 Internal, 1 SD slot
HP iLO Management Engine (standard)
NOTE: Power Supply & Rail Kit not included - choose from Step 3 & 4 sections below
NOTE: Customers cannot select the 130W or greater processors in this configure-to-order model.
NOTE: Processors consuming 115W power require the use of DIMM blanks and do not support LR-DIMMs
NOTE: This chassis comes with a built-in expander. All drives can be driven off of the embedded P420i controller.

NOTE: Customers must add a minimum of a 512MB controller cache module when choosing this CTO server.
NOTE: If a P822 controller is required, it cannot be populated in slot 3.
NOTE: If a P430 controller is required, it cannot be populated in slots 3 or 4.
NOTE: GPU options are not supported in this CTO server.
NOTE: Customer will not be able to get an optical drive, SID, second front USB, and ID label.

Step 2: Choose Required Options (only one of the following from each list unless otherwise noted)

HP Processors

NOTE: If two processors are desired, select one xxxxxx-L21 and one xxxxxx-B21
NOTE: The first processor selected should be the xxxxxx-L21 part

FIO Entry Processors - E5-2600 v2 series Processors
NOTE: All support up to 1333MHz memory speeds.

NOTE: Is a FIO (Factory integrated option) only

HP DL380p Gen8 Intel® Xeon® E5-2609v2 (2.5GHz/4-core/10MB/80W) FIO Processor Kit	715222-L21
HP DL380p Gen8 Intel® Xeon® E5-2603v2 (1.8GHz/4-core/10MB/80W) FIO Processor Kit	715223-L21

FIO Base Processors - E5-2600 v2 series Processors
NOTE: All support up to1600MHz DDR3 memory speeds.

NOTE: Is a FIO (Factory integrated option) only

HP DL380p Gen8 Intel® Xeon® E5-2640v2 (2.0GHz/8-core/20MB/95W) FIO Processor Kit	715219-L21
HP DL380p Gen8 Intel® Xeon® E5-2630v2 (2.6GHz/6-core/15MB/80W) FIO Processor Kit	715220-L21
HP DL380p Gen8 Intel® Xeon® E5-2620v2 (2.1GHz/6-core/15MB/80W) FIO Processor Kit	715221-L21
HP DL380p Gen8 Intel® Xeon® E5-2650Lv2 (1.7GHz/10-core/25MB/70W) FIO Processor Kit	715229-L21
HP DL380p Gen8 Intel® Xeon® E5-2630Lv2 (2.4GHz/6-core/15MB/60W) FIO Processor Kit	715230-L21

FIO Performance Processors - E5-2600 v2 series Processors
NOTE: All support up to 1866MHz DDR3 memory speeds

NOTE: Is a FIO (Factory integrated option) only

HP DL380p Gen8 Intel® Xeon® E5-2697v2 (2.7GHz/12-core/30MB/130W) FIO Processor Kit	715224-L21
HP DL380p Gen8 Intel® Xeon® E5-2695v2 (2.4GHz/12-core/30MB/115W) FIO Processor Kit	715225-L21
HP DL380p Gen8 Intel® Xeon® E5-2690v2 (3.0GHz/10-core/25MB/130W) FIO Processor Kit	715214-L21
HP DL380p Gen8 Intel® Xeon® E5-2680v2 (2.8GHz/10-core/25MB/115W) FIO Processor Kit	715215-L21
HP DL380p Gen8 Intel® Xeon® E5-2670v2 (2.5GHz/10-core/25MB/115W) FIO Processor Kit	715216-L21
HP DL380p Gen8 Intel® Xeon® E5-2667v2 (3.3GHz/8-core/25MB/130W) FIO Processor Kit	715226-L21
HP DL380p Gen8 Intel® Xeon® E5-2660v2 (2.2GHz/10-core/25MB/95W) FIO Processor Kit	715217-L21

Configuration Information - Factory Integrated Models

	HP DL380p Gen8 Intel® Xeon® E5-2650v2 (2.6GHz/8-core/20MB/95W) FIO Processor Kit	715218-L21
	HP DL380p Gen8 Intel® Xeon® E5-2643v2 (3.5GHz/6-core/25MB/130W) FIO Processor Kit	715227-L21
	HP DL380p Gen8 Intel® Xeon® E5-2637v2 (3.5GHz/4-core/15MB/130W) FIO Processor Kit	715228-L21
HP Memory	**NOTE:** HP memory from previous generation servers are not qualified or warranted with this HP ProLiant Server. HP SmartMemory is required to realize the memory performance improvements and enhanced functionality listed in this document for Gen8. For additional information, please see the HP SmartMemory QuickSpecs at: http://h18000.www1.hp.com/products/quickspecs/14225_na/14225_na.html **NOTE:** LRDIMM, RDIMM, and UDIMM, are all distinct memory technologies and cannot be mixed within a server. The majority of ProLiant Gen8 servers support LRDIMM, RDIMM and UDIMMs.	
	Registered DIMMs (RDIMMs) **NOTE:** The following memory is supported by the E5-2600 v2 series Processors.	
	HP 4GB (1x4GB) Single Rank x4 PC3L-12800R (DDR3-1600) Registered CAS-11 Low Voltage Memory Kit	713981-B21
	HP 4GB (1x4GB) Single Rank x4 PC3-14900R (DDR3-1866) Registered CAS-13 Memory Kit	708637-B21
	HP 8GB (1x8GB) Dual Rank x4 PC3L-12800R (DDR3-1600) Registered CAS-11 Low Voltage Memory Kit	713983-B21
	HP 8GB (1x8GB) Single Rank x4 PC3L-12800R (DDR3-1600) Registered CAS-11 Low Voltage Memory Kit	731765-B21
	HP 8GB (1x8GB) Dual Rank x4 PC3-14900R (DDR3-1866) Registered CAS-13 Memory Kit	708639-B21
	HP 8GB (1x8GB) Single Rank x4 PC3-14900R (DDR3-1866) Registered CAS-13 Memory Kit	731761-B21
	HP 16GB (1x16GB) Dual Rank x4 PC3L-12800R (DDR3-1600) Registered CAS-11 Low Voltage Memory Kit	713985-B21
	HP 16GB (1x16GB) Dual Rank x4 PC3-14900R (DDR3-1866) Registered CAS-13 Memory Kit	708641-B21
	Registered DIMMs (RDIMMs) **NOTE:** The following memory is supported by the E5-2600 series Processors.	
	HP 4GB (1x4GB) Single Rank x4 PC3L-10600R (DDR3-1333) Registered CAS-9 Low Voltage Memory Kit	647893-B21
	HP 4GB (1x4GB) Single Rank x4 PC3-12800R (DDR3-1600) Registered CAS-11 Memory Kit	647895-B21
	HP 8GB (1x8GB) Dual Rank x4 PC3L-10600R (DDR3-1333) Registered CAS-9 Low Voltage Memory Kit	647897-B21
	HP 8GB (1x8GB) Single Rank x4 PC3-12800R (DDR3-1600) Registered CAS-11 Memory Kit	647899-B21
	HP 8GB (1x8GB) Dual Rank x4 PC3-12800R (DDR3-1600) Registered CAS-11 Memory Kit	690802-B21
	HP 16GB (1x16GB) Dual Rank x4 PC3L-10600R (DDR3-1333) Registered CAS-9 Low Voltage Memory Kit	647901-B21
	HP 16GB (1x16GB) Dual Rank x4 PC3-12800R (DDR3-1600) Registered CAS-11 Memory Kit	672631-B21
	Unbuffered with ECC DIMMs (UDIMMs) **NOTE:** The following memory is supported by the E5-2600 v2 series Processors.	

Configuration Information - Factory Integrated Models

	HP 2GB (1x2GB) Single Rank x8 PC3L-12800E (DDR3-1600) Unbuffered CAS-11 Low Voltage Memory Kit	713975-B21
	HP 2GB (1x2GB) Single Rank x8 PC3-14900E (DDR3-1866) Unbuffered CAS-13 Memory Kit	708631-B21
	HP 4GB (1x4GB) Dual Rank x8 PC3L-12800E (DDR3-1600) Unbuffered CAS-11 Low Voltage Memory Kit	713977-B21
	HP 4GB (1x4GB) Dual Rank x8 PC3-14900E (DDR3-1866) Unbuffered CAS-13 Memory Kit	708633-B21
	HP 8GB (1x8GB) Dual Rank x8 PC3L-12800E (DDR3-1600) Unbuffered CAS-11 Low Voltage Memory Kit	713979-B21
	HP 8GB (1x8GB) Dual Rank x8 PC3-14900E (DDR3-1866) Unbuffered CAS-13 Memory Kit	708635-B21
	Unbuffered with ECC DIMMs (UDIMMs) **NOTE:** The following memory is supported by the E5-2600 series Processors.	
	HP 2GB (1x2GB) Single Rank x8 PC3-12800E (DDR3-1600) Unbuffered CAS-11 Memory Kit	669320-B21
	HP 2GB (1x2GB) Single Rank x8 PC3L-10600E (DDR3-1333) Unbuffered CAS-9 Low Voltage Memory Kit	647905-B21
	HP 4GB (1x4GB) Dual Rank x8 PC3-12800E (DDR3-1600) Unbuffered CAS-11 Memory Kit	669322-B21
	HP 4GB (1x4GB) Dual Rank x8 PC3L-10600E (DDR3-1333) Unbuffered CAS-9 Low Voltage Memory Kit	647907-B21
	HP 8GB (1x8GB) Dual Rank x8 PC3-12800E (DDR3-1600) Unbuffered CAS-11 Memory Kit	669324-B21
	HP 8GB (1x8GB) Dual Rank x8 PC3L-10600E (DDR3-1333) Unbuffered CAS-9 Low Voltage Memory Kit	647909-B21
	Load Reduced DIMMs (LRDIMMs) **NOTE:** The following memory is supported by the E5-2600 v2 series Processors. However it is not supported on the DL380p Gen8 25-SFF CTO Server (PN/ 665554-B21) with any Processor above 95W.	
	HP 32GB (1x32GB) Quad Rank x4 PC3-14900L (DDR3-1866) Load Reduced CAS-13 Memory Kit	708643-B21
	Load Reduced DIMMs (LRDIMMs) **NOTE:** The following memory is supported by the E5-2600 series Processors. However it is not supported on the DL380p Gen8 25-SFF CTO Server (PN/ 665554-B21) with any Processor above 95W.	
	HP 32GB (1x32GB) Quad Rank x4 PC3L-10600L (DDR3-1333) Load Reduced CAS-9 Low Voltage Memory Kit	647903-B21
	NOTE: All DDR3 memory option kits consist of one DIMM per kit. For detailed memory configuration rules and guidelines, please use the Online DDR3 Memory Configuration Tool: http://www.hp.com/go/ddr3memory-configurator. **NOTE:** Kits described as LP include Low Power DIMMs. For more information on ProLiant Energy Efficient Features, see: http://www.hp.com/go/proliant-energy-efficient **NOTE:** PC3L is a low voltage memory	
HP Networking	**FlexibleLOM Adapters** **NOTE:** The FlexibleLOM Adapters in this section are Factory Integrated Options (FIO) only. **NOTE:** Only one FlexibleLOM can be added to the server. These options are upgradeable and can be changed from the original configuration after the server is shipped.	

Configuration Information - Factory Integrated Models

	NOTE: For 10Gb adapters, a minimum of two Gigabytes (2 GB) of server memory is required per each adapter.	
	HP Ethernet 1Gb 4-port 331FLR FIO Adapter	684208-B21
	HP FlexFabric 10Gb 2-port 526FLR-SFP+ FIO Adapter	684219-B21
	HP Ethernet 10Gb 2-port 530FLR-SFP+ FIO Adapter	684210-B21
	HP FlexFabric 10Gb 2-port 533FLR-T FIO Adapter	700760-B21
	HP FlexFabric 10Gb 2-port 534FLR-SFP+ FIO Adapter	700752-B21
	HP FlexFabric 10Gb 2-port 554FLR-SFP+ FIO Adapter	684213-B21
	HP FlexFabric 10Gb 2-port 556FLR-SFP+ FIO Adapter	732456-B21
	HP Ethernet 1Gb 4-port 366FLR FIO Adapter	684217-B21
	HP Ethernet 10Gb 2-port 560FLR-SFP+ FIO Adapter	684218-B21
	HP Ethernet 10Gb 2-port 561FLR-T FIO Adapter	700700-B21
	HP Ethernet 10Gb 2-port 570FLR-SFP+ FIO Adapter	717492-B21
	HP Ethernet 10Gb 2-port 571FLR-SFP+ FIO Adapter	728993-B21
	NOTE: Direct Attach Cable (DAC) for copper environments or fiber transceivers and cables for fiber-optic environments must be purchased separately. Please see the related NIC QuickSpecs for Technical Specifications and additional information: http://www.hp.com/go/ProLiantNICs.	
HP InfiniBand	HP Infiniband FDR/Ethernet 10Gb/40Gb 2-port 544FLR-QSFP Adapter	649282-B21
	HP Infiniband QDR/Ethernet 10Gb 2-port 544FLR-QSFP Adapter	649283-B21
	NOTE: 10Gb Ethernet requires the use of the QSFP to SFP+ adapter P/N 655874-B21. **NOTE:** Please see the QuickSpecs for additional information: http://h18000.www1.hp.com/products/quickspecs/13078_na/13078_na.html	
HP Power Supplies	**NOTE:** Mixing of power supplies in the same server is not supported. All power supplies must be of the same output and efficiency rating. If non-matched power supplies are inserted, you will get errors, and operation will fail. **NOTE:** Prior to making a power supply selection it is highly recommended that the HP Power Advisor is run to determine the right size power supply for your server configuration. The HP Power Advisor is located at: http://www.hp.com/go/hppoweradvisor.	
	HP Common Slot Platinum Plus Power Supply Kits **NOTE:** The following Power Supplies offer 94% efficiency to save on energy costs. Common Slot Platinum Plus Power Supplies support Power Discovery Services when used with the HP Intelligent PDUs.	
	HP 460W Common Slot Platinum Plus Hot Plug Power Supply Kit	656362-B21
	HP 750W Common Slot Platinum Plus Hot Plug Power Supply Kit	656363-B21
	HP 1200W Common Slot Platinum Plus Hot Plug Power Supply Kit	656364-B21
	HP Common Slot Platinum Power Supply Kits **NOTE:** The following Power Supplies offer 94% efficiency to save on energy costs. HP Common Slot Platinum Power Supplies do not support Power Discovery Services and ship with a standard AC power connector.	
	HP 460W Common Slot Platinum Hot Plug Power Supply Kit	739252-B21
	HP 750W Common Slot Platinum Hot Plug Power Supply Kit	739254-B21
	HP 1200W Common Slot Platinum Hot Plug Power Supply Kit	748287-B21
	HP Common Slot Gold Power Supplies **NOTE:** The following Power Supplies offer 92% Efficiency.	
	HP 460W CS Gold Ht Plg Power Supply Kit	503296-B21
	HP 750W Common Slot Gold Hot Plug Power Supply Kit	512327-B21
	HP Common Slot -48VDC Power Supplies	

Configuration Information - Factory Integrated Models

	HP 750W Common Slot -48VDC Hot Plug Power Supply Kit **NOTE:** The HP 750W Common Slot -48VDC power supply does not ship with a power cable. It has been designed with a terminal block connection allowing for custom design of power cords by the user to select an alternative power cord for your server, please review the HP Common Slot Power Supplies QuickSpecs.	636673-B21
	HP Common Slot 380VDC Power Supplies	
	HP 1200W Common Slot 380VDC Hot Plug Power Supply Kit **NOTE:** The 1200W Common Slot 380VDC Hot Plug Power Supply Kit does not include a power cord.	684539-B21
	HP Common Slot 277VAC Power Supplies	
	HP 500W Common Slot 277VAC Hot Plug Power Supply Kit	717362-B21
	HP 750W Common Slot 277VAC Hot Plug Power Supply Kit	717364-B21
	HP 1200W Common Slot 277VAC Hot Plug Power Supply Kit **NOTE:** The 1200W Common Slot 277VAC Hot Plug Power Supply Kit does not include a power cord. High voltage power cable option kits are sold separately.	717359-B21
	HP Common Slot Titanium Power Supply Kits **NOTE:** The following power supply offers 96% efficiency with support for HP Power Discovery Services.	
	HP 750W Common Slot Titanium Hot Plug Power Supply Kit	697581-B21
	NOTE: Option Kits for AC power supplies include the power supply and one PDU IEC cable.	
	NOTE: HP ProLiant servers ship with an IEC-IEC power cord used for rack mounting with Power Distribution Units (PDUs). For a full list of optional HP power cords please go to http://www.hp.com/products/powercords	
	NOTE: Power Specification and Technical Content for supported power supplies can be found at: http://h18000.www1.hp.com/products/quickspecs/14209_na/14209_na.html	

Step 3: Choose Additional Factory Integratable Options (only one of the following from each list unless otherwise noted)

HP Rack Kits	**NOTE:** Gen8 rail kits have changed significantly from prior generation rail kits. Please take a moment to review the installation documentation that comes with the server to help you with the installation of your Gen8 server. **NOTE:** Rail kits are optional for DL380p Gen8 and are no longer included standard with the server. Customers have the option to purchase their server without a rail kit. The HP 2U Gen8 Cable Management Arm is not available when using Friction Rails. **NOTE:** To assist in the installation of the server into the rack, an optional installation tool is available by contacting your local services representative (p/n 695539-001). **Caution:** HP recommends that a minimum of two people are required for all Rack Server installations. Please refer to your installation instructions for proper tools and number of people to use for any installation. **NOTE:** See HP Rack Options in Additional Options section of this QuickSpecs for more rack kit choices.	
	HP 2U FIO Friction Rail Kit **NOTE:** Kit contains non-telescoping friction rails which do not allow for in-rack serviceability. The HP Gen8 Cable Management Arm is not available when using Friction Rails.	663476-B21
HP Insight Software	HP Insight Control including 1yr 24x7 Support ProLiant ML/DL/BL-bundle Single Server FIO License	C6N36A

Configuration Information - Factory Integrated Models

HP OneView	HP OneView for ProLiant DL Server incl 3yr 24x7 Supp FIO Bundle Physical 1 Svr Lic	E5Y43A

Step 4: Choose Additional Options for Factory Integration

NOTE: For additional options, please refer to the "Core Options and Additional Options" section below.

Core Options

NOTE: Some options may not be integrated at the factory. Contact your local sales representative for additional information.

HP Unique Options	HP DL380p/560 Gen8 3 Slot PCI-E Riser Kit	653206-B21
	HP DL380p/560 Gen8 2 Slot 2x16 PCI-E Riser Kit	653208-B21
	HP DL380p Gen8 Double Wide Graphic Processing Unit Drive Cage Kit **NOTE:** Kit is required to support cards greater than 9.5", in the secondary position only. **NOTE:** Two 1200W Power supply kits and 2 processors are required for this riser **NOTE:** This riser supports two single wide, or one double wide CPU option in the secondary riser position **NOTE:** The double wide riser cage kit is not supported in the 8LFF, 12LFF and 25SFF Configuration Servers.	728543-B21
	HP DL380p Gen8 Double Wide Slot1 Riser Cage Kit **NOTE:** Kit is required to support cards greater than 9.5", in the primary position only, and supports one double wide card and a single PCI card in this riser. **NOTE:** This riser supports one single wide, or one double wide GPU option in the primary riser position **NOTE:** The double wide riser cage kit is not supported in the 8LFF, 12LFF and 25SFF Configuration Servers	752803-B21
	HP DL380p Gen8 NEBS Conversion Cage Kit **NOTE:** This conversion kit is only available for the 8SFF base server model. **NOTE:** A NEBS conversion cage kit is required for each riser in an 8SFF base server for the server to meet NEBS and ETSI certification.	707865-B21
HP Processors	**Entry Processors - E5-2600 v2 series Processor kits** **NOTE:** All support up to 1333MHz memory speeds.	
	HP DL380p Gen8 Intel® Xeon® E5-2609v2 (2.5GHz/4-core/10MB/80W) Processor Kit	715222-B21
	HP DL380p Gen8 Intel® Xeon® E5-2603v2 (1.8GHz/4-core/10MB/80W) Processor Kit	715223-B21
	Base Processors - E5-2600 v2 series Processor kits **NOTE:** All support up to1600MHz DDR3 memory speeds.	
	HP DL380p Gen8 Intel® Xeon® E5-2640v2 (2.0GHz/8-core/20MB/95W) Processor Kit	715219-B21
	HP DL380p Gen8 Intel® Xeon® E5-2630v2 (2.6GHz/6-core/15MB/80W) Processor Kit	715220-B21
	HP DL380p Gen8 Intel® Xeon® E5-2620v2 (2.1GHz/6-core/15MB/80W) Processor Kit	715221-B21
	HP DL380p Gen8 Intel® Xeon® E5-2650Lv2 (1.7GHz/10-core/25MB/70W) Processor Kit	715229-B21
	HP DL380p Gen8 Intel® Xeon® E5-2630Lv2 (2.4GHz/6-core/15MB/60W) Processor Kit	715230-B21
	Performance Processors - E5-2600 v2 series Processor kits **NOTE:** All support up to 1866MHz DDR3 memory speeds	
	HP DL380p Gen8 Intel® Xeon® E5-2697v2 (2.7GHz/12-core/30MB/130W) Processor Kit	715224-B21
	HP DL380p Gen8 Intel® Xeon® E5-2695v2 (2.4GHz/12-core/30MB/115W) Processor Kit	715225-B21
	HP DL380p Gen8 Intel® Xeon® E5-2690v2 (3.0GHz/10-core/25MB/130W) Processor Kit	715214-B21
	HP DL380p Gen8 Intel® Xeon® E5-2680v2 (2.8GHz/10-core/25MB/115W) Processor Kit	715215-B21
	HP DL380p Gen8 Intel® Xeon® E5-2670v2 (2.5GHz/10-core/25MB/115W) Processor Kit	715216-B21
	HP DL380p Gen8 Intel® Xeon® E5-2667v2 (3.3GHz/8-core/25MB/130W) Processor	715226-B21

Core Options

	Kit	
	HP DL380p Gen8 Intel® Xeon® E5-2660v2 (2.2GHz/10-core/25MB/95W) Processor Kit	715217-B21
	HP DL380p Gen8 Intel® Xeon® E5-2650v2 (2.6GHz/8-core/20MB/95W) Processor Kit	715218-B21
	HP DL380p Gen8 Intel® Xeon® E5-2643v2 (3.5GHz/6-core/25MB/130W) Processor Kit	715227-B21
	HP DL380p Gen8 Intel® Xeon® E5-2637v2 (3.5GHz/4-core/15MB/130W) Processor Kit	715228-B21
	Entry Processors - E5-2600 series Processor kits **NOTE:** All support up to 1066MHz memory speeds.	
	HP DL380p Gen8 Intel® Xeon® E5-2609 (2.40GHz/4-core/10MB/80W) Processor Kit	662252-B21
	HP DL380p Gen8 Intel® Xeon® E5-2603 (1.80GHz/4-core/10MB/80W) Processor Kit	662254-B21
	Base Processors - E5-2600 series Processor kits **NOTE:** All support up to1333MHz DDR3 memory speeds.	
	HP DL380p Gen8 Intel® Xeon® E5-2640 (2.5GHz/6-core/15MB/95W) Processor Kit	662246-B21
	HP DL380p Gen8 Intel® Xeon® E5-2630 (2.3GHz/6-core/15MB/95W) Processor Kit	662248-B21
	HP DL380p Gen8 Intel® Xeon® E5-2620 (2.0GHz/6-core/15MB/95W) Processor Kit	662250-B21
	HP DL380p Gen8 Intel® Xeon® E5-2630L (2.0GHz/6-core/15MB/60W) Processor Kit	675092-B21
	Performance Processors - E5-2600 series Processor kits **NOTE:** All support up to 1600MHz DDR3 memory speeds.	
	HP DL380p Gen8 Intel® Xeon® E5-2690 (2.9GHz/8-core/20MB/135W) Processor Kit	662226-B21
	HP DL380p Gen8 Intel® Xeon® E5-2680 (2.7GHz/8-core/20MB/130W) Processor Kit	662228-B21
	HP DL380p Gen8 Intel® Xeon® E5-2670 (2.6GHz/8-core/20MB/115W) Processor Kit	662240-B21
	HP DL380p Gen8 Intel® Xeon® E5-2667 (2.9GHz/6-core/15MB/130W) Processor Kit	662214-B21
	HP DL380p Gen8 Intel® Xeon® E5-2665 (2.4GHz/8-core/20MB/115W) Processor Kit	666509-B21
	HP DL380p Gen8 Intel® Xeon® E5-2660 (2.2GHz/8-core/20MB/95W) Processor Kit	662242-B21
	HP DL380p Gen8 Intel® Xeon® E5-2650 (2.0GHz/8-core/20MB/95W) Processor Kit	662244-B21
	HP DL380p Gen8 Intel® Xeon® E5-2650L (1.8GHz/8-core/20MB/70W) Processor Kit	662256-B21
	HP DL380p Gen8 Intel® Xeon® E5-2643 (3.3GHz/4-core/10MB/130W) Processor Kit	662216-B21
	HP DL380p Gen8 Intel® Xeon® E5-2637 (3.0GHz/2-core/5MB/80W) Processor Kit	662224-B21
	NOTE: Up to 2 processors supported. Performance and Energy Star Model configurations include two processors. **NOTE:** HT indicates that the processor model supports Intel® Hyper-Threading Technology **NOTE:** Turbo2: Intel® Turbo Boost Technology 2.0 provides more computing power when you need it with performance that adapts to spikes in your workload and delivers more performance upside than then previous generation turbo technology. **NOTE:** DDR3 speed is the maximum memory speed of the processor. Actual memory speed may depend on the quantity and type of DIMMs installed.	
HP Memory	**NOTE:** HP memory from previous generation servers are not qualified or warranted with this HP ProLiant Server. HP SmartMemory is required to realize the memory performance improvements and enhanced functionality listed in this document for Gen8. For additional information, please see the HP SmartMemory QuickSpecs at: http://h18000.www1.hp.com/products/quickspecs/14225_na/14225_na.html **NOTE:** LRDIMM, RDIMM and UDIMM, are all distinct memory technologies and cannot be mixed within a server. The majority of ProLiant Gen8 servers support LRDIMM, RDIMM and UDIMMs. **Registered DIMMs (RDIMMs)**	

Core Options

NOTE: The following memory is supported by the E5-2600 v2 series Processors.

HP 4GB (1x4GB) Single Rank x4 PC3L-12800R (DDR3-1600) Registered CAS-11 Low Voltage Memory Kit	713981-B21
HP 4GB (1x4GB) Single Rank x4 PC3-14900R (DDR3-1866) Registered CAS-13 Memory Kit	708637-B21
HP 8GB (1x8GB) Dual Rank x4 PC3L-12800R (DDR3-1600) Registered CAS-11 Low Voltage Memory Kit	713983-B21
HP 8GB (1x8GB) Single Rank x4 PC3L-12800R (DDR3-1600) Registered CAS-11 Low Voltage Memory Kit	731765-B21
HP 8GB (1x8GB) Dual Rank x4 PC3-14900R (DDR3-1866) Registered CAS-13 Memory Kit	708639-B21
HP 8GB (1x8GB) Single Rank x4 PC3-14900R (DDR3-1866) Registered CAS-13 Memory Kit	731761-B21
HP 16GB (1x16GB) Dual Rank x4 PC3L-12800R (DDR3-1600) Registered CAS-11 Low Voltage Memory Kit	713985-B21
HP 16GB (1x16GB) Dual Rank x4 PC3-14900R (DDR3-1866) Registered CAS-13 Memory Kit	708641-B21

Registered DIMMs (RDIMMs)

NOTE: The following memory is supported by the E5-2600 series Processors.

HP 4GB (1x4GB) Single Rank x4 PC3L-10600R (DDR3-1333) Registered CAS-9 Low Voltage Memory Kit	647893-B21
HP 4GB (1x4GB) Single Rank x4 PC3-12800R (DDR3-1600) Registered CAS-11 Memory Kit	647895-B21
HP 8GB (1x8GB) Dual Rank x4 PC3L-10600R (DDR3-1333) Registered CAS-9 Low Voltage Memory Kit	647897-B21
HP 8GB (1x8GB) Single Rank x4 PC3-12800R (DDR3-1600) Registered CAS-11 Memory Kit	647899-B21
HP 8GB (1x8GB) Dual Rank x4 PC3-12800R (DDR3-1600) Registered CAS-11 Memory Kit	690802-B21
HP 16GB (1x16GB) Dual Rank x4 PC3L-10600R (DDR3-1333) Registered CAS-9 Low Voltage Memory Kit	647901-B21
HP 16GB (1x16GB) Dual Rank x4 PC3-12800R (DDR3-1600) Registered CAS-11 Memory Kit	672631-B21

Unbuffered with ECC DIMMs (UDIMMs)

NOTE: The following memory is supported by the E5-2600 v2 series Processors.

HP 2GB (1x2GB) Single Rank x8 PC3L-12800E (DDR3-1600) Unbuffered CAS-11 Low Voltage Memory Kit	713975-B21
HP 2GB (1x2GB) Single Rank x8 PC3-14900E (DDR3-1866) Unbuffered CAS-13 Memory Kit	708631-B21
HP 4GB (1x4GB) Dual Rank x8 PC3L-12800E (DDR3-1600) Unbuffered CAS-11 Low Voltage Memory Kit	713977-B21
HP 4GB (1x4GB) Dual Rank x8 PC3-14900E (DDR3-1866) Unbuffered CAS-13 Memory Kit	708633-B21
HP 8GB (1x8GB) Dual Rank x8 PC3L-12800E (DDR3-1600) Unbuffered CAS-11 Low Voltage Memory Kit	713979-B21
HP 8GB (1x8GB) Dual Rank x8 PC3-14900E (DDR3-1866) Unbuffered CAS-13 Memory Kit	708635-B21

Unbuffered with ECC DIMMs (UDIMMs)

NOTE: The following memory is supported by the E5-2600 series Processors.

Core Options

	HP 2GB (1x2GB) Single Rank x8 PC3-12800E (DDR3-1600) Unbuffered CAS-11 Memory Kit	669320-B21
	HP 2GB (1x2GB) Single Rank x8 PC3L-10600E (DDR3-1333) Unbuffered CAS-9 Low Voltage Memory Kit	647905-B21
	HP 4GB (1x4GB) Dual Rank x8 PC3-12800E (DDR3-1600) Unbuffered CAS-11 Memory Kit	669322-B21
	HP 4GB (1x4GB) Dual Rank x8 PC3L-10600E (DDR3-1333) Unbuffered CAS-9 Low Voltage Memory Kit	647907-B21
	HP 8GB (1x8GB) Dual Rank x8 PC3-12800E (DDR3-1600) Unbuffered CAS-11 Memory Kit	669324-B21
	HP 8GB (1x8GB) Dual Rank x8 PC3L-10600E (DDR3-1333) Unbuffered CAS-9 Low Voltage Memory Kit	647909-B21
	Load Reduced DIMMs (LRDIMMs) **NOTE:** The following memory is supported by the E5-2600 v2 series Processors.	
	HP 32GB (1x32GB) Quad Rank x4 PC3-14900L (DDR3-1866) Load Reduced CAS-13 Memory Kit	708643-B21
	Load Reduced DIMMs (LRDIMMs) **NOTE:** The following memory is supported by the E5-2600 series Processors.	
	HP 32GB (1x32GB) Quad Rank x4 PC3L-10600L (DDR3-1333) Load Reduced CAS-9 Low Voltage Memory Kit	647903-B21
	NOTE: All DDR3 memory option kits consist of one DIMM per kit. For detailed memory configuration rules and guidelines, please use the Online DDR3 Memory Configuration Tool: http://www.hp.com/go/ddr3memory-configurator. **NOTE:** Depending on the memory configuration and processor model, 1600MHz and 1333MHz memory may operate at a lower speed. Please see the see the "Memory" section later in this document and the Online Memory Configuration Tool for details at: http://www.hp.com/go/ddr3memory-configurator. **NOTE:** For additional memory rules and guidelines, see the "Memory" section later in this document. **NOTE:** For more information on ProLiant Energy Efficient Features, see: http://www.hp.com/go/proliant-energy-efficient **NOTE:** PC3L is a low voltage memory.	
HP Optical Drives	HP 12.7mm Slim SATA DVD-ROM JackBlack Optical Drive	652232-B21
	HP 12.7mm Slim SATA DVD-RW JackBlack Optical Drive	652235-B21
	HP Mobile USB Non Leaded System DVD RW Drive	701498-B21
HP Hard Drives	**NOTE:** The HP ProLiant DL380p Gen8 Smart Storage solutions are equipped with entirely re-designed Small Form Factor (SFF 2.5 in) and Large Form Factor (LFF 3.5 in) hot plug carriers for HP Qualified Hard Drives and Solid State Drives. These new carriers provide status and activity indicators as well as caution indicators for "Do Not Remove". **NOTE:** The components of a storage subsystem (e.g. the drive, the HBA/controller, firmware, and the server backplane) should operate at the same data transfer rate or the system bandwidth will be negotiated down to an acceptable level for all components. **NOTE:** Hard drives have either a one year or three year warranty; refer to the specific hard drive QuickSpecs for details. **NOTE:** All 12G SAS Hard drives only operate at 6G speeds in the DL380pGen8.	
	12G SAS Hot Plug with SmartDrive SFF (2.5-inch) Enterprise Drives	
	HP 1.8TB 12G SAS 10K rpm SFF (2.5-inch) SC Enterprise 512e 3yr Warranty Hard Drive	791034-B21

Core Options

HP 1.2TB 12G SAS 10K rpm SFF (2.5-inch) SC Enterprise 3yr Warranty Hard Drive	781518-B21
HP 900GB 12G SAS 10K rpm SFF (2.5-inch) SC Enterprise 3yr Warranty Hard Drive	785069-B21
HP 600GB 12G SAS 15K rpm SFF (2.5-inch) SC Enterprise 3yr Warranty Hard Drive	759212-B21
HP 600GB 12G SAS 10K rpm SFF (2.5-inch) SC Enterprise 3yr Warranty Hard Drive	781516-B21
HP 450GB 12G SAS 15K rpm SFF (2.5-inch) SC Enterprise 3yr Warranty Hard Drive	759210-B21
HP 300GB 12G SAS 15K rpm SFF (2.5-inch) SC Enterprise 3yr Warranty Hard Drive	759208-B21
HP 300GB 12G SAS 10K rpm SFF (2.5-inch) SC Enterprise 3yr Warranty Hard Drive	785067-B21
12G SAS Hot Plug SmartDrive LFF (3.5-inch) Converter Enterprise Drives	
HP 600GB 12G SAS 15K rpm LFF (3.5-inch) SC Converter Enterprise 3yr Warranty Hard Drive	765424-B21
HP 450GB 12G SAS 15K rpm LFF (3.5-inch) SC Converter Enterprise 3yr Warranty Hard Drive	737394-B21
HP 300GB 12G SAS 15K rpm LFF (3.5-inch) SC Converter Enterprise 3yr Warranty Hard Drive	737261-B21
12G SAS Hot Plug SFF (2.5-inch) SC 512e Drives	
HP 2TB 12G SAS 7.2K rpm SFF (2.5-inch) SC 512e 1yr Warranty Hard Drive	765466-B21
HP 1TB 12G SAS 7.2K rpm SFF (2.5-inch) SC 512e 1yr Warranty Hard Drive	765464-B21
HP 600GB 12G SAS 15K rpm SFF (2.5-inch) SC 512e Enterprise 3yr Warranty Hard Drive	748387-B21
12G SAS Hot Plug LFF (3.5-inch) Midline (MDL) 512e Drives	
HP 6TB 12G SAS 7.2K rpm LFF (3.5-inch) SC Midline 512e 1yr Warranty Hard Drive	765259-B21
HP 4TB 12G SAS 7.2K rpm LFF (3.5-inch) SC Midline 512e 1yr Warranty Hard Drive	765257-B21
12G SAS Hot Plug LFF (3.5-inch) SC 512e Performance Drives	
HP 8TB 12G SAS 7.2K rpm LFF (3.5-inch) SC 512e Helium 1yr Warranty Hard Drive	793703-B21
HP 6TB 12G SAS 7.2K rpm LFF (3.5-inch) SC 512e Helium 1yr Warranty Hard Drive	793699-B21
HP 6TB 12G SAS 7.2K rpm LFF (3.5-inch) SC 512e Performance 1yr Warranty Hard Drive	793671-B21
HP 4TB 12G SAS 7.2K rpm LFF (3.5-inch) SC 512e Performance 1yr Warranty Hard Drive	793669-B21
6G SAS Hot Plug with SmartDrive SFF (2.5-inch) Enterprise Drives	
HP 1.2TB 6G SAS 10K rpm SFF (2.5-inch) SC Dual Port Enterprise 3yr Warranty Hard Drive	718162-B21
HP 1.2TB 6G SAS 10K rpm SFF (2.5-inch) SC Dual Port ENT 3yr Wty Hard Drive/S-Buy	718162-S21
HP 900GB 6G SAS 10K rpm SFF (2.5-inch) SC Enterprise 3yr Warranty Hard Drive	652589-B21
HP 900GB 6G SAS 10K rpm SFF (2.5-inch) SC Enterprise 3yr Warranty Hard Drive/S-Buy	652589-S21
HP 600GB 6G SAS 10K rpm SFF (2.5-inch) SC Enterprise 3yr Warranty Hard Drive	652583-B21
HP 600GB 6G SAS 10K rpm SFF (2.5-inch) SC Enterprise 3yr Warranty Hard Drive/S-Buy	652583-S21
HP 450GB 6G SAS 10K rpm SFF (2.5-inch) SC Enterprise 3yr Warranty Hard Drive	652572-B21
HP 300GB 6G SAS 10K rpm SFF (2.5-inch) SC Enterprise 3yr Warranty Hard Drive	652564-B21
HP 300GB 6G SAS 10K rpm SFF (2.5-inch) SC Enterprise 3yr Warranty Hard Drive/S-Buy	652564-S21
HP 300GB 6G SAS 15K rpm SFF (2.5-inch) SC Enterprise 3yr Warranty Hard Drive	652611-B21
HP 300GB 6G SAS 15K rpm SFF (2.5-inch) SC Enterprise 3yr Warranty Hard Drive/S-Buy	652611-S21

Core Options

HP 146GB 6G SAS 15K rpm SFF (2.5-inch) SC Enterprise 3yr Warranty Hard Drive	652605-B21
HP 146GB 6G SAS 15K rpm SFF (2.5-inch) SC Enterprise 3yr Warranty Hard Drive/S-Buy	652605-S21
6G SAS Hot Plug SmartDrive SFF (2.5-inch) Midline Drives	
HP 1TB 6G SAS 7.2K rpm SFF (2.5-inch) SC Midline 1yr Warranty Hard Drive	652749-B21
HP 500GB 6G SAS 7.2K rpm SFF (2.5-inch) SC Midline 1yr Warranty Hard Drive	652745-B21
6G SAS Hot Plug SmartDrive LFF (3.5-inch) Midline Drives	
HP 6TB 6G SAS 7.2K rpm LFF (3.5-inch) SC Midline 1yr Warranty Hard Drive	761477-B21
HP 4TB 6G SAS 7.2K rpm LFF (3.5-inch) SC Midline 1yr Warranty Hard Drive	695510-B21
HP 3TB 6G SAS 7.2K rpm LFF (3.5-inch) SC Midline 1yr Warranty Hard Drive	652766-B21
HP 2TB 6G SAS 7.2K rpm LFF (3.5-inch) SC Midline 1yr Warranty Hard Drive	652757-B21
HP 1TB 6G SAS 7.2K rpm LFF (3.5-inch) SC Midline 1yr Warranty Hard Drive	652753-B21
NOTE: Please see the QuickSpecs for Technical Specifications and additional information: http://h18000.www1.hp.com/products/quickspecs/12244_na/12244_na.html	
6G SATA Hot Plug with SmartDrive SFF (2.5-inch) Midline (MDL) Drives	
HP 1TB 6G SATA 7.2K rpm SFF (2.5-inch) SC Midline 1yr Warranty Hard Drive	655710-B21
HP 1TB 6G SATA 7.2K rpm SFF (2.5-inch) SC Midline 1yr Warranty Hard Drive/S-Buy	655710-S21
HP 500GB 6G SATA 7.2K rpm SFF (2.5-inch) SC Midline 1yr Warranty Hard Drive	655708-B21
HP 500GB 6G SATA 7.2K rpm SFF (2.5-inch) SC Midline 1yr Warranty Hard Drive/S-Buy	655708-S21
6G SATA Hot Plug with SmartDrive LFF (3.5-inch) Midline (MDL) Drives	
HP 6TB 6G SATA 7.2K rpm LFF (3.5-inch) SC Midline 1yr Warranty Hard Drive	753874-B21
HP 4TB 6G SATA 7.2k rpm LFF (3.5-inch) SC Midline 1yr Warranty Hard Drive	693687-B21
HP 3TB 6G SATA 7.2K rpm LFF (3.5-inch) SC Midline 1yr Warranty Hard Drive	628061-B21
HP 2TB 6G SATA 7.2K rpm LFF (3.5-inch) SC Midline 1yr Warranty Hard Drive	658079-B21
HP 1TB 6G SATA 7.2K rpm LFF (3.5-inch) SC Midline 1yr Warranty Hard Drive	657750-B21
HP 1TB 6G SATA 7.2K rpm LFF (3.5-inch) SC Midline 1yr Warranty Hard Drive/S-Buy	657750-S21
HP 500GB 6G SATA 7.2K rpm LFF (3.5-inch) SC Midline 1yr Warranty Hard Drive	658071-B21
HP 500GB 6G SATA 7.2K rpm LFF (3.5-inch) SC Midline 1yr Wty Hard Drive/S-Buy	658071-S21
6G SATA Hot Plug with SmartDrive LFF (3.5-inch) Midline (MDL) Drives	
HP 6TB 6G SATA 7.2K rpm LFF (3.5-inch) SC Midline 1yr Warranty Hard Drive	753874-B21
HP 4TB 6G SATA 7.2k rpm LFF (3.5-inch) SC Midline 1yr Warranty Hard Drive	693687-B21
HP 3TB 6G SATA 7.2K rpm LFF (3.5-inch) SC Midline 1yr Warranty Hard Drive	628061-B21
HP 2TB 6G SATA 7.2K rpm LFF (3.5-inch) SC Midline 1yr Warranty Hard Drive	658079-B21
HP 1TB 6G SATA 7.2K rpm LFF (3.5-inch) SC Midline 1yr Warranty Hard Drive	657750-B21
HP 500GB 6G SATA 7.2K rpm LFF (3.5-inch) SC Midline 1yr Warranty Hard Drive	658071-B21
6G SATA Hot Plug SFF (2.5-inch) SC 512e Drives	
HP 2TB 6G SATA 7.2K rpm SFF (2.5-inch) SC 512e 1yr Warranty Hard Drive	765455-B21
HP 1TB 6G SATA 7.2K rpm SFF (2.5-inch) SC 512e 1yr Warranty Hard Drive	765453-B21
6G SATA Hot Plug LFF (3.5-inch) Midline (MDL) 512e Drives	
HP 8TB 6G SATA 7.2K rpm LFF (3.5-inch) SC 512e Helium 1yr Warranty Hard Drive	793695-B21
HP 6TB 6G SATA 7.2K rpm LFF (3.5-inch) SC 512e Helium 1yr Warranty Hard Drive	793683-B21
HP 6TB 6G SATA 7.2K rpm LFF (3.5-inch) SC Midline 512e 1yr Warranty Hard Drive	765255-B21
HP 4TB 6G SATA 7.2K rpm LFF (3.5-inch) SC Midline 512e 1yr Warranty Hard Drive	765253-B21
6G SATA Hot Plug LFF (3.5-inch) SC 512e Performance Drives	

Core Options

HP 6TB 6G SATA 7.2K rpm LFF (3.5-inch) SC 512e Performance 1yr Warranty Hard Drive	793667-B21
HP 4TB 6G SATA 7.2K rpm LFF (3.5-inch) SC 512e Performance 1yr Warranty Hard Drives	793665-B21
6G SATA 2.5in WI-PLP SCC SSD	
HP 1.2TB 6G SATA Write Intensive-2 LFF 3.5-in SCC 3yr Wty Solid State Drive	804680-B21
HP 800GB 6G SATA Write Intensive-2 LFF 3.5-in SCC 3yr Wty Solid State Drive	804674-B21
HP 400GB 6G SATA Write Intensive-2 LFF 3.5-in SCC 3yr Wty Solid State Drive	804668-B21
HP 200GB 6G SATA Write Intensive-2 LFF 3.5-in SCC 3yr Wty Solid State Drive	804642-B21
HP 800GB 6G SATA Write Intensive-2 LFF 3.5-in LPC 3yr Wty Solid State Drive	831725-B21
6G SATA Hot Plug MU-3 SFF (2.5-inch) SC Solid State Drives	
HP 1.92TB 6G SATA Mixed Use-3 SFF 2.5-in SC 3yr Wty Solid State Drive	817011-B21
HP 960GB 6G SATA Mixed Use-3 SFF 2.5-in SC 3yr Wty Solid State Drive	816995-B21
HP 480GB 6G SATA Mixed Use-3 SFF 2.5-in SC 3yr Wty Solid State Drive	816985-B21
HP 240GB 6G SATA Mixed Use-3 SFF 2.5-in SC 3yr Wty Solid State Drive	816975-B21
HP 120GB 6G SATA Mixed Use-3 SFF 2.5-in SC 3yr Wty Solid State Drive	816965-B21
6G SATA Hot Plug RI-3 SFF (2.5-inch) SC Solid State Drives	
HP 3.84TB 6G SATA Read Intensive-3 SFF 2.5-in SC 3yr Wty Solid State Drive	816929-B21
HP 1.92TB 6G SATA Read Intensive-3 SFF 2.5-in SC 3yr Wty Solid State Drive	816919-B21
HP 960GB 6G SATA Read Intensive-3 SFF 2.5-in SC 3yr Wty Solid State Drive	816909-B21
HP 480GB 6G SATA Read Intensive-3 SFF 2.5-in SC 3yr Wty Solid State Drive	816899-B21
HP 240GB 6G SATA Read Intensive-3 SFF 2.5-in SC 3yr Wty Solid State Drive	816889-B21
HP 120GB 6G SATA Read Intensive-3 SFF 2.5-in SC 3yr Wty Solid State Drive	816879-B21
6G SATA Hot Plug LFF (3.5-inch) RI-3 SCC SSD	
HP 3.84TB 6G SATA Read Intensive-3 LFF 3.5-in SC Converter 3yr Wty Solid State Drive	816933-B21
HP 1.92TB 6G SATA Read Intensive-3 LFF 3.5-in SC Converter 3yr Wty Solid State Drive	816923-B21
HP 960GB 6G SATA Read Intensive-3 LFF 3.5-in SC Converter 3yr Wty Solid State Drive	816913-B21
HP 480GB 6G SATA Read Intensive-3 LFF 3.5-in SC Converter 3yr Wty Solid State Drive	816903-B21
HP 240GB 6G SATA Read Intensive-3 LFF 3.5-in SC Converter 3yr Wty Solid State Drive	816893-B21
HP 120GB 6G SATA Read Intensive-3 LFF 3.5-in SC Converter 3yr Wty Solid State Drive	816883-B21
6G SATA Hot Plug LFF (3.5-inch) MU-3 SCC SSD	
HP 1.92TB 6G SATA Mixed Use-3 LFF 3.5-in SC Converter 3yr Wty Solid State Drive	817015-B21
HP 960GB 6G SATA Mixed Use-3 LFF 3.5-in SC Converter 3yr Wty Solid State Drive	816999-B21
HP 480GB 6G SATA Mixed Use-3 LFF 3.5-in SC Converter 3yr Wty Solid State Drive	816989-B21
HP 240GB 6G SATA Mixed Use-3 LFF 3.5-in SC Converter 3yr Wty Solid State Drive	816979-B21
HP 120GB 6G SATA Mixed Use-3 LFF 3.5-in SC Converter 3yr Wty Solid State Drive	816969-B21
6G SATA 3.5in MU-PLP SCC SSD	
HP 1.6TB 6G SATA Mixed Use-2 LFF 3.5-in SCC 3yr Wty Solid State Drive	804634-B21
HP 800GB 6G SATA Mixed Use-2 LFF 3.5-in SCC 3yr Wty Solid State Drive	804628-B21
HP 480GB 6G SATA Mixed Use-2 LFF 3.5-in SCC 3yr Wty Solid State Drive	832417-B21
HP 200GB 6G SATA Mixed Use-2 LFF 3.5-in SCC 3yr Wty Solid State Drive	804616-B21
6G SATA 3.5in RI-PLP SCC SSD	
HP 1.6TB 6G SATA Read Intensive-2 LFF 3.5-in SCC 3yr Wty Solid State Drive	804608-B21

Core Options

HP 800GB 6G SATA Read Intensive-2 LFF 3.5-in SCC 3yr Wty Solid State Drive	804602-B21
HP 480GB 6G SATA Read Intensive-2 LFF 3.5-in SCC 3yr Wty Solid State Drive	804596-B21
HP 240GB 6G SATA Read Intensive-2 LFF 3.5-in SCC 3yr Wty Solid State Drive	804590-B21
HP 120GB 6G SATA Read Intensive-2 LFF 3.5-in SCC 3yr Wty Solid State Drive	804584-B21
HP 80GB 6G SATA Read Intensive-2 LFF 3.5-in SCC 3yr Wty Solid State Drive	804578-B21
6G SATA 2.5in WI-PLP SC SSD	
HP 1.2TB 6G SATA Write Intensive-2 SFF 2.5-in SC 3yr Wty Solid State Drive	804677-B21
HP 800GB 6G SATA Write Intensive-2 SFF 2.5-in SC 3yr Wty Solid State Drive	804671-B21
HP 400GB 6G SATA Write Intensive-2 SFF 2.5-in SC 3yr Wty Solid State Drive	804665-B21
HP 200GB 6G SATA Write Intensive-2 SFF 2.5-in SC 3yr Wty Solid State Drive	804639-B21
6G SATA 2.5in MU-PLP SC SSD	
HP 1.6TB 6G SATA Mixed Use-2 SFF 2.5-in SC 3yr Wty Solid State Drive	804631-B21
HP 800GB 6G SATA Mixed Use-2 SFF 2.5-in SC 3yr Wty Solid State Drive	804625-B21
HP 480GB 6G SATA Mixed Use-2 SFF 2.5-in SC 3yr Wty Solid State Drive	832414-B21
HP 200GB 6G SATA Mixed Use-2 SFF 2.5-in SC 3yr Wty Solid State Drive	804613-B21
6G SATA 2.5in RI-PLP SC SSD	
HP 1.6TB 6G SATA Read Intensive-2 SFF 2.5-in SC 3yr Wty Solid State Drive	804605-B21
HP 800GB 6G SATA Read Intensive-2 SFF 2.5-in SC 3yr Wty Solid State Drive	804599-B21
HP 480GB 6G SATA Read Intensive-2 SFF 2.5-in SC 3yr Wty Solid State Drive	804593-B21
HP 240GB 6G SATA Read Intensive-2 SFF 2.5-in SC 3yr Wty Solid State Drive	804587-B21
HP 120GB 6G SATA Read Intensive-2 SFF 2.5-in SC 3yr Wty Solid State Drive	804581-B21
HP 80GB 6G SATA Read Intensive-2 SFF 2.5-in SC 3yr Wty Solid State Drive	804575-B21
NOTE: Please see the QuickSpecs for Technical Specifications and additional information: http://h18000.www1.hp.com/products/quickspecs/13021_na/13021_na.html	
12G SAS Hot Plug Value Endurance SFF (2.5-inch) Enterprise Value SSD	
HP 1.6TB 12G SAS Value Endurance SFF 2.5-in SC Enterprise Value 3yr Wty Solid State Drive	762263-B21
HP 800GB 12G SAS Value Endurance SFF 2.5-in SC Enterprise Value 3yr Wty Solid State Drive	762261-B21
12G SAS Hot Plug Value Endurance LFF (3.5-inch) Enterprise Value SSD	
HP 1.6TB 12G SAS Value Endurance LFF 3.5-in SC Enterprise Value 3yr Wty Solid State Drive	762272-B21
HP 800GB 12G SAS Value Endurance LFF 3.5-in SC Enterprise Value 3yr Wty Solid State Drive	762270-B21
12G SAS Mainstream Endurance Hot Plug SFF (2.5-inch) Enterprise Mainstream H2 Solid State Drives	
HP 1.6TB 12G SAS Mainstream Endurance SFF 2.5-in ENT Mainstream SC 3yr Wty H2 Solid State Drive	779176-B21
HP 800GB 12G SAS Mainstream Endurance SFF 2.5-in ENT Mainstream SC 3yr Wty H2 Solid State Drive	779172-B21
HP 400GB 12G SAS Mainstream Endurance SFF 2.5-in ENT Mainstream SC 3yr Wty H2 Solid State Drive	779168-B21
HP 200GB 12G SAS Mainstream Endurance SFF 2.5-in ENT Mainstream SC 3yr Wty H2 Solid State Drive	779164-B21
12G SAS Hot Plug SFF (2.5-inch) SC Read/Write Intensive Solid State Drives	
HP 1.92TB 12G SAS Read Intensive SFF 2.5-in SC 3yr Wty Solid State Drive	802891-B21

Core Options

HP 800GB 12G SAS Write Intensive SFF 2.5-in SC 3yr Wty Solid State Drive	802586-B21
HP 400GB 12G SAS Write Intensive SFF 2.5-in SC 3yr Wty Solid State Drive	802582-B21
HP 200GB 12G SAS Write Intensive SFF 2.5-in SC 3yr Wty Solid State Drive	802578-B21
6G SATA Value Endurance Hot Plug SFF (2.5-inch) Enterprise Boot SSD	
HP 120GB 6G SATA Value Endurance SFF 2.5-in SC Enterprise Boot 3yr Wty Solid State Drive	717965-B21
HP 80GB 6G SATA Value Endurance SFF 2.5-in SC Enterprise Boot 3yr Wty Solid State Drive	734360-B21
6G SATA Value Endurance Hot Plug LFF (3.5-inch) Enterprise Boot SSD	
HP 120GB 6G SATA Value Endurance LFF 3.5-in SC Enterprise Boot 3yr Wty Solid State Drive	718171-B21
HP 80GB 6G SATA Value Endurance LFF 3.5-in SC Enterprise Boot 3yr Wty Solid State Drive	734362-B21
6G SATA Hot Plug Value Endurance LFF (3.5-inch) Converter Enterprise Value M1 Solid State Drives	
HP 800GB 6G SATA Value Endurance LFF 3.5-in SC Converter ENT Value 3yr Wty M1 Solid State Drive	764945-B21
HP 480GB 6G SATA Value Endurance LFF 3.5-in SC Converter ENT Value 3yr Wty M1 Solid State Drive	764943-B21
HP 240GB 6G SATA Value Endurance LFF 3.5-in SC Converter ENT Value 3yr Wty M1 Solid State Drive	764941-B21
HP 120GB 6G SATA Value Endurance LFF 3.5-in SC Converter ENT Value 3yr Wty M1 Solid State Drive	764939-B21
6G SATA Hot Plug Value Endurance LFF (3.5-inch) Converter Enterprise Value G1 Solid State Drives	
HP 480GB 6G SATA Value Endurance LFF 3.5-in SC Converter ENT Value 3yr Wty G1 Solid State Drive	756660-B21
HP 240GB 6G SATA Value Endurance LFF 3.5-in SC Converter ENT Value 3yr Wty G1 Solid State Drive	756639-B21
HP 120GB 6G SATA Value Endurance LFF 3.5-in SC Converter ENT Value 3yr Wty G1 Solid State Drive	756624-B21
6G SATA Hot Plug Value Endurance SFF (2.5-inch) Enterprise Value G1 Solid State Drives	
HP 480GB 6G SATA Value Endurance SFF 2.5-in SC Enterprise Value 3yr Wty G1 Solid State Drive	756657-B21
HP 120GB 6G SATA Value Endurance SFF 2.5-in SC Enterprise Value 3yr Wty G1 Solid State Drive	756621-B21
6G SATA Value Endurance Hot Plug SFF (2.5-inch) Enterprise Value Solid State Drives	
HP 1.6TB 6G SATA Value Endurance SFF 2.5-in SC Enterprise Value 3yr Wty Solid State Drive	757339-B21
HP 800GB 6G SATA Value Endurance SFF 2.5-in SC Enterprise Value 3yr Wty Solid State Drive	717973-B21
HP 480GB 6G SATA Value Endurance SFF 2.5-in SC Enterprise Value 3yr Wty Solid State Drive	717971-B21
HP 600GB 6G SATA Value Endurance SFF 2.5-in SC Enterprise Value 3yr Wty Solid State Drive	739898-B21
HP 300GB 6G SATA Value Endurance SFF 2.5-in SC Enterprise Value 3yr Wty Solid State Drive	739888-B21

Core Options

HP 240GB 6G SATA Value Endurance SFF 2.5-in SC Enterprise Value 3yr Wty Solid State Drive	717969-B21
6G SATA Value Endurance Hot Plug LFF (3.5-inch) Enterprise Value Solid State Drives	
HP 1.6TB 6G SATA Value Endurance LFF 3.5-in SC Converter Enterprise Value 3yr Wty Solid State Drive	757342-B21
HP 800GB 6G SATA Value Endurance LFF 3.5-in SC Enterprise Value 3yr Wty Solid State Drive	718189-B21
HP 600GB 6G SATA Value Endurance LFF 3.5-in SC Conveter Enterprise Value 3yr Wty Solid State Drive	739900-B21
HP 480GB 6G SATA Value Endurance LFF 3.5-in SC Enterprise Value 3yr Wty Solid State Drive	718183-B21
HP 300GB 6G SATA Value Endurance LFF 3.5-in SC Converter Enterprise Value 3yr Wty Solid State Drive	739890-B21
HP 240GB 6G SATA Value Endurance LFF 3.5-in SC Enterprise Value 3yr Wty Solid State Drive	718177-B21
6G SATA Hot Plug Light Endurance SFF (2.5-inch) Enterprise Light G1 Solid State Drives	
HP 960GB 6G SATA Light Endurance SFF 2.5-in SC Enterprise Light 3yr Wty G1 Solid State Drive	756601-B21
6G SATA Hot Plug Light Endurance LFF (3.5-inch) Enterprise Light G1 Solid State Drives	
HP 960GB 6G SATA Light Endurance LFF 3.5-in SC Converter ENT Light 3yr Wty G1 Solid State Drive	756604-B21
6G SATA Value Endurance Hot Plug SFF (2.5-inch) Enterprise Value M1 Solid State Drive	
HP 800GB 6G SATA Value Endurance SFF 2.5-in SC Enterprise Value 3yr Wty M1 Solid State Drive	764929-B21
HP 480GB 6G SATA Value Endurance SFF 2.5-in SC Enterprise Value 3yr Wty M1 Solid State Drive	764927-B21
HP 240GB 6G SATA Value Endurance SFF 2.5-in SC Enterprise Value 3yr Wty M1 Solid State Drive	764925-B21
HP 120GB 6G SATA Value Endurance SFF 2.5-in SC Enterprise Value 3yr Wty M1 Solid State Drive	764923-B21
6G SATA Mainstream Endurance Hot Plug SFF (2.5-inch) Enterprise Mainstream Solid State Drives	
HP 800GB 6G SATA Mainstream Endurance SFF 2.5-in SC Enterprise Mainstream 3yr Wty Solid State Drive	691868-B21
HP 400GB 6G SATA Mainstream Endurance SFF 2.5-in SC Enterprise Mainstream 3yr Wty Solid State Drive	691866-B21
HP 200GB 6G SATA Mainstream Endurance SFF 2.5-in SC Enterprise Mainstream 3yr Wty Solid State Drive	691864-B21
HP 100GB 6G SATA Mainstream Endurance SFF 2.5-in SC Enterprise Mainstream 3yr Wty Solid State Drive	691862-B21
6G SATA Mainstream Endurance Hot Plug LFF (3.5-inch) Enterprise Mainstream Solid State Drives	
HP 800GB 6G SATA Mainstream Endurance LFF 3.5-in SC Enterprise Mainstream 3yr Wty Solid State Drive	691860-B21
HP 400GB 6G SATA Mainstream Endurance LFF 3.5-in SC Enterprise Mainstream 3yr	691856-B21

Core Options

	Wty Solid State Drive	
	HP 200GB 6G SATA Mainstream Endurance LFF 3.5-in SC Enterprise Mainstream 3yr Wty Solid State Drive	691854-B21
	HP 100GB 6G SATA Mainstream Endurance LFF 3.5-in SC Enterprise Mainstream 3yr Wty Solid State Drive	691852-B21
	6G SATA Hot Plug SFF (2.5-inch) SC Read Intensive Solid State Drives	
	HP 960GB 6G SATA Read Intensive SFF 2.5-in SC 3yr Wty Solid State Drive	789155-B21
	HP 480GB 6G SATA Read Intensive SFF 2.5-in SC 3yr Wty Solid State Drive	789145-B21
	HP 240GB 6G SATA Read Intensive SFF 2.5-in SC 3yr Wty Solid State Drive	789135-B21
	6G SATA Hot Plug LFF (3.5-inch) SC Read Intensive Solid State Drives	
	HP 960GB 6G SATA Read Intensive LFF 3.5-in SC Converter 3yr Wty Solid State Drive	789157-B21
	HP 480GB 6G SATA Read Intensive LFF 3.5-in SC Converter 3yr Wty Solid State Drive	789147-B21
	HP 240GB 6G SATA Read Intensive LFF 3.5-in SC Converter 3yr Wty Solid State Drive	789137-B21
	NOTE: Please see the QuickSpecs for Technical Specifications and additional information: http://h18000.www1.hp.com/products/quickspecs/14038_na/14038_na.html	
	Hard Drive Kits	
	NOTE: All Factory Integrated Models will be populated with sufficient hard drive blanks based on the number of initial hard drives ordered with the server. **NOTE:** The part numbers for single HDD blanks below are provided should the customer require replacement HDD blanks for their server.	
	HP Small Form Factor Hard Drive Blank Kit	666987-B21
	HP Large Form Factor Hard Drive Blank Kit	666986-B21
	HP DL380/DL385 Gen8 8 Small Form Factor Hard Drive Backplane Cage Kit **NOTE:** With upgrade of 8SFF Cage/Bkpln (662883-B21), there is no Optical Drive support. **NOTE:** All cables necessary for proper installation of the 8SFF Cage are included with this Kit. **NOTE:** With upgrade of 8SFF Cage/Bkpln (662883-B21), an additional storage controller is required. HP recommends the HP Smart Array P420/1GB FBWC 6Gb 2-ports Int SAS Controller (P/N 631670-B21). **NOTE:** The P822 controller has only two internal ports like the P420 controller and cannot be used to attach both 8SFF drive cages through a single controller. Please see the QuickSpecs for Technical Specifications and additional information: http://h18000.www1.hp.com/products/quickspecs/14341_na/14341_na.html **NOTE:** In Gen8, the 8+8SFF solution is designed as a performance configuration delivering maximum IOPS across the two drive cages. Customers seeking to have all drives in a single volume should consider the DL380p Gen8 25 SFF Configure-to-order Server (P/N 665554-B21) as a base.	662883-B21
	Hard Drive Cables	
	HP DL38x/DL360 Gen8 Embedded SATA Cable Kit	664009-B21
HP Networking	**Gigabit Ethernet adapters**	
	HP NC112T PCI Express Gigabit Server Adapter	503746-B21
	HP NC365T 4-port Ethernet Server Adapter	593722-B21
	HP Ethernet 1Gb 4-port 331T Adapter	647594-B21
	HP Ethernet 1Gb 2-port 361T Adapter	652497-B21
	HP Ethernet 1Gb 2-port 332T Adapter	615732-B21
	10 Gigabit Ethernet Adapters **NOTE:** A minimum of two Gigabytes (2 GB) of server memory is required per each	

Core Options

	adapter. **NOTE:** Direct Attach Cable (DAC) for copper environments or fiber transceivers and cables for fiber-optic environments must be purchased separately. Please see the related NIC QuickSpecs for Technical Specifications and additional information: http://www.hp.com/go/ProLiantNICs.	
	HP NC523SFP 10Gb 2-port Server Adapter	593717-B21
	HP Ethernet 10Gb 2-port 530SFP Adapter	652503-B21
	HP Ethernet 10Gb 2-port 530T Adapter	656596-B21
	HP Ethernet 10Gb 2-port 560SFP+ Adapter	665249-B21
	HP Ethernet 10Gb 2-port 561T Adapter	716591-B21
	HP NC552SFP 10Gb 2-port Ethernet Server Adapter	614203-B21
	HP Ethernet 10Gb 2-port 570SFP+ Adapter	718904-B21
	HP Ethernet 10Gb 2-port 571SFP+ Adapter	728987-B21
	FlexibleLOM Adapters	
	NOTE: Only one FlexibleLOM can be added to the server. These options are upgradeable and can be changed from the original configuration after the server is shipped. **NOTE:** Direct Attach Cable (DAC) for copper environments or fiber transceivers and cables for fiber-optic environments must be purchased separately. Please see the related NIC QuickSpecs for Technical Specifications and additional information: http://www.hp.com/go/ProLiantNICs.	
	HP Ethernet 1Gb 4-port 331FLR Adapter	629135-B21
	HP Ethernet 1Gb 4-port 366FLR Adapter	665240-B21
	HP FlexFabric 10Gb 2-port 526FLR-SFP+ Adapter	629138-B21
	HP Ethernet 10Gb 2-port 530FLR-SFP+ Adapter	647581-B21
	HP FlexFabric 10Gb 2-port 533FLR-T Adapter	700759-B21
	HP FlexFabric 10Gb 2-port 534FLR-SFP+ Adapter	700751-B21
	HP FlexFabric 10Gb 2-port 554FLR-SFP+ Adapter	629142-B21
	HP Ethernet 10Gb 2-port 560FLR-SFP+ Adapter	665243-B21
	HP Ethernet 10Gb 2-port 561FLR-T Adapter	700699-B21
	HP Ethernet 10Gb 2-port 570FLR-SFP+ Adapter	717491-B21
	HP Ethernet 10Gb 2-port 571FLR-SFP+ Adapter	728992-B21
	NOTE: Please see the QuickSpecs for Technical Specifications and additional information: http://www.hp.com/go/ProLiantNICs	
HP InfiniBand	QLogic InfiniBand 4X QDR PCI-E G2 Dual Port HCA	583211-B21
	HP InfiniBand 4X QDR ConnectX-2 PCIe G2 Dual Port HCA	592520-B21
	HP Infiniband FDR/Ethernet 10Gb/40Gb 2-port 544QSFP Adapter	649281-B21
	NOTE: For the following two InfiniBand Adapters, only 1 FlexibleLOM can be added to the server, which is selected in Step 2 for the "Configuration Information - Factory Integrated Models" section. These two options are for upgrade or change from original configuration. **NOTE:** FLR Indicates new HP FlexibleLOM Adapter series.	
	HP Infiniband FDR/Ethernet 10Gb/40Gb 2-port 544FLR-QSFP Adapter	649282-B21
	HP Infiniband QDR/Ethernet 10Gb 2-port 544FLR-QSFP Adapter	649283-B21
	HP InfiniBand FDR 2-port 545QSFP Adapter	702211-B21
	NOTE: 10Gb Ethernet requires the use of the QSFP to SFP+ adapter P/N 655874-B21. **NOTE:** Please see the QuickSpecs for additional information:	

Core Options

http://h18000.www1.hp.com/products/quickspecs/13078_na/13078_na.html

HP I/O Expansion Options	HP DL380p/560 Gen8 3 Slot PCI-E Riser Kit	653206-B21
	HP DL380p/560 Gen8 2 Slot 2x16 PCI-E Riser Kit	653208-B21
	HP DL380p Gen8 Double Wide Graphic Processing Unit Drive Cage Kit **NOTE:** Kit is required to support cards greater than 9.5", in the secondary position only. **NOTE:** Two 1200W Power supply kits and 2 processors are required for this riser **NOTE:** This riser supports two single wide, or one double wide CPU option in the secondary riser position **NOTE:** The double wide riser cage kit is not supported in the 8LFF, 12LFF and 25SFF Configuration Servers.	728543-B21
	HP DL380p Gen8 Double Wide Slot1 Riser Cage Kit **NOTE:** Kit is required to support cards greater than 9.5", in the primary position only, and supports one double wide card and a single PCI card in this riser. **NOTE:** This riser supports one single wide, or one double wide GPU option in the primary riser position **NOTE:** The double wide riser cage kit is not supported in the 8LFF, 12LFF and 25SFF Configuration Servers	752803-B21
	HP DL380p Gen8 NEBS Conversion Cage Kit **NOTE:** This conversion kit is only available for the 8SFF base server model. **NOTE:** A NEBS conversion cage kit is required for each riser in an 8SFF base server for the server to meet NEBS and ETSI certification.	707865-B21
HP Power Supplies	**NOTE:** Mixing of power supplies in the same server is not supported. All power supplies must be of the same output and efficiency rating. If non-matched power supplies are inserted, you will get errors, and operation will fail. **NOTE:** Prior to making a power supply selection it is highly recommended that the HP Power Advisor is run to determine the right size power supply for your server configuration. The HP Power Advisor is located at: http://www.hp.com/go/hppoweradvisor.	
	HP Common Slot Platinum Plus Power Supply Kits **NOTE:** The following Power Supplies offer 94% efficiency with support for Intelligent Power Discovery.	
	HP 460W Common Slot Platinum Plus Hot Plug Power Supply Kit	656362-B21
	HP 750W Common Slot Platinum Plus Hot Plug Power Supply Kit	656363-B21
	HP 1200W Common Slot Platinum Plus Hot Plug Power Supply Kit	656364-B21
	HP Common Slot Platinum Power Supply Kits **NOTE:** The following Power Supplies offer 94% efficiency to save on energy costs. HP Common Slot Platinum Power Supplies do not support Power Discovery Services and ship with a standard AC power connector.	
	HP 460W Common Slot Platinum Hot Plug Power Supply Kit	739252-B21
	HP 750W Common Slot Platinum Hot Plug Power Supply Kit	739254-B21
	HP 1200W Common Slot Platinum Hot Plug Power Supply Kit	748287-B21
	HP Common Slot Gold Power Supplies **NOTE:** The following Power Supplies offer 92% Efficiency.	
	HP 460W CS Gold Ht Plg Power Supply Kit	503296-B21
	HP 750W Common Slot Gold Hot Plug Power Supply Kit	512327-B21
	HP Common Slot -48VDC Power Supplies	
	HP 750W Common Slot -48VDC Hot Plug Power Supply Kit **NOTE:** The 750W Common Slot -48VDC Hot Plug Power Supply Kit does not include a	636673-B21

Core Options

	power cord. It has been designed with a terminal block connection that allows for custom design of power cords by the end user. To select an alternative power cord for your server, please review the HP Common Slot Power Supplies QuickSpecs	
	HP Common Slot 380VDC Power Supplies	
	HP 1200W Common Slot 380VDC Hot Plug Power Supply Kit **NOTE:** The 1200W Common Slot 380VDC Hot Plug Power Supply Kit does not include a power cord.	684539-B21
	HP Common Slot 277VAC Power Supplies	
	HP 500W Common Slot 277VAC Hot Plug Power Supply Kit	717362-B21
	HP 750W Common Slot 277VAC Hot Plug Power Supply Kit	717364-B21
	HP 1200W Common Slot 277VAC Hot Plug Power Supply Kit **NOTE:** The 1200W Common Slot 277VAC Hot Plug Power Supply Kit does not include a power cord. High voltage power cable option kits are sold separately.	717359-B21
	HP Common Slot Titanium Power Supply Kits **NOTE:** The following power supply offers 96% efficiency with support for HP Power Discovery Services.	
	HP 750W Common Slot Titanium Hot Plug Power Supply Kit	697581-B21
	NOTE: Option Kits contain optional power supply, an IEC power cable and PDU IEC cables.	
	NOTE: HP ProLiant servers ship with an IEC-IEC power cord used for rack mounting with Power Distribution Units (PDUs). For a full list of optional HP power cords please go to: http://www.hp.com/products/powercords	
	NOTE: Power Specification and Technical Content for supported power supplies can be found at: http://h18000.www1.hp.com/products/quickspecs/14209_na/14209_na.html	
HP Computation and Graphics Accelerators	**NOTE:** Each DL380pGen8 server will accommodate up to three single-width or two double width NVIDIA Quadro PCIe cards for high-end Quadro graphics, up to two NVIDIA GRID PCIe cards for virtual desktop graphics or up to two NVIDIA Tesla PCIe cards or Intel Xeon Phi Coprocessors for accelerated high performance computing. **NOTE:** For two double wide Graphics cards both double wide risers, and the 1200W PS are required.	
	HP 150W PCI-E Power Cable Kit	669777-B21
	HP 225W PCIe Power Cable Kit	728539-B21
	HP PCIe 10pin to 2x6pin Power Cable	757156-B21
	NVIDIA Quadro K2000 PCIe Graphics Adapter **NOTE**: This card only runs at PCIeGen2 speeds. NOTE: This is supported in the 728543-B21 riser in the secondary position (second processor required) or in the 752803-B21, primary position. Maximum 3 supported with both risers, 2 in the secondary position.	753959-B21
	NVIDIA Quadro K4000 PCI-E Graphics Adapter **NOTE**: This card only runs at PCIeGen2 speeds. **NOTE**: 1xK4000 is supported in the primary position with the riser 653206-B21, or in the secondary position with the riser 662885-B21 Requires the 150W cable (669777-B21) **NOTE:** 2xK4000 are supported in the secondary position with the riser 653208-B21 or 728543-B21 Requires the 225W Y cable 6p x 6p (757156-B21) **NOTE:** To support 3xK4000 both the primary riser (653206-B21) and the secondary riser is required (653208-B21, 662885-B21 or 728543-B21) - Would require both the 150W 9669777-B21) and the 225W Cable (757156-B21)	730870-B21
	NVIDIA Quadro K5000 PCI-E Graphics Adapter	730872-B21

Core Options

NOTE: This card only runs at PCIeGen2 speeds. **NOTE:** This is supported in the 728543-B21 riser in the secondary position (second processor required) or in the 752803-B21, primary position. Maximum 2 supported with both risers, support for 2 cards requires the 1200W PS to be selected	
NVIDIA Quadro K6000 PCI-E Graphics Adapter **NOTE:** This is supported with the Intel, E5-2600v2 processor series only. **NOTE:** This is supported in the 728543-B21 riser in the secondary position (second processor required) or in the 752803-B21, primary position. Maximum 2 supported with both risers, support for 2 cards requires the 1200W PS (717359-B21) to be selected.	730874-B21
HP NVIDIA GRID K1 Quad GPU PCIe Graphics Accelerator **NOTE**: This is supported with the Intel, E5-2600v2 processor series only. **NOTE**: This card only runs at PCIeGen2 speeds. **NOTE**: This is supported in the 728543-B21 riser in the secondary position (second processor required) or in the 752803-B21, primary position. Maximum 2 supported with both risers, support for 2 cards requires the 1200W PS to be selected.	J0G94A
NVIDIA GRID K2 Reverse Air Flow Dual GPU PCIe Graphics Accelerator **NOTE**: This is supported with the Intel, E5-2600v2 processor series only. **NOTE**: This card only runs at PCIeGen2 speeds. **NOTE:** This is supported in the 728543-B21 riser in the secondary position (second processor required) or in the 752803-B21, primary position. Maximum 2 supported with both risers, support for 2 cards requires the 1200W PS to be selected.	753958-B21
NVIDIA Tesla K40C 12GB Computational Accelerator **NOTE:** This is supported with the Intel, E5-2600v2 processor series only. **NOTE:** This is supported in the 728543-B21 riser in the secondary position (second processor required) or in the 752803-B21, primary position. Maximum 2 supported with both risers, support for 2 cards requires the 1200W PS to be selected.	753960-B21
Intel® Xeon® Phi 5110P Coprocessor Kit **NOTE**: This is supported with the Intel, E5-2600v2 processor series only. **NOTE**: This card only runs at PCIeGen2 speeds. **NOTE**: This is supported in the 728543-B21 riser in the secondary position (second processor required) or in the 752803-B21, primary position. Maximum 2 supported with both risers, support for 2 cards requires the 1200W PS to be selected.	C1P87A

Additional Options

NOTE: Some options may not be integrated at the factory. To ensure only valid configurations are ordered, HP recommends the use of an HP approved configurator. Contact your local sales representative for additional information.

HP Insight Software	**HP Insight Control**	
	HP Insight Control including 1yr 24x7 Technical Support and Updates Single Server License	C6N27A
	HP Insight Control Environment No Media 1 Server incl 1 year 24x7 Supp License/S-Buy	C6N27S
	HP Insight w/Microsoft System Center Essentials 2010 ROK w/1yr Physical 1 Server SW	C6N28ASE
	HP Insight Control Server Provisioning Media Kit	BD883A
	HP Insight Management Media Kit	C6N31A
	NOTE: Electronic and Flexible-Quantity licenses can be used to purchase multiple licenses with a single activation key. **NOTE:** Customer will receive a license entitlement certificate. The license entitlement certificate must be redeemed online or via fax in order to obtain the license activation key(s). Includes one year of 24 x 7 HP Software Technical Support and Update Service. **NOTE:** Licenses ship without media. The HP Insight Control Media Kit can be ordered separately, or can be downloaded at: http://www.hp.com/go/insightupdates. **NOTE:** For additional license options please see the QuickSpecs at: http://h18000.www1.hp.com/products/quickspecs/12631_na/12631_na.html	
	HP Integrated Lights-Out (iLO) Advanced for ProLiant	
	HP iLO Advanced including 1yr 24x7 Technical Support and Updates Single Server License	512485-B21
	HP iLO Advanced 1 Server License with 3yr 24x7 Tech Support and Updates	BD505A
	NOTE: For additional license options please see the QuickSpecs at: http://h18004.www1.hp.com/products/quickspecs/14276_na/14276_na.html **NOTE:** For more information, visit: http://www.hp.com/go/ilo	
Converged Infrastructure Management Software	**HP OneView**	
	HP OneView with iLO Advanced	
	HP OneView Media Kit Phys No Lic	E5Y37A
	HP OneView incl 3yr 24x7 Supp Phys 1 Svr Lic	E5Y34A
	HP OneView incl 3yr 24x7 Supp Flex Qty E-LTU	E5Y35AAE
	HP OneView without iLO Advanced	
	HP OneView w/o iLO including 3yr 24x7 Support 1 Server LTU	P8B24A
	HP OneView w/o iLO including 3yr 24x7 Support Flex Quantity E-LTU	P8B26AAE
	HP OneView w/o iLO including 3yr 24x7 Support FIO 1 Server LTU	P8B31A
	HP OneView w/o iLO Adv incl 3yr 24x7 Supp Phys 1 Svr Lic	E5Y38A
	HP OneView w/o iLO Adv inc 3yr 24x7 Supp Flex Qty E-LTU	E5Y39AAE
	NOTE: Please see the QuickSpecs for Technical Specifications and additional information: http://h18000.www1.hp.com/products/quickspecs/14621_na/14621_na.html	
High Performance Clusters	**HP Cluster Management Utility**	
	HP Insight Cluster Management Utility 1yr 24x7 Flexible License	QL803B
	HP Insight Cluster Management Utility 3yr 24x7 Flexible License	BD476A

Additional Options

	NOTE: These part numbers can be used to purchase one certificate for multiple licenses and support with a single activation key. Each license is for one node (server). Customer will receive a printed end user license agreement and license entitlement certificate via physical shipment. The license entitlement certificate must be redeemed online in order to obtain a license key. Customer also will receive a support agreement.	
	HP Insight Cluster Management Utility Media	BD477A
	NOTE: For additional license kits please see the QuickSpecs at: http://h18004.www1.hp.com/products/quickspecs/12612_na/12612_na.html	
HP I/O Accelerator Options	**Second Generation Accelerators**	
	HP 1205GB Multi Level Cell G2 PCIe ioDrive2 for ProLiant Servers	673646-B21
	NOTE: Please see the QuickSpecs for Technical Specifications and additional information: http://h18000.www1.hp.com/products/quickspecs/13587_na/13587_na.html	
HP PCIe Workload Accelerator Options	**Mainstream Endurance (ME) PCIe Workload Accelerators**	
	HP 1.4TB HH/HL Mainstream Endurance (ME) PCIe Workload Accelerator	729307-B21
	HP 700GB HH/HL Mainstream Endurance (ME) PCIe Workload Accelerator	729305-B21
	High Endurance (HE) PCIe Workload Accelerators	
	HP 700GB HH/HL High Endurance (HE) PCIe Workload Accelerator	708090-B21
	HP 350GB HH/HL High Endurance (HE) PCIe Workload Accelerator	708088-B21
	Value Endurance (VE) PCIe Workload Accelerators	
	HP 6.4TB FH/HL Value Endurance (VE) PCIe Workload Accelerator	763840-B21
	HP 3.2TB HH/HL Value Endurance (VE) PCIe Workload Accelerator	763838-B21
	HP 1.6TB HH/HL Value Endurance (VE) PCIe Workload Accelerator	763836-B21
	HP 1.3TB HH/HL Value Endurance (VE) PCIe Workload Accelerator	763834-B21
	Light Endurance (LE) PCIe Workload Accelerators	
	HP 5.2TB FH/HL Light Endurance (LE) PCIe Workload Accelerator	775672-B21
	HP 2.6TB HH/HL Light Endurance (LE) PCIe Workload Accelerator	775670-B21
	HP 1.3TB HH/HL Light Endurance (LE) PCIe Workload Accelerator	775668-B21
	HP 1.0TB HH/HL Light Endurance (LE) PCIe Workload Accelerator	775666-B21
	NOTE: Please see the QuickSpecs for Technical Specifications and additional information: http://h18000.www1.hp.com/products/quickspecs/14528_na/14528_na.html	
HP Security	HP Trusted Platform Module Option **NOTE:** The TPM (Trusted Platform Module) is a microcontroller chip that can securely store artifacts used to authenticate the server platform. These artifacts can include passwords, certificates and encryption keys. Windows® BitLocker™ Drive Encryption (BitLocker) is a data protection feature available in Windows Server® 2008. BitLocker leverages the enhanced security capabilities of a Trusted Platform Module (TPM) version 1.2. The TPM works with BitLocker to help protect user data and to ensure that a server running Windows Server 2008 has not been tampered with while the system was offline. For more information about TPM, including a white paper, go to: http://www.hp.com/go/TPM. **NOTE:** ProLiant OS pre-installed units will come with the partition required for TPM deployment. **NOTE:** The TPM key is unique to every TPM deployed server and must be retained. Misplacing or losing the key could result in data loss.	488069-B21

Additional Options

	HP 2U Security Bezel Kit	666988-B21
HP Storage Controllers	**SAS Controllers**	
	Smart Array P222 Controller **NOTE:** P222 requires (1) HP Mini SAS Straight to Straight 37in Cable Assembly (P/N 662897-B21)	
	HP Smart Array P222/512 FBWC 6Gb 1-port Int/1-port Ext SAS Controller	631667-B21
	Smart Array P420 Controller **NOTE:** P420 requires (2) HP Mini SAS Straight to Straight 37in Cable Assemblies (P/N 662897-B21)	
	HP Smart Array P420/1GB FBWC 6Gb 2-ports Int SAS Controller	631670-B21
	HP Smart Array P420/2GB FBWC 6Gb 2-ports Int SAS Controller	631671-B21
	Smart Array P421 Controller **NOTE:** If a P421 controller is selected for the 12LFF model, it cannot be populated in slot 1.	
	HP Smart Array P421/1GB FBWC 6Gb 2-ports Ext SAS Controller	631673-B21
	HP Smart Array P421/2GB FBWC 6Gb 2-ports Ext SAS Controller	631674-B21
	Smart Array P430 Controller **NOTE:** If a P430 controller is selected for any model, it cannot be populated in slots 3 or 4.	
	HP Smart Array P430/2GB FBWC 12Gb 1-port Int SAS Controller	698529-B21
	HP Smart Array P430/4GB FBWC 12Gb 1-port Int SAS Controller	698530-B21
	Smart Array P431 Controller	
	HP Smart Array P431/2GB FBWC 12Gb 2-ports Ext SAS Controller	698531-B21
	HP Smart Array P431/4GB FBWC 12Gb 2-ports Ext SAS Controller	698532-B21
	Smart Array P822 Controller **NOTE:** If a P822 controller is selected for the 12LFF or 25SFF model, it cannot be populated in slot 3.	
	HP Smart Array P822/2GB FBWC 6Gb 2-ports-Int/4-ports Ext SAS Controller **NOTE:** The P822 controller has only two internal ports like the P420 controller and cannot be used to attach both 8SFF drive cages through a single controller. Please see the QuickSpecs link below for Technical Specifications and additional information.	615418-B21
	Smart Array P830 Controller	
	HP Smart Array P830/4GB FBWC 12Gb 2-ports Int SAS Controller	698533-B21
	Optional Upgrades	
	HP 1GB P-series Smart Array Flash Backed Write Cache	631679-B21
	HP 2GB P-series Smart Array Flash Backed Write Cache	631681-B21
	HP 512MB P-series Smart Array Flash Backed Write Cache	661069-B21
	HP DL38Xp Gen8 8 Large Form Factor (LFF) P430/830 Cable Kit	729270-B21
	HP DL38Xp Gen8 12 Large Form Factor (LFF) P430/830 Cable Kit	729272-B21
	HP DL38Xp Gen8 25 Small Form Factor (SFF) P430/830 Cable Kit	729274-B21
	HP 6G SAS P430/830 Secondary Cable Kit	729276-B21
	HP 6G SAS P430/830 Primary Cable Kit	729278-B21
	HP Mini SAS/Straight to Straight Short Bypass Cable Assembly	697691-B21
	HP Mini SAS/Straight to Straight 25 SFF Bypass Cable Assembly	726974-B21
	HP SmartCache No Media 24x7 Technical Support 1 Svr License	D7S26A

Additional Options

	HP SmartCache No Media 24x7 Technical Support Flexible License	D7S27A
	HP SmartCache No Media 24x7 Technical Support Electronic License	D7S27AAE
	HP Secure Encryption No Media Flexible License per Drive	D8S84A
	HP Secure Encryption No Media E-LTU per Drive	D8S85AAE
	NOTE: Please see the QuickSpecs for Technical Specifications and additional information: http://h18000.www1.hp.com/products/quickspecs/14227_na/14227_na.html (Smart Array P222 Controller) http://h18000.www1.hp.com/products/quickspecs/14228_na/14228_na.html (Smart Array P420 Controller) http://h18000.www1.hp.com/products/quickspecs/14229_na/14229_na.html (Smart Array P421 Controller) http://h18000.www1.hp.com/products/quickspecs/14624_na/14624_na.html (Smart Array P430 Controller) http://h18000.www1.hp.com/products/quickspecs/14625_na/14625_na.html (Smart Array P431 Controller) http://h18000.www1.hp.com/products/quickspecs/14341_na/14341_na.html (Smart Array P822 Controller) http://h18000.www1.hp.com/products/quickspecs/14744_na/14744_na.html (Smart Array P830 Controller) http://h18000.www1.hp.com/products/quickspecs/14532_na/14532_na.html (SmartCache) http://h18000.www1.hp.com/products/quickspecs/14623_na/14623_na.html (Secure Encryption)	
	Host Bus Adapter	
	HP H220 Host Bus Adapter	650933-B21
	HP H221 PCIe 3.0 SAS Host Bus Adapter	729552-B21
	HP H222 Host Bus Adapter	650926-B21
	NOTE: Please see the QuickSpecs for Technical Specifications and additional information: http://h18004.www1.hp.com/products/quickspecs/14336_na/14336_na.html (HBA 220) http://h18004.www1.hp.com/products/quickspecs/14222_na/14222_na.html (HBA 221) http://h18004.www1.hp.com/products/quickspecs/14337_na/14337_na.html (HBA 222)	
	SCSI HBA	
	HP SC11Xe Ultra320 Single Channel/ PCIe x4 SCSI Host Bus Adapter	412911-B21
	NOTE: Please see the following QuickSpecs for additional information: http://h18000.www1.hp.com/products/quickspecs/12566_na/12566_na.html (SC11Xe HBA)	
HP Disk Enclosures	HP D3600 Enclosure	QW968A
	NOTE: See the D3000 Disk Enclosure QuickSpecs for additional information including configuration steps and additional options needed for a complete solution at: http://www8.hp.com/h20195/v2/GetDocument.aspx?docname=c04227611	
	HP D3700 Enclosure	QW967A
	NOTE: See the D3000 Disk Enclosure QuickSpecs for additional information including configuration steps and additional options needed for a complete solution at: http://www8.hp.com/h20195/v2/GetDocument.aspx?docname=c04227611	
	HP D2600 Disk Enclosure	AJ940A

Additional Options

	NOTE: See the D2000 Disk Enclosure QuickSpecs for additional information including configuration steps and additional options needed for a complete solution at: http://h18000.www1.hp.com/products/quickspecs/13404_na/13404_na.html	
	HP D2700 Disk Enclosure	AJ941A
	NOTE: See the D2000 Disk Enclosure QuickSpecs for additional information including configuration steps and additional options needed for a complete solution at: http://h18000.www1.hp.com/products/quickspecs/13404_na/13404_na.html	
	HP D6000 Dual I/O Module Disk Enclosure	QQ695A
	NOTE: See the D6000 Disk Enclosure QuickSpecs for additional information including configuration steps and additional options needed for a complete solution at: http://h18000.www1.hp.com/products/quickspecs/14419_na/14419_na.pdf	
HP Power Cords	**NOTE:** HP ProLiant servers ships with an IEC-IEC power cord used for rack mounting with Power Distribution Units (PDUs).	
	HP C13 - Nema 5-15P US/CA 110V 10Amp 1.83m Power Cord	AF556A
HP Tape Backup	**NOTE:** For the complete range of tape drives, autoloaders, libraries and media see: http://www.hp.com/go/tape. For hardware and software compatibility of HP tape backup products see: http://www.hp.com/storage/SPOCK	
	HP StoreEver LTO-6 Ultrium 6250 Tape Drive in 1U Rack-mount Kit	C0L99A
	HP StoreEver LTO-6 Ultrium 6650 SAS Internal Tape Drive	EH963A
	HP StoreEver LTO-6 Ultrium 6650 SAS External Tape Drive	EH964A
	HP StoreEver LTO-6 Ultrium 6250 Internal Tape Drive	EH969A
	HP StoreEver LTO-6 Ultrium 6250 External Tape Drive	EH970A
	HP StoreEver 1/8 G2 LTO-6 Ultrium 6250 FC Tape Autoloader	C0H19A
HP Tape Storage Systems	**HP StoreEver MSL6480**	
	HP StoreEver MSL6480 Scalable Base Module	QU625A
	NOTE: Please see the QuickSpecs for Technical Specifications and additional information: http://h18000.www1.hp.com/products/quickspecs/14604_na/14604_na.html	
HP Disk Backup	**NOTE:** For the complete range of RDX drives and media see: http://www.hp.com/go/rdx. For hardware and software compatibility of HP disk backup products see: http://www.hp.com/storage/SPOCK.	
	HP RDX Removable Disk Backup System	
	HP RDX320 USB3.0 External Disk Backup System	B7B63A
	HP RDX USB 3.0 External Docking Station	C8S07A
	HP RDX Removable Disk Backup Systems USB	
	HP RDX1000 USB3.0 Gen8 DL Server Module	B7B70A
	HP RDX USB 3.0 Gen8 DL Server Module Docking Station	C8S08A
	NOTE: RDX Gen8 DL Server Module is only compatible with Servers that have the 8-SFF HDD Bay Configurations. **NOTE:** Please see the QuickSpecs for additional part numbers, Technical Specifications, and additional information: http://h18000.www1.hp.com/products/quickspecs/13036_na/13036_na.html	
HP Storage Options	**Storage Fibre Channel HBA**	
	NOTE: For the complete listing of Fibre Channel Host Bus Adapters for Windows	

Additional Options

	2000, Windows Server 2003 and Linux, please see: http://h18006.www1.hp.com/storage/saninfrastructure/hba.html	
	Brocade Fibre Channel HBAs	
	HP 81B 8Gb 1-port PCIe Fibre Channel Host Bus Adapter	AP769B
	HP 82B 8Gb 2-port PCIe Fibre Channel Host Bus Adapter	AP770B
	Emulex Fibre Channel HBAs	
	HP 81E 8Gb 1-port PCIe Fibre Channel Host Bus Adapter	AJ762B
	HP 82E 8Gb 2-port PCIe Fibre Channel Host Bus Adapter	AJ763B
	HP StoreFabric SN1100E 16Gb Single Port Fibre Channel Host Bus Adapter	C8R38A
	HP StoreFabric SN1100E 16Gb Dual Port Fibre Channel Host Bus Adapter	C8R39A
	QLogic Fibre Channel HBAs	
	HP 81Q 8Gb 1-port PCIe Fibre Channel Host Bus Adapter	AK344A
	HP 82Q 8Gb 2-port PCIe Fibre Channel Host Bus Adapter	AJ764A
	HP StoreFabric SN1000Q 16GB 1-port PCIe Fibre Channel Host Bus Adapter	QW971A
	HP StoreFabric SN1000Q 16GB 2-port PCIe Fibre Channel Host Bus Adapter	QW972A
	Converged Network Adapter	
	HP StoreFabric CN1200E 10Gb Converged Network Adapter	E7Y06A
	HP CN1100E Dual Port Converged Network Adapter	BK835A
	HP CN1000Q Dual Port Converged Network Adapter	BS668A
	HP StoreFabric CN1100R Dual Port Converged Network Adapter	QW990A
HP Uninterruptible Power Systems	**HP DirectFlow Three Phase UPS**	
	Power Unit (1U UPS)	
	NOTE: #0D1 will appear after the part number on the sales order if HP factory integration is indicated.	
	HP R12000 DirectFlow - 1U Rackmount Uninterruptible Power System	G9Y75A
	HP R12000 DirectFlow - POD 1U Rackmount Uninterruptible Power System	AF478A
	Input/Output Module Options for 1U UPS	
	NOTE: Choose one I/O Module per UPS. **NOTE**: #0D1 will appear after the part number on the sales order if HP factory integration is indicated.	
	HP 30A 400-415 Volt Three Phase NA R10000 DirectFlow UPS IEC309 Input/Output Module	AF489A
	HP 30A 480 Volt Three Phase NA R12000 DirectFlow UPS L22-30 Input/Output Module	AF491A
	HP 30A 480 Volt Three Phase NA R12000 DirectFlow UPS IEC309 Input/Output Module	AF492A
	HP 30A 400-415 Volt Three Phase NA R12000 DirectFlow UPS IEC309 Input/Output Module	G9Y76A
	HP Tower UPS **HP T750 G4 UPS Models**	
	HP T750 G4 NA/JP Uninterruptible Power System	J2P85A
	HP T1000 G4 UPS Models	
	HP T1000 G4 NA/JP Uninterruptible Power System	J2P86A
	HP T1500 G4 UPS Models	
	HP T1500 G4 NA/JP Uninterruptible Power System	J2P87A

Additional Options

	HP Rack/Tower UPS	
	HP R/T2200 G4 UPS Models	
	HP R/T2200 G4 NA/JP Uninterruptible Power System	J2R00A
	HP R/T3000 G4 UPS Models	
	HP R/T3000 G4 Low Voltage NA/JP Uninterruptible Power System	J2R01A
	HP R/T3000 G4 High Voltage NA/JP Uninterruptible Power System	J2R02A
	HP Rack-mountable UPS	
	HP R1500 G4 Uninterruptible Power Supply (UPS)	
	HP R1500 G4 NA Uninterruptible Power System	J2Q99A
	R5000 Uninterruptible Power System (UPS)	
	HP R5000 3U L630 High Voltage NA/JP Uninterruptible Power System **NOTE:** Please see the QuickSpecs for additional information: http://h18000.www1.hp.com/products/quickspecs/14109_na/14109_na.html	AF460A
	R7000 Uninterruptible Power System (UPS)	
	HP R7000 4U 50A High Voltage NA/JP Uninterruptible Power System	AF462A
	NOTE: Please see the QuickSpecs for additional information: http://h18000.www1.hp.com/products/quickspecs/14110_na/14110_na.html	
	NOTE: For additional information on HP Uninterruptible Power Systems please go to: http://www.hp.com/servers/rackups. **NOTE:** Please see the UPS and PDU cable matrix's on the HP Power Protection and Management page. Under Power Cords, click on the "HP Power Cord Matrix" link. That link will list cable descriptions, requirements, and specifications for UPS and PDU units. Please see the following link: http://www.hp.com/products/powercords.	
HP Basic Power Distribution Units (bPDU)	**HP Basic Power Distribution Unit: 1U/0U Version**	
	HP 1.9kVA 120 Volt L5-20 Input (12xNEMA 5-20R) NA/JP Basic PDU	H5M54A
	HP 3.6kVA 200-240 Volt Detachable C20 Input (12xC13) WW Basic PDU	H5M56A
	HP Basic Power Distribution Unit: Half Height Version	
	HP 2.8kVA 120 Volt L5-30 Input (18xNEMA 5-20R) NA/JP Basic PDU	H5M55A
	HP 3.6kVA 200-240 Volt Detachable C20 Input (18xC13) WW Basic PDU	H5M57A
	HP 4.9kVA 208 Volt L6-30 Input (20xC13) NA/JP Basic PDU	H5M58A
	HP 7.3kVA 230 Volt IEC309 32A Input (20xC13) INTL Basic PDU	H5M68A
	HP 8.6kVA 208 Volt L15-30 3-Phase Input (18xC13) NA/JP Basic PDU	H5M61A
	HP Basic Power Distribution Unit: Mid Height Version	
	HP 4.9kVA 208 Volt L6-30 Input (24xC13/6xC19) NA/JP Basic PDU	H5M59A
	HP 7.3kVA 230 Volt IEC309 32A Input (24xC13/6xC19) INTL Basic PDU	H5M70A
	HP 8.3kVA 208 Volt CS8265C Input (30xC13/6xC19) NA/JP Basic PDU	H5M60A
	HP 11kVA 230 Volt IEC309 63A Input (30xC13/6xC19) INTL Basic PDU	H5M71A
	HP Hardwired 200-240 Volt Input (30xC13/6xC19) WW Basic PDU	H5M75A
	HP 5.7kVA 208 Volt L21-20 3-Phase Input (24xC13/3xNEMA 5-20R) NA/JP Basic PDU	H5M63A
	HP 8.6kVA 208 Volt L21-30 3-Phase Input (24xC13/3xC19/3xNEMA 5-20R) NA/JP Basic PDU	H5M64A
	HP 8.6kVA 208 Volt L15-30 3-Phase Input (24xC13/6xC19) NA/JP Basic PDU	H5M62A
	HP 11kVA 400 Volt IEC309 16A 3-Phase Input (30xC13/6xC19) INTL Basic PDU	H5M72A
	HP Basic Power Distribution Unit: Full Height Version	
	HP 11kVA 400 Volt IEC309 16A 3-Phase Input (36xC13/6xC19) INTL Basic PDU	H5M73A

Additional Options

	HP 11kVA 400 Volt IEC309 30A 3-Phase Input (36xC13/6xC19) NA Basic PDU	H5M67A
	HP Basic Power Distribution Unit: 480/277 Volt Version	
	HP 19.9kVA 480 Volt IEC309 30A 3-Phase Input (30 Outlet) NA Basic PDU	H3X08A
	HP 277 Volt options for H3X08A	
	HP 800VA - 277V Input / 230V Output NA Rack Mount Transformer	H3X09A
	NOTE: Please see the QuickSpecs for Technical Specifications and additional information: http://h18000.www1.hp.com/products/quickspecs/14557_na/14557_na.html (Worldwide)	
	NOTE: Additional HP Power Distribution Units are available. For a complete list of all HP PDUs and additional information please visit http://www.hp.com/go/rackandpower.	
HP Remote Monitored Power Distribution Units (mPDU)	**HP Remote Monitored Power Distribution Unit: 1U Version**	
	HP 2.8kVA 120 Volt L5-30 Input (12xNEMA 5-20R)NA/JP Monitored PDU	D9N43A
	HP 3.6kVA 200-240 Volt Detachable C20 Input (12xC13) WW Monitored PDU	D9N46A
	HP 4.9kVA 208 Volt L6-30 Input (12xC13) NA/JP Monitored PDU	D9N44A
	HP Remote Monitored Power Distribution Unit: Half Height Version	
	HP 3.6kVA 200-240 Volt Detachable C20 Input (16xC13) WW Monitored PDU	D9N45A
	HP 4.9kVA 208 Volt L6-30 Input (12xC13) NA/JP Monitored PDU	G9Z05A
	HP 7.3kVA 230 Volt IEC309 32A Input (12xC13) INTL Monitored PDU	G9Z06A
	HP Remote Monitored Power Distribution Unit: Mid Height Version	
	HP 4.9kVA 208 Volt L6-30 Input (20xC13/4xC19) NA/JP Monitored PDU	D9N47A
	HP 7.3kVA 230 Volt IEC309 32A Input (20xC13/4xC19) INTL Monitored PDU	D9N48A
	HP 8.6kVA 208 Volt L15-30 3-Phase Input (18xC13/3xC19) NA/JP Monitored PDU	D9N51A
	HP 5.7kVA 208 Volt L21-20 3-Phase Input (18xC13/3xNEMA 5-20R) NA/JP Monitored PDU	D9N52A
	HP 8.6kVA 208 Volt L21-30 3-Phase Input (20xC13/3xC19/3xNEMA 5-20R) NA/JP Monitored PDU	D9N53A
	HP 11kVA 400 Volt IEC309 16A 3-Phase Input (18xC13/3xC19) INTL Monitored PDU	D9N55A
	HP Remote Monitored Power Distribution Unit: Full Height Version	
	HP 8.3kVA 208 Volt CS8265C Input (30xC13/3xC19) NA Monitored PDU	D9N49A
	HP 7.3kVA 230 Volt IEC309 32A Input (32xC13/4xC19) INTL Monitored PDU	D9N50A
	HP 11kVA 400 Volt IEC309 16A 3-Phase Input (30xC13/3xC19) INTL Monitored PDU	D9N57A
	HP 14.4kVA 208 Volt CS8365C 3-Phase Input (12xC13/12xC19)NA Monitored PDU	D9N58A
	HP 16.6kVA 400 Volt IEC309 30A 3-Phase Input (30xC13/3xC19) NA Monitored PDU	D9N61A
	HP 16.6kVA 400 Volt IEC309 30A 3-Phase Input (12xC13/12xC19) NA Monitored PDU	D9N62A
	HP 17.3kVA 208 Volt IEC309 60A 3-Phase Input (24xC13/3xC19) NA/JP Monitored PDU	D9N54A
	HP 17.3kVA 208 Volt IEC309 60A 3-Phase Input (12xC13/12xC19) NA/JP Monitored PDU	D9N59A
	HP 17.3kVA 208 Volt IEC309 60A 3-Phase Watertight Input (12xC13/12xC19) NA/JP Monitored PDU	G9Z07A
	HP 19.9kVA 480 Volt 3-Phase (30 Outlet) NA Monitored PDU	D9N63A
	HP 22kVA 400 Volt IEC309 32A 3-Phase Input (30xC13/3xC19) INTL Monitored PDU	D9N56A
	HP 22kVA 400 Volt IEC309 32A 3-Phase Input (12xC13/12xC19) INTL Monitored PDU	D9N60A
	HP 22kVA 400 Volt IEC309 32A 3-Phase Watertight Input (12xC13/12xC19) INTL	G9Z08A

Additional Options

	Monitored PDU	
	HP Environmental Sensor for Remote Monitored PDUs	
	HP Environmental Sensor for Remote Monitored and Managed PDUs	E2D53A
	NOTE: Please see the QuickSpecs for additional information: http://h18000.www1.hp.com/products/quickspecs/14669_na/14669_na.html (Worldwide)	
HP Intelligent Power Distribution Units (iPDU)	**iPDU Core Units**	
	HP 4.9kVA 24A Single Phase NA/JP Core Intelligent Modular Power Distribution Unit	AF520A
	HP 8.3kVA 40A Single Phase NA/JP Core Intelligent Modular Power Distribution Unit	AF521A
	HP 8.6kVA 24A Three Phase NA/JP Core Intelligent Modular Power Distribution Unit	AF522A
	HP 14.4kVA 40A Three Phase NA/JP Intelligent Modular Power Distribution Unit	AF533A
	HP 17.3kVA 48A Three Phase NA/JP Core Intelligent Modular Power Distribution Unit	AF523A
	HP 7.3kVA 32A Single Phase INTL Core Intelligent Modular Power Distribution Unit	AF525A
	HP 11kVA 16A Three Phase INTL Core Intelligent Modular Power Distribution Unit	AF526A
	HP 22kVA 32A Three Phase INTL Core Intelligent Modular Power Distribution Unit	AF527A
	HP 17.3kVA 48A 208V Three Phase 12 Outlet Core NA/JP Intelligent Power Distribution Unit	AF535A
	HP 17.3kVA 24A 415V Three Phase 12 Outlet Core NA/JP Intelligent Power Distribution Unit	AF537A
	HP 22kVA 32A 400V Three Phase 12 Outlet Core INTL Intelligent Power Distribution Unit	AF538A
	iPDU Kits with Standard Extension Bars	
	HP 4.9kVA 24A Single Phase NA/JP Intelligent Modular Power Distribution Kit	AF531A
	HP 8.6kVA 24A Three Phase NA/JP Intelligent Modular Power Distribution Kit	AF532A
	HP 7.3kVA 32A Single Phase INTL Intelligent Modular Power Distribution Kit	AF534A
	iPDU Extension Bars	
	HP 5xC13 Intelligent PDU Extension Bar G2 Kit	AF547A
	HP 5xC13 Outlets Power and UID LEDs Pair Standard Extension Bar	AF528A
	NOTE: Please see the QuickSpecs for Technical Specifications and additional information: http://h18000.www1.hp.com/products/quickspecs/13650_na/13650_na.html (Worldwide) **NOTE:** Additional HP Power Distribution Units are available. For a complete list of all HP PDUs and additional information please visit: http://www.hp.com/go/rackandpower.	
HP Managed Power Distribution Units (maPDU)	**Half Height Models**	
	HP 3.6kVA 200-240 Volt Detachable C20 Input (7xC13/1xC19) WW Managed PDU	H8B49A
	Full Height Models	
	HP 2.8kVA 120 Volt L5-30 Input (24x NEMA 5-20) NA/JP Managed PDU	H8B48A
	HP 4.9kVA 208 Volt L6-30 Input (20xC13/4xC19) NA/JP Managed PDU	H8B50A
	HP 7.3kVA 200-240 Volt IEC309 32A Input (20xC13/4xC19) INTL Managed PDU	H8B51A
	HP 8.6kVA 208 Volt L15-30 3 Phase Input (18xC13/6xC19) NA/JP Managed PDU	H8B52A
	HP 8.6kVA 208 Volt L21-30 3 Phase Input (20xC13/3xC19/1x NEMA 5-20) NA/JP Managed PDU	H8B53A
HP Rack Series	**HP Intelligent Series Rack**	

Additional Options

	HP 36U 600mm x 1075mm Enterprise Pallet Rack	BW895A
	HP 36U 600mm x 1075mm Enterprise Shock Rack	BW896A
	HP 42U 600mm x 1075mm Enterprise Pallet Rack	BW903A
	HP 42U 600mm x 1075mm Enterprise Shock Rack	BW904A
	HP 47U 600mm x 1075mm Enterprise Pallet Rack	BW911A
	HP 47U 600mm x 1075mm Enterprise Shock Rack	BW912A
	NOTE: Please see the QuickSpecs for Technical Specifications such as height, width, depth, weight, and color: http://h18000.www1.hp.com/products/quickspecs/14223_na/14223_na.html	
	NOTE: For additional information regarding HP Rack Cabinets, please see the following URL: http://www.hp.com/go/rackandpower.	
HP Rack Options	**HP LCD8500 1U Rackmount Console Kit Models**	
	HP LCD8500 1U US Rackmount Console Kit	AF630A
	HP LCD8500 1U US TAA Rackmount Console Kit	AF645A
	HP LCD8500 1U Rackmount Console Kit Options	
	HP Kit LCD 1.83m Latch Display Port Cable	G7T29A
	HP Location Discovery Services LCD8500 Kit	TL052A
	HP Rack LED Light Kit	BW939A
	HP Location Discovery Services	
	HP 36U Location Discovery Kit	BW945A
	HP 42U Location Discovery Kit	BW946A
	HP 47U Location Discovery Kit	BW947A
	NOTE: Please see the QuickSpecs for Technical Specifications and additional information: http://h18000.www1.hp.com/products/quickspecs/14429_na/14429_na.html	
	HP Server Console Switches	
	HP 0x1x8 G3 KVM Console Switch	AF651A
	HP 0x2x16 G3 KVM Console Switch	AF652A
	HP TAA 0x2x16 G3 KVM Console Switch	AF653A
	HP USB Remote Access Key for G3 KVM Console Switches	AF650A
	NOTE: Please see the QuickSpecs for Technical Specifications and additional information: http://h18000.www1.hp.com/products/quickspecs/11834_na/11834_na.html	
	HP Server Console Switch G2 with Virtual Media & CAC	
	HP 0x2x16 KVM Server Console Switch G2 with Virtual Media CAC Software	AF618A
	HP 0x2x32 KVM Server Console Switch G2 with Virtual Media CAC Software	AF619A
	KVM USB Cnsl Itfc Adapter 1PK ALL	336047-B21
	NOTE: Please see the QuickSpecs for Technical Specifications and additional information: http://h18000.www1.hp.com/products/quickspecs/13475_na/13475_na.html	
	HP IP Console Switch G2 with Virtual Media & CAC	
	HP 1x4 USB/PS2 KVM Console Switch	AF611A
	HP 1x1Ex8 KVM IP Console Switch G2 with Virtual Media CAC Software	AF620A
	HP 2x1Ex16 KVM IP Console Switch G2 with Virtual Media CAC Software	AF621A
	HP 4x1Ex32 KVM IP Console Switch G2 with Virtual Media CAC Software	AF622A
	NOTE: Please see the QuickSpecs for Technical Specifications and additional	

Additional Options

	information: http://h18000.www1.hp.com/products/quickspecs/13474_na/13474_na.html (Worldwide)	
	Rail Kits	
	NOTE: Gen8 rail kits have changed significantly from prior generation rail kits. Please take a moment to review the installation documentation that comes with the server to help you with the installation of your Gen8 server. **NOTE:** Rail kits are optional for DL380p Gen8 and are no longer included standard with the server. Customers have the option to purchase their server without a rail kit. **NOTE:** Ball bearing and Easy Install rail kits contain telescoping rails which allow for in-rack serviceability. **NOTE:** The HP 2U Gen8 Cable Management Arm is not available when using Friction Rails. **NOTE:** To assist in the installation of the server into the rack an optional installation tool is available by contacting your local services representative (p/n 695539-001). **Caution:** HP recommends that a minimum of two people are required for all Rack Server installations. Please refer to your installation instructions for proper tools and number of people to use for any installation.	
	HP 2U Large Form Factor Ball Bearing Gen8 Rail Kit with CMA	663480-B21
	HP 2U Small Form Factor Ball Bearing Gen8 Rail Kit with CMA	663478-B21
	HP 2U Small Form Factor Ball Bearing Rail Kit	720863-B21
	HP 2U Large Form Factor Ball Bearing Rail Kit	720864-B21
	HP 2U Cable Management Arm for Ball Bearing Rail Kit	720865-B21
	HP 2U Small Form Factor Easy Install Rail Kit	733660-B21
	HP 2U Large Form Factor Easy Install Rail Kit	733662-B21
	HP 2U Cable Management Arm for Easy Install Rail Kit	733664-B21
	HP 2U Small Form Factor Easy Install Rail Kit with CMA	733668-B21
	HP 2U Large Form Factor Easy Install Rail Kit with CMA	733670-B21
HP USB and SD options	**HP Flash Media Kits for USB Drives**	
	NOTE: HP qualified blank USB key for use with HP ProLiant servers that support the VMware virtualization environment and other HP value-add software. HP recommends this industry standard USB flash device for use with VMware ESXi. USB device must be installed in the internal slot of the ProLiant server for use with VMware ESXi. Refer to HP VMware Getting Started Guide for installation instructions.	
	HP 8GB USB Enterprise Mainstream Flash Media Drive Key Kit	737953-B21
	HP Enterprise Mainstream Flash Media Kits for Memory Cards	
	HP 8GB SD Enterprise Mainstream Flash Media Kit	726113-B21
	HP 32GB SD Enterprise Mainstream Flash Media Kit	700136-B21
	NOTE: Please see the QuickSpecs for Technical Specifications and additional information: http://h18000.www1.hp.com/products/quickspecs/13971_na/13971_na.html	
HP Care Pack Services	**Proactive Care**	
	NOTE: Collaborative Support plus Proactive services delivered by the onshore, local language Advanced Solution Center (ASC), end-to-end case ownership from a Technical Solution Specialists and Technical Account Manager who remotely delivers firmware/software revision management, proactive scans and incident trend reports. Recommended for customers running a virtualized infrastructure and/or customers who desire an enhanced call support experience.	

Additional Options

HP 3 year 4 hour 24x7 ProLiant DL38x(p) Proactive Care Service	U2Z50E
HP 3 year 4 hour 24x7 with Defective Media Retention ProLiant DL38x(p) Proactive Care Service	U2Z53E
HP 3 year 6 hour Call To Repair 24x7 ProLiant DL38x(p) Proactive Care Service	U2Z56E
HP 3 year 6 hour Call To Repair 24x7 w/DefectiveMedia Retention ProLiant DL38x(p) Proactive Care SVC	U2Z59E
HP 3 year 4 hour 24x7 ProLiant DL38x(p) with Insight Control Proactive Care Service	U3N23E
HP 3 year 4hr 24x7 with Defective Media Retention DL38x(p) with Insight Control Proactive Care SVC	U3N26E
HP 3 year 6 hour Call To Repair 24x7 ProLiant DL38x(p) with Insight Control Proactive Care Service	U3N29E
HP 3yr 6hrCallToRepair 24x7w/Defective Media Retention DL38x(p) w/Insight Control Proactive Care SVC	U3N32E
HP 3 year 4-Hour 24x7 with Comprehensive Defective MaterialRetention DL38x(p) ProactiveCare Service	U9B55E
HP 3year 24x7 6-HourCall-to-repair ComprehensiveDefectiveMaterialRetention DL38x(p) ProactiveCareSVC	U9B58E
HP 3year 4-Hour 24x7 w/Comprehensive Defective MaterialRetention DL38x(p) w/IC ProactiveCare Service	U9B73E
HP 3year 24x7 6-H Call-to-repairComprehensiveDefectiveMaterialRetention DL38x(p)wIC ProactiveCareSVC	U9B76E
Installation Services	
NOTE: Reduce the time required to get your system up and running and help minimize disruptions to your business.	
HP Install ProLiant DL38x(p) Service	U4554E
HP Startup ProLiant DL38x(p) Service	U4555E
NOTE: For more information, customer/resellers can contact: http://www.hp.com/services/carepack	

Memory

HP SmartMemory

New HP SmartMemory now provides additional protection for your servers. With HP Authentication it can verify that you have true HP Qualified Memory in your HP ProLiant Gen8 server. With HP SmartMemory your new HP ProLiant server can take advantage of additional Gen8 enhancements in performance, durability and future manageability support through HP Active Health System

For detailed memory configuration rules and guidelines, please use the Online DDR3 Memory Configuration Tool:
http://www.hp.com/go/ddr3memory-configurator

Memory Subsystem Architecture
Each Intel® Xeon® E5-2600 or E5-2600 v2 family processor socket contains four memory channels that support three DIMMs each for a total of twelve (12) DIMMs per installed processor or a grand total of Twenty Four (24) DIMMs for the server. Up to 32GB capacity DIMMs are supported for 768GB of max memory (for Best Speed (1600MHz) run 2 DIMMs per channel or 16 DIMM slots x 16GB per DIMM = 256GB).

Memory population guidelines

DIMM configuration

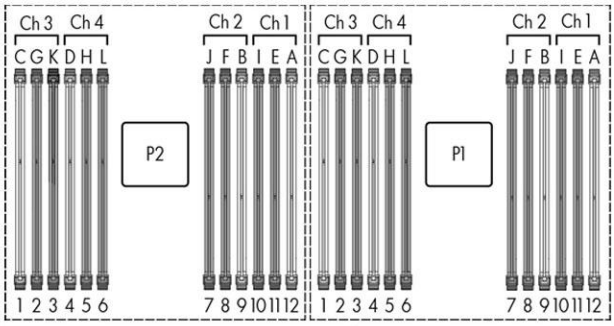

NOTE: This information is only for Advanced EEC memory mode.See the user guide for other memory modes.
Key: Alpha - population order
Numeric - DIMM slot ID for spare replacement
1. Before installing DIMMs, review the population rules:
   - Do not install DIMMs if the corresponding processor is not installed.
   - When two processors are installed, balance the DIMMs across the two processors
   - DIMM slots that are white denote the first slot of a channel (Ch 1-A, Ch 2-B, Ch 3-C, Ch 4-D...).
   - Do not mix UDIMMs, RDIMMs, or LRDIMMs.
   - Do not install more than two UDIMMs per channel. UDIMMs should be installed in slots Ch 1-I, Ch 2-J, Ch 3-K, Ch 4-L.
2. When two processors are installed, install DIMMs in dequential alphabetical order balanced between the two processors: P1-A, P2-A, P1-B, P2-B, P1-C, P2-C...
3. For DIMM spare replacement, install the DIMMs per slot number as instructed by your system software.

For additional DIMM information, see the user guide at: **hp.com > support & drivers > product support & troubleshooting > enter your product**

General Memory Population Rules and Guidelines:

- White DIMM slots denote the first slot of a channel. For 1 DPC (DIMM per channel) populate white slots only.
- A minimum of one DIMM is required per server.
- Install DIMMs only if the corresponding processor is installed.
- If only one processor is installed in a two processor system, only half of the DIMM slots are available.
- To maximize performance, it is recommended to balance the total memory capacity between all installed processors and to load the channels similarly whenever possible.
- When two processors are installed, balance the DIMMs across the two processors.
- Populate DIMMs from heaviest load (quad-rank) to lightest load (single-rank) within a channel. Heaviest load (DIMM with most ranks) within a channel goes furthest from the processor.
- RDIMMs operating at either 1.35V or 1.5V may be mixed in any order, but the system will power them at the higher voltage.
- Do not mix RDIMMs, LRDIMMs, and UDIMMs.
- LRDIMMs are supported up to 3 DIMMs per channel.
- Using the HP RBSU, 1.35V DIMMs can be changed to operate at 1.5V.
- DIMMs of different speeds may be mixed in any order; the server will select a common optimal speed.
- The maximum memory speed is a function of the memory type, memory configuration, and processor model.
- The maximum memory capacity is a function of the memory type and number of installed processors.
- HP memory from previous generation servers is not qualified on the DL380p Gen8 Server. Certain HP SmartMemory features such as memory authentication and enhanced performance may not be supported.
- To realize the performance memory capabilities listed in this document, HP SmartMemory is required. For additional information, please see the HP SmartMemory QuickSpecs at: http://h18000.www1.hp.com/products/quickspecs/14225_na/14225_na.html.

Memory

- For memory population rules and additional memory guidelines, please see the DL380p Gen8 user guide at http://www.hp.com/support.

Supported Memory Bandwidth for DL380p Gen8 with Intel® Xeon® E5-2600 v2 Series Processor Family															
DIMM Type ->	Register DIMM								Load Reduced (LRDIMMs)	Unbuffered DIMM					
DIMM Rank ->	Single Rank (1R)		Dual Rank (2R)	Dual Rank (2R)	Single Rank (1R)	Single Rank (1R)	Dual Rank (2R)	Dual Rank (2R)	Quad Rank (4R)	Single Rank (1R)		Dual Rank (2R)			
DIMM Capacity ->	4GB	4GB	8GB	8GB	8GB	8GB	16GB	16GB	32GB	2GB	2GB	4GB	4GB	8GB	8GB
DIMM Native Speed (MT/s) ->	1600	1866	1600	1866	1600	1866	1600	1866	1866	1600	1866	1600	1866	1600	1866
Voltage	LV	Std	LV	Std	LV	Std	LV	Std	Std	LV	Std	LV	Std	LV	Std
SLOTS THAT CAN BE POPULATED															
12 slot servers	12	12	12	12	12	12	12	12	12	12	12	12	12	12	12
16 slot servers	16	16	16	16	16	16	16	16	16	16	16	16	16	16	16
24 slot servers	24	24	24	24	24	24	24	24	24	16	16	16	16	16	16
MAXIMUM CAPACITY (GB)*															
12 slot servers	48	48	96	96	96	96	192	192	384	24	24	48	48	96	96
16 slot servers	64	64	128	128	128	128	256	256	512	32	32	64	64	128	128
24 slot servers	96	96	192	192	192	192	384	384	768	32	32	64	64	128	128
POPULATED DIMM SPEED (MT/s)															
1 DIMM/ Channel	1600	1866	1600	1866	1600	1866	1600	1866	1866	1600	1866	1600	1866	1600	1866
2 DIMM/ Channel	1600	1866	1600	1866	1600	1866	1600	1866	1866	1600	1866	1600	1866	1600	1866
3 DIMM/ Channel	800	1333	800	1333	800	1333	800	1333	1333	n/a	n/a	n/a	n/a	n/a	n/a
Memory speed is a function of the processor QPI bus speed. * Maximum capacity will vary based on individual server platform qualification schedule For HP SmartMemory, UDIMM is supported at 2DPC@DDR3-1866. Third party memory may only support up to 2DPC@DDR3-1333 or 1600. # All configurations on 64 slot server run at DDR3-1066.															

Memory Speed by E5-2600 v2 Processor Model	
Processor Models	Supported Memory Speeds

Memory

E5-2697 v2, E5-2695 v2, E5-2690 v2, E5-2680 v2, E5-2670 v2, E5-2667 v2, E5-2660 v2, E5-2650 v2, E5-2643 v2, E5-2637 v2	1866/1600MHz
E5-2640 v2, E5-2630 v2, E5-2620 v2, E5-2650L v2, E5-2630L v2	1600MHz
E5-2609 v2, E5-2603 v2	1333MHz

Supported Memory Bandwidth for DL380p Gen8 with Intel® Xeon® E5-2600 Series Processor Family														
DIMM Type	**Registered DIMMS (RDIMMs)**							**Load Reduced (LRDIMMs**	**Unbuffered with ECC DIMMs (UDIMMs)**					
DIMM Rank	**Single Rank (1R)**			**Dual Rank (2R)**				**Quad Rank (4R)**	**Single Rank (1R)**		**Dual Rank (2R)**			
DIMM Capacity	4GB	4GB	8GB	8GB	8GB	16GB	16GB	32GB	2GB	2GB	4GB	4GB	8GB	8GB
DIMM Native Speed (MHz)	1333	1600	1600	1333	1600	1333	1600	1333	1333	1600	1333	1600	1333	1600
Voltage	LV	Std	Std	LV	Std	LV	Std	LV	LV	Std	LV	Std	LV	Std
SLOTS THAT CAN BE POPULATED														
24 slot servers	24	24	24	24	24	24	24	24	16	16	16	16	16	16
MAXIMUM CAPACITY (GB)*														
	96	96	192	192	192	384	384	768	32	32	64	64	128	128
POPULATED DIMM SPEED (MHz)														
1 DIMM Per Channel	1333	1600	1600	1333	1600	1333	1600	1333***	1333	1600	1333	1600	1333	1600
2 DIMM Per Channel	1333	1600	1600	1333	1600	1333	1600	1333***	1333****	1600	1333****	1600	1333****	1600
3 DIMM Per Channel	1066**	1333##	1333##	1066**	1333##	1066**	1333##	1066	n/a	n/a	n/a	n/a	n/a	n/a

NOTE: Memory speed is a function of the processor QPI bus speed. To realize the performance memory capabilities listed above HP SmartMemory is required.
* Maximum capacity will vary based on individual server platform qualification schedule
** For HP SmartMemory RDIMM supports up to 3DPC@1066 at 1.35V. Third party memory may only support up to 3DPC@1066 at 1.5V.
*** LRDIMMs enable 3 DIMMs per channel. HP SmartMemory will support up to 3DPC@1066 at 1.35V. Third party memory may only support 3DPC @1066 at 1.5V.
**** For HP SmartMemory, UDIMM is supported at 2DPC@1333 at 1.35V. Third party memory may only support up to 2DPC@1066 at 1.5V.
RBSU setting required

Memory Speed by E5-2600 Processor Model

Processor Models	Supported Memory Speeds
E5-2690 E5-2680, E5-2670, E5-2667, E5-2665, E5-2660, E5-2650, E5-2650L, E5-2643, E5-2637	1600/1333/1066MHz
E5-2640, E5-2630, E5-2630L, E5-2620	1333/1066MHz
E5-2609, E5-2603	1066MHz

DIMM slot and configuration diagram

Memory

Population order; start with "A" first, "B" second, "C" third, etc.
When one processor is installed, install DIMMs in sequential alphabetic order: A, B, C, D, E, F ...
When two processors are installed, install DIMMs in sequential
alphabetic order: CPU1-A, CPU2-A,CPU1-B,CPU2-B,CPU1-C, CP2-C

24 DIMM SLOTS (12 per CPU node)					
	slot #	population order	slot #	population order	
Chnl 3	1	C	1	C	Chnl 3
	2	G	2	G	
	3	K	3	K	
Chnl 4	4	D	4	D	Chnl 4
	5	H	5	H	
	6	L	6	L	
CPU1			**CPU2**		
Chnl 2	7	J	7	J	Chnl 2
	8	F	8	F	
	9	B	9	B	
Chnl 1	10	I	10	I	Chnl 1
	11	E	11	E	
	12	A	12	A	

NOTE: Capacity references are rounded to the common Gigabyte values.

- 1GB = 1024MB
- 2GB = 2048MB
- 4GB = 4096MB
- 8GB = 8192MB
- 16GB = 16384MB
- 32GB = 32768MB

DDR3 memory options part number decoder

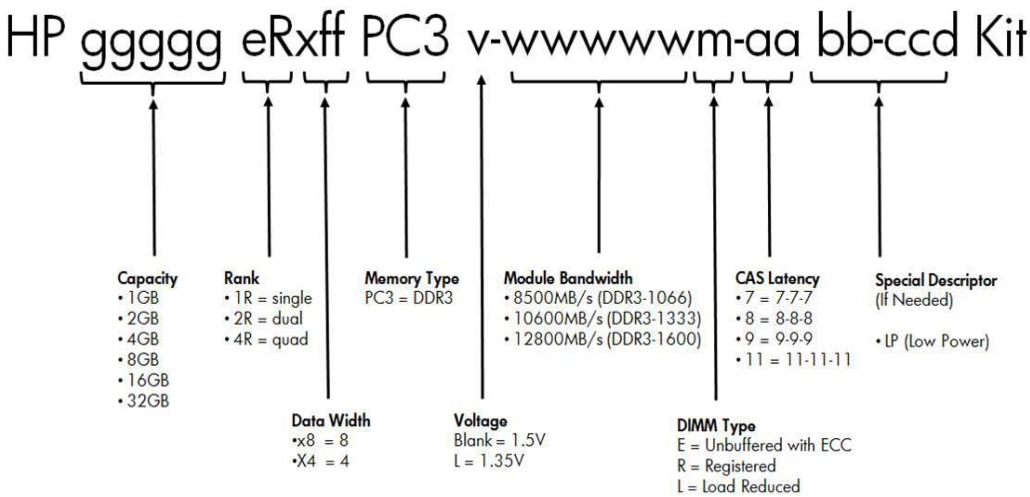

Following are memory options available from HP:

HP Memory **NOTE:** HP memory from previous generation servers are not qualified or warranted with this HP ProLiant Server. HP SmartMemory is required to realize the memory

performance improvements and enhanced functionality listed in this document for Gen8. For additional information, please see the HP SmartMemory QuickSpecs at: http://h18000.www1.hp.com/products/quickspecs/14225_na/14225_na.html
NOTE: LRDIMM, RDIMM and UDIMMs are all distinct memory technologies and cannot be mixed within a server. The majority of ProLiant Gen8 servers support RDIMM, UDIMM and LRDIMM.

Registered DIMMs (RDIMMs)
NOTE: The following memory is supported by the E5-2600 v2 series Processors.

HP 4GB (1x4GB) Single Rank x4 PC3L-12800R (DDR3-1600) Registered CAS-11 Low Voltage Memory Kit	713981-B21
HP 4GB (1x4GB) Single Rank x4 PC3-14900R (DDR3-1866) Registered CAS-13 Memory Kit	708637-B21
HP 8GB (1x8GB) Dual Rank x4 PC3L-12800R (DDR3-1600) Registered CAS-11 Low Voltage Memory Kit	713983-B21
HP 8GB (1x8GB) Single Rank x4 PC3L-12800R (DDR3-1600) Registered CAS-11 Low Voltage Memory Kit	731765-B21
HP 8GB (1x8GB) Dual Rank x4 PC3-14900R (DDR3-1866) Registered CAS-13 Memory Kit	708639-B21
HP 8GB (1x8GB) Single Rank x4 PC3-14900R (DDR3-1866) Registered CAS-13 Memory Kit	731761-B21
HP 16GB (1x16GB) Dual Rank x4 PC3L-12800R (DDR3-1600) Registered CAS-11 Low Voltage Memory Kit	713985-B21
HP 16GB (1x16GB) Dual Rank x4 PC3-14900R (DDR3-1866) Registered CAS-13 Memory Kit	708641-B21

Registered DIMMs (RDIMMs)
NOTE: The following memory is supported by the E5-2600 series Processors.

HP 4GB (1x4GB) Single Rank x4 PC3L-10600R (DDR3-1333) Registered CAS-9 Low Voltage Memory Kit	647893-B21
HP 4GB (1x4GB) Single Rank x4 PC3-12800R (DDR3-1600) Registered CAS-11 Memory Kit	647895-B21
HP 8GB (1x8GB) Dual Rank x4 PC3L-10600R (DDR3-1333) Registered CAS-9 Low Voltage Memory Kit	647897-B21
HP 8GB (1x8GB) Single Rank x4 PC3-12800R (DDR3-1600) Registered CAS-11 Memory Kit	647899-B21
HP 8GB (1x8GB) Dual Rank x4 PC3-12800R (DDR3-1600) Registered CAS-11 Memory Kit	690802-B21
HP 16GB (1x16GB) Dual Rank x4 PC3L-10600R (DDR3-1333) Registered CAS-9 Low Voltage Memory Kit	647901-B21
HP 16GB (1x16GB) Dual Rank x4 PC3-12800R (DDR3-1600) Registered CAS-11 Memory Kit	672631-B21

Unbuffered with ECC DIMMs (UDIMMs)
NOTE: The following memory is supported by the E5-2600 v2 series Processors.

HP 2GB (1x2GB) Single Rank x8 PC3L-12800E (DDR3-1600) Unbuffered CAS-11 Low Voltage Memory Kit	713975-B21
HP 2GB (1x2GB) Single Rank x8 PC3-14900E (DDR3-1866) Unbuffered CAS-13 Memory Kit	708631-B21
HP 4GB (1x4GB) Dual Rank x8 PC3L-12800E (DDR3-1600) Unbuffered CAS-11 Low Voltage Memory Kit	713977-B21
HP 4GB (1x4GB) Dual Rank x8 PC3-14900E (DDR3-1866) Unbuffered CAS-13 Memory Kit	708633-B21

Memory

HP 8GB (1x8GB) Dual Rank x8 PC3L-12800E (DDR3-1600) Unbuffered CAS-11 Low Voltage Memory Kit	713979-B21
HP 8GB (1x8GB) Dual Rank x8 PC3-14900E (DDR3-1866) Unbuffered CAS-13 Memory Kit	708635-B21
Unbuffered with ECC DIMMs (UDIMMs) **NOTE:** The following memory is supported by the E5-2600 series Processors.	
HP 2GB (1x2GB) Single Rank x8 PC3-12800E (DDR3-1600) Unbuffered CAS-11 Memory Kit	669320-B21
HP 2GB (1x2GB) Single Rank x8 PC3L-10600E (DDR3-1333) Unbuffered CAS-9 Low Voltage Memory Kit	647905-B21
HP 4GB (1x4GB) Dual Rank x8 PC3-12800E (DDR3-1600) Unbuffered CAS-11 Memory Kit	669322-B21
HP 4GB (1x4GB) Dual Rank x8 PC3L-10600E (DDR3-1333) Unbuffered CAS-9 Low Voltage Memory Kit	647907-B21
HP 8GB (1x8GB) Dual Rank x8 PC3-12800E (DDR3-1600) Unbuffered CAS-11 Memory Kit	669324-B21
HP 8GB (1x8GB) Dual Rank x8 PC3L-10600E (DDR3-1333) Unbuffered CAS-9 Low Voltage Memory Kit	647909-B21
Load Reduced DIMMs (LRDIMMs) **NOTE:** The following memory is supported by the E5-2600 v2 series Processors.	
HP 32GB (1x32GB) Quad Rank x4 PC3-14900L (DDR3-1866) Load Reduced CAS-13 Memory Kit	708643-B21
Load Reduced DIMMs (LRDIMMs) **NOTE:** The following memory is supported by the E5-2600 series Processors.	
HP 32GB (1x32GB) Quad Rank x4 PC3L-10600L (DDR3-1333) Load Reduced CAS-9 Low Voltage Memory Kit	647903-B21
NOTE: All DDR3 memory option kits consist of one DIMM per kit. For detailed memory configuration rules and guidelines, please use the Online DDR3 Memory Configuration Tool: http://www.hp.com/go/ddr3memory-configurator. **NOTE:** For more information on ProLiant Energy Efficient Features, see: http://www.hp.com/go/proliant-energy-efficient **NOTE:** PC3L is a low voltage memory.	

Storage

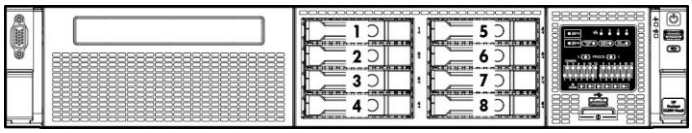

1-8 Eight SFF SAS hot plug drive bays

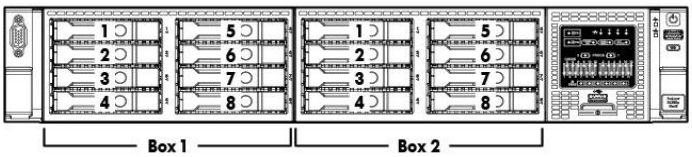

1-16 Sixteen SFF SAS hot plug drive bays
NOTE: This configuration does not support optical drive.
NOTE: This configuration requires the addition of a second controller for the second drive cage.

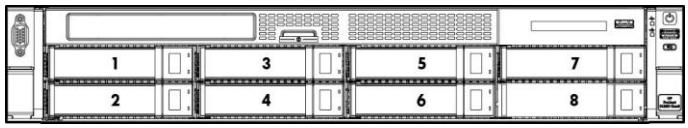

1-8 Eight LFF SAS hot plug drive bays.

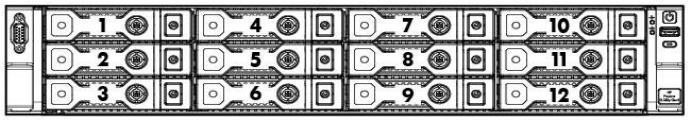

1-12 Twelve LFF SAS hot plug drive bays.
NOTE: This configuration does not support optical drive.
NOTE: This configuration has a built-in expander that is driven by the embedded controller.

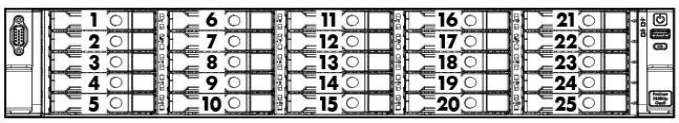

1-25 Twenty-five SFF SAS hot plug drive bays.
NOTE: This configuration does not support optical drive.
NOTE: This configuration has a built-in expander that is driven by the embedded controller.

Maximum Storage Capacity - (with D2700, SAS/SATA HDD)

Internal	30TB (25 SFF HDDs x 1.2TB SAS SFF)
Internal	48TB (12 LFF HDDs x4TB SATA LFF)
External	240TB (200 x 1.2TB SAS SFF)
Total	270TB (D2700 + DL380p Gen8 25 SFF) 288TB (D2700 + DL380p Gen8 12 LFF)

System Unit	**Dimensions** (H x W x D)	SFF Drives: 3.44 x 17.54 x 27.50 in (8.73 x 44.55 x 69.85 cm) LFF Drives: 3.44 x 17.54 x 29.50 in (8.73 x 44.55 x 74.93 cm)	
	Weight (approximate)	Maximum (all LFF hard drives, power supply, and processor installed)	61.00 lb (27.66 kg)
		Minimum (one SFF hard drive, power supply, and processor installed, ODD not installed)	41.0 lb (18.59 kg)
	Input Requirements (per power supply)	Rated Line Voltage	100 to 120 VAC 200 to 240 VAC
		Rated Input Current	For 1200 W Power Supply: 10 A (at 100 VAC), 4.9 A (at 200 VAC) For 750 W Power Supply: 8.9 A (at 100 VAC), 4.3 A (at 200 VAC) For 460 W Power Supply: 5.5 A (at 100 VAC), 2.6 A (at 200 VAC)
		Rated Input Frequency	50 to 60 Hz
		Rated Input Power	For 1200 W Power Supply: 930 W (at 100 VAC), 1348 W (at 200 VAC) For 750 W Power Supply: 857 W (at 100 VAC), 824 W (at 200 VAC) For 460 W Power Supply: 526 W (at 100 VAC), 505 W (at 200 VAC)
	BTU Rating	Maximum	For 1200 W Power Supply: 3530 BTU/hr (at 100 VAC), 4600 BTU/hr (at 200 VAC) For 750 W Power Supply: 2925 BTU/hr (at 100 VAC), 2812 BTU/hr (at 200 VAC) For 460 W Power Supply: 1794 BTU/hr (at 100 VAC), 1725 BTU/hr (at 200 VAC)
	Power Supply Output (per power supply)	Rated Steady-State Power	For 1200 W Power Supply: 800 W (at 100 VAC), 900 W (at 120 VAC), 1200 W (at 200 to 240 VAC) For 750 W Power Supply: 750 W (at 100 to 120 VAC), 750 W (at 200 to 240 VAC) For 460 W Power Supply: 460 W (at 100 to 120 VAC), 460 W (at 200 to 240 VAC)
		Maximum Peak Power	For 1200 W Power Supply:

		800 W (at 100 VAC), 900 W (at 120 VAC), 1200 W (at 200 to 240 VAC) For 750 W Power Supply: 750 W (at 100 to 120 VAC), 750 W (at 200 to 240 VAC) For 460 W Power Supply: 460 W (at 100 to 120 VAC), 460 W (at 200 to 240 VAC)
System Inlet Temperature	Operating	10° to 35°C (50° to 95°F) at sea level with an altitude derating of 1.0°C per every 304.8 m (1.8°F per every 1000 ft) above sea level to a maximum of 3048 m (10,000 ft), no direct sustained sunlight. Maximum rate of change is 10°C/hr (18°F/hr). The upper limit may be limited by the type and number of options installed. System performance may be reduced if operating with a fan fault or above 30°C (86°F).
	Non-operating	-30° to 60°C (-22° to 140°F). Maximum rate of change is 20°C/hr (36°F/hr).
Relative Humidity (non-condensing)	Operating	10% to 90% relative humidity (Rh), 28°C (82.4°F) maximum wet bulb temperature, non-condensing.
	Non-operating	5% to 95% relative humidity (Rh), 38.7°C (101.7°F) maximum wet bulb temperature, non-condensing.
Altitude	Operating	3048 m (10,000 ft). This value may be limited by the type and number of options installed. Maximum allowable altitude change rate is 457 m/min (1500 ft/min).
	Non-operating	9144 m (30,000 ft). Maximum allowable altitude change rate is 457 m/min (1500 ft/min).
Acoustic Noise	Listed are the declared A-Weighted sound power levels (LWAd) and declared average bystander position A-Weighted sound pressure levels (LpAm) when the product is operating in a 23°C ambient environment. Noise emissions were measured in accordance with ISO 7779 (ECMA 74) and declared in accordance with ISO 9296 (ECMA 109). The listed sound levels apply to standard shipping configurations. Additional options may result in increased sound levels. **NOTE:** The Listed sound levels apply to standard shipping configurations. Additional options may result in increased sound levels.	

	Entry	**Base**	**Performance**
Idle			
LWAd	4.1 B	4.1 B	4.1 B
LpAm	25 dBA	25 dBA	25 dBA
Operating			
LWAd	4.3 B	4.7 B	5.0 B
LpAm	27 dBA	31 dBA	35 dBA

Emissions Classification (EMC)	FCC Rating	Class A
	Normative Standards	CISPR 22; EN55022; EN55024; FCC CFR 47, Pt 15; ICES-003; CNS13438; GB9254; K22;K24; EN

		61000-3-2; EN 61000-3-3; EN 60950-1; IEC 60950-1 **NOTE:** Product conformance to cited product specifications is based on sample (type) testing, evaluation, or assessment. This product or family of products is eligible to bear the appropriate compliance logos and statements. **NOTE:** The Listed sound levels apply to standard shipping configurations. Additional options may result in increased sound levels.
HP Smart Array P420i Controller	**Dimensions**	Embedded
	Disk Drive and Enclosure Interface - Transfer Rate	6Gb/s SAS (Serial Attached SCSI) 6Gb/s SATA (Serial ATA)
	SAS Connectors	2 internal 4X connectors
	Cache Memory Speed	512MB FBWC - DDR3-1333MHz with 40-bit wide bus, 1GB or 2GB FBWC DDR3-1333MHz with 72-bit wide bus
	Server Interface	x8 PCIe 3.0 provides 8GB/s maximum bandwidth
	SAS Speed	(8) 6Gb/s SAS links provide 4.8GB/s maximum bandwidth
	Cache Memory	Zero Memory RAID has no cache memory 40-bit 512MB ECC protected flash back write cache 72-bit 1GB FBWC or 72-bit 2GB FBWC
	Logical Drives Supported	Zero Memory, Up to 2 logical volumes (8SFF or 4LFF physical drives) Up to 64 logical drives with cache
	Host Memory Addressing	64-bit, supporting greater than 4GB server memory space
	RAID Support	RAID 6, 60 (Advanced Data Guarding) RAID 5, 50 (Distributed Data Guarding) **NOTE:** A minimum of 512 MB cache is required to enable RAID 5, 50, 6, 60 **NOTE:** HP Smart Array Advanced Pack (SAAP 2.0) is no longer required to enable RAID 6 & 60 (Advanced Data Guarding). However, controller must be in firmware version 4.68 (or later). RAID 10 (Striping & Mirroring) RAID 0 (Striping), RAID 1 (Mirroring)
HP Ethernet 1Gb 4-port 331FLR Adapter	**HP Flexible Network Technology**	HP Flexible Network Technology consists of replaceable network solutions to meet customer requirements now and in the future.
	Network Interface	10Base-T/100Base-TX/1000Base-TX
	Compatibility	EEE 802.3 10Base-T IEEE 802.3ab 1000Base-T IEEE 802.3u 100Base-TX IEEE 802.3ad 1000Base-TX IEEE 802.1q 100Base-TX
	Data Transfer Method	PCI Express, four lanes (x4)
	Chipset	BCM5719
	Network Transfer Rate	10Base-T (Half-Duplex) 10 Mb/s 10Base-T (Full-Duplex) 20 Mb/s 100Base-TX (Half-Duplex) 100 Mb/s 100Base-TX (Full-Duplex) 200 Mb/s 1000Base-TX (Half and 2000Mb/s

		Full-Duplex)	
	Connector	Four RJ-45	
	Cable Support	10Base-T	Categories 3, 4 or 5 UTP; up to 328 ft (100 m)
		100Base-TX	Category 5 or higher UTP; up to 328 ft (100 m)
		1000BaseTX	Category 5 or higher UTP; up to 328 ft (100 m)
HP Ethernet 10Gb 2-port 530FLR-SFP+ Adapter	**Network Interface Compatibility**	SFP+ for Direct Attach Cable copper or fiber IEEE 802.3 SFP+ (SX, SR & LR) IEEE 802.3ae IEEE 802.1ax IEEE 802.1q IEEE 802.3x IEEE 802.1au IEEE 802.3ap IEEE 802.1Qaz IEEE 802.1Qau IEEE 802.1Qbb	
	Data Transfer Method	PCI Express, eight lanes (x8)	
	Chipset	BCM57810S	
	Network Transfer Rate	10Base-T (Half-Duplex)	10Gbps
		10Base-T (Full-Duplex)	1Gbps
	Connector	Two SFP+	
	Cable Support	10Base-T	Categories 3, 4 or 5 UTP; up to 328 ft (100 m)
		100Base-TX	Category 5 or higher UTP; up to 328 ft (100 m)
		1000BaseTX	Category 5 or higher UTP; up to 328 ft (100 m)
HP FlexFabric 10Gb 2-port 533FLR-T Adapter	**Network Interface Compatibility**	10GBASE-T connectivity supporting up to 100 meters with CAT 6A cabling IEEE 802.3 IEEE 802.3x IEEE 802.2x IEEE 802.3ad IEEE 802.1Qaz IEEE 802.1Qau IEEE 802.1Qbb IEEE 802.1Qbg IEEE 802.1ax	
	Data Transfer Method	PCIe 2.0, eight lanes (x8)	
	Chipset	BCM57810S	
	Data Rate	Two ports, each at 20 Gbps full duplex; 40 Gbps aggregate full duplex theoretical bandwidth.	

Technical Specifications

	Connector	Two RJ-45
	Cable Support	Maximum distances for CAT6 cable are 30 meters (98 feet). Maximum distances for CAT6a are 100 meters (328 feet).
Environment-friendly Products and Approach	**End-of-life Management and Recycling**	Hewlett-Packard offers end-of-life HP product return, trade-in, and recycling programs in many geographic areas. For trade-in information, please go to: http://www.hp.com/go/green. To recycle your product, please go to: http://www.hp.com/go/green or contact your nearest HP sales office. Products returned to HP will be recycled, recovered or disposed of in a responsible manner. The EU WEEE directive (2002/95/EC) requires manufacturers to provide treatment information for each product type for use by treatment facilities. This information (product disassembly instructions) is posted on the Hewlett Packard web site at: http://www.hp.com/go/green. These instructions may be used by recyclers and other WEEE treatment facilities as well as HP OEM customers who integrate and re-sell HP equipment.

Summary of Changes

Date	Version History	Action	Description of Change
28-Sep-2015	From Version 71 to 72	Added	Added new 6Gb SATA Solid State Drives. Added new HP OneView management software.
		Changed	Maximum Internal Storage and HP Computation and Graphics Accelerators were revised.
		Removed	Obsolete SKUs were removed from the QuickSpecs.
17-Aug-2015	From Version 70 to 71	Added	New Solid State Drives offering was added to HP Hard Drives section.
01-Jun-2015	From Version 69 to 70	Added	New Hard Drives were added to Core Options.
		Removed	Obsolete SKUs were removed from Core Options and Additional Options.
30-Mar-2015	From Version 68 to 69	Added	New Hard Drives added to Core Options.
		Changed	What's New, Standard Features, Pre-Configured Models, Configuration Information - Factory Integrated Models, and Core Options were revised.
09-Feb-2015	From Version 67 to 68	Added	New Hard Drives, DirectFlow UPS, Rack and Tower G4 Models, LCD8500 1U Rackmount Models and Options were added to the Additional Options section.
		Changed	HP Uninterruptible Power Systems, HP Rack Options, and HP Care Pack Services in Additional Options section were revised.
22-Jan-2015	From Version 66 to 67	Changed	PCI-Express Slots were revised in the Pre-configured Models section for the North America version only. HP Computation and Graphics Accelerators section was revised.
01-Dec-2014	From Version 65 to 66	Changed	Version number changed to match Product Bulletin.
01-Dec-2014	From Version 64 to 65	Added	HP 1.6TB 6G SATA Value Endurance SFF 2.5-in SC Enterprise Value 3yr Wty Solid State Drive and HP 1.6TB 6G SATA Value Endurance LFF 3.5-in SC Converter Enterprise Value 3yr Wty Solid State Drive were added to HP Hard Drives. Value Endurance (VE) PCIe Workload Accelerators added to HP PCIe Workload Accelerator Options.
29-Sep-2014	From Version 63 to 64	Changed	Version number was increased in sequence to match Product Bulletin version number.
29-Sep-2014	From Version 62 to 63	Added	New Solid State Drives were added. HP Managed Power Distribution Units (maPDU) was added to Additional Options.
		Changed	Service and Support section was revised. HP Hard Drives was revised in Core Options section.
09-Sep-2014	From Version 61 to 62	Changed	Minor edits to Notes in Configuration Information - Factory Integrated Models section.
18-Aug-2014	From Version 60 to 61	Added	New Hard Drives were added. HP Remote mPDUs half height were added.
		Changed	Configuration Information - Factory Integrated Models, Core Options, Additional Options sections were revised.
27-Jun-2014	From Version 59 to 60	Changed	Changes were made in North America and Canada only.
10-June-2014	From Version 58 to 59	Added	HP Common Slot Platinum Power Supply Kits added to Configuration Information – Factory Integrated Models and Core Options. 12G SAS VE SFF (2.5-inch) SC EV Solid State Drives and 12G SAS VE LFF (3.5-inch) SCC EV Solid State Drives added to Hard Drives. Intel® Xeon® Phi 5110P (8GB/225W) Coprocessor Kit added to Graphics Accelerators.

Summary of Changes

			Light Endurance (LE) PCIe Workload Accelerators. E7X53A, C8S07A and C8S08A were added to Disk Backup.
		Changed	What's new section was revised. Configuration Information – Factory Integrated Models, Core Options, Additional Options and Memory were revised.
		Removed	653082-B21 and 653078-B21 removed from Hard Drives. 650931-B21 was removed from Host Bus Adapter. B7B64A and B7B67A were removed from Disk Backup.
09-May-2014	From Version 57 to 58	Changed	Memory, Hard Drives, Storage Controllers, and Power Distribution Units were revised.
31-Mar-2014	From Version 56 to 57	Changed	12G SAS High Endurance Hot Plug SFF Enterprise Performance Solid State Drives and 12G SAS Mainstream Endurance Hot Plug SFF Enterprise Mainstream Solid State Drives were added to Hard Drives. Processors, Networking, Graphics Options, Unique Options, HP InfiniBand, HP I/O Expansion Options, HP Computation and Graphics Accelerators, Insight Software, Storage Controllers, Tape Backup, HP USB and SD Options were revised.
20-Feb-2014	From Version 55 to 56	Changed	Changes made in the North America and Canada versions only.
18-Feb-2014	From Version 54 to 55	Changed	Changes made to What's New section that affect various sections throughout the QuickSpecs: New Primary Riser for GPU support and additional GPU options HP 2U Easy Install Rail Kits
20-Dec-2013	From Version 53 to 54	Changed	Changes made to descriptions in the Processors, Memory and Hard Drives sections.
13-Dec-2013	From Version 52 to 53	Changed	Changes made in the North America and Canada versions only.
09-Dec-2013	From Version 51 to 52	Added	HP StoreVitual VSA was added to Standard Features HP 1.2TB 6G SAS 10K rpm SFF SC Dual Port Enterprise Hard Drive was added to Hard Drives NVIDIA Quadro K4000 and K5000 PCIe Graphics Adapters and NVIDIA GRID K1 PCIe GPU FIO Adapter were added to Graphics Adapters HP SmartCache was added to Storage Controllers HP Tape Storage Systems and HP Disk Storage Systems were added to Additional Options HP Ethernet 10Gb 2-port 570FLR-SFP+ FIO Adapter was removed from Networking
15-Nov-2013	From Version 50 to 51	Changed	Minor changes made to the Core Options/ Hard Drives Section.
07-Nov-2013	From Version 49 to 50	Added	Added a Note in the Models Country Code.
01-Nov-2013	From Version 48 to 49	Changed	Changes made in the North America and Canada versions only.
25-Oct-2013	From Version 47 to 48	Changed	Correction made in the Models section.
11-Oct-2013	From Version 46 to 47	Added	HP Ethernet 10Gb 2-port 571FLR-SFP+ FIO Adapter was added to Networking Converged Infrastructure Management Software was added HP 600GB 6G SATA Value Endurance SFF and LFF SC Enterprise Value Solid State Drives and HP 300GB 6G SATA Value Endurance SFF and LFF SC Enterprise Value Solid State Drives were added to Hard Drives Mainstream Endurance (ME) PCIe Workload Accelerators were added to HP PCIe Workload Accelerator Options HP Remote Monitoring Power Distribution Units were added to Additional Options HP 8GB SD Enterprise Mainstream Flash Media Kit was added to HP USB and SD Options

Summary of Changes

08-Oct-2013	From Version 45 to 46	Changed	Changes made to the Memory sections in Configuration, Core Options and Memory Sections.
24-Sep-2013	From Version 44 to 45	Changed	Changes made to the Configuration and Core Options Section
20-Sep-2013	From Version 43 to 44	Changed	Corrected a link in the Standard Features section.
16-Sep-2013	From Version 42 to 43	Changed	Correction made in the Related Options section.
12-Sep-2013	From Version 39 to 41	Changed	Changes made in the North America and Canada versions only.
10-Sep-2013	From Version 38 to 39	Added	E5-2600 v2 series processors were added to Processors 25MB and 30MB level 3 were added to Cache Memory Canonical Ubuntu was added to Operating Systems and Virtualization Software Support for ProLiant Servers 6G SATA Value Endurance Hot Plug Enterprise Boot Solid State Drives were added to Hard Drives
27-Aug-2013	From Version 37 to 38	Changed	Changes were made in the North America and Canada versions.
15-Jul-2013	From Version 36 to 37	Changed	HP Disk Backup was revised in Additional Options.
10-Jul-2013	From Version 35 to 36	Added	Added 721458-B21 to the HP I/O Accelerator Options section.
05-Jul-2013	From Version 34 to 35	Changed	Changes made to the North America and Canada versions only.
06-Jun-2013	From Version 33 to 34	Changed	Updated What's New, notes in the Power Supplies sections, and notes in the Factory Configured Models section,
31-May-2013	From Version 32 to 33	Changed	Changes made to the North America and Canada versions only.
13-May-2013	From Version 31 to 32	Changed	Additional Options: Updated Rail Kits in the HP Rack Options section.
		Added	Configuration Information: Added a NOTE to the HP Power Supplies section. Core Options: Added 695510-B21 to HP Hard Drives, 717491-B21 to HP Networking, 684539-B21 and a note to HP Power supplies, 728593-B21 to HP Graphic Options. Additional Options: HP PCIe Workload Accelerator Options complete section, HP Basic Power Distribution Units complete section.
		Removed	Additional Options: Removed 641027-B21, 600279-B21 and 600282-B21 from the HP I/O Accelerator Options.
25-Mar-2013	From Version 30 to 31	Added	Configuration Information: Added a NOTE to the HP Power Supplies section. Core Options: Added a NOTE to the HP Power Supplies section.
		Removed	Additional Options: Removed 641027-B21, 600279-B21 and 600282-B21 from the HP I/O Accelerator Options.
25-Feb-2013	From Version 29 to 30	Changed / Added	Changes made to the following sections: Optional Features - Added HP Proactive Insight experience Core Options - HP Networking, Memory
19-Feb-2013	From Version 28 to 29	Changed	Changes made to the Configuration Information, Options and Storage sections.
06-Feb-2013	From Version 27 to 28	Changed	Changes made to the North America and Canada versions only.
04-Dec-2012	From Version 26 to 27	Changed	Changes were made in the Overview, Standard Features, Options, Storage, Memory and Technical Specifications sections.
27-Nov-2012	From Version 25 to 26	Changed	Update was made to add a new Note in the Hard Drives section of Core Options.
26-Oct-2012	From Version 24 to 25	Changed	Changes were made in the Models section.
23-Oct-2012	From Version 23 to 24	Changed	Changes were made in the Core Options section.
12-Oct-2012	From Version 22 to 23	Changed	Changes were made in the Core Options section.
24-Sep-2012	From Version 21 to 22	Changed	Changes were made in Standard Features, Optional Features and Technical Specifications sections.
28-Aug-2012	From Version 20 to 21	Changed	Changes made in Models and Options sections.
22-Aug-2012	From Version 19 to 20	Changed	Changes made in Technical Specifications.
17-Aug-2012	From Version 18 to 19	Changed	Changes made throughout the entire QuickSpecs.

Summary of Changes

27-Jul-2012	From Version 17 to 18	Changed	A Note was changed in Step 1 of the Configuration Information section.
12-Jul-2012	From Version 16 to 17	Changed	Changes made in the North America and Canada versions.
26-Jun-2012	From Version 15 to 16	Changed	Two notes were changed in Step 1 of the Configuration Information section.
19-Jun-2012	From Version 14 to 15	Removed	Removed a Note from Configuration Information and Additional Options sections.
14-Jun-2012	From Version 13 to 14	Changed	Changes made within the Standard Features and Options sections.
04-Jun-2012	From Version 12 to 13	Changed	Changes made throughout the entire QuickSpecs.
18-May-2012	From Version 11 to 12	Changed	Changes made to the Processors section of Standard Features.
17-May-2012	From Version 10 to 11	Changed	Changes made to the Memory section of Standard Features.
14-May-2012	From Version 9 to 10	Changed	Changes made throughout the entire QuickSpecs.
12-Apr-2012	From Version 7 to 9	Changed	Revised the size of the Memory image.
06-Apr-2012	From Version 6 to 7	Changed	Memory and HP Ethernet 10Gb 2-port 530FLR-SFP+ Adapter were revised.
27-Mar-2012	From Version 4 to 6	Changed	Revised the size of the Memory image.
26-Mar-2012	From Version 3 to 4	Changed	HP iLO Advanced Features was completely revised.
16-Mar-2012	From Version 2 to 3	Changed	Changes made in the Standard Features, Core Options and Storage sections.
07-Mar-2012	From Version 1 to 2	Changed	Changes made in the Memory section.

© Copyright 2015 Hewlett-Packard Development Company, L.P.

The information contained herein is subject to change without notice.
Microsoft and Windows NT are US registered trademarks of Microsoft Corporation.
Intel, the Intel logo, Xeon and Xeon Inside are trademarks of Intel Corporation in the U.S. and other countries.

The only warranties for HP products and services are set forth in the express warranty statements accompanying such products and services. Nothing herein should be construed as constituting an additional warranty. HP shall not be liable for technical or editorial errors or omissions contained herein.

For hard drives, 1GB = 1 billion bytes. Actual formatted capacity is less.