HPE Proliant DL385 Gen10 Plus Server User Guide

Part Number: P16394-005a
Published: August 2022
Edition: 6

HPE ProLiant DL385 Gen10 Plus Server User Guide

Abstract
This document is for the person who installs, administers, and troubleshoots servers and storage systems. Hewlett Packard Enterprise assumes you are qualified in the servicing of computer equipment and trained in recognizing hazards in products with hazardous energy levels.

Part Number: P16394-005a
Published: August 2022
Edition: 6

© Copyright 2019-2022 Hewlett Packard Enterprise Development LP

Notices

The information contained herein is subject to change without notice. The only warranties for Hewlett Packard Enterprise products and services are set forth in the express warranty statements accompanying such products and services. Nothing herein should be construed as constituting an additional warranty. Hewlett Packard Enterprise shall not be liable for technical or editorial errors or omissions contained herein.

Confidential computer software. Valid license from Hewlett Packard Enterprise required for possession, use, or copying. Consistent with FAR 12.211 and 12.212, Commercial Computer Software, Computer Software Documentation, and Technical Data for Commercial Items are licensed to the U.S. Government under vendor's standard commercial license.

Links to third-party websites take you outside the Hewlett Packard Enterprise website. Hewlett Packard Enterprise has no control over and is not responsible for information outside the Hewlett Packard Enterprise website.

Acknowledgments

Linux® is the registered trademark of Linus Torvalds in the U.S. and other countries.
Microsoft®, Windows®, and Windows Server® are either registered trademarks or trademarks of Microsoft Corporation in the United States and/or other countries.
Red Hat® Enterprise Linux® are registered trademarks of Red Hat, Inc. in the United States and other countries.
VMware ESXi™ and VMware vSphere® are registered trademarks or trademarks of VMware, Inc. in the United States and/or other jurisdictions.
All third-party marks are property of their respective owners.

Table of contents

Component identification 10
- Front panel components 10
- Front panel LEDs and buttons 13
  - UID button functionality 19
  - Front panel LED power fault codes 19
  - Systems Insight Display LEDs 20
  - Systems Insight Display combined LED descriptions 22
- Rear panel components 24
- Rear panel LEDs 25
- System board components 26
  - System maintenance switch descriptions 27
  - DIMM label identification 28
  - DIMM slot locations 30
  - Processor and socket components 30
- Drive box identification 31
- Drive bay numbering 35
  - Drive bay numbering: Smart Array controller 36
  - Drive bay numbering: SAS expander 40
  - Drive bay numbering: NVMe drives 44
- Drives 45
  - LFF drive LED definitions 45
  - HPE SmartDrive 46
- DSC-25 2-port SFP28 card ports and LEDs 48
- HPE NS204i-p NVMe OS Boot Device components 50
- HPE NS204i-p NVMe OS Boot Device LED definitions 51
- Fan bay numbering 52

Operations 53
- Power up the server 53
- Power down the server 54
- Extending the server from the rack 54
- Secure cables using the cable management arm 55
  - Removing the server from the rack 58
- Remove the access panel 59
- Install the access panel 59

Removing the fan cage 59
Installing the fan cage 61
Removing the air baffle or midplane drive cage 62
Installing the air baffle 64
Removing a riser cage 65
Removing a riser slot blank 67
Removing the hard drive blank 68
Releasing the cable management arm 69
Accessing the Systems Insight Display 69
Setup 70
Optional service 70
Initial system installation 71
HPE Installation Service 71
Setting up the server 72
Operational requirements 75
Space and airflow requirements 75
Temperature requirements 76
Power requirements 77
Electrical grounding requirements 77
Server warnings and cautions 78
Rack warnings 79
Preventing electrostatic discharge 80
POST screen options 81
Installing or deploying an operating system 81
Hardware options installation 82
Introduction 82
Installing the bezel and bezel lock 82
Drive options 84
Drive guidelines 84
Supported drive carriers 85
Installing a hot-plug SAS or SATA drive or an NVMe drive 85
Power supply option 87
Installing a hot-plug AC power supply 88
Installing the HPE 800 W Flex Slot -48 VDC hot-plug power supply 90
Installing the HPE 1600 W Flex Slot -48 VDC hot-plug power supply 102
Connecting a DC power cable to a DC power source 109
Installing a Universal Media Bay 112
Drive cage options 115

Installing a front 8NVMe SSD Express Bay drive cage....116
Installing a front 6 SFF SAS/SATA + 2 NVMe Premium drive cage....118
Installing a front 8 SFF SAS/SATA drive cage in box 1....120
Installing a front 8 SFF SAS/SATA drive cage in box 2....123
Installing a front 2 SFF NVMe/SAS/SATA Premium drive cage....125
Installing a midplane 4 LFF SAS/SATA drive cage....130
Installing a midplane 8 SFF SAS/SATA drive cage....135
Installing a rear 2 SFF SAS/SATA drive cage over the power supplies....140
Installing a rear 2 SFF SAS/SATA drive cage in the primary or secondary riser....146
Fan options....149
Installing high-performance fans....154
Processor and heatsink options....157
Installing a processor....157
Installing a 1U or high-performance heatsink....164
Memory options....167
DIMM-processor compatibility....168
DIMM population information....168
Memory speed tables....168
Installing a DIMM....168
Storage controller options....170
Installing a storage controller....171
Energy pack options....172
HPE Smart Storage Battery....173
HPE Smart Storage Hybrid Capacitor....173
Minimum firmware versions....174
Installing an energy pack....174
Riser and riser cage options....177
Installing primary and secondary risers....177
Installing tertiary risers....179
Installing a secondary riser cage....180
Installing a tertiary riser cage....182
Installing the 2 NVMe Slim SAS riser option....186
Installing the 8 NVMe Slim SAS riser option....187
Expansion slots....188
Supported PCIe form factors....188
Installing expansion boards....190
Installing a 12G SAS Expander Card....193
Accelerator options....198

Installing an accelerator or GPU 198
Installing an OCP NIC 3.0 adapter 204
Installing the Pensando DSP DSC-25 2p SFP28 card 206
Installing the HPE NS204i-p NVMe OS Boot Device option 209
Installing the Systems Insight Display 212
Installing the chassis intrusion detection switch 215
Installing a rear serial port interface 216
HPE Trusted Platform Module 2.0 Gen10 Plus option 218
Overview 218
HPE Trusted Platform Module 2.0 guidelines 219
Installing and enabling the HPE TPM 2.0 Gen10 Plus option 220
Installing the Trusted Platform Module board 220
Preparing the server for installation 220
Installing the TPM board and cover 222
Preparing the server for operation 224
Enabling the Trusted Platform Module 225
Enabling the Trusted Platform Module as TPM 2.0 225
Enabling the Trusted Platform Module as TPM 1.2 226
Retaining the BitLocker recovery key/password 227
Cabling 227
HPE ProLiant Gen10 Plus DL Servers Storage Cabling Guidelines 227
Cabling diagrams 228
Cable routing: 8 LFF front I/O module to SATA Port 234
Cable routing: Universal Media Bay to SATA Port 235
Cable routing: 2 SFF Slim SAS Universal Media Bay in box 1 to system board 235
Cable routing: 2 SFF side by side SATA to system board 236
Cable routing: Front 8 SFF drive options (box 3 to HPE Smart Array E208i-a SR Gen10 Controller, ports 1-2) 237
Cable routing: Front 8 SFF drive options (box 1 to HPE Smart Array P816i-a SR Controller, ports 3-4) 238
Cable routing: 24 SFF SAS drive options (box 1, box 2, and box 3 to SAS expander) 239
Cable routing: 24 SFF drive options (box 1, box 2, and box 3 to SAS expander card and HPE Smart Array P816i-a SR Gen10 Controller, ports 1-2) 240
Cable routing: 8 NVMe Balanced Direct Solution 241
Cable routing: 8 NVMe Direct Single Processor Solution 242
Cable routing: 16 NVMe Balanced Direct Solution 243
Cable routing: 24 NVMe Balanced Direct Solution 244
Cable routing: Front 8 LFF to system board 245

Cable routing: 12 LFF drive options (midtray to system board) 246
Cable routing: Front 12 LFF drive options (midtray to HPE Smart Array P816i-a SR Gen10 Controller, ports 1-4) 247
Cable routing: LFF backplane to HPE Smart Array P816i-a SR Gen10 Controller 248
Cable routing: System board processor 1 (ports 1A and 2A) to slotted expansion board ports 1-2 in the primary riser 249
Cable routing: SFF Front I/O module to Front power/USB 3.1 Gen1 connector 250
Cable routing: Systems Insight Display to front power/USB 3.1 Gen1 connector 251
Cable routing: 12 LFF power switch and thermal sensor to system board 252
Cable routing: 8 LFF front I/O module display port to system board 253
Cable routing: Display port to system board 254
Cable routing: Universal Media bay external USB to dual USB port on system board 255
Cable routing: Rear serial port interface 256
Cable routing: Rear serial port interface (tertiary riser) 257
Cable routing: SFF backplane power cabling to the system board 258
Cable routing: LFF backplane power cabling to the system board 259
Cable routing: 4 LFF backplane and 2 SFF side by side LFF power cable connections to the system board 260
Cable routing: Rear 2 SFF riser power cable 261
Software and configuration utilities 262
Server mode 262
Product QuickSpecs 263
Active Health System Viewer 263
Active Health System 263
Active Health System data collection 264
Active Health System Log 264
HPE iLO 5 265
iLO Federation 265
iLO Service Port 266
iLO RESTful API 267
RESTful Interface Tool 267
iLO Amplifier Pack 267
Integrated Management Log 267
Intelligent Provisioning 268
Intelligent Provisioning operation 269
Management security 270
Scripting Toolkit for Windows and Linux 270
UEFI System Utilities 271

Selecting the boot mode 271
Secure Boot 272
Launching the Embedded UEFI Shell 273
HPE Smart Storage Administrator 273
HPE InfoSight for servers 274
USB support 275
External USB functionality 275
Redundant ROM support 275
Safety and security benefits 275
Keeping the system current 276
Updating firmware or system ROM 276
Service Pack for ProLiant 276
Smart Update Manager 276
Integrated Smart Update Tools 277
Updating firmware from the System Utilities 278
Updating the firmware from the UEFI Embedded Shell 279
Online Flash components 279
Drivers 280
Software and firmware 280
Operating system version support 280
HPE Pointnext Portfolio 281
Proactive notifications 281
Troubleshooting 281
NMI functionality 282
Troubleshooting resources 282
System battery replacement 283
System battery information 283
Replace the system battery 283
Specifications 285
Environmental specifications 285
Mechanical specifications 286
Power supply specifications 286
HPE 500W Flex Slot Platinum Hot-plug Low Halogen Power Supply 287
HPE 800W Flex Slot Platinum Hot-plug Low Halogen Power Supply 288
HPE 800W Flex Slot Titanium Hot-plug Low Halogen Power Supply 289
HPE 800W Flex Slot Universal Hot-plug Low Halogen Power Supply 290
HPE 800W Flex Slot -48VDC Hot-plug Low Halogen Power Supply 291
HPE 1600 W Flex Slot Platinum Hot-plug Low Halogen Power Supply 292

HPE 1600 W Flex Slot -48 VDC Hot-plug Power Supply 293
Websites 294
Support and other resources 294
Accessing Hewlett Packard Enterprise Support 294
Accessing updates 295
Remote support 296
Warranty information 297
Regulatory information 297
Documentation feedback 298

Component identification

Front panel components

SFF front panel components

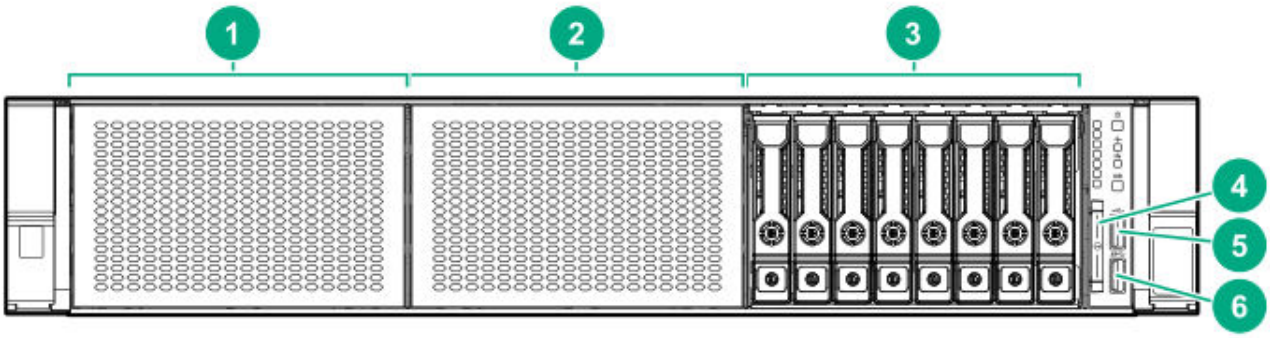

Item	Description
1	Box 1 (optional drives or universal media bay)
2	Box 2 (optional drives)
3	Box 3 drives 1 through 8
4	Serial label pull tab or optional Systems Insight Display LEDs
5	iLO service port
6	USB 3.1 Gen1 port

Universal media bay components

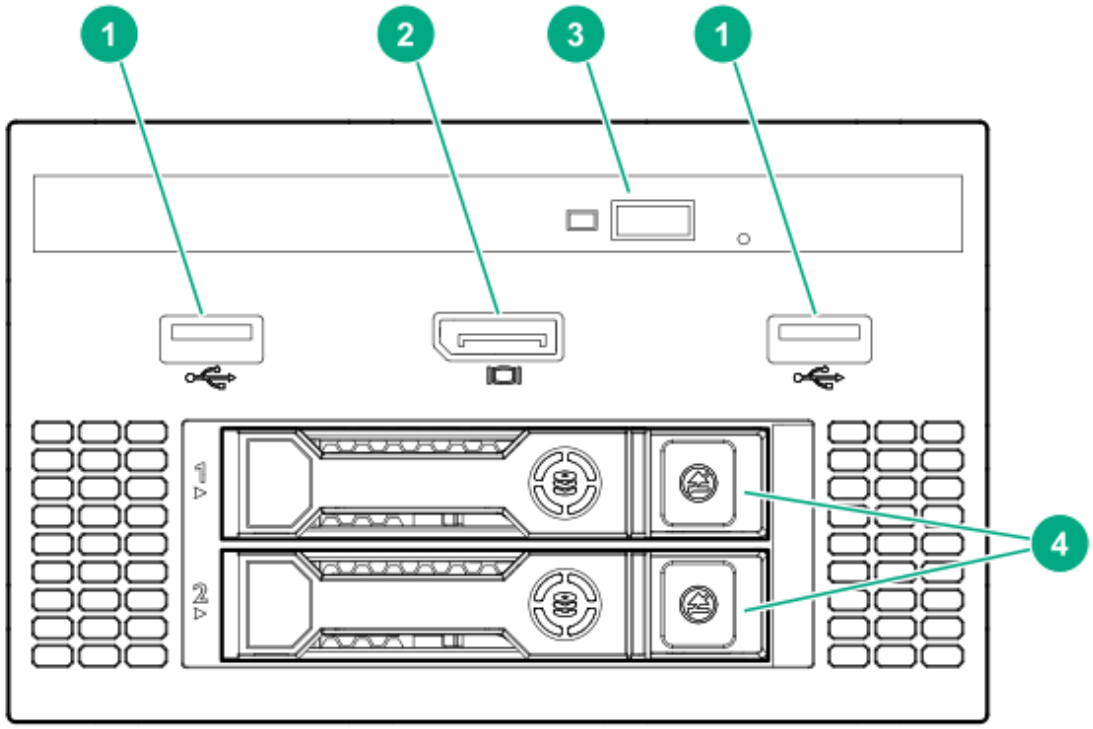

Item	Description
1	USB 2.0 port
2	Video display port
3	Optical disc drive (optional)
4	Drives (optional)

12 LFF front panel components

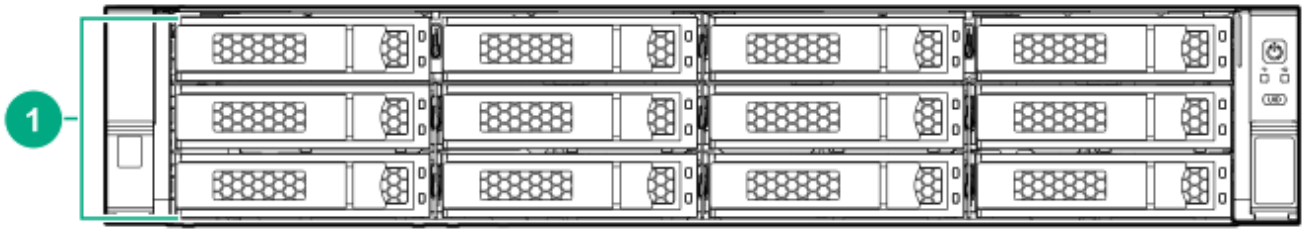

Item	Description
1	Drive bays

8 LFF front panel components

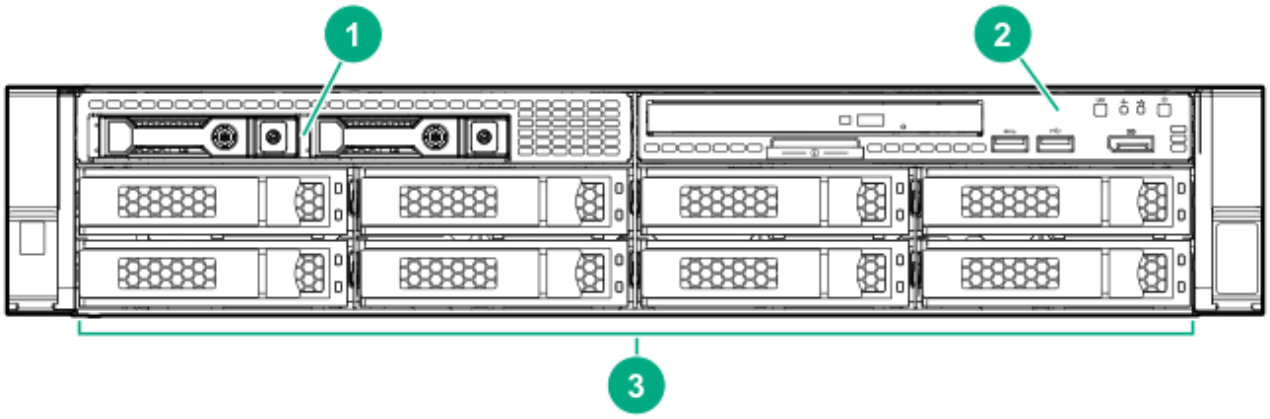

Item	Description
1	Drives (optional)
2	LFF power switch module
3	Drive bays

LFF power switch module components

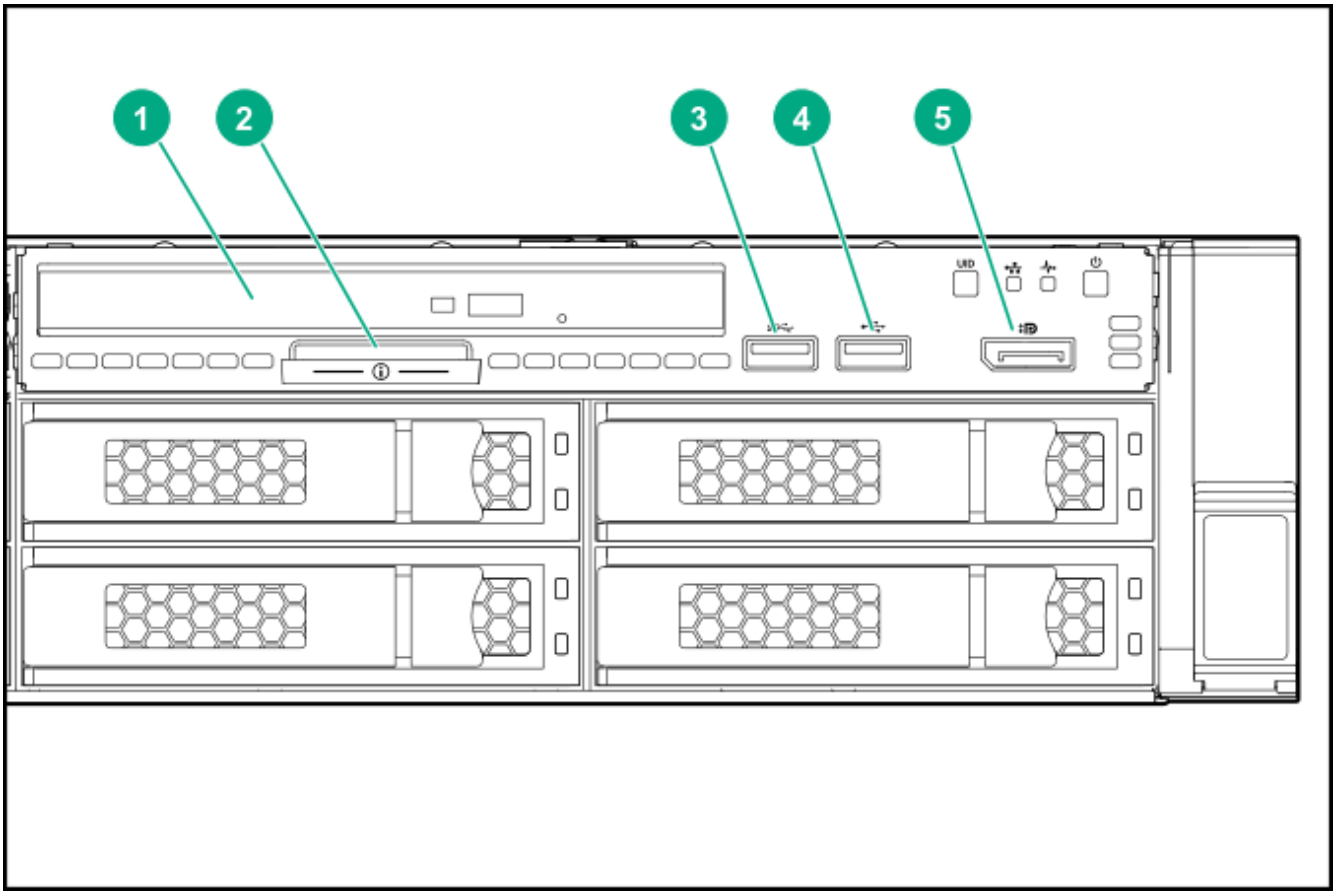

Item	Description
1	Optical disc drive
2	Serial label pull tab
3	USB 3.1 Gen1 port
4	iLO service port
5	Video display port

Front panel LEDs and buttons

SFF front panel LEDs and button

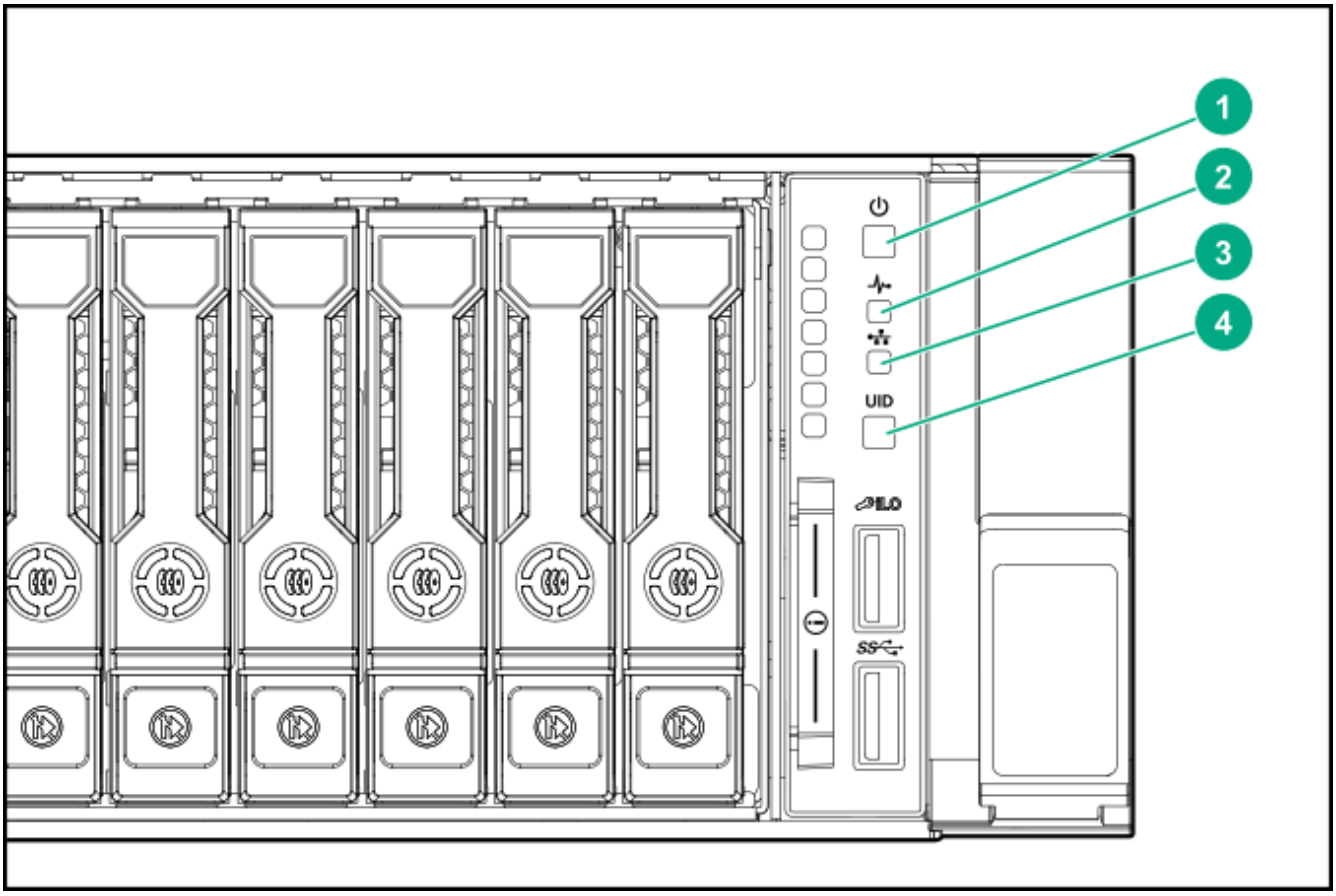

Item	Description	Status
1	Power On/Standby button and system power LED [1]	• Solid green = System on • Flashing green (1 Hz/cycle per sec) = Performing power o n sequence • Solid amber = System in standby • Off = No power present [2]
2	Health LED [1]	• Solid green = Normal • Flashing green (1 Hz/cycle per sec) = iLO is rebooting • Flashing amber = System degraded • Flashing red (1 Hz/cycle per sec) = System critical [3]
3	NIC status LED [1]	• Solid green = Link to network

Item	Description	Status
		• Flashing green (1 Hz/cycle per sec) = Network active • Off = No network activity
4	UID button/LED [1]	• Solid blue = Activated • Flashing blue: ◦ 1 Hz/cycle per sec = Remote management or firmware upgrade in progress ◦ 4 Hz/cycle per sec = iLO manual reboot sequence initiated ◦ 8 Hz/cycle per sec = iLO manual reboot sequence in progress ◦ Off = Deactivated

[1] When all four LEDs described in this table flash simultaneously, a power fault has occurred.
[2] Facility power is not present, the power cord is not attached, no power supplies are installed, power supply failure has occurred, or the power button cable is disconnected.
[3] If the health LED indicates a degraded or critical state, review the system IML or use iLO to review the system health status.

12 LFF front panel LEDs and button

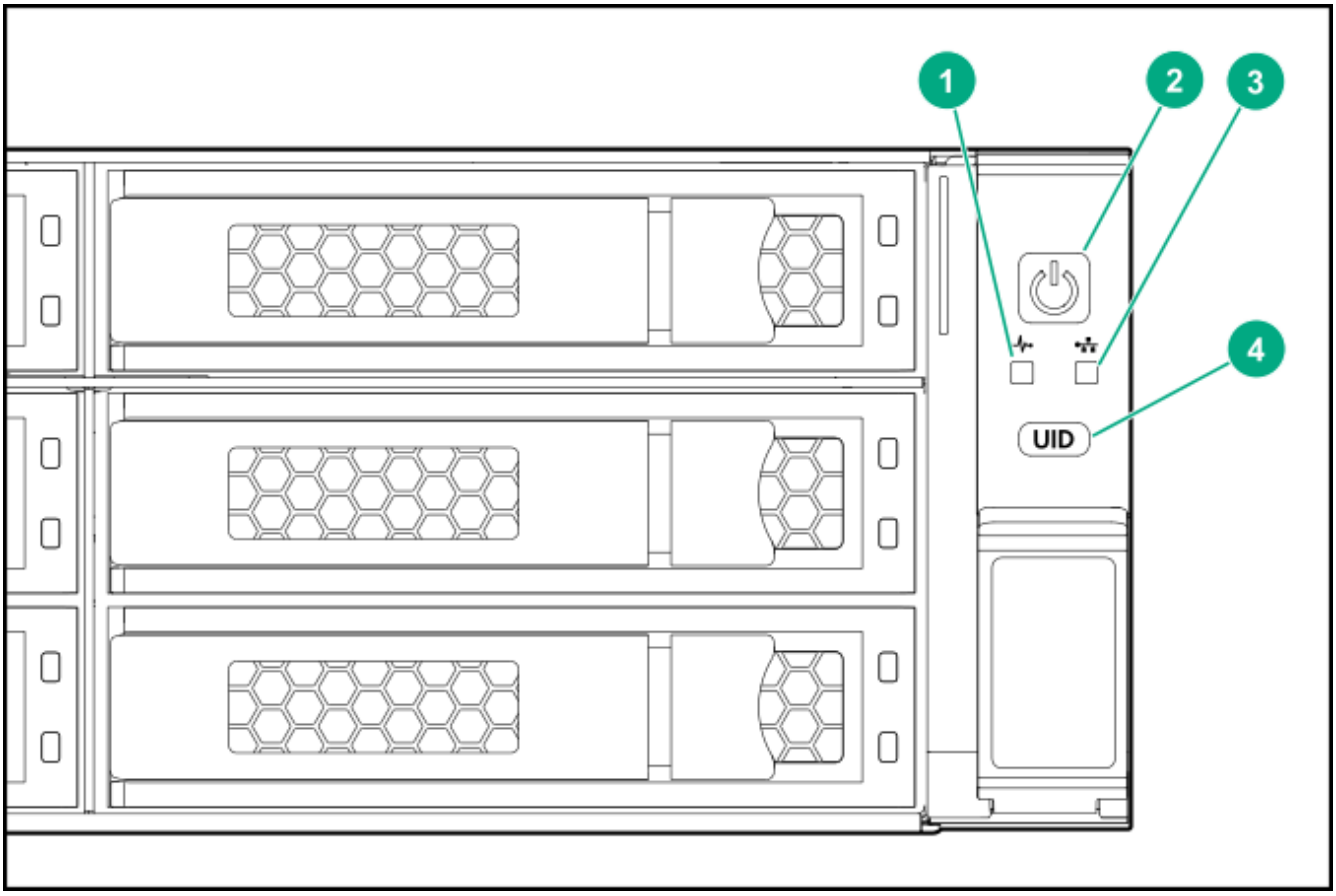

Item	Description	Status
1	Health LED [1]	• Solid green = Normal • Flashing green (1 Hz/cycle per sec) = iLO is rebooting • Flashing amber = System degraded • Flashing red (1 Hz/cycle per sec) = System critical [2]
2	Power On/Standby button and system power LED [1]	• Solid green = System on • Flashing green (1 Hz/cycle per sec) = Performing power o n sequence • Solid amber = System in standby • Off = No power present [3]
3	NIC status LED [1]	• Solid green = Link to network

Item	Description	Status
		• Flashing green (1 Hz/cycle per sec) = Network active • Off = No network activity
4	UID button/LED [1]	• Solid blue = Activated • Flashing blue: ◦ 1 Hz/cycle per sec = Remote management or firmware upgrade in progress ◦ 4 Hz/cycle per sec = iLO manual reboot sequence initiated ◦ 8 Hz/cycle per sec = iLO manual reboot sequence in progress • Off = Deactivated

[1] When all four LEDs described in this table flash simultaneously, a power fault has occurred.
[2] If the health LED indicates a degraded or critical state, review the system IML or use iLO to review the system health status.
[3] Facility power is not present, the power cord is not attached, no power supplies are installed, power supply failure has occurred, or the power button cable is disconnected.

LFF power switch module LEDs and button

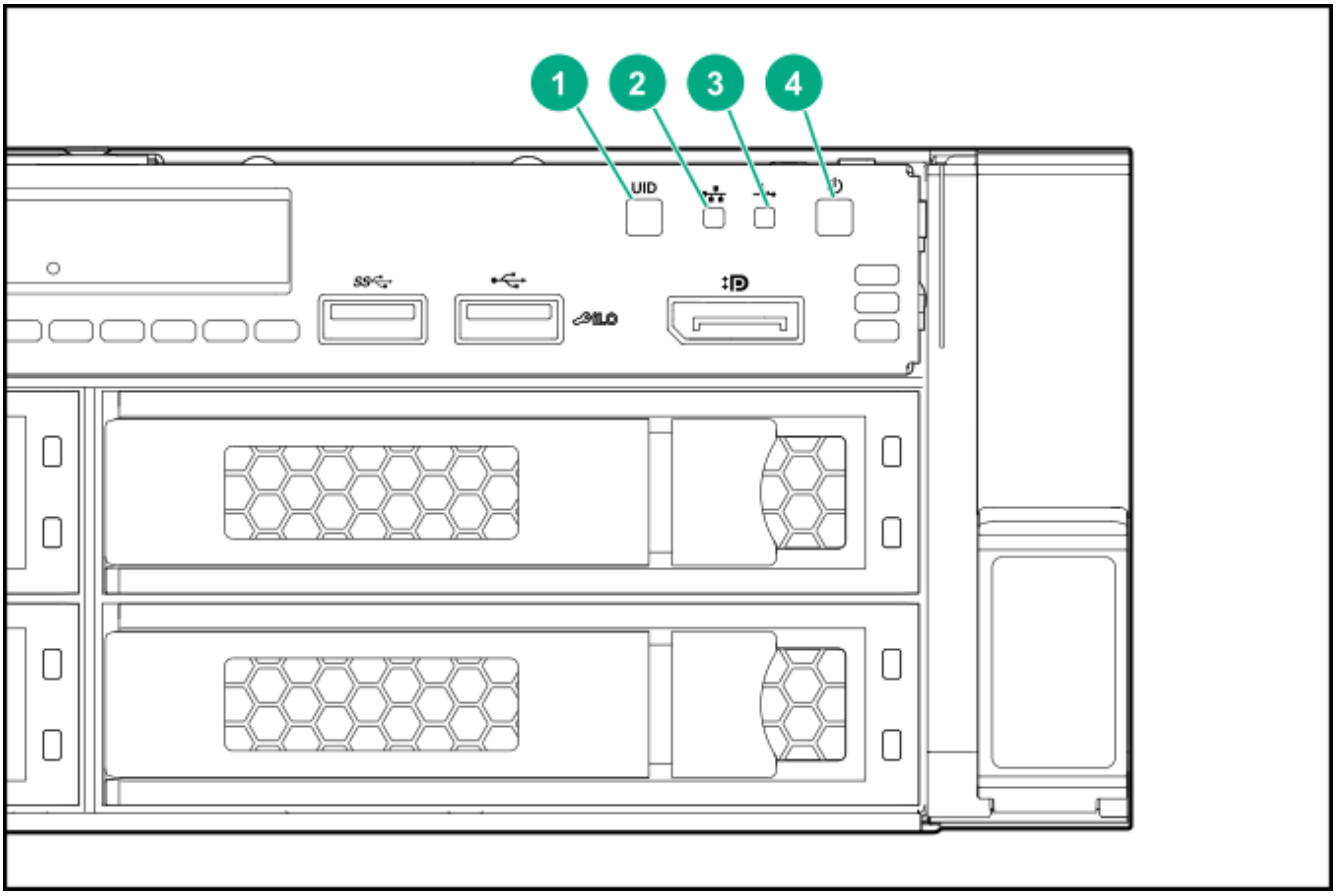

Item	Description	Status
1	UID button/LED [1]	• Solid blue = Activated • Flashing blue: ◦ 1 Hz/cycle per sec = Remote management or firmware upgrade in progress ◦ 4 Hz/cycle per sec = iLO manual reboot sequence initiated ◦ 8 Hz/cycle per sec = iLO manual reboot sequence in progress • Off = Deactivated
2	NIC status LED [1]	• Solid green = Link to network • Flashing green (1 Hz/cycle per sec) = Network active • Off = No network activity

Item	Description	Status
3	Health LED [1]	• Solid green = Normal • Flashing green (1 Hz/cycle per sec) = iLO is rebooting • Flashing amber = System degraded • Flashing red (1 Hz/cycle per sec) = System critical [2]
4	Power On/Standby button and system power LED [1]	• Solid green = System on • Flashing green (1 Hz/cycle per sec) = Performing power o n sequence • Solid amber = System in standby • Off = No power present [3]

[1] When all four LEDs described in this table flash simultaneously, a power fault has occurred.
[2] If the health LED indicates a degraded or critical state, review the system IML or use iLO to review the system health status.
[3] Facility power is not present, the power cord is not attached, no power supplies are installed, power supply failure has occurred, or the power button cable is disconnected.

UID button functionality

The UID button can be used to display the Server Health Summary when the server will not power on. For more information, see the latest HPE iLO 5 User Guide on the **Hewlett Packard Enterprise website**.

Front panel LED power fault codes

The following table provides a list of power fault codes, and the subsystems that are affected. Not all power faults are used by all servers.

Subsystem	LED behavior
System board	1 flash

Subsystem	LED behavior
Processor	2 flashes
Memory	3 flashes
Riser board PCIe slots	4 flashes
FlexibleLOM	5 flashes
Storage controllers	6 flashes
System board PCIe slots	7 flashes
Power backplane or storage backplane	8 flashes
Power supply	9 flashes

Systems Insight Display LEDs

The Systems Insight Display LEDs represent the system board layout. The display enables diagnosis with the access panel installed.

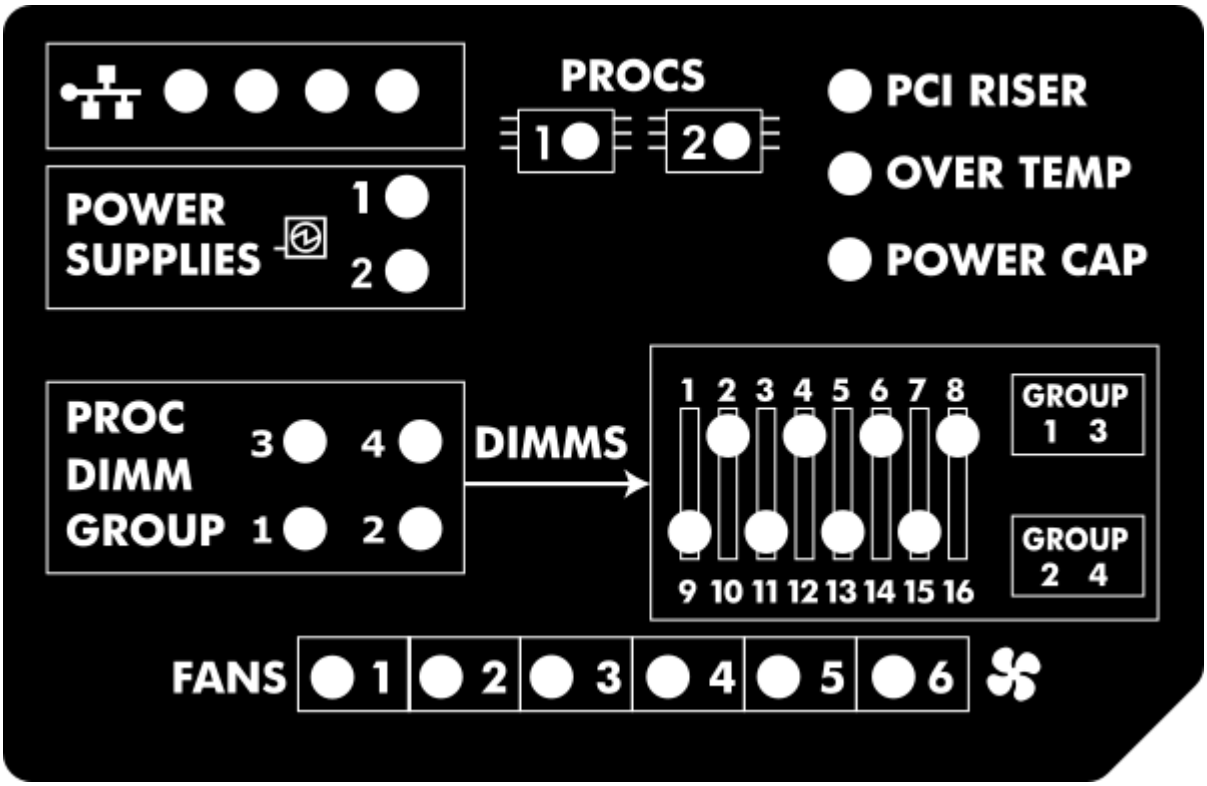

Description	Status
Processor LEDs	• Off = Normal • Amber = Failed processor
DIMM LEDs	• Off = Normal • Amber = Failed DIMM or configuration issue
Fan LEDs	• Off = Normal • Amber = Failed fan or missing fan
NIC LEDs [1]	• Off = No link to network • Solid green = Network link • Flashing green = Network link with activity If power is off, the front panel LED is not active. For status, see Rear panel LEDs.
Power supply LEDs	• Off = Normal • Solid amber = Power subsystem degraded, powe r supply failure, or input power lost
PCI riser LED	• Off = Normal • Amber = Incorrectly installed PCI riser cage
Over temp LED	• Off = Normal • Amber = High system temperature detected
AMP status LED	• Off = AMP modes disabled • Solid green = AMP mode enabled • Solid amber = Failover • Flashing amber = Invalid configuration

Description	Status
Power cap LED	• Off = System is in standby, or no cap is set • Solid green = Power cap applied

[1] For Networking Choice server models, the embedded NIC ports are not equipped on the server. Therefore, the NIC LEDs on the Systems Insight Display will flash based on the FlexibleLOM network port activity. In the case of a dual-port FlexibleLOM, only NIC LED 1 and 2 will illuminate to correspond with the activity of the respective network ports.

When the health LED on the front panel illuminates either amber or red, the server is experiencing a health event. For more information on the combination of these LEDs, see Systems Insight Display combined LED descriptions.

Systems Insight Display combined LED descriptions

The combined illumination of the following LEDs indicates a system condition:

- Systems Insight Display LEDs
- System power LED
- Health LED

Systems Insight Display LED and color	Health LED	System power LED	Status
Processor (amber)	Red	Amber	One or more of the following conditions might exist: • Processor in socket X has failed. • Processor X is not installed in the socket. • Processor X is unsupported. • ROM detects a failed processor during POST.
Processor (amber)	Amber	Green	Processor in socket X is in a pre-failure condition.

Systems Insight Display LED and color	Health LED	System power LED	Status
DIMM (amber)	Red	Green	One or more DIMMs have failed.
DIMM (amber)	Amber	Green	DIMM in slot X is in a pre-failure condition.
Over temp (amber)	Amber	Green	The Health Driver has detected a cautionary temperature level.
Over temp (amber)	Red	Amber	The server has detected a hardware critical temperature level.
PCI riser (amber)	Red	Green	The PCI riser cage is not seated properly.
Fan (amber)	Amber	Green	One fan has failed or has been removed.
Fan (amber)	Red	Green	Two or more fans have failed or been removed.
Power supply (amber)	Red	Amber	One or more of the following conditions might exist: • Only one power supply is installed and that power supply is in standby. • Power supply fault. • System board fault.
Power supply (amber)	Amber	Green	One or more of the following conditions might exist: • Redundant power supply is installed and only one power supply is functional. • AC power cord is not plugged into redundant power supply. • Redundant power supply fault. • Power supply mismatch at POST or power supply mismatch through hot-plug addition.
Power cap (off)	—	Amber	Standby.
Power cap (green)	—	Flashing green	Waiting for power.
Power cap (green)	—	Green	Power is available.
Power cap (flashing amber)	—	Amber	Power is not available.

IMPORTANT: If more than one DIMM slot LED is illuminated, further troubleshooting is required. Test each bank of DIMMs by removing all other DIMMs. Isolate the failed DIMM by replacing each DIMM in a bank with a known working DIMM.

Rear panel components

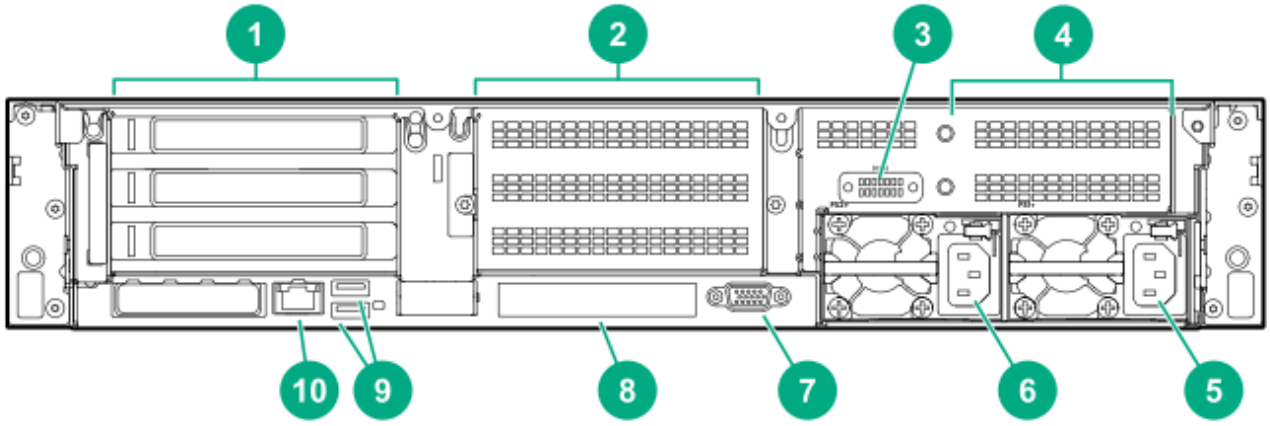

Item	Description
1	Primary riser slots 1–3 (optional drive cage)
2	Optional secondary riser slots 4–6 (optional drive cage)
3	Serial port (optional) [1]
4	Optional tertiary riser slots 7–8 (optional drive cage)
5	Power supply 1
6	Power supply 2
7	Video port
8	OCP NIC 3.0 slot
9	USB 3.1 Gen1 connectors (2)
10	Dedicated iLO management port

[1] When a secondary or tertiary riser cage is installed as shown, the serial port can be installed in the riser slot 8.

Rear panel LEDs

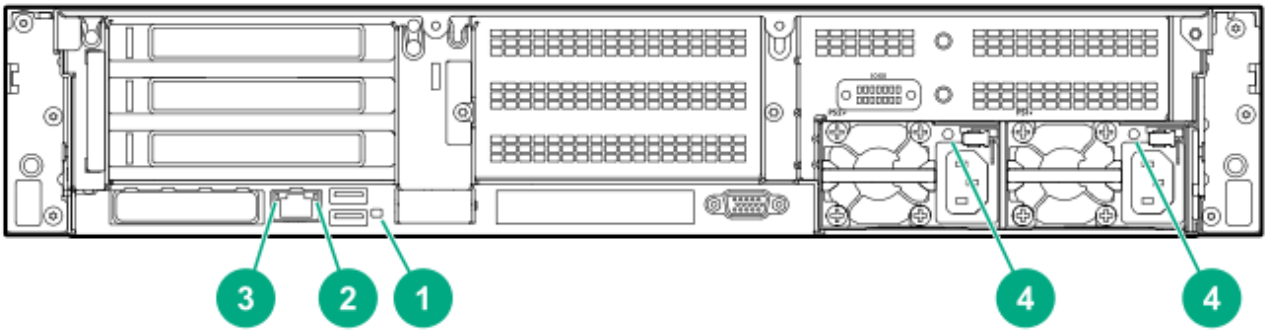

Item	Description	Status
1	UID LED	• Off = Deactivated • Solid blue = Activated • Flashing blue = System is being managed remotely
2	Status LED	• Off = No network activity • Solid green = Link to network • Flashing green = Network activity
3	Link LED	• Off = No network link • Green = Network link
4	Power supply LEDs	• Off = System is off or power supply has failed • Solid green = Normal

System board components

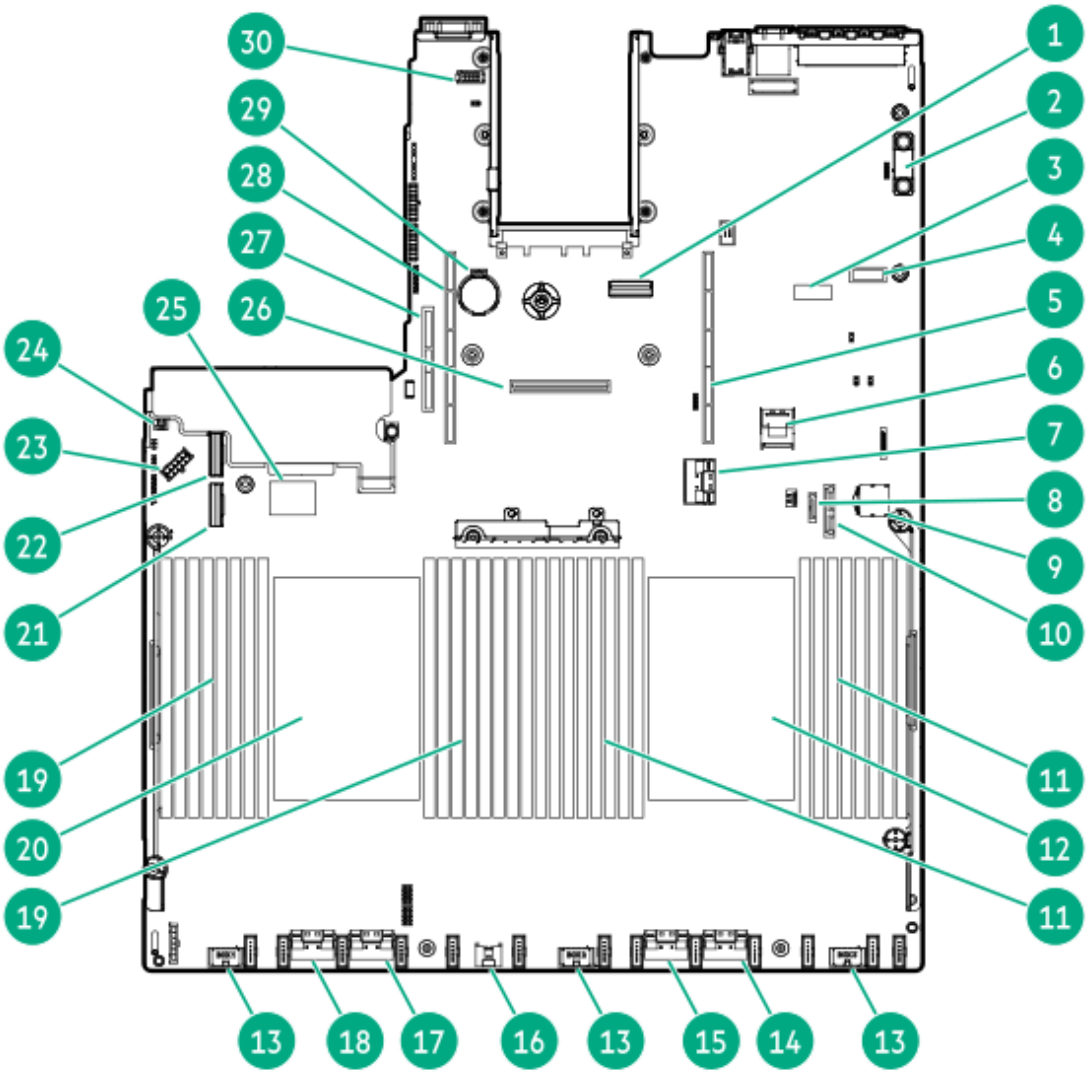

Item	Description
1	OCP X16 Slimline Connector
2	TPM connector
3	System maintenance switch
4	Display port/USB connector
5	Primary (processor 1) PCIe riser connector

Item	Description
6	x2 SATA port 1
7	NVMe port 8A
8	x1 SATA port 2
9	Front power/USB 3.1 Gen1 connector
10	Optical/SATA port 3
11	DIMMs
12	Processor 1
13	Drive backplane power connectors
14	NVMe port 2A
15	NVMe port 1A
16	Energy Pack connector
17	NVMe port 2B
18	NVMe port 1B
19	DIMMs
20	Processor 2
21	NVMe port 1C
22	NVMe port 2C
23	Drive backplane power connector
24	Chassis Intrusion Detection connector
25	Dual USB port
26	Flexible Smart Array connector
27	Tertiary (processor 2) PCI riser connector
28	Secondary (processor 2) PCIe riser connector
29	System battery
30	Serial port connector

System maintenance switch descriptions

Position	Default	Function
S1 [1]	Off	• Off = iLO security is enabled. • On = iLO security is disabled.
S2	Off	Reserved
S3	Off	Reserved
S4	Off	Reserved
S5	Off	• Off = Power-on password is enabled. • On = Power-on password is disabled.
S6 [2], [3]	Off	• Off = No function • On = Restore default manufacturing settings
S7	Off	Reserved
S8	—	Reserved
S9	—	Reserved
S10	—	Reserved
S11	—	Reserved
S12	—	Reserved

[1] To access the redundant ROM, set S1, S5, and S6 to On.
[2] When the system maintenance switch position 6 is set to the On position, the system is prepared to restore all configuration settings to their manufacturing defaults.
[3] When the system maintenance switch position 6 is set to the On position and Secure Boot is enabled, some configurations cannot be restored. For more information, see Secure Boot .

DIMM label identification

To determine DIMM characteristics, see the label attached to the DIMM. The information in this section helps you to use the label to locate specific information about the DIMM.

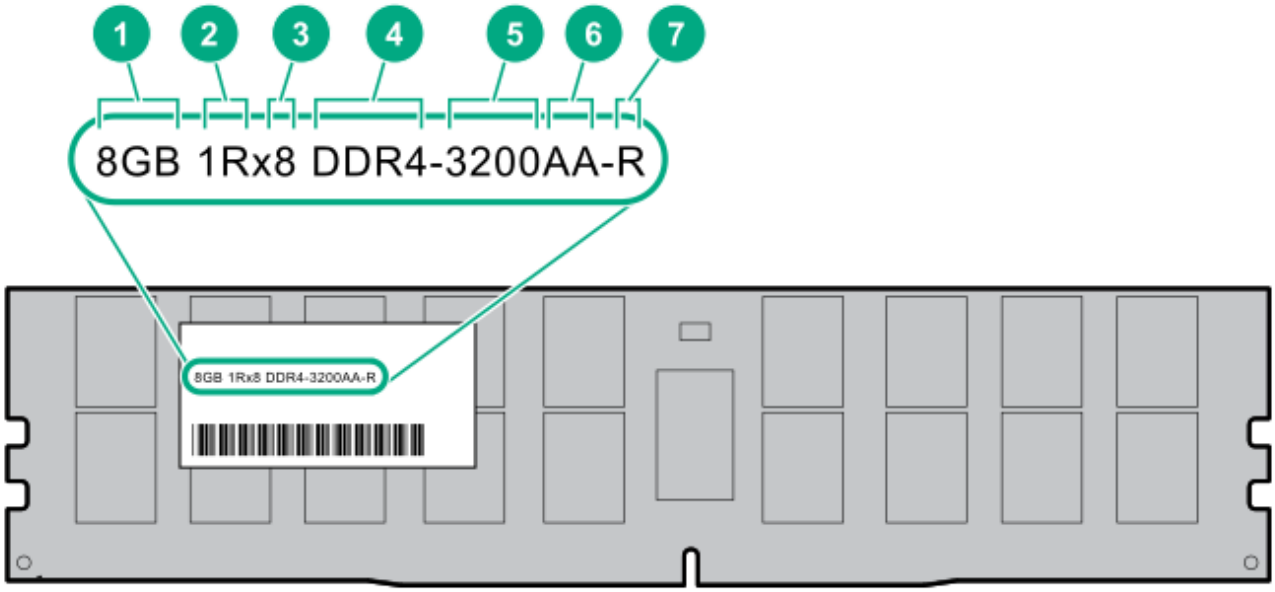

Item	Description	Example
1	Capacity	8 GB 16 GB 32 GB 64 GB 128 GB 256 GB
2	Rank	1R = Single rank 2R = Dual rank 4R = Quad rank 8R = Octal rank
3	Data width on DRAM	x4 = 4-bit x8 = 8-bit
4	Memory generation	PC4 = DDR4
5	Maximum memory speed	3200 MT/s
6	CAS latency	AA = CAS 22-22-22

Item	Description	Example
		AA = CAS 26-22-22 (for 3DS LRDIMM)
7	DIMM type	R = RDIMM (registered) L = LRDIMM (load reduced)

For more information about product features, specifications, options, configurations, and compatibility, see the HPE DDR4 SmartMemory QuickSpecs on the Hewlett Packard Enterprise website (**https://www.hpe.com/support/DDR4SmartMemoryQS**).

DIMM slot locations

DIMM slots are numbered sequentially (1 through 16) for each processor. The supported AMP modes use the letter assignments for population guidelines.



Processor and socket components

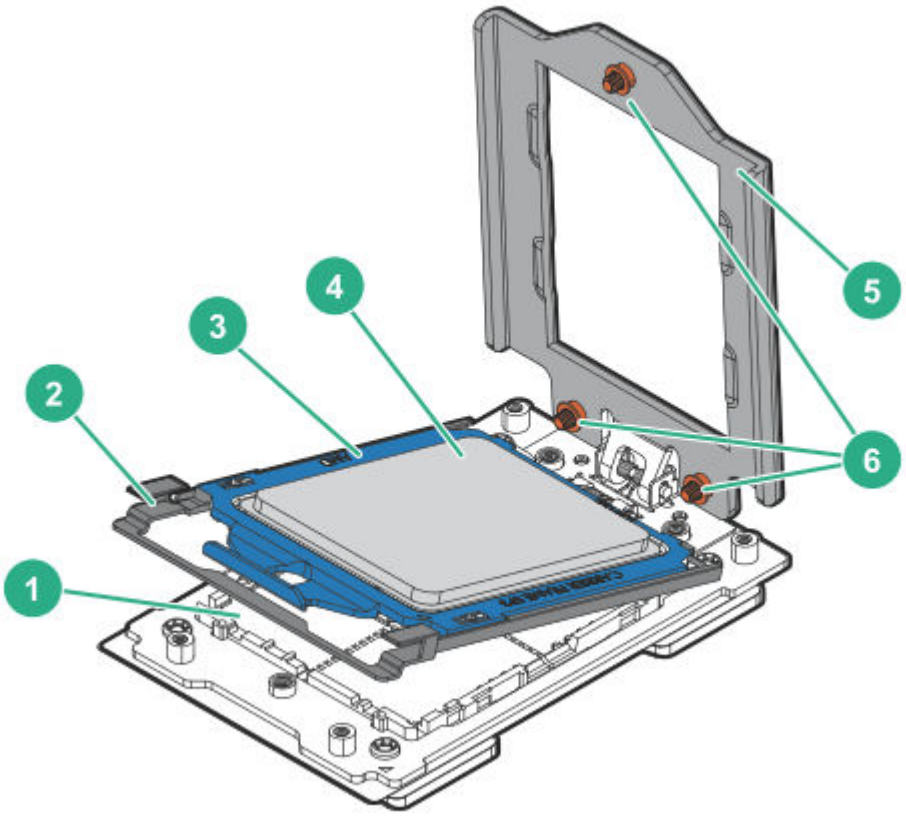

Item	Description
1	Pin field
2	Rail frame
3	Carrier frame
4	Processor
5	Force frame
6	Captive screws (Torx T-20)

Drive box identification

Front boxes

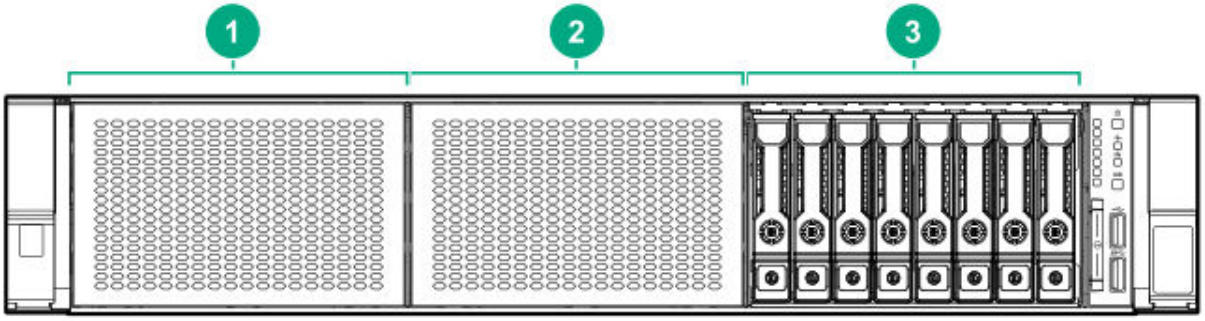

Item	Description
1	Box 1
2	Box 2
3	Box 3

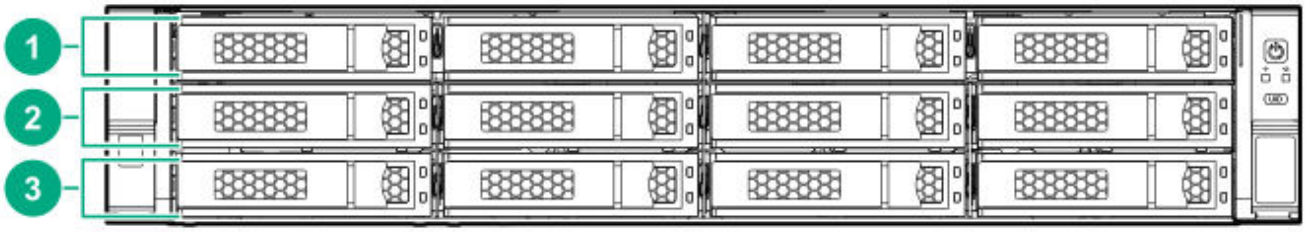

Item	Description
1	Box 1
2	Box 2
3	Box 3

Rear boxes

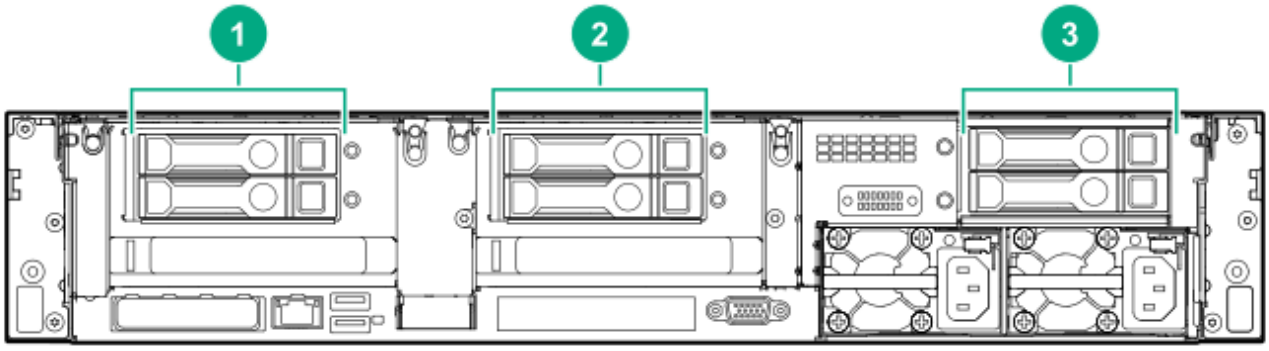

Item	Description
1	Box 4
2	Box 5
3	Box 6

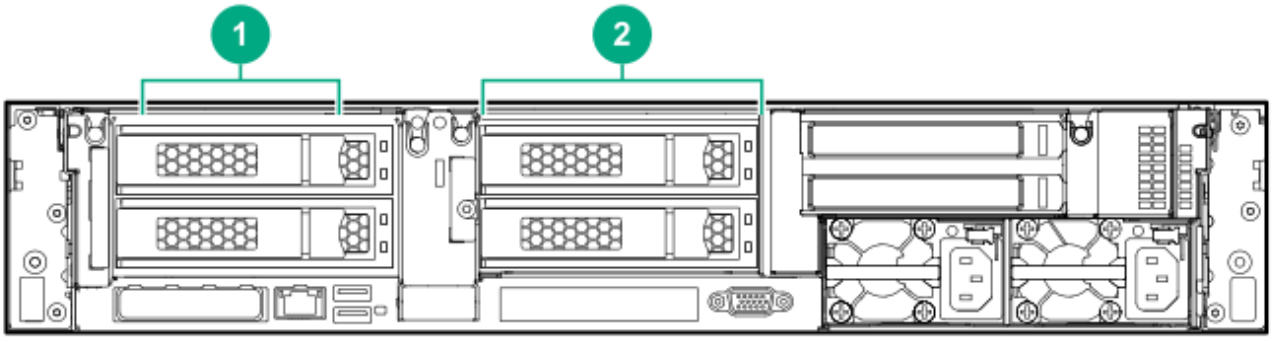

Item	Description
1	Box 4
2	Box 5

Midplane box (LFF)

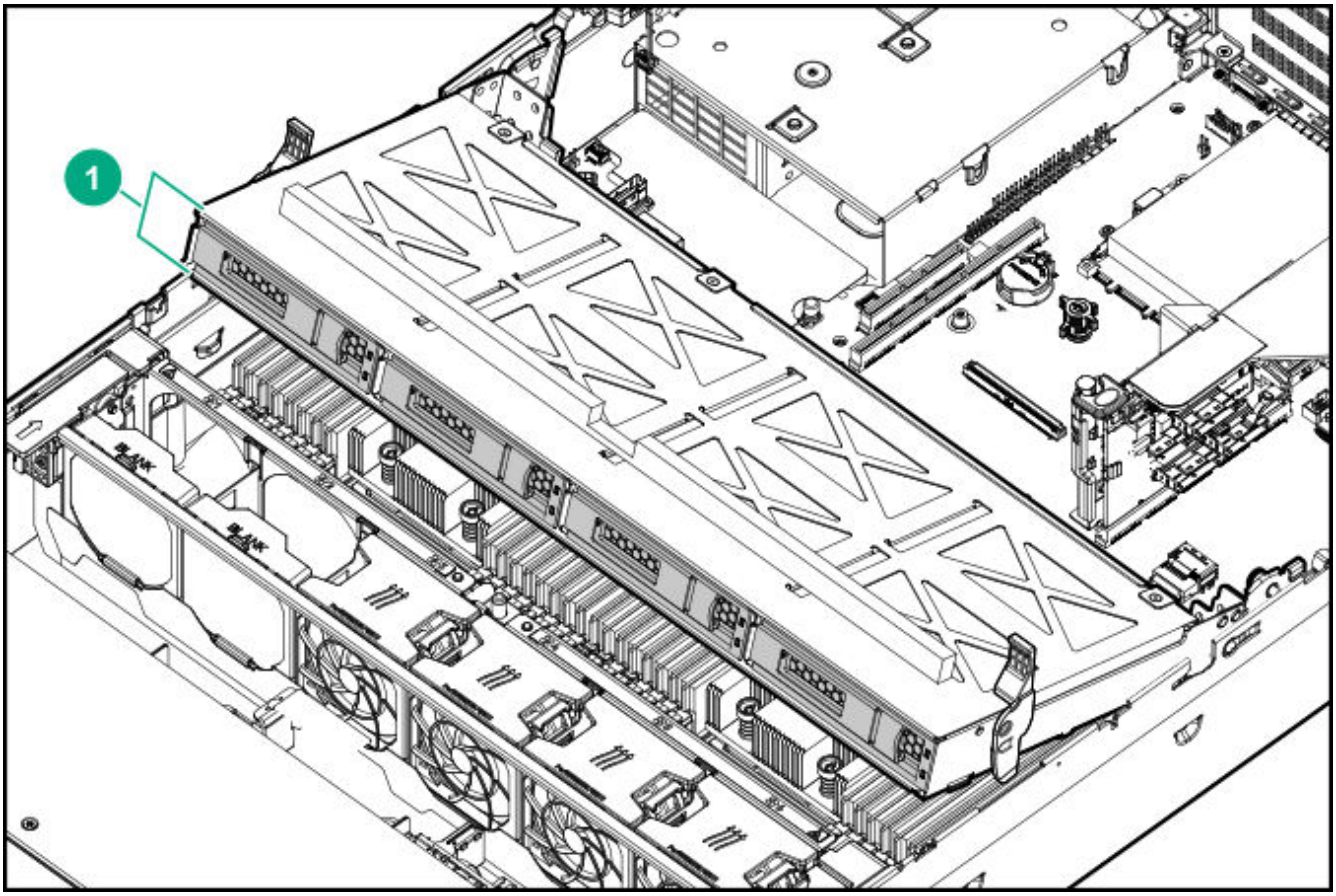

Item	Description
1	Box 7

Midplane box (SFF)

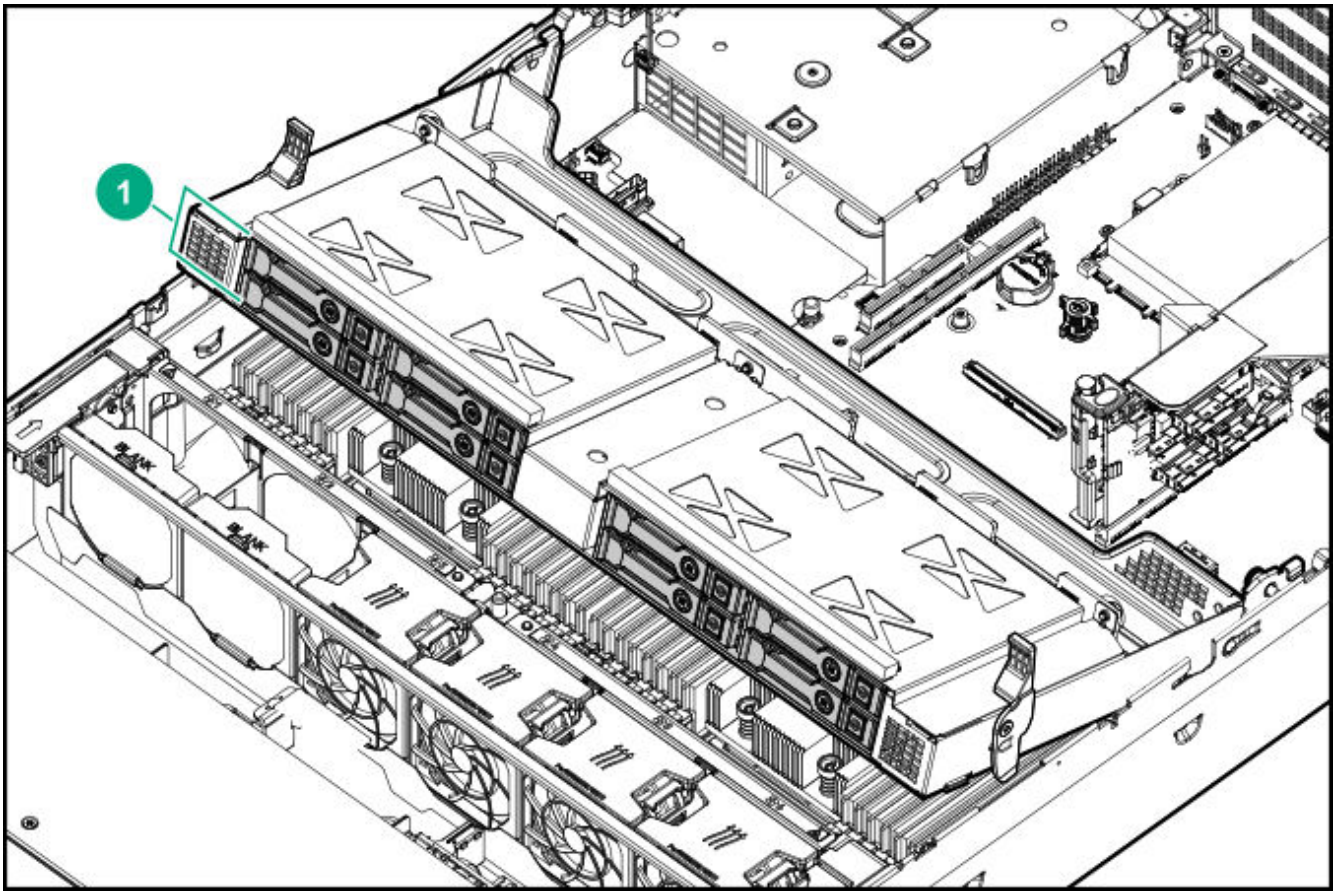

Item	Description
1	Box 7

Drive bay numbering

Drive bay numbering depends on how the drive backplanes are connected:

- To a controller:
  - Embedded controllers use the onboard SATA ports.
  - Type-a controllers install to the type-a smart array connector.
  - Type-p controllers install to a PCIe riser.
- To a SAS expander:

Installs in the primary or secondary PCIe riser

Drive bay numbering: Smart Array controller

When the drive backplane is connected directly to a storage controller, then each drive box starts at 1. The following images are examples of common configurations.

24 SFF



12 LFF

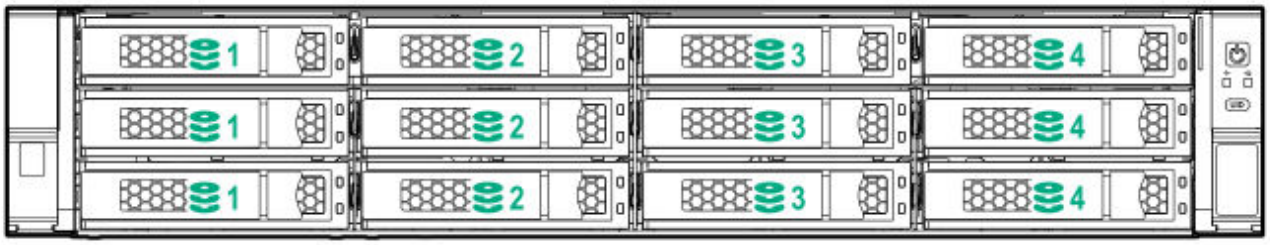

6 SFF rear panel

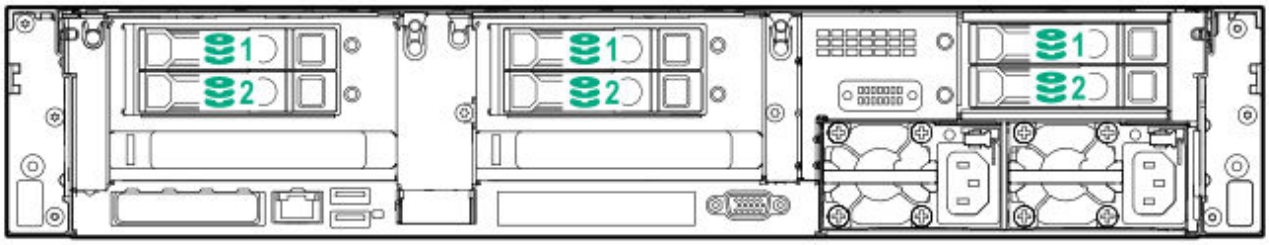

2x 2 LFF rear panel

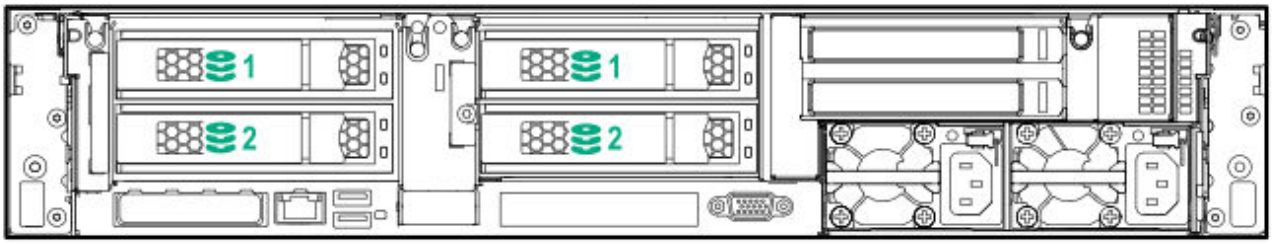

Universal media bay

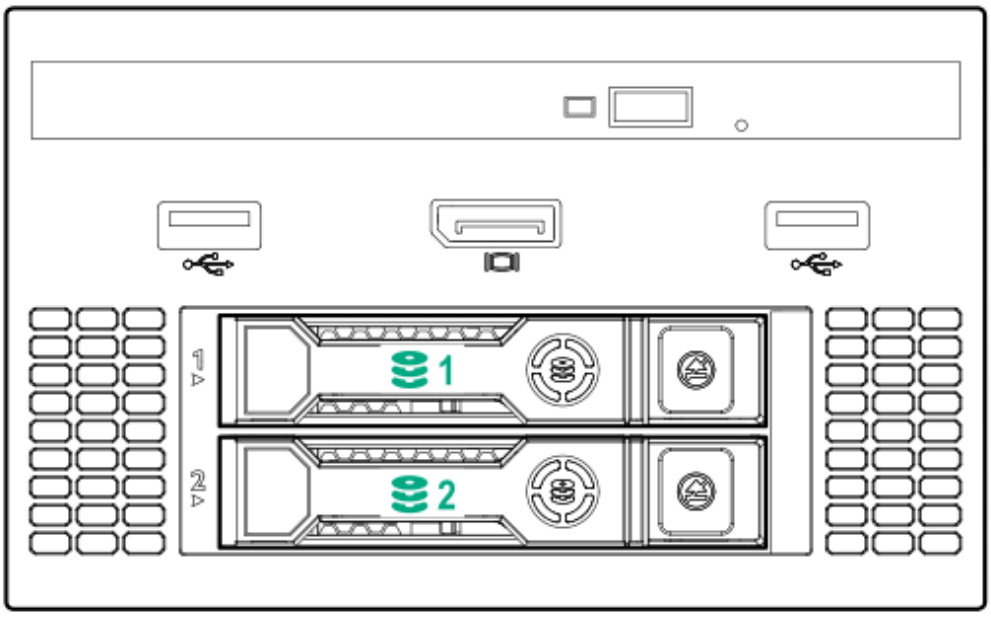

8 LFF + Universal media bay, optional 2 SFF, and optical drive

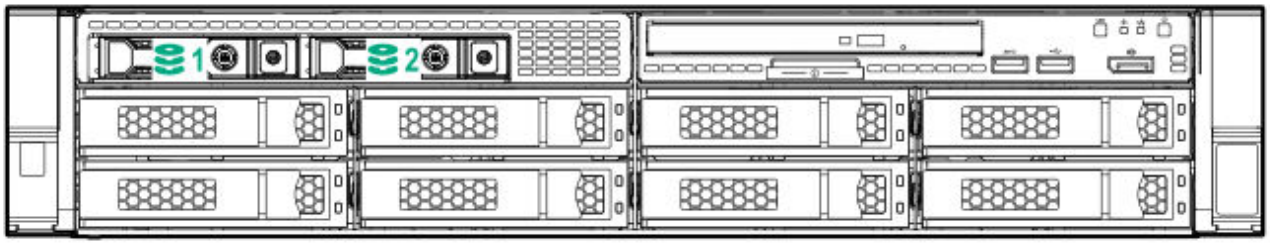

Midplane box LFF

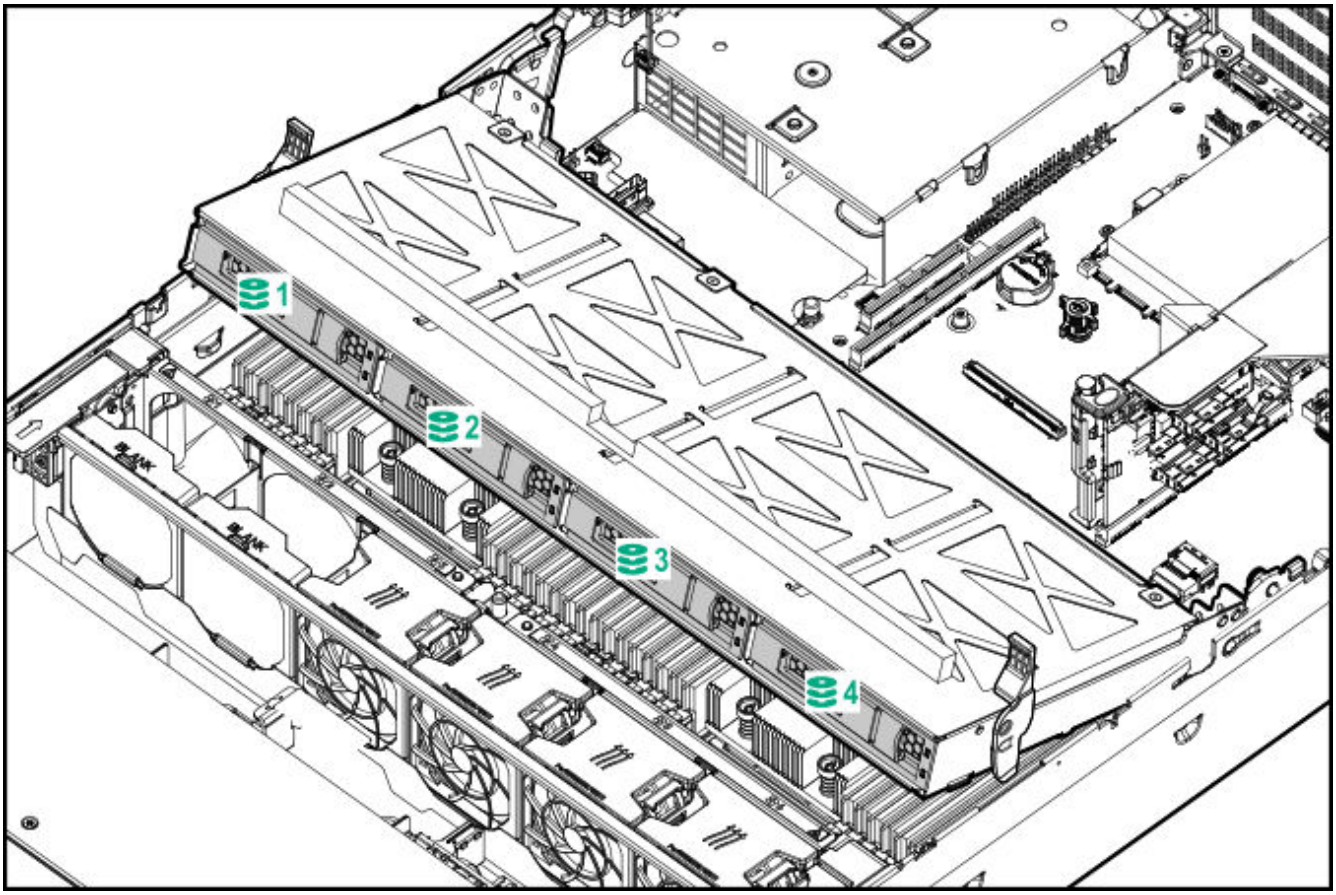

Midplane box SFF

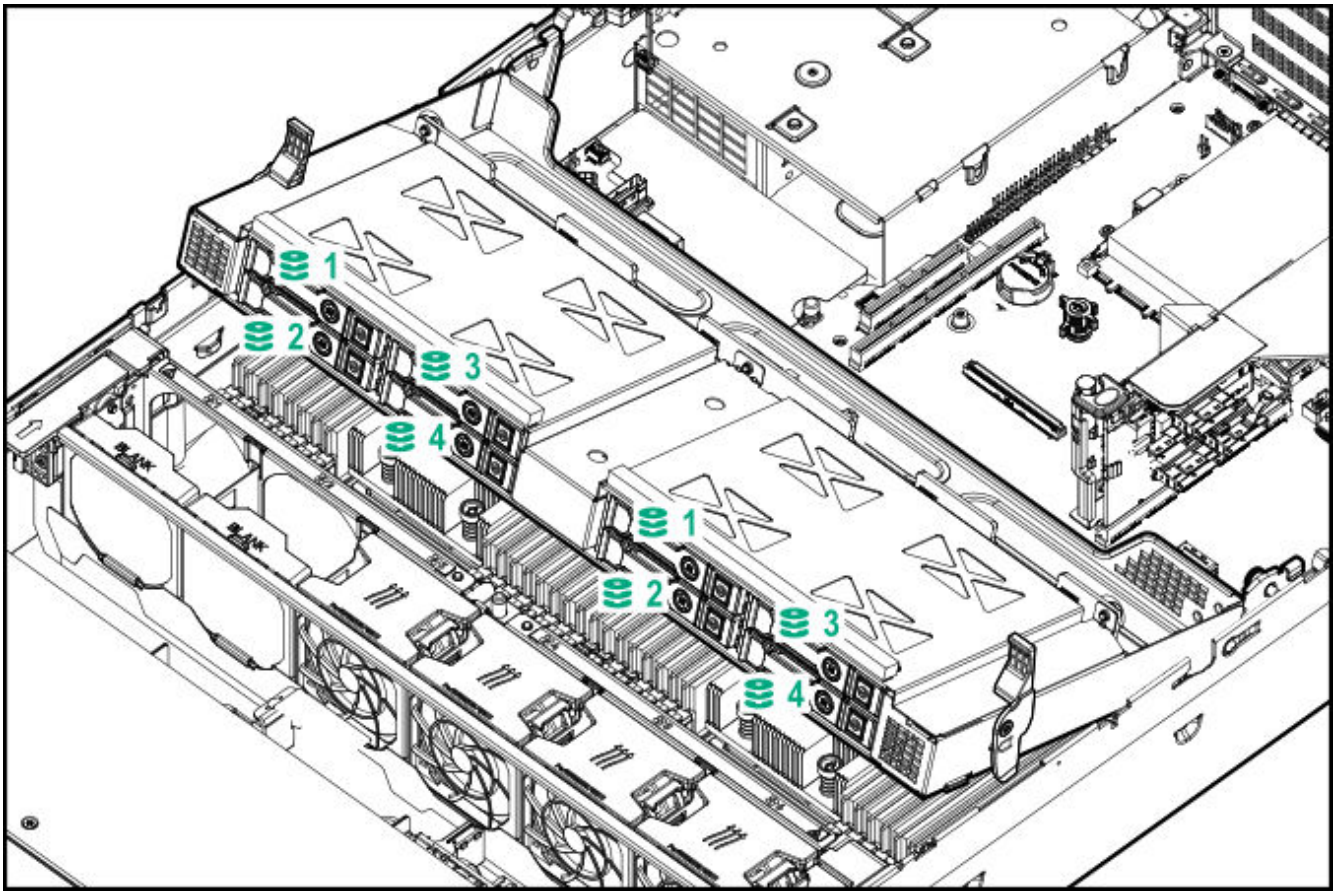

Drive bay numbering: SAS expander

Drive numbering through a SAS Expander is continuous:

- SAS expander port 1 always connects to port 1 of the controller.
- SAS expander port 2 always connects to port 2 of the controller.
- SAS expander port 3 = drive numbers 1 to 4.
- SAS expander port 4 = drive numbers 5 to 8.
- SAS expander port 5 = drive numbers 9 to 12.
- SAS expander port 6 = drive numbers 13 to 16.
- SAS expander port 7 = drive numbers 17 to 20.
- SAS expander port 8 = drive numbers 21 to 24.

- SAS expander port 9 = drive numbers 25 to 28.

Common configuration examples:

NVMe drives



When any stacked 2 SFF drive cage is connected to the SAS expander, the drive numbering skips the second number. For example, when a rear 2 SFF drive cage is connected to SAS expander port 9, then the drive numbers are 25 and 27.

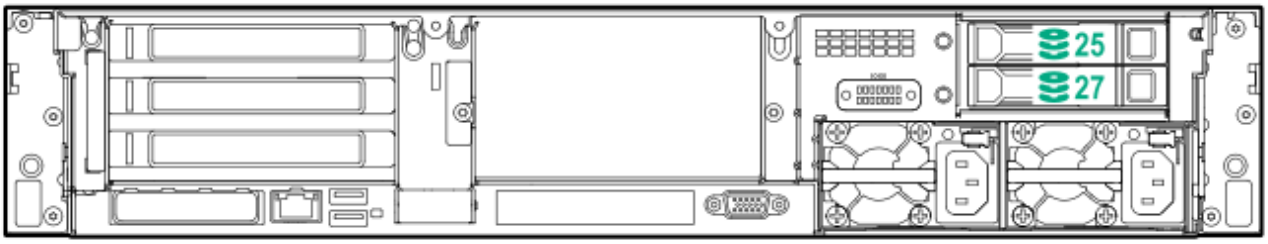

When the front 24 SFF bays are populated, any installed rear 2 SFF drives are always 25 and 27.

Universal media bay

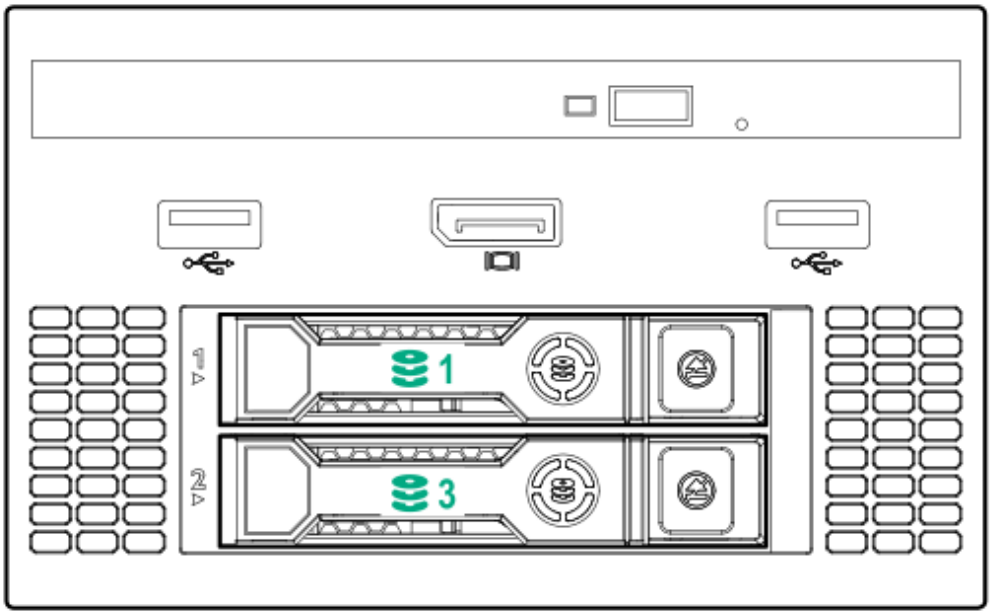

If a 2 SFF drive cage is connected to SAS expander port 3, then the drive numbers are 1 and 3.

8 LFF front panel

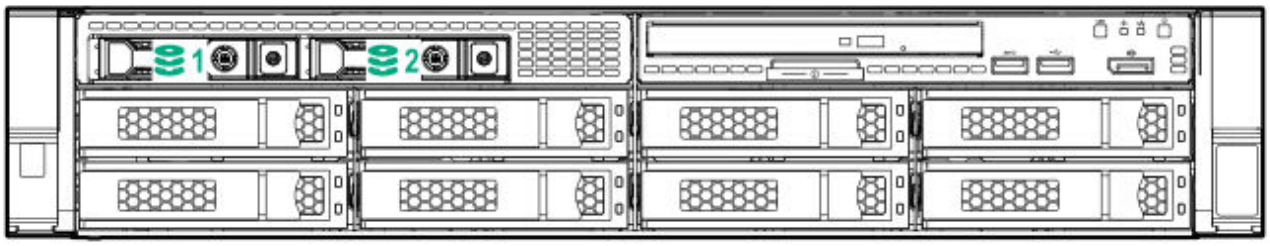

12 LFF front panel

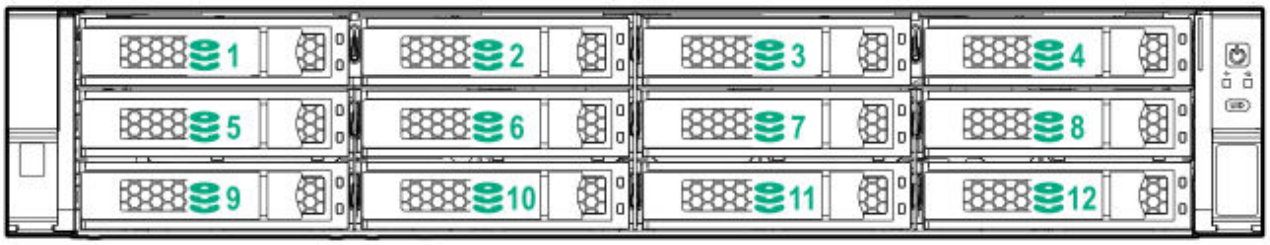

Midplane box (LFF)

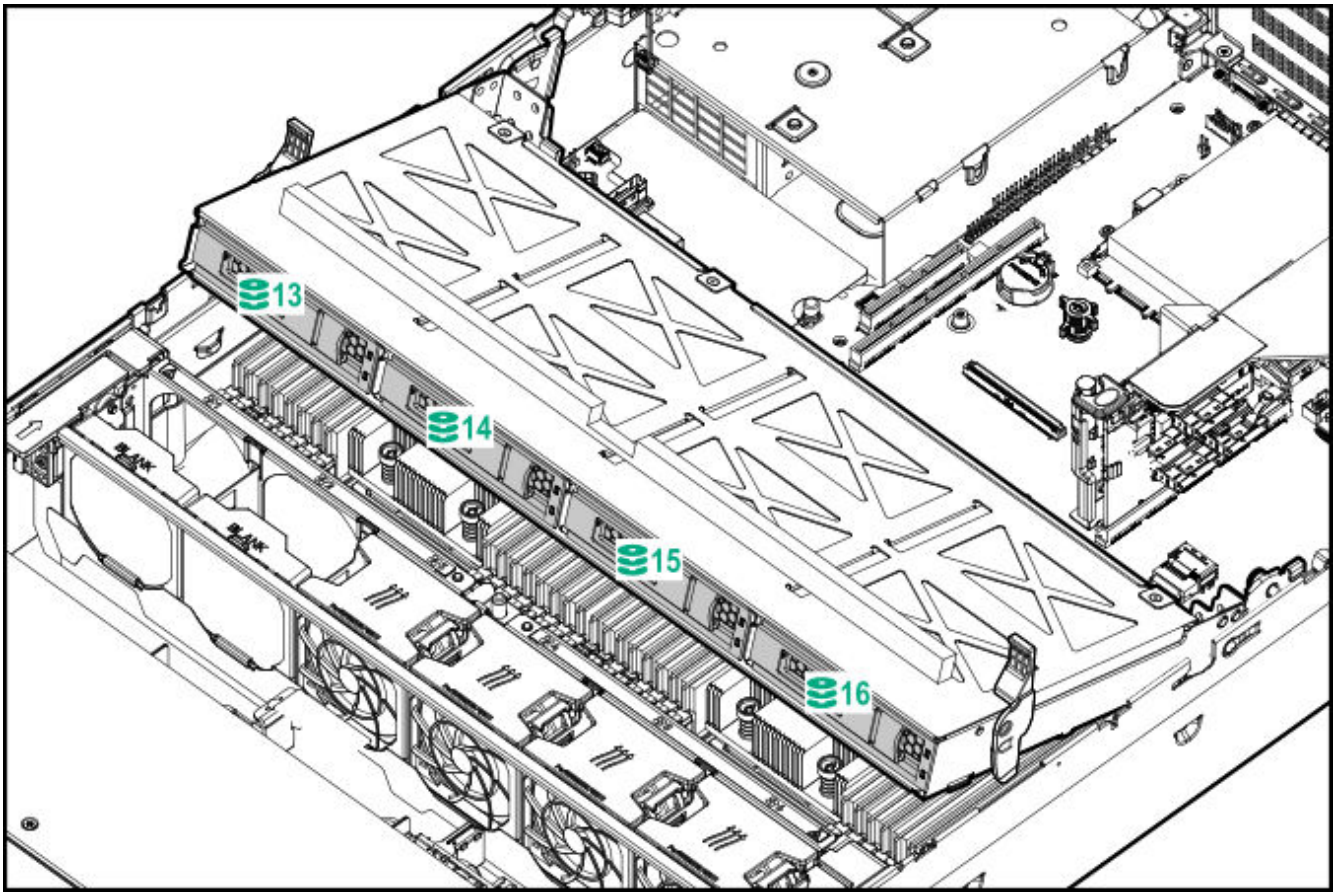

Midplane box (SFF)

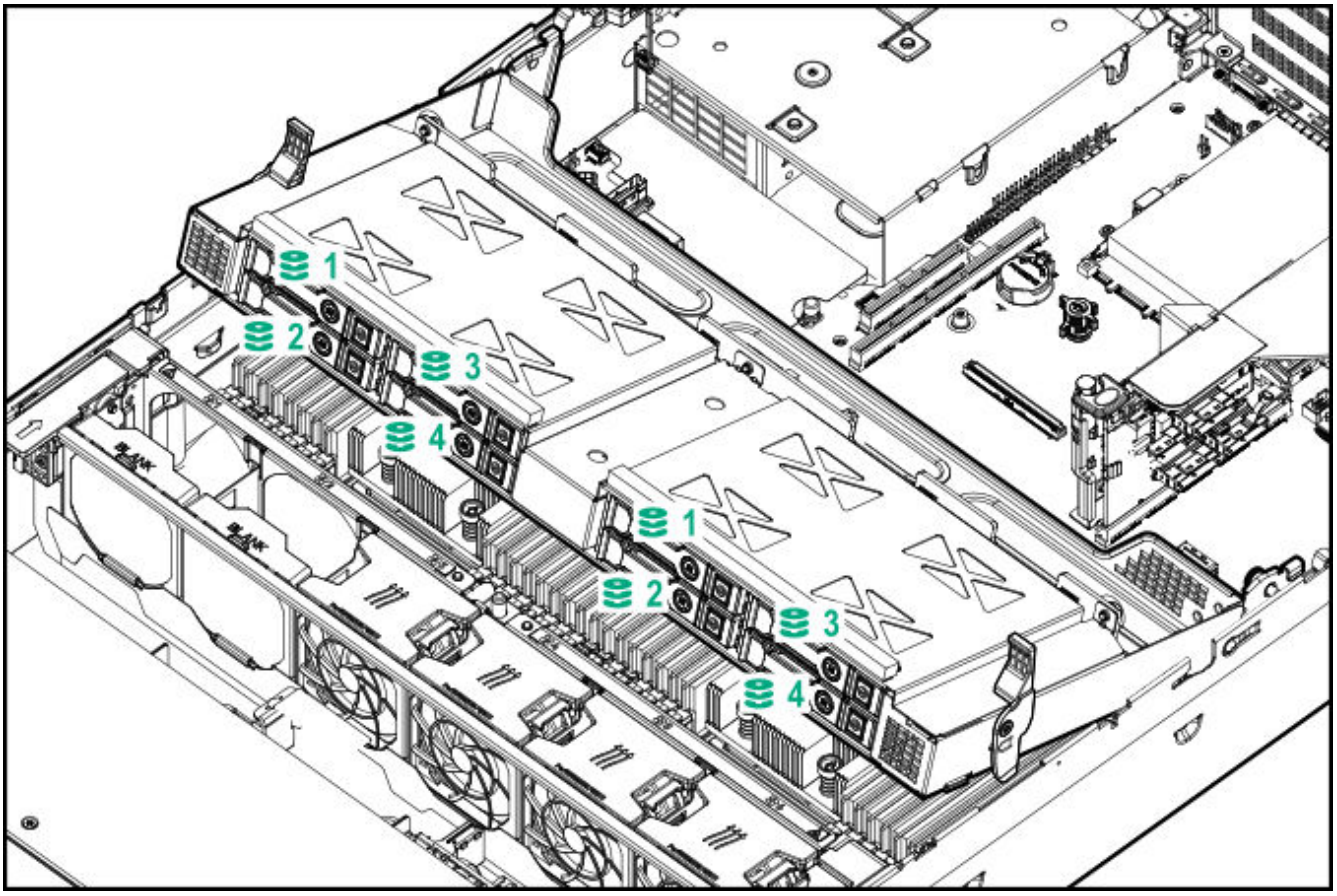

Front 12 LFF + Midplane 4 LFF + All rear 2 SFF

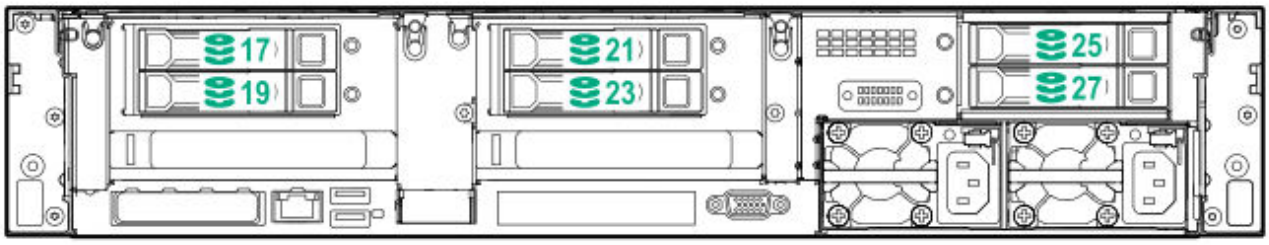

Drive bay numbering: NVMe drives

Server populated with NVMe drives and NVMe risers



Drives

LFF drive LED definitions

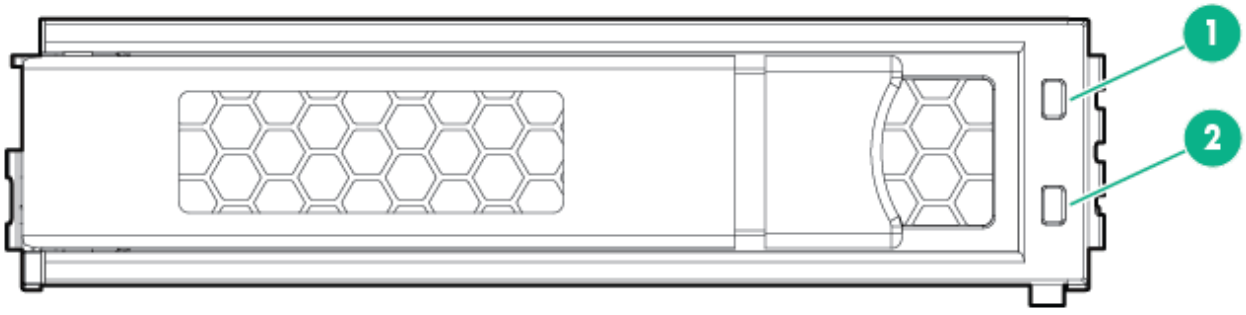

Item	LED	Status	Definition
1	Fault/Locate	Solid amber	The drive has failed, is unsup ported, or is invalid.
		Solid blue	The drive is operating normall y and is being identified by a management application.
		Flashing amber/blue (1 Hz)	The drive has failed, or a predi ctive failure alert has been rec eived for this drive; it also has been identified by a managem ent application.
		Flashing amber (1Hz)	A predictive failure alert has been received for this drive. Re place the drive as soon as poss ible.
2	Online/Activi ty	Solid green	The drive is online and has no activity.
		Flashing green (4Hz)	The drive is operating normall y and has activity.
		Flashing green (1Hz)	The drive is rebuilding, RAID migration, stripe size migration , capacity expansion, logical dr ive extension, erasing, or spare activation.
		Off	The drive is not configured by a RAID controller or a spare dri ve.

HPE SmartDrive

This HPE SmartDrive carrier supports SAS, SATA, and NVMe drives.

Drive LEDs

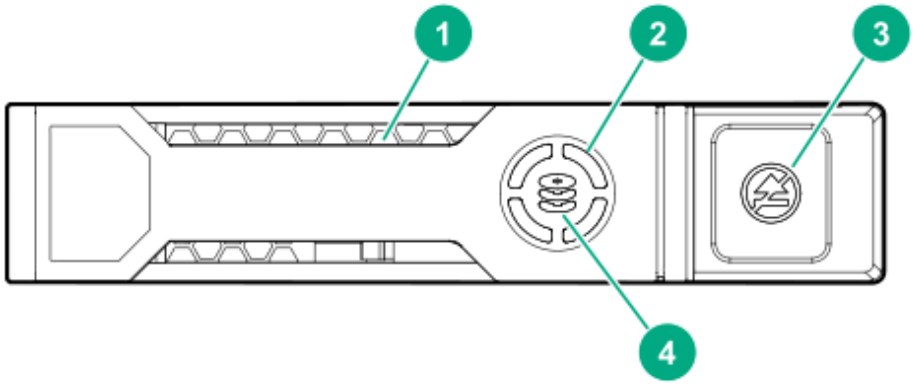

Item	Description	Status
1	Locate	• Solid blue = The drive is being identified by a host application. • Flashing blue = The drive carrier firmware is being updated or requires an update.
2	Activity ring	• Rotating green = Drive activity. • Off = No drive activity.
3	Do not remove	• Solid white = Do not remove the drive. Removing the drive causes one or more of the logical drives to fail. • Off = Removing the drive does not cause a logical drive to fail.
4	Drive status	• Solid green = The drive is a member of one or more logical drives. • Flashing green = The drive is doing one of the following: ◦ Rebuilding or performing a RAID migration ◦ Performing a strip size migration ◦ Performing a capacity expansion ◦ Performing a logical drive extension ◦ Erasing • Flashing amber/green = The drive is a member of one or more logical drives and predicts the drive will fail. • Flashing amber = The drive is not configured and predicts the drive will fail.

Item	Description	Status
		• Solid amber = The drive has failed, is unsupported, or is i nvalid. • Off = The drive is not configured by a RAID controller or a spare drive.

Components

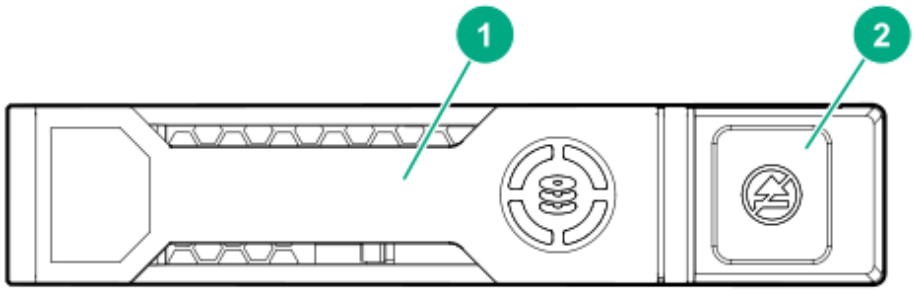

Item	Description	Definition
1	Drive handle	• Pull the open handle to remove a drive. • Close the handle to fully seat and lock a drive into place.
2	Handle release button	Releases the drive handle for removal and insertion.

DSC-25 2-port SFP28 card ports and LEDs

Ports

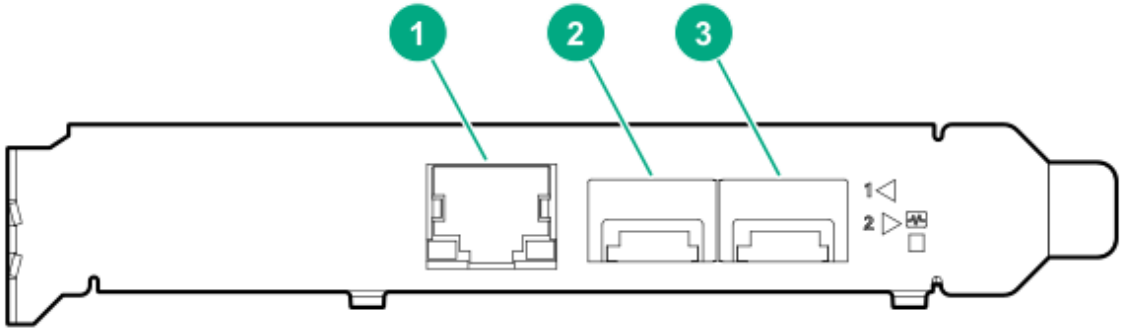

Table 1: Ports

Item	Port	Description
1	Management port	1GbE RJ45
2	Network interface port	10/25G SFP+ based
3	Network interface port	10/25G SFP+ based

LEDs

The HPE for Pensando DSP DSC-25 2p SFP28 card is a dual-port, single-slot, half-height, half-length (HHHL) SFP28 network adapter. It has LEDs for Link (L) and Activity (A) for each port. A half-height bracket is shown in the following illustration with SFP28 ports and LEDs.

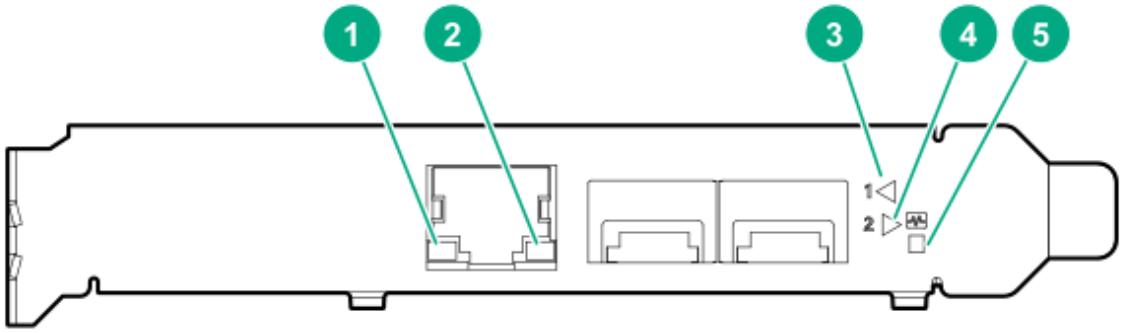

Table 2: LED indicators

Item	LED	Status	Description
1	Management Port Activity LED	Off	No activity
		Flashing	Passing traffic; flashing frequency indicates traffic intensity
2	Management Port Link LED	Off	A link has not been established
		Solid green	Valid Ethernet link
3	SFP Port 1 Link/ Activity LED	Off	A link has not been established
		Solid green	Valid Ethernet link
		Flashing green	Passing traffic; flashing frequency indicates traffic intensity
		Solid amber	Link fault
4	SFP Port 2 Link/ Activity LED	Off	A link has not been established
		Solid green	Valid Ethernet link
		Flashing green	Passing traffic; flashing frequency indicates traffic intensity
		Solid amber	Link fault
5	System status LED	Off	System is not powered
		Solid amber	Power is up, software has not booted yet
		Solid green	System is up and fully operational

HPE NS204i-p NVMe OS Boot Device components

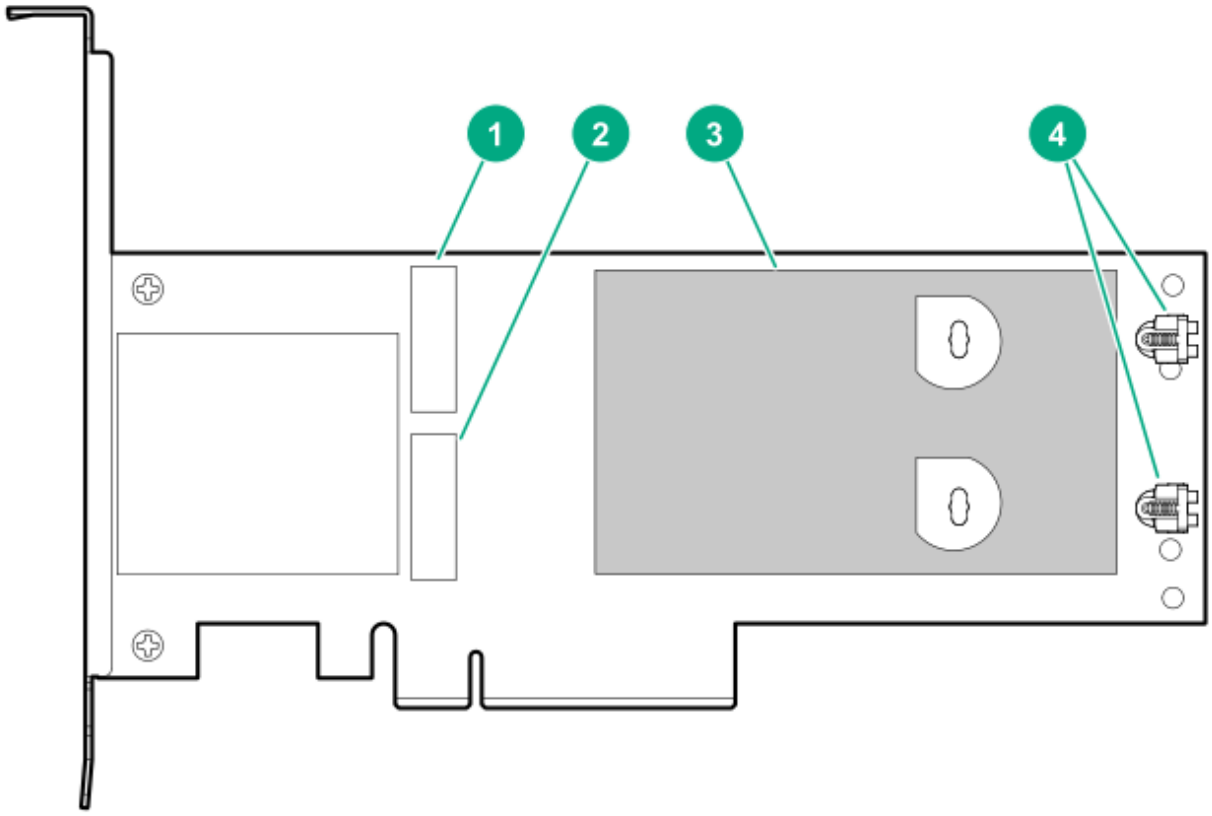

Item	Description
1	Drive bay 1
2	Drive bay 2
3	Thermal interface pad with removable liner
4	M.2 drive retaining latches

HPE NS204i-p NVMe OS Boot Device LED definitions

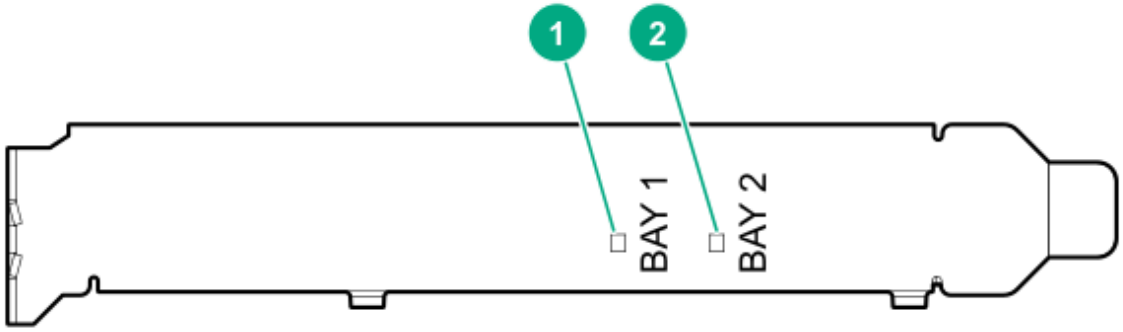

Item	Description	Fault LED status
1	Bay 1 LED	Off: Normal
2	Bay 2 LED	Flashing 1Hz: Drive predictive failure Amber: Drive failure

Fan bay numbering

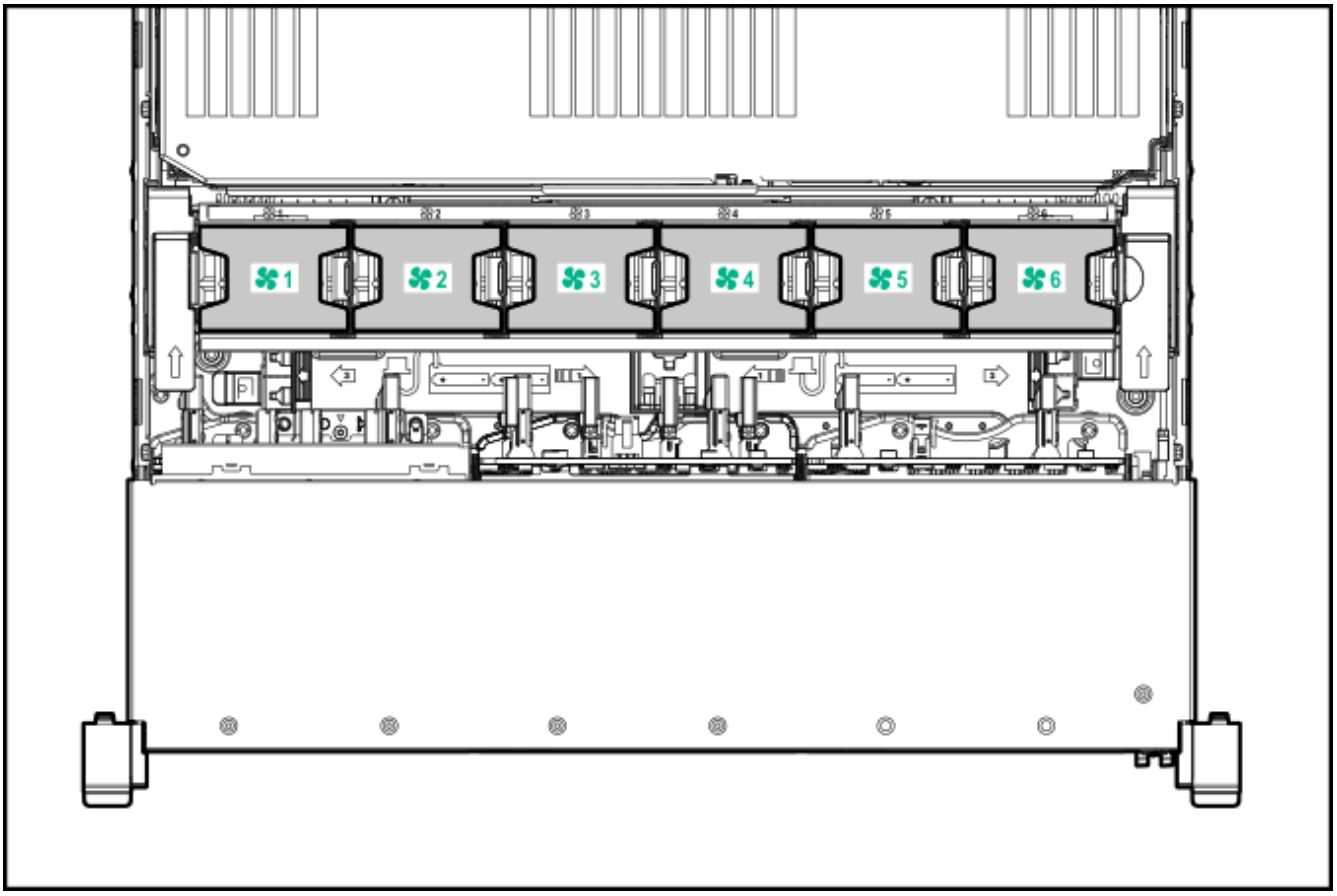

Operations

Power up the server

To power up the server, use one of the following methods:

- Press the Power On/Standby button.
- Use the virtual power button through iLO.

Power down the server

Before powering down the server for any upgrade or maintenance procedures, perform a backup of critical server data and programs.

IMPORTANT:
When the server is in standby mode, auxiliary power is still being provided to the system.

To power down the server, use one of the following methods:

- Press and release the Power On/Standby button.
  This method initiates a controlled shutdown of applications and the OS before the server enters standby mode.
- Press and hold the Power On/Standby button for more than 4 seconds to force the server to enter standby mode.
  This method forces the server to enter standby mode without properly exiting applications and the OS. If an application stops responding, you can use this method to force a shutdown.
- Use a virtual power button selection through iLO.
  This method initiates a controlled remote shutdown of applications and the OS before the server enters standby mode.

Before proceeding, verify that the server is in standby mode by observing that the system power LED is amber.

Extending the server from the rack

WARNING: To reduce the risk of personal injury or equipment damage, be sure that the rack is adequately stabilized before extending anything from the rack.

Procedure

Pull down the quick release levers on each side of the server, and then extend the server from the rack.

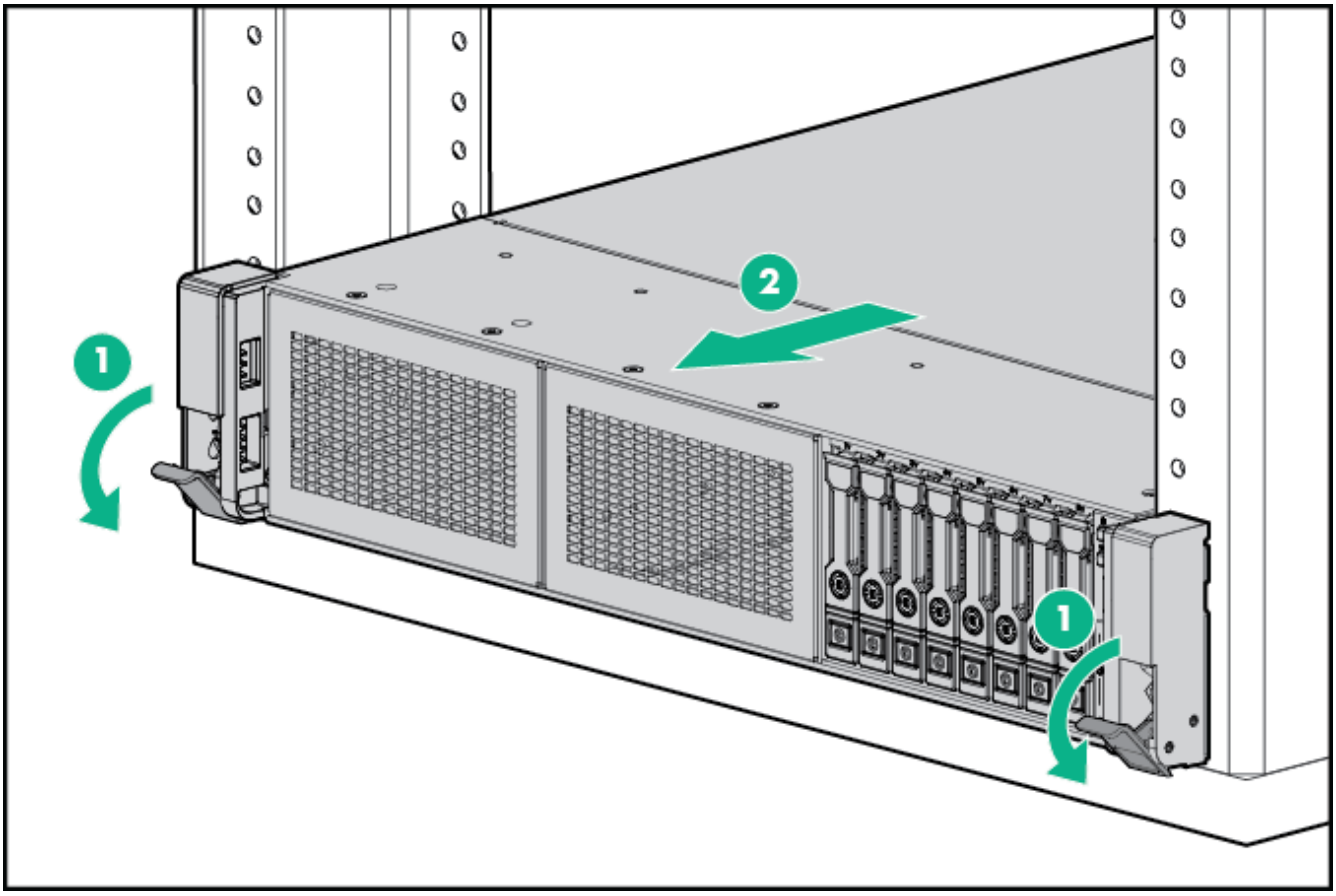

Secure cables using the cable management arm

For rack rail installation instructions, see the documentation that ships with the rack rails.

WARNING: To reduce the risk of electric shock, fire, or damage to the equipment:

- Do not insert wrong connectors into ports.
- Do not disable the power cord grounding plug. The grounding plug is an important safety feature.
- Plug the power cord into a grounded (earthed) electrical outlet that is easily accessible at all times.
- Unplug the power cord from the power supply to disconnect power to the equipment.
- Do not route the power cord where it can be walked on or pinched by items placed against it. Pay particular attention to the plug, electrical outlet, and the point where the cord extends from the server.

Procedure

1. After the server is racked, connect any peripheral devices to the server.

   To identify components, see Rear panel components.

2. At the rear of the server, plug in the power cord to the power supply.
3. Install the power cord anchors.

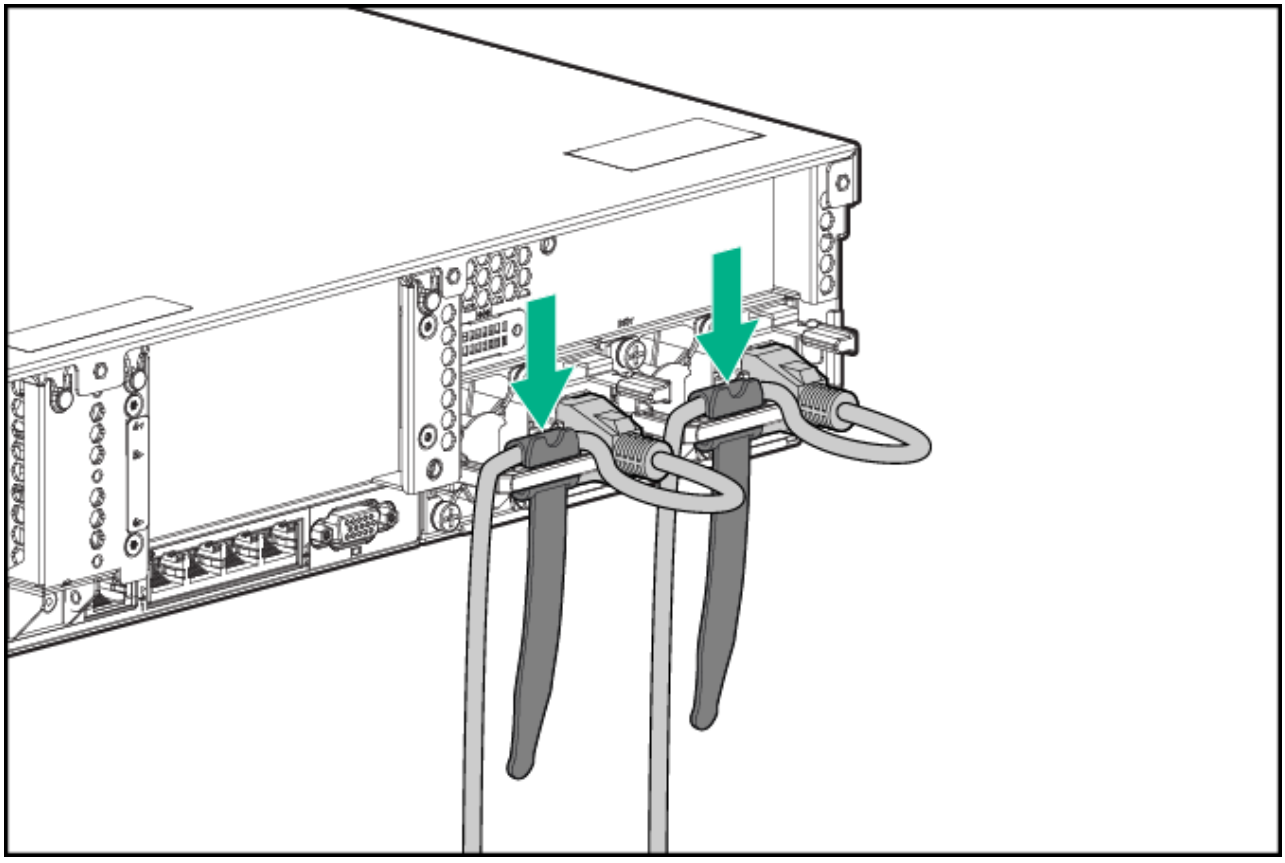

4. Secure the cables to the cable management arm.

> **IMPORTANT:** Leave enough slack in each of the cables to prevent damage to the cables when the server is extended from the rack.

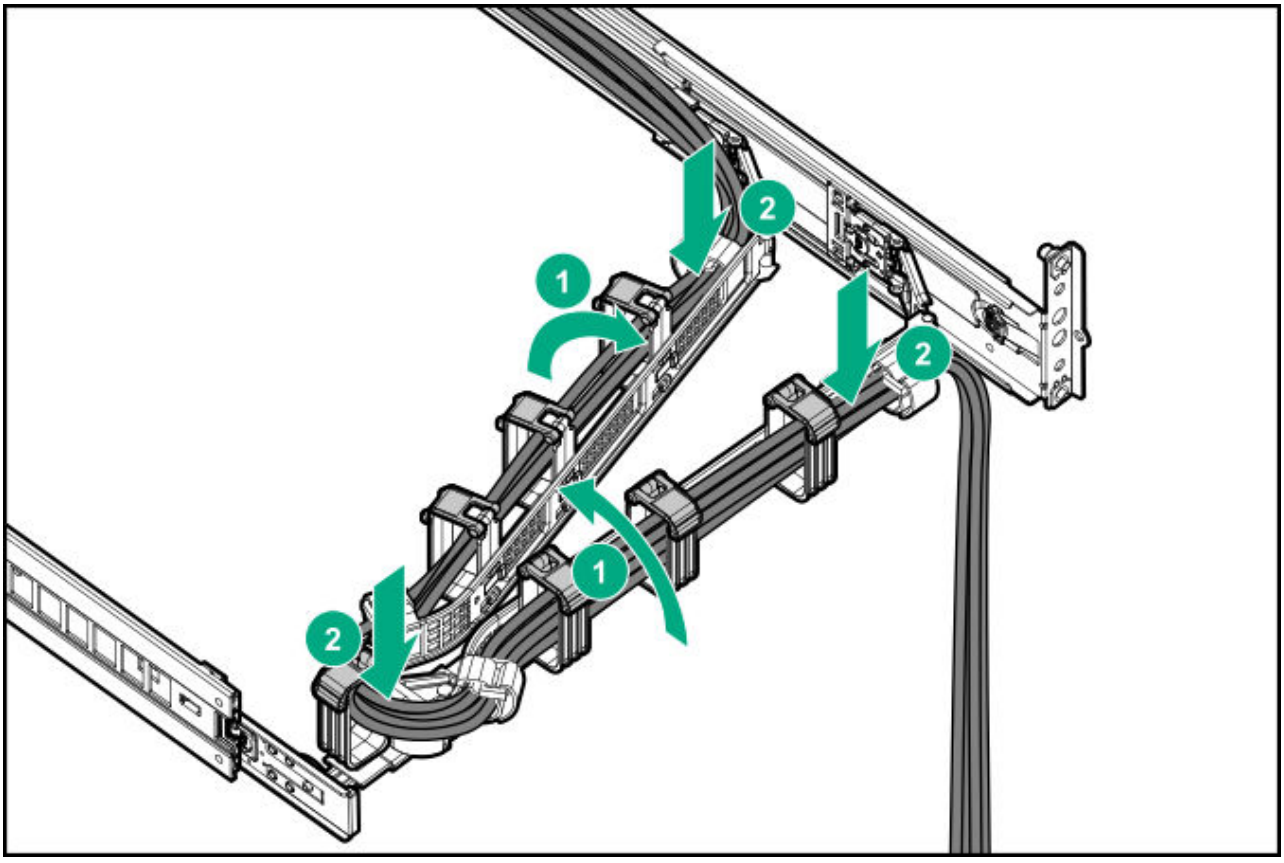

5. Connect the power cord to the AC power source.

Removing the server from the rack

To remove the server from a Hewlett Packard Enterprise, Compaq-branded, Telco, or third-party rack:

Procedure

1. Power down the server.
2. Extend the server from the rack.
3. Disconnect the cabling and remove the server from the rack.

   For more information, see the documentation that ships with the rack mounting option.
4. Place the server on a sturdy, level surface.

Remove the access panel

WARNING: To reduce the risk of personal injury from hot surfaces, allow the drives, power supplies, and internal system components to cool before touching them.

CAUTION:

Do not operate the chassis for long periods with the access panel open or removed. Operating the chassis in this manner results in improper airflow and improper cooling that can lead to thermal damage.

Procedure

1. Power down the server.
2. Extend the server from the rack.
3. Open or unlock the locking latch, slide the access panel to the rear of the chassis, and remove the access panel.

Install the access panel

Procedure

1. Place the access panel on top of the server with the latch open.

   Allow the panel to extend past the rear of the server approximately 1.25 cm (0.5 in).
2. Push down on the latch.

   The access panel slides to a closed position.
3. Tighten the security screw on the latch, if needed.

Removing the fan cage

CAUTION:

Do not operate the server for long periods with the access panel open or removed. Operating the server in this manner results in improper airflow and improper cooling that can lead to thermal damage.

IMPORTANT: For optimum cooling, install fans in all primary fan locations.

Procedure

1. Power down the server.
2. Do one of the following:
   - Disconnect each power cord from the power source.
   - Disconnect each power cord from the server.
3. Do one of the following:
   - Extend the server from the rack.
   - Remove the server from the rack.
4. Remove the access panel.
5. Remove the air baffle.
6. Remove the fan cage.

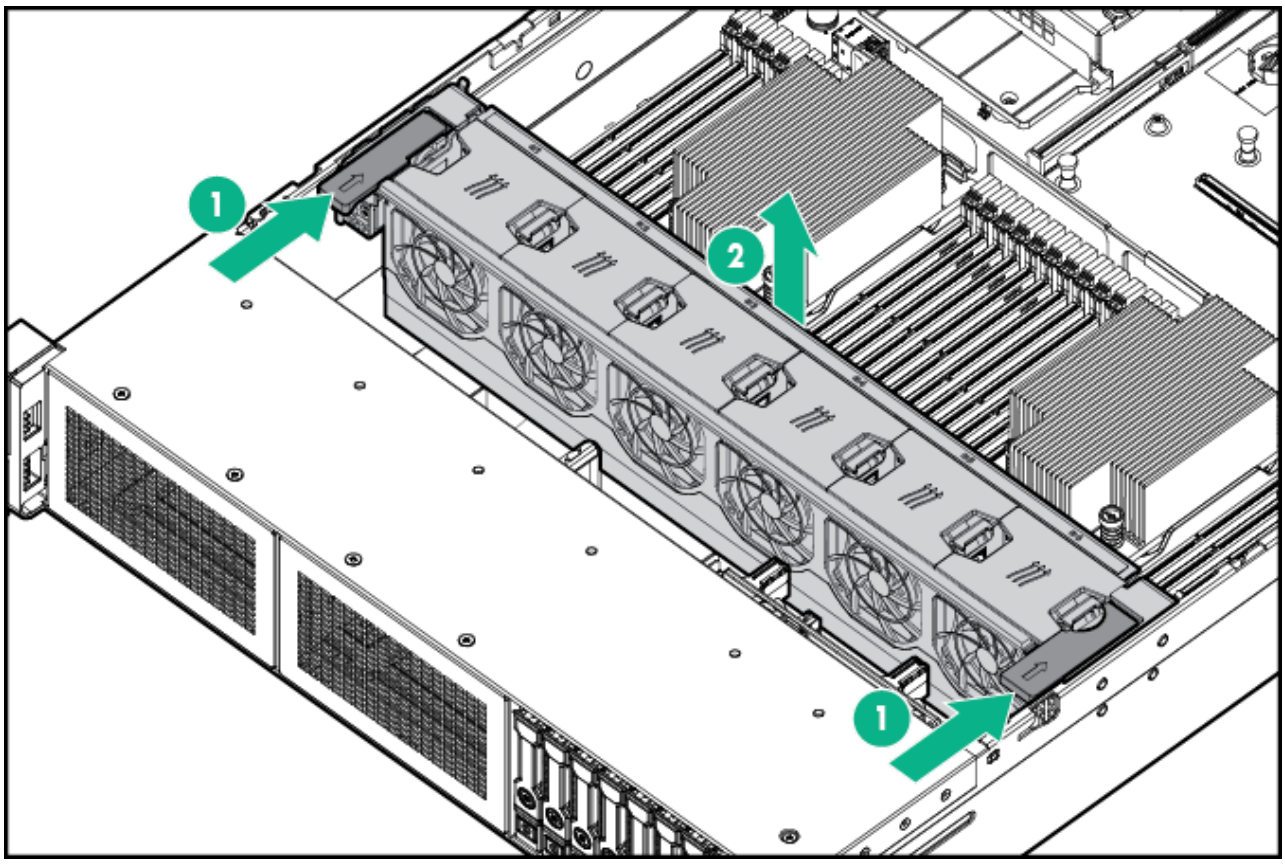

Installing the fan cage

CAUTION:
Do not operate the server for long periods with the access panel open or removed. Operating the server in this manner results in improper airflow and improper cooling that can lead to thermal damage.

IMPORTANT: For optimum cooling, install fans in all primary fan locations.

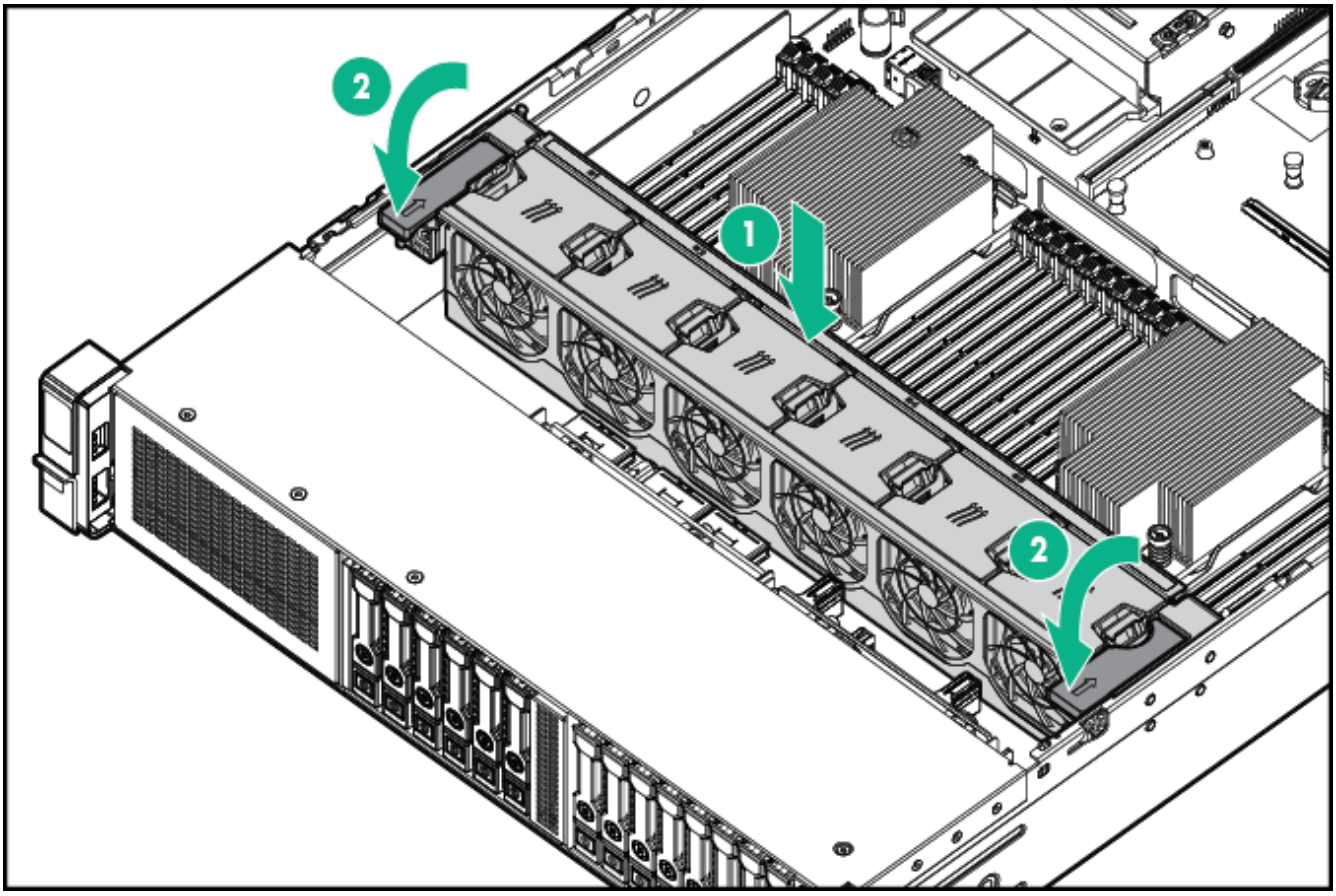

Removing the air baffle or midplane drive cage

CAUTION: Do not detach the cable that connects the battery pack to the cache module. Detaching the cable causes any unsaved data in the cache module to be lost.

CAUTION: For proper cooling, do not operate the server without the access panel, baffles, expansion slot covers, or blanks installed. If the server supports hot-plug components, minimize the amount of time the access panel is open.

Procedure

1. Power down the server.
2. Remove all power:
   a. Disconnect each power cord from the power source.

b. Disconnect each power cord from the server.

3. Do one of the following:

   - Extend the server from the rack.
   - Remove the server from the rack.

4. Remove the access panel.

5. Do one of the following:

   - Remove the air baffle.

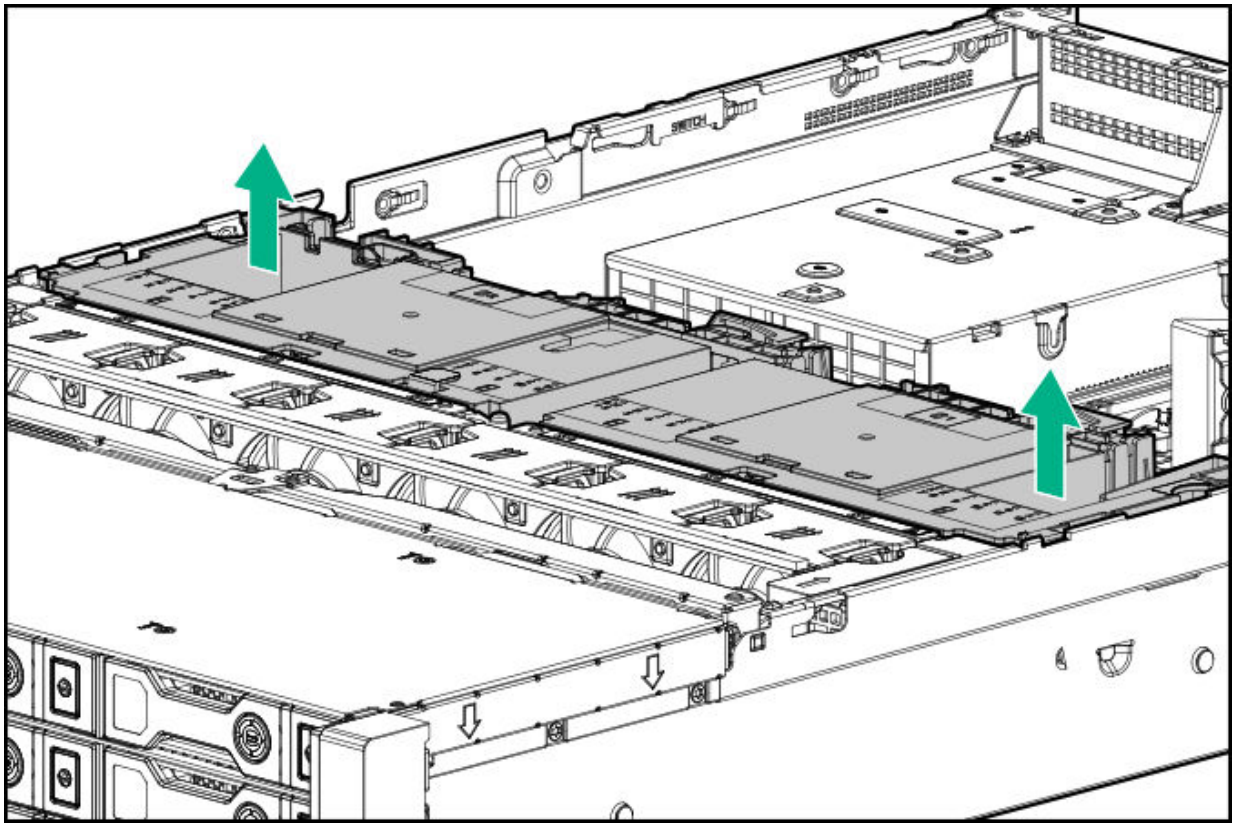

   - Remove the 4LFF midplane drive cage:

     a. Disconnect all cables.

     b. Remove all drives.
     Be sure to note the location of each drive.

     c. Remove the drive cage.

CAUTION: Do not drop the drive cage on the system board. Dropping the drive cage on the system board might damage the system or components. Remove all drives and use two hands when installing or removing the drive cage.

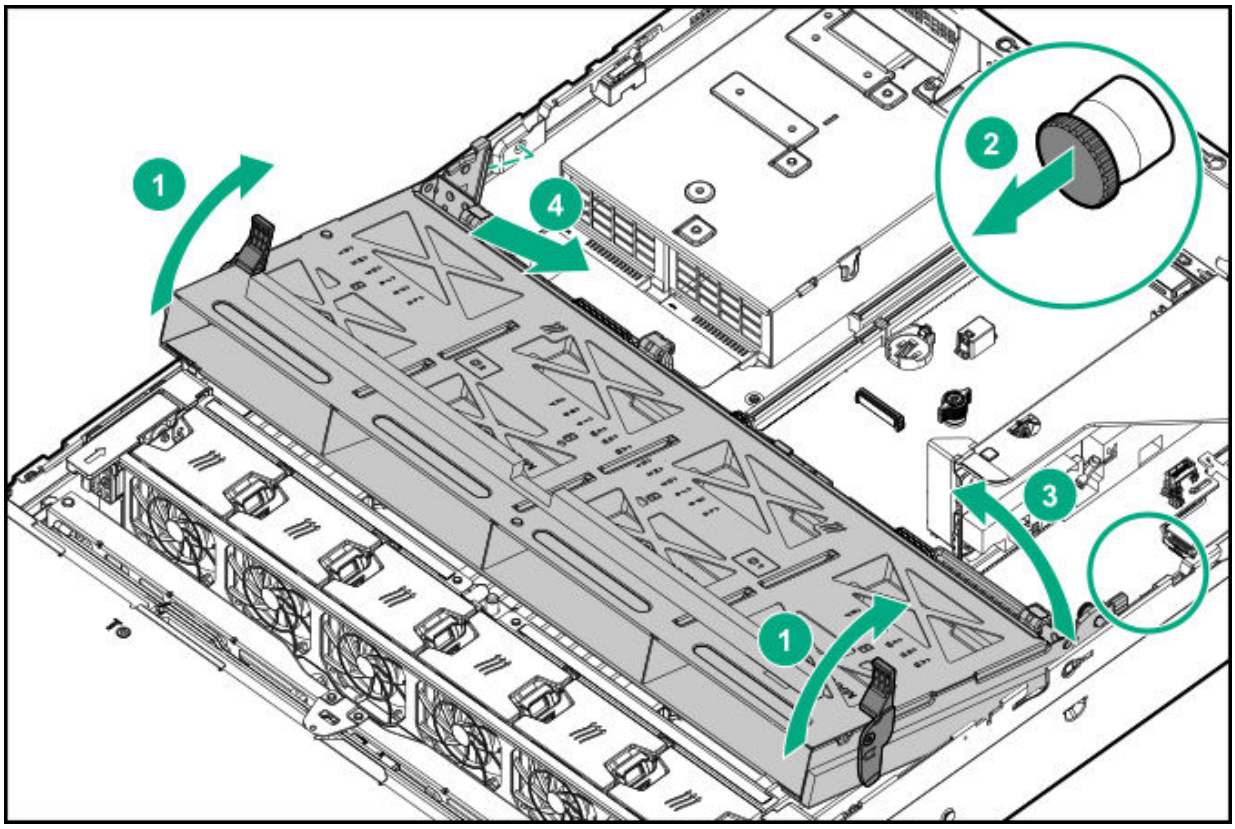

Installing the air baffle

Procedure

1. Observe the following alerts.

CAUTION: For proper cooling, do not operate the server without the access panel, baffles, expansion slot covers, or blanks installed. If the server supports hot-plug components, minimize the amount of time the access panel is open.

CAUTION: Do not detach the cable that connects the battery pack to the cache module. Detaching the cable causes any unsaved data in the cache module to be lost.

2. Install the air baffle.

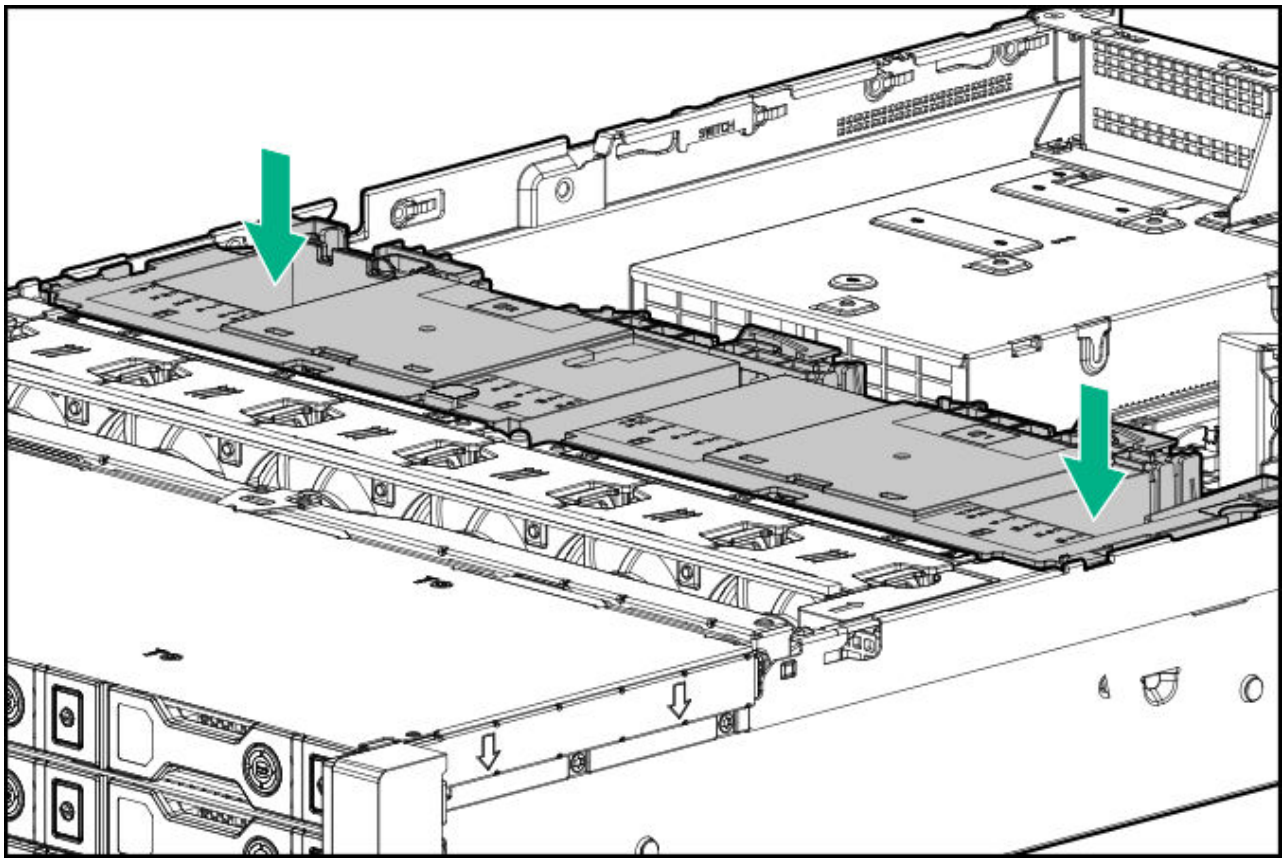

Removing a riser cage

CAUTION: To prevent damage to the server or expansion boards, power down the server and remove all AC power cords before removing or installing the PCI riser cage.

Procedure

1. Power down the server.

2. Remove all power:
    a. Disconnect each power cord from the power source.
    b. Disconnect each power cord from the server.
3. Do one of the following:
    - Extend the server from the rack.
    - Remove the server from the rack.
4. Remove the access panel.
5. Remove the riser cage:
    - Primary riser cage

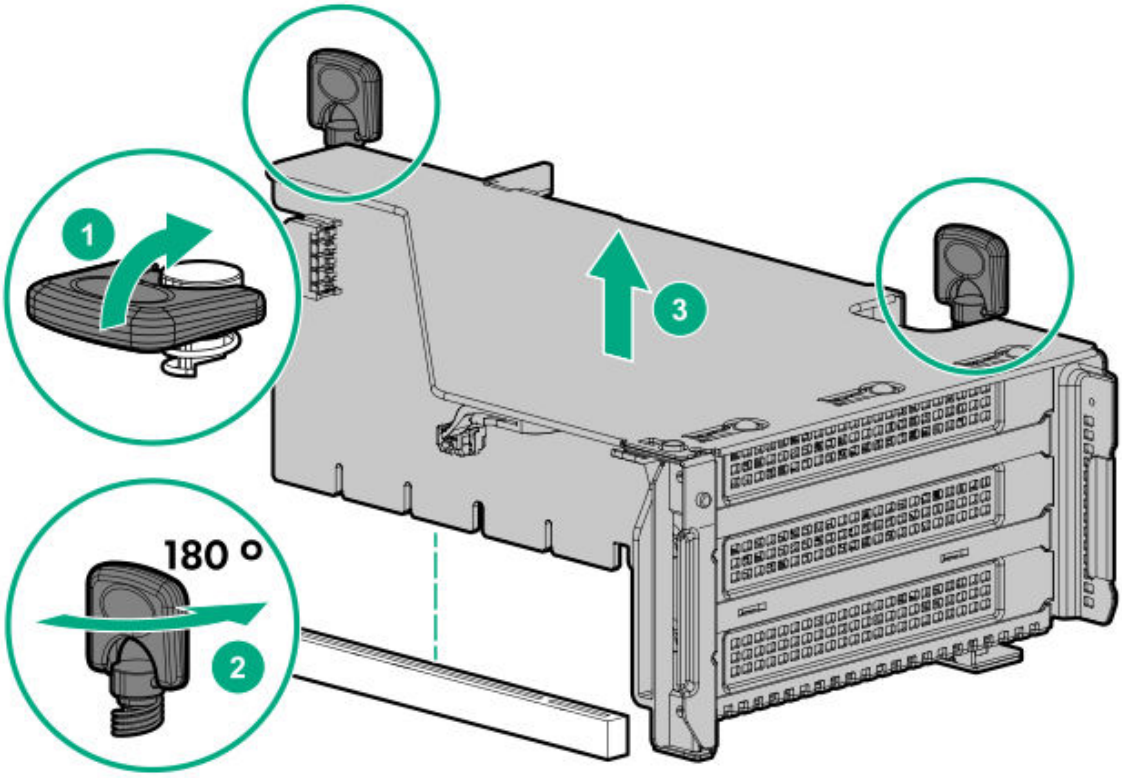

    - Secondary and tertiary riser cages

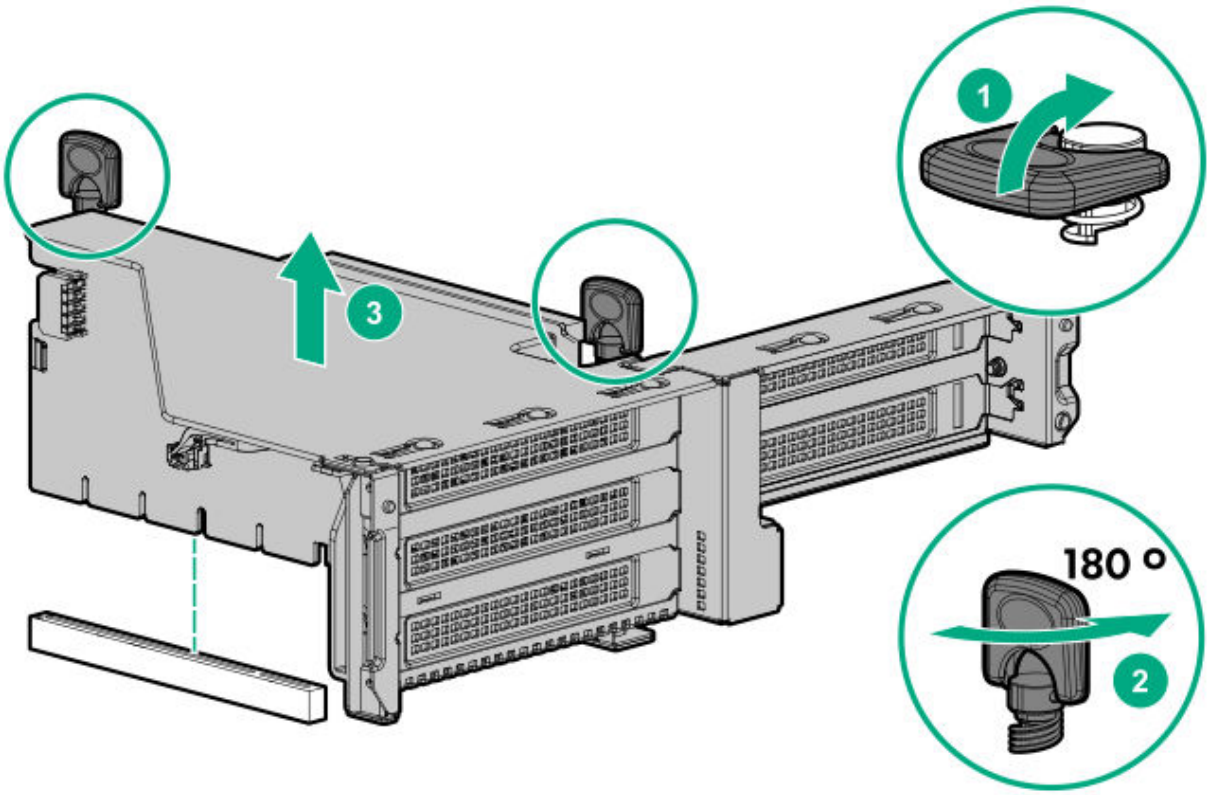

Removing a riser slot blank

CAUTION: To prevent improper cooling and thermal damage, do not operate the server unless all PCI slots have either an expansion slot cover or an expansion board installed.

Procedure

1. Power down the server.
2. Remove all power:
   a. Disconnect each power cord from the power source.
   b. Disconnect each power cord from the server.
3. Do one of the following:
   - Extend the server from the rack.

- Remove the server from the rack.

4. Remove the access panel.
5. Remove the riser cage.
6. Remove the blank.

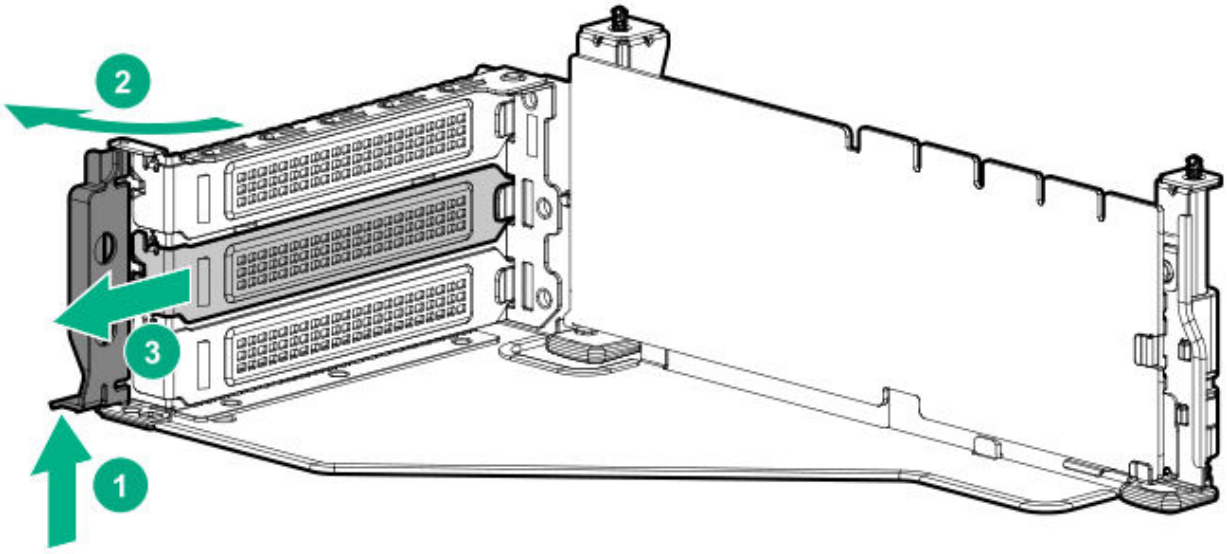

Removing the hard drive blank

Remove the component as indicated.

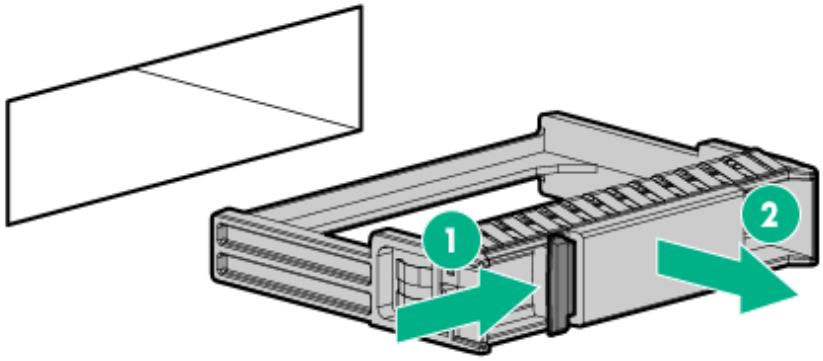

Releasing the cable management arm

Release the cable management arm and then swing the arm away from the rack.

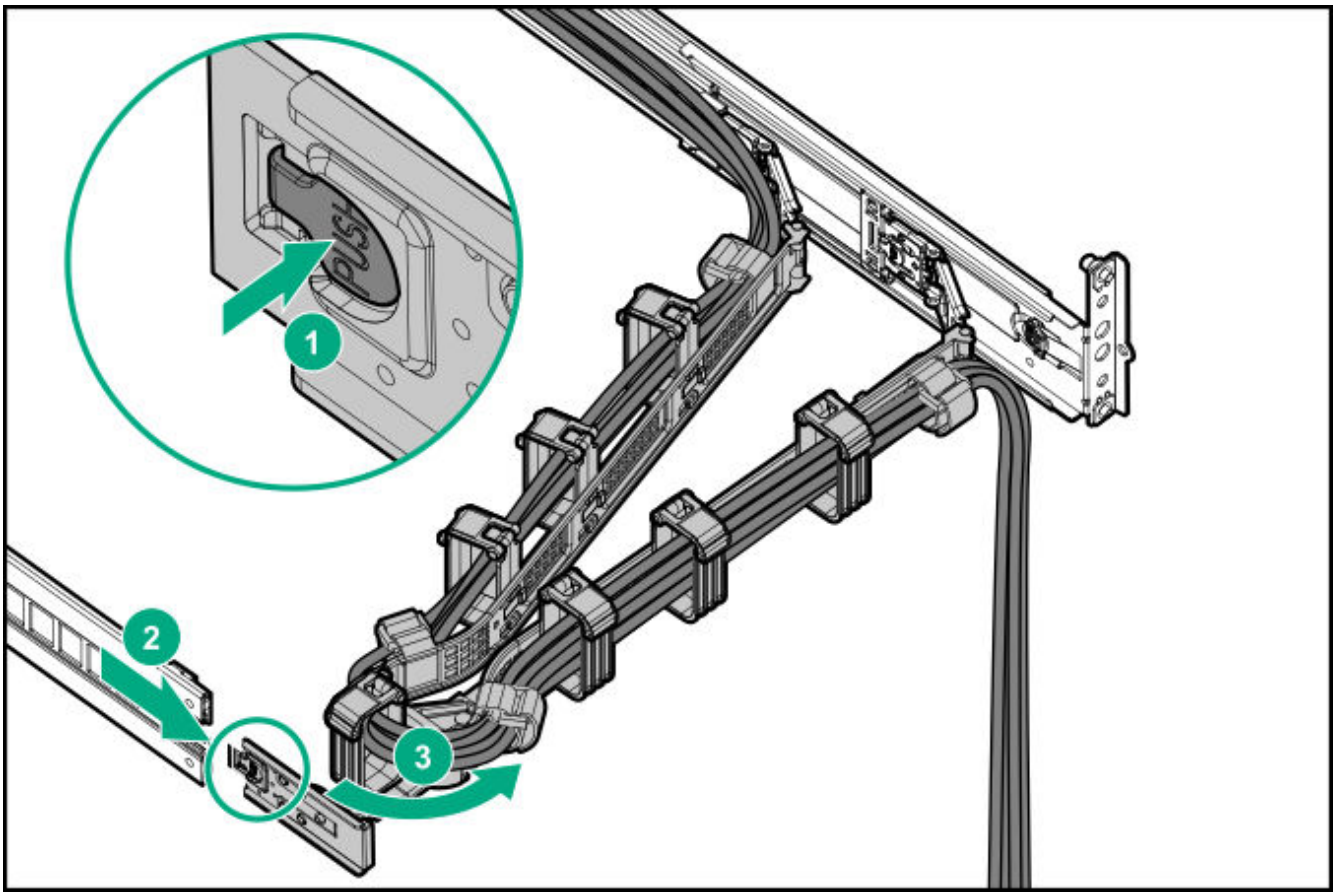

Accessing the Systems Insight Display

The Systems Insight Display is supported only on SFF models.

Procedure

1. Press and release the panel.
2. After the display fully ejects, rotate the display to view the LEDs.

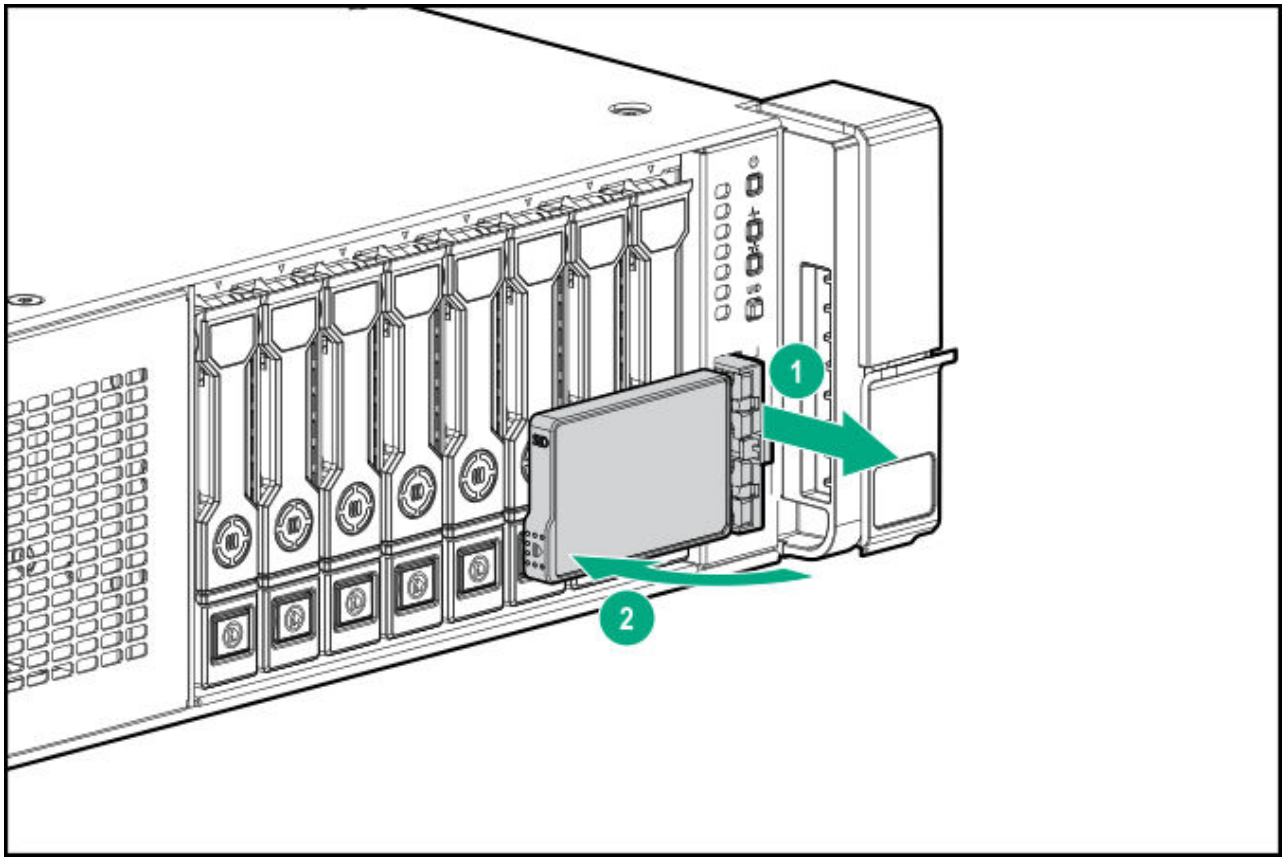

Setup

Optional service

Delivered by experienced, certified engineers, Hewlett Packard Enterprise support services help you keep your servers up and running with support packages tailored specifically for HPE ProLiant systems. Hewlett Packard Enterprise support services let you integrate both hardware and software support into a single package. A number of service level options are available to meet your business and IT needs.

Hewlett Packard Enterprise support services offer upgraded service levels to expand the standard product warranty with easy-to-buy, easy-to-use support packages that will help you make the most of your server investments. Some of the Hewlett Packard Enterprise support services for hardware, software or both are:

- Foundation Care – Keep systems running.
    - 6-Hour Call-to-Repair[1]
    - 4-Hour 24x7

    - Next Business Day
- Proactive Care – Help prevent service incidents and get you to technical experts when there is one.
    - 6-Hour Call-to-Repair[1]
    - 4-Hour 24x7
    - Next Business Day
- Deployment service for both hardware and software
- Hewlett Packard Enterprise Education Services – Help train your IT staff.

[1]The time commitment for this repair service might vary depending on the geographical region of site. For more service information available in your site, contact your local **Hewlett Packard Enterprise support center**.

For more information on Hewlett Packard Enterprise support services, see the **Hewlett Packard Enterprise website**.

Initial system installation

Depending on your technical expertise and the complexity of the product, for the initial system installation, select one of the following options:

- Ordering the HPE Installation Service
- Setting up the server

HPE Installation Service

HPE Installation Service provides basic installation of Hewlett Packard Enterprise branded equipment, software products, as well as HPE-supported products from other vendors that are sold by HPE or by HPE authorized resellers. The Installation Service is part of a suite of HPE deployment services that are designed to give users the peace of mind that comes from knowing that their HPE and HPE-supported products have been installed by an HPE specialist.

The HPE Installation Service provides the following benefits:

- Installation by an HPE authorized technical specialist.
- Verification prior to installation that all service prerequisites are met.
- Delivery of the service at a mutually scheduled time convenient to your organization.

- Allows your IT resources to stay focused on their core tasks and priorities.
- Full coverage during the warranty period for products that require installation by an HPE authorized technical specialist.

For more information on the features, limitations, provisions, and ordering information of the HPE Installation Service, see this Hewlett Packard Enterprise website:

http://www.hpe.com/support/installation-service

Setting up the server

Prerequisites

Before setting up the server:

- Download the latest SPP:
  http://www.hpe.com/servers/spp/download

  Support validation required
- Verify that your OS or virtualization software is supported:
  http://www.hpe.com/info/ossupport
- Read the HPE UEFI requirements for ProLiant servers on the HPE website:

  http://www.hpe.com/support/Gen10UEFI

  If the UEFI requirements are not met, you might experience boot failures or other errors when installing the operating system.
- Obtain the storage driver if needed:
  - Download it from the HPE Support Center website:

    http://www.hpe.com/support/hpesc
  - Extract it from the SPP.
- Read the operational requirements for the server:
  Operational requirements
- Read the safety and compliance information on the HPE website:
  http://www.hpe.com/support/safety-compliance-enterpriseproducts

Procedure

Unbox the server

1. Unbox the server and verify the contents:
   - Server
   - Power cord
   - Rack-mounting hardware
   - Documentation

   The server does not ship with OS media. All system software and firmware is preloaded on the server.

Install the hardware options

2. (Optional) Install hardware options. For installation instructions, see Hardware options installation.

Rack the server and connect the peripherals

3. Install the server in the rack. The racking procedures are included with the rack rails.
4. Connect the peripheral devices and power cords to the server.
5. Secure the cables and power cords using the cable management arm.
6. Decide how to manage the server:
   - Locally: Use a KVM switch or a connect a keyboard, monitor, and mouse.
   - Remotely: Connect to the iLO web interface and run a remote console:
     a. Verify the following:
        - iLO is licensed to use the remote console feature.
          If iLO is not licensed, visit the HPE website:

          http://www.hpe.com/info/ilo
        - The iLO management port is connected to a secure network.

     b. Using a browser, navigate to the iLO web interface, and then log in.
        ```
        https://<iLO hostname or IP address>
        ```
        Note the following:
        - The iLO hostname is located on the serial number/iLO information pull tab.
        - If a DHCP server assigns the IP address, the IP address appears on the boot screen.
        - If a static IP address is assigned, use that IP address.
        - The default login credentials are located on the serial number/iLO information pull tab.

     c. In the side navigation, click the **Remote Console & Media** link, and then launch a remote console.

Power on the server

7. Press the Power On/Standby button.

   For remote management, use the iLO virtual power button.

8. Using the SPP, update the following:

   - System ROM
   - Storage controller
   - Network controller
   - Intelligent Provisioning

Set up the storage

9. Set up the storage. Do one of the following:

   - To configure the server to boot from a SAN, see the following guide: **https://www.hpe.com/info/boot-from-san-config-guide**
   - If an HPE Smart Array controller is installed:
     - For SR controllers, use the HPE Smart Storage Administrator to create arrays:
       a. From the boot screen, press **F10** to run Intelligent Provisioning.
       b. From Intelligent Provisioning, run HPE Smart Storage Administrator.
     - For MR controllers, use the UEFI System Configuration to create arrays. For more information, see the following guide in the **information library**:

       HPE Smart Array P824i-p MR Gen10 User Guide

       Intelligent Provisioning and Smart Storage Administrator does not support Smart Array MR controller configuration.

       IMPORTANT:

       Before you install an OS on drives connected to the HPE Smart Array P824i-p MR Gen10 Controller, configure the drives using **UEFI System Utilities (F9)**. If the drives are not configured, the OS will not detect the drives during installation. For more information, see HPE Smart Array P824i-p MR Gen10 User Guide at the Hewlett Packard Enterprise website **https://www.hpe.com/info/P824i-p-docs**.

   - If no controller option is installed, AHCI is enabled by default. You can deploy an OS or virtualization software.

Deploy an OS or virtualization software

10. Deploy an OS or virtualization software. Do one of the following:

    - Press **F10** at the POST screen.

      For Intelligent Provisioning 3.30 and later, you are prompted to select whether you want to enter the Intelligent Provisioning or HPE Rapid Setup Software mode. After you have selected a mode, you must reprovision the server to change the mode that launches when you boot to **F10**.

    - Manually deploy an OS.

      a. Insert the installation media.

         For remote management, click **Virtual Drives** in the iLO remote console to mount images, drivers, or files to a virtual folder. If a storage driver is required to install the OS, use the virtual folder to store the driver.

      b. Press **F11** at boot screen to select the boot device.

      c. After the OS installed, update the drivers.

Register the server

11. To experience quicker service and more efficient support, register the server at the HPE website:

    https://myenterpriselicense.hpe.com

Operational requirements

Space and airflow requirements

To allow for servicing and adequate airflow, observe the following space and airflow requirements when deciding where to install a rack:

- Leave a minimum clearance of 63.5 cm (25 in) in front of the rack.
- Leave a minimum clearance of 76.2 cm (30 in) behind the rack.
- Leave a minimum clearance of 121.9 cm (48 in) from the back of the rack to the back of another rack or row of racks.

Hewlett Packard Enterprise servers draw in cool air through the front door and expel warm air through the rear door. Therefore, the front and rear rack doors must be adequately ventilated to allow ambient room air to enter the cabinet, and the rear door must be adequately ventilated to allow the warm air to escape from the cabinet.

CAUTION: To prevent improper cooling and damage to the equipment, do not block the ventilation openings.

When vertical space in the rack is not filled by a server or rack component, the gaps between the components cause changes in airflow through the rack and across the servers. Cover all gaps with blanking panels to maintain proper airflow.

CAUTION: Always use blanking panels to fill empty vertical spaces in the rack. This arrangement ensures proper airflow. Using a rack without blanking panels results in improper cooling that can lead to thermal damage.

The 9000 and 10000 Series Racks provide proper server cooling from flow-through perforations in the front and rear doors that provide 64 percent open area for ventilation.

CAUTION: When using a Compaq branded 7000 series rack, install the high airflow rack door insert (PN 327281-B21 for 42U rack, PN 157847-B21 for 22U rack) to provide proper front-to-back airflow and cooling.

CAUTION:

If a third-party rack is used, observe the following additional requirements to ensure adequate airflow and to prevent damage to the equipment:

- Front and rear doors—If the 42U rack includes closing front and rear doors, you must allow 5,350 sq cm (830 sq in) of holes evenly distributed from top to bottom to permit adequate airflow (equivalent to the required 64 percent open area for ventilation).
- Side—The clearance between the installed rack component and the side panels of the rack must be a minimum of 7 cm (2.75 in).

Temperature requirements

To ensure continued safe and reliable equipment operation, install or position the system in a well-ventilated, climate-controlled environment.

The maximum recommended ambient operating temperature (TMRA) for most server products is 35°C (95°F). The temperature in the room where the rack is located must not exceed 35°C (95°F).

CAUTION: To reduce the risk of damage to the equipment when installing third-party options:

- Do not permit optional equipment to impede airflow around the server or to increase the internal rack temperature beyond the maximum allowable limits.
- Do not exceed the manufacturer's TMRA.

Power requirements

Installation of this equipment must comply with local and regional electrical regulations governing the installation of information technology equipment by licensed electricians. This equipment is designed to operate in installations covered by NFPA 70, 1999 Edition (National Electric Code) and NFPA-75, 1992 (code for Protection of Electronic Computer/Data Processing Equipment). For electrical power ratings on options, refer to the product rating label or the user documentation supplied with that option.

WARNING: To reduce the risk of personal injury, fire, or damage to the equipment, do not overload the AC supply branch circuit that provides power to the rack. Consult the electrical authority having jurisdiction over wiring and installation requirements of your facility.

CAUTION: Protect the server from power fluctuations and temporary interruptions with a regulating uninterruptible power supply. This device protects the hardware from damage caused by power surges and voltage spikes and keeps the system in operation during a power failure.

Electrical grounding requirements

The server must be grounded properly for proper operation and safety. In the United States, you must install the equipment in accordance with NFPA 70, National Electric Code Article 250, as well as any local and regional building codes. In Canada, you must install the equipment in accordance with Canadian Standards Association, CSA C22.1, Canadian Electrical Code. In all other countries, you must install the equipment in accordance with any regional or national electrical wiring codes, such as the International Electrotechnical Commission (IEC) Code 364, parts 1 through 7. Furthermore, you must be sure that all power distribution devices used in the installation, such as branch wiring and receptacles, are listed or certified grounding-type devices.

Because of the high ground-leakage currents associated with multiple servers connected to the same power source, Hewlett Packard Enterprise recommends the use of a PDU that is either permanently wired to the

building's branch circuit or includes a nondetachable cord that is wired to an industrial-style plug. NEMA locking-style plugs or those complying with IEC 60309 are considered suitable for this purpose. Using common power outlet strips for the server is not recommended.

Server warnings and cautions

WARNING:

This server is heavy. To reduce the risk of personal injury or damage to the equipment:

- Observe local occupational health and safety requirements and guidelines for manual material handling.
- Get help to lift and stabilize the product during installation or removal, especially when the product is not fastened to the rails. Hewlett Packard Enterprise recommends that a minimum of two people are required for all rack server installations. If the server is installed higher than chest level, a third person may be required to help align the server.
- Use caution when installing the server in or removing the server from the rack; it is unstable when not fastened to the rails.

WARNING:

To reduce the risk of personal injury from hot surfaces, allow the drives and the internal system components to cool before touching them.

WARNING:

To reduce the risk of personal injury, electric shock, or damage to the equipment, remove the power cord to remove power from the server. The front panel Power On/Standby button does not completely shut off system power. Portions of the power supply and some internal circuitry remain active until AC/DC power is removed.

WARNING:
To reduce the risk of fire or burns after removing the energy pack:

- Do not disassemble, crush, or puncture the energy pack.
- Do not short external contacts.
- Do not dispose of the energy pack in fire or water.
- Do not expose the energy pack to low air pressure as it might lead to explosion or leakage of flammable liquid or gas.
- Do not expose the energy pack to temperatures higher than 60°C (140°F).

After power is disconnected, battery voltage might still be present for 1s to 160s.

CAUTION:
Protect the server from power fluctuations and temporary interruptions with a regulating uninterruptible power supply. This device protects the hardware from damage caused by power surges and voltage spikes and keeps the system in operation during a power failure.

CAUTION:
Do not operate the server for long periods with the access panel open or removed. Operating the server in this manner results in improper airflow and improper cooling that can lead to thermal damage.

Rack warnings

WARNING: To reduce the risk of personal injury or damage to the equipment, be sure that:

- The leveling jacks are extended to the floor.
- The full weight of the rack rests on the leveling jacks.
- The stabilizing feet are attached to the rack if it is a single-rack installation.
- The racks are coupled together in multiple-rack installations.
- Only one component is extended at a time. A rack may become unstable if more than one component is extended for any reason.

WARNING: To reduce the risk of personal injury or equipment damage when unloading a rack:

- At least two people are needed to safely unload the rack from the pallet. An empty 42U rack can weigh as much as 115 kg (253 lb), can stand more than 2.1 m (7 ft) tall, and might become unstable when being moved on its casters.
- Never stand in front of the rack when it is rolling down the ramp from the pallet. Always handle the rack from both sides.

WARNING:

To reduce the risk of personal injury or damage to the equipment, adequately stabilize the rack before extending a component outside the rack. Extend only one component at a time. A rack may become unstable if more than one component is extended.

WARNING:

When installing a server in a telco rack, be sure that the rack frame is adequately secured at the top and bottom to the building structure.

Preventing electrostatic discharge

To prevent damaging the system, be aware of the precautions you must follow when setting up the system or handling parts. A discharge of static electricity from a finger or other conductor may damage system boards or other static-sensitive devices. This type of damage may reduce the life expectancy of the device.

Procedure

- Avoid hand contact by transporting and storing products in static-safe containers.
- Keep electrostatic-sensitive parts in their containers until they arrive at static-free workstations.
- Place parts on a grounded surface before removing them from their containers.
- Avoid touching pins, leads, or circuitry.
- Always be properly grounded when touching a static-sensitive component or assembly.

POST screen options

When the server is powered on, the POST screen is displayed. The following options are displayed:

- System Utilities (**F9**)
  Use this option to configure the system BIOS.
- Intelligent Provisioning (**F10**)
  Use this option to deploy an operating system or configure storage.
- Boot order (**F11**)
  Use this option to make a one-time boot selection.
- Network boot (**F12**)
  Use this option to boot the server from the network.

Installing or deploying an operating system

Before installing an operating system, observe the following:

- Be sure to read the HPE UEFI requirements for ProLiant servers on the **Hewlett Packard Enterprise website**. If UEFI requirements are not met, you might experience boot failures or other errors when installing the operating system.
- Update firmware before using the server for the first time, unless software or components require an older version. For more information, see Keeping the system current.
- For the latest information on supported operating systems, see the **Hewlett Packard Enterprise website**.

- The server does not ship with OS media. All system software and firmware is preloaded on the server.

Hardware options installation

This chapter provides detailed instructions on how to install hardware options.

For more information on supported options, see the product QuickSpecs on the HPE ProLiant DL385 Gen10 Plus Server website at:

http://www.hpe.com/servers/dl385-gen10plus

To view the warranty for your server and supported options, see Warranty information.

Introduction

Install any hardware options before initializing the server. If multiple options are being installed, read the installation instructions for all the hardware options to identify similar steps and streamline the installation process.

WARNING: To reduce the risk of personal injury from hot surfaces, allow the drives and the internal system components to cool before touching them.

CAUTION: To prevent damage to electrical components, properly ground the server before beginning any installation procedure. Improper grounding can cause electrostatic discharge.

Installing the bezel and bezel lock

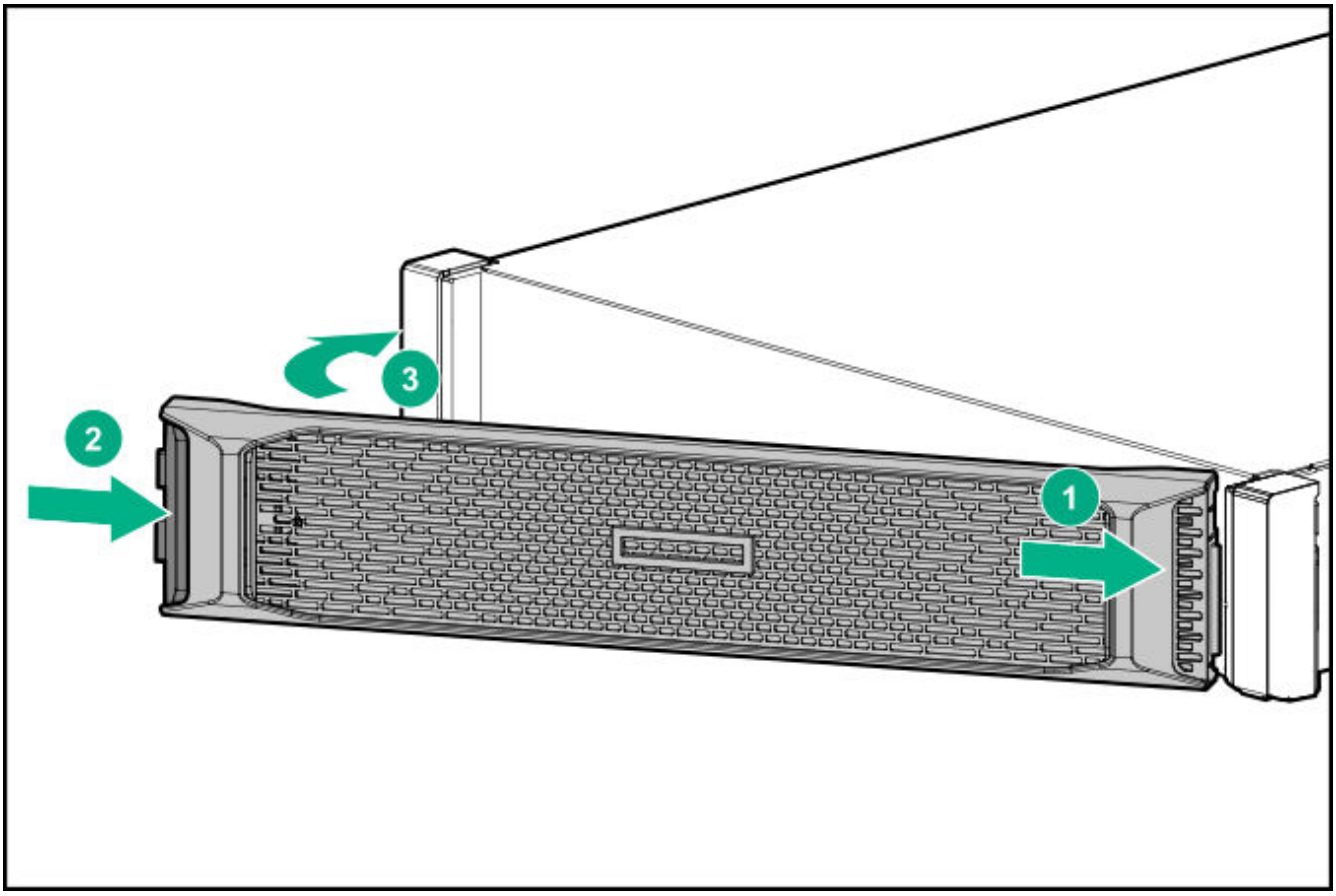
3
2
1

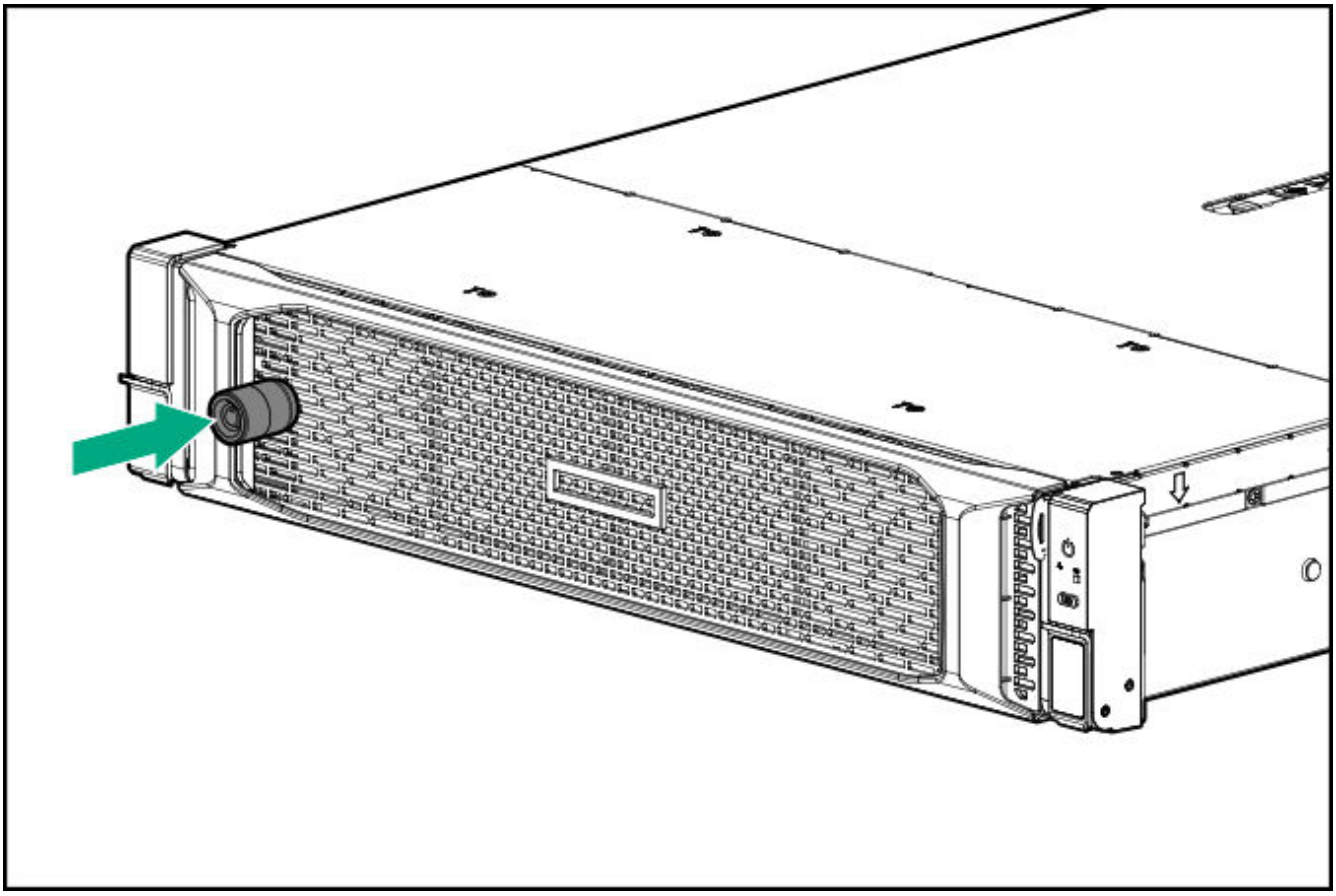

Drive options

Drive guidelines

Depending on the configuration, the server supports SAS, SATA, and NVMe drives.

Observe the following general guidelines:

- The system automatically sets all drive numbers.
- If only one hard drive is used, install it in the bay with the lowest drive number.
  For drive numbering, see Drive bay numbering.
- The NVMe SSD is a PCIe bus device. Devices attached to a PCIe bus cannot be removed without allowing the device and bus to complete and cease the signal/traffic flow.

Do not remove an NVMe SSD from the drive bay while the Do Not Remove button LED is flashing. The Do Not Remove button LED flashes to indicate that the device is still in use. Removal of the NVMe SSD before the device has completed and ceased signal/traffic flow can cause loss of data.

- Drives with the same capacity provide the greatest storage space efficiency when grouped into the same drive array.

Supported drive carriers

Depending on the drive cage, the server supports the following drive carriers:

- SFF Smart Carrier (SC)
- LFF Low Profile Carrier (LP)
- LFF Low Profile Converter (LPC)

Installing a hot-plug SAS or SATA drive or an NVMe drive

CAUTION: To prevent improper cooling and thermal damage, do not operate the server unless all drive and device bays are populated with either a component or a blank.

Procedure

1. Remove the drive blank:
   - SAS or SATA

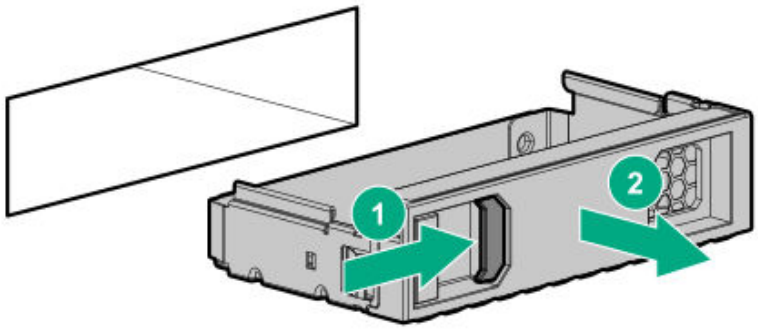

- NVMe

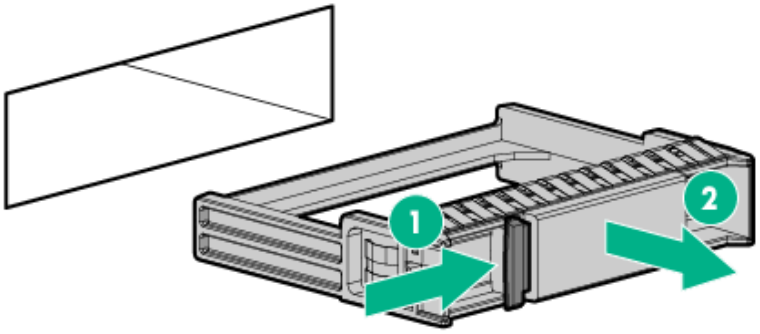

2. Prepare the drive.

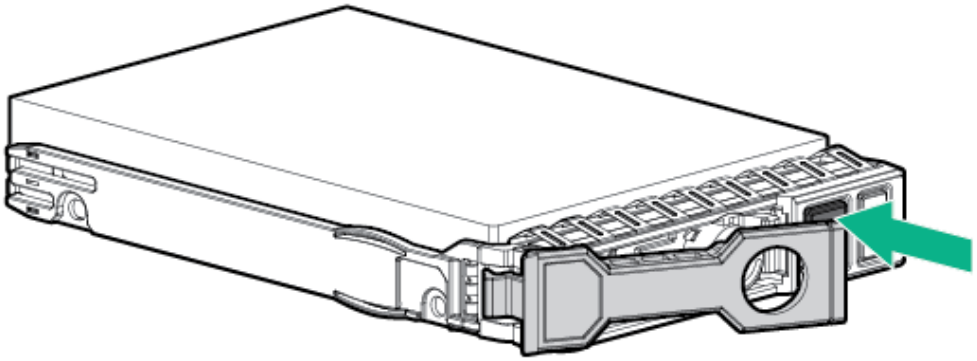

3. Install the drive.

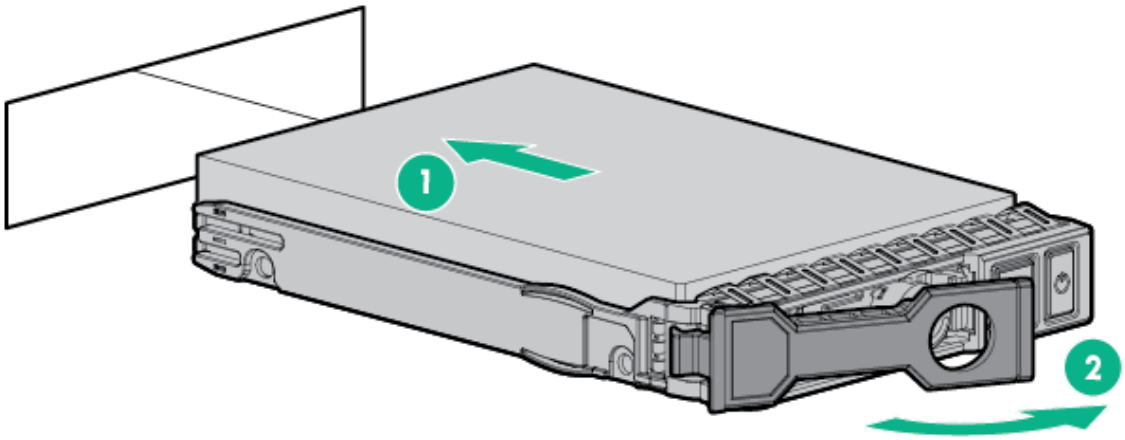

4. Observe the LED status of the drive.

Power supply option

WARNING:
To reduce the risk of electric shock or damage to the equipment:

- Do not disable the power cord grounding plug. The grounding plug is an important safety feature.
- Plug the power cord into a grounded (earthed) electrical outlet that is easily accessible at all times.
- Unplug the power cord from the power supply to disconnect power to the equipment.
- Do not route the power cord where it can be walked on or pinched by items placed against it. Pay particular attention to the plug, electrical outlet, and the point where the cord extends from the server.

WARNING:
To reduce the risk of injury from electric shock hazards, do not open power supplies. Refer all maintenance, upgrades, and servicing to qualified personnel.

WARNING: To reduce the risk of personal injury from hot surfaces, allow the drives and the internal system components to cool before touching them.

CAUTION: To prevent damage to electrical components, take the appropriate anti-static precautions before beginning any installation, removal, or replacement procedure. Improper grounding can cause electrostatic discharge.

CAUTION:

To maintain proper airflow and cooling in the power enclosure, always install a power supply blank into each bay. Improper airflow can lead to thermal damage.

IMPORTANT:

Mixing different types of power supplies in the same server might limit or disable some power supply features including support for power redundancy. To ensure access to all available features, all power supplies in the same server must have the same output and efficiency ratings.

Installing a hot-plug AC power supply

WARNING:

To reduce the risk of personal injury, fire, or damage to the equipment, do not overload the AC supply branch circuit that provides power to the rack. Consult the electrical authority having jurisdiction over wiring and installation requirements of your facility.

WARNING: To reduce the risk of personal injury from hot surfaces, allow the drives, power supplies, and internal system components to cool before touching them.

CAUTION:

To prevent improper cooling and thermal damage, do not operate the enclosure unless all device bays are populated with either a component or a blank.

Procedure

1. Remove the power supply blank.

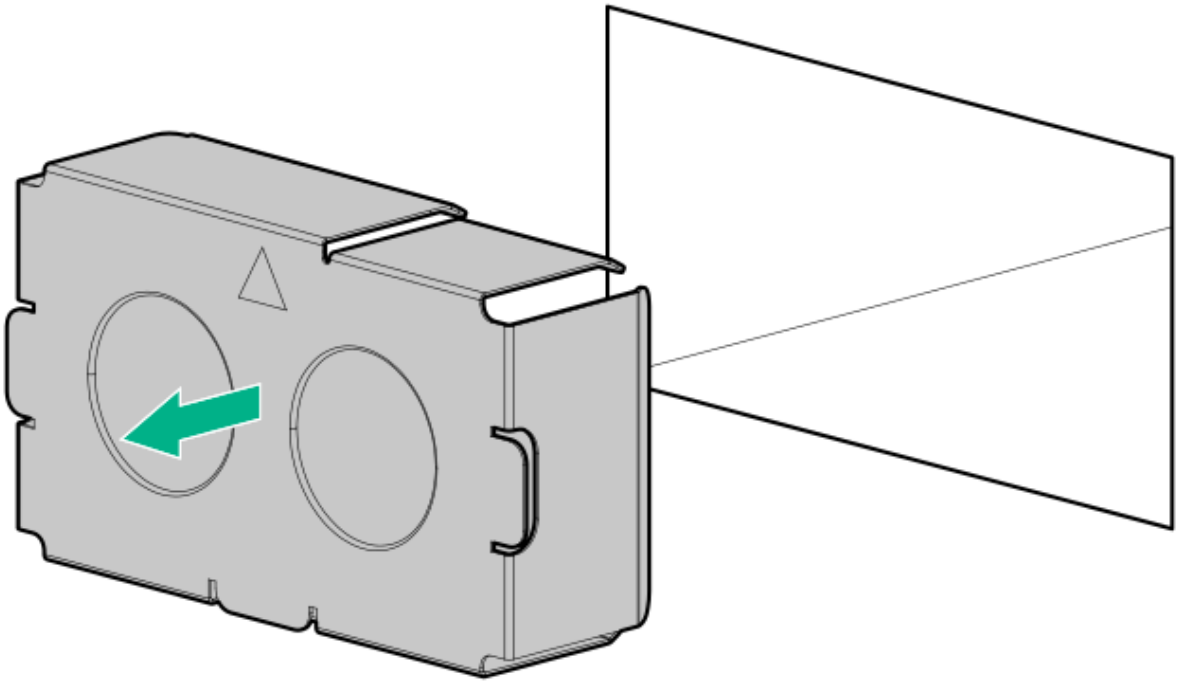

2. Slide the power supply into the bay until it clicks into place.

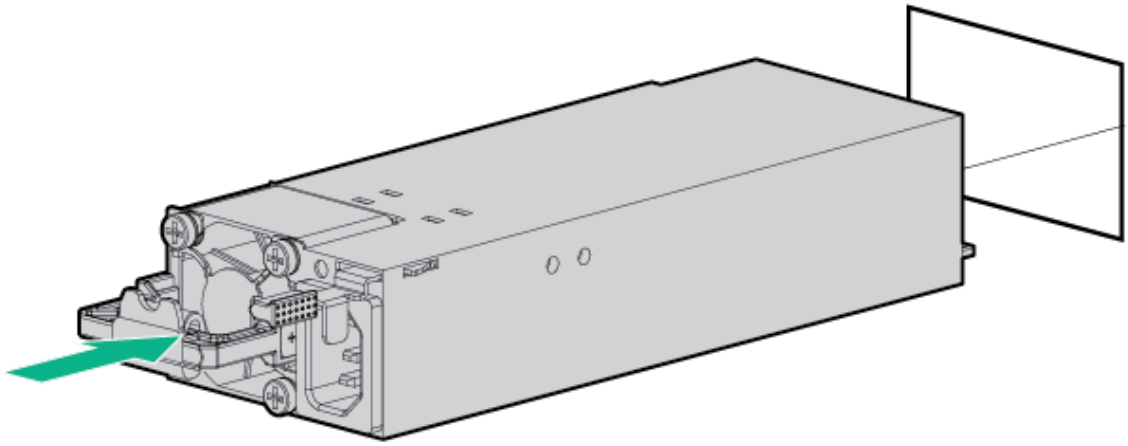

3. Connect the power cord to the power supply.
4. Secure the power cord in the strain relief strap attached to the power supply handle:

a. Unwrap the strain relief strap from the power supply handle.

> **CAUTION:**
>
> Avoid tight bend radii to prevent damaging the internal wires of a power cord or a server cable. Never bend power cords and server cables tight enough to cause a crease in the sheathing.

b. Secure the power cord with the strain relief strap. Roll the extra length of the strap around the power supply handle.

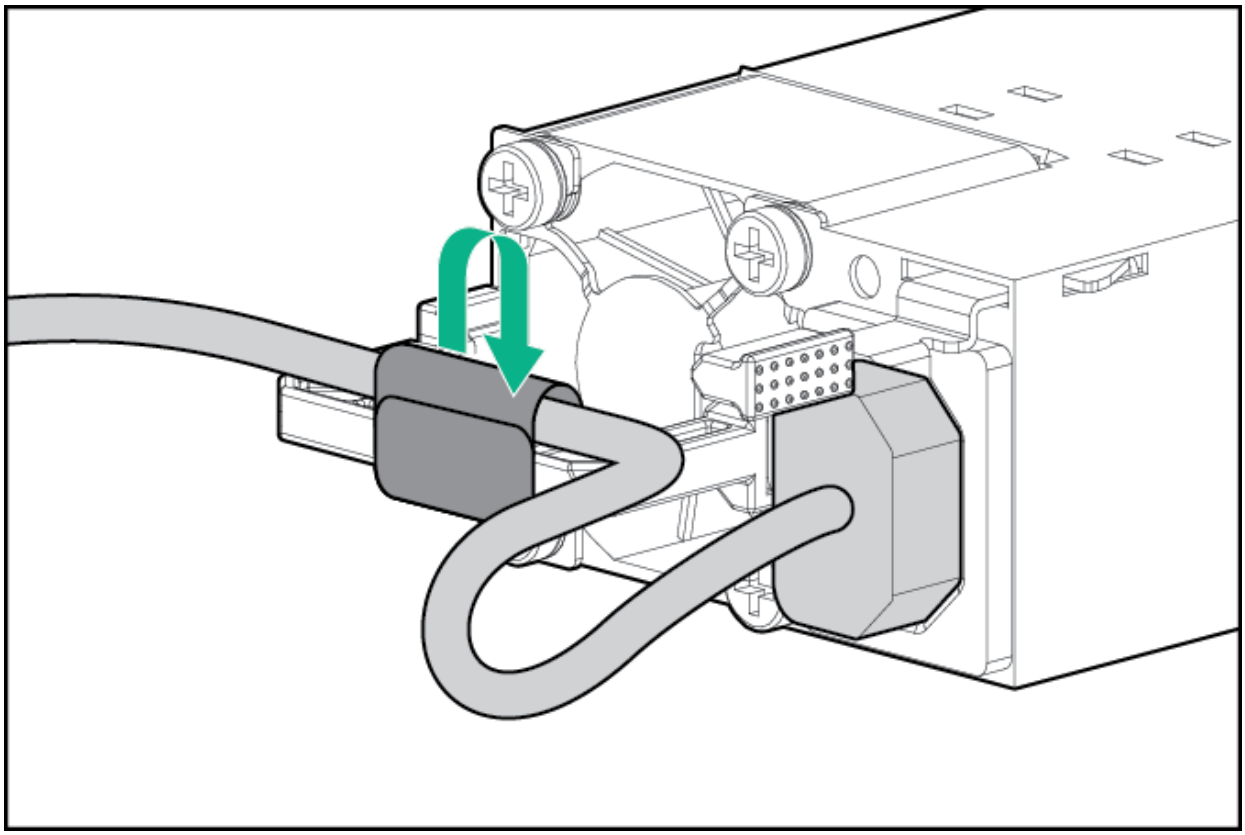

5. Connect the power cord to the power source.
6. Be sure that the power supply LED is green.

Installing the HPE 800 W Flex Slot -48 VDC hot-plug power supply

The DC power supply option kits do not ship with a Power Supply DC cable Kit and may not include a Power Supply Cable Lug kit. The optional DC Cable kit or the optional DC Cable Lug Kit may be purchased directly from Hewlett Packard Enterprise or an authorized HPE reseller. For additional information, refer to the power supply QuickSpecs at **https://www.hpe.com/info/fsps-qs**.

WARNING:

To reduce the risk of electric shock, fire, and damage to the equipment, you must install this product in accordance with the following guidelines:

- The HPE 800 W Flex Slot -48 VDC hot-plug power supply is intended only for installation in Hewlett Packard Enterprise servers located in a restricted access location.
- The HPE 800 W Flex Slot -48 VDC hot-plug power supply is not intended for direct connection to the DC supply branch circuit. Only connect this power supply to a power distribution unit (PDU) that provides an independent overcurrent-protected output for each DC power supply. Each output overcurrent-protected device in the PDU must be suitable for interrupting fault current available from the DC power source and must be rated no more than 30 A.
- The PDU output must have a shut-off switch or a circuit breaker to disconnect power for each power supply. To completely remove power from the power supply, disconnect power at the PDU. Disconnect the power for each power supply, if there are multiple power supplies.
- In accordance with applicable national requirements for Information Technology Equipment and Telecommunications Equipment, this power supply only connects to DC power sources that are classified as SELV or TNV. Generally, these requirements are based on the International Standard for Information Technology Equipment, IEC 60950-1/IEC 62368-1. In accordance with local and regional electric codes and regulations, the DC source must have one pole (Neutral/Return) reliably connected to earth ground.
- You must connect the power supply ground screw located on the front of the power supply to a suitable ground (earth) terminal. In accordance with local and regional electric codes and regulations, this terminal must be connected to a suitable building ground (earth) terminal. Do not rely on the rack or cabinet chassis to provide adequate ground (earth) continuity.

Prerequisites

Before you install this option, make sure that you have the following items available:

- No. 1 Phillips screwdriver
- Optional Q0H80A HPE 800W DC Power Cable Kit can be purchased from an HPE authorized reseller.
- If you are not using an input power cord option, the power supply cabling must be made in consultation with a licensed electrician and be compliant with local code.
- If you are replacing the factory installed ground lug, use the KST RNB5-5 crimp terminal ring or equivalent. Use an M5-0.80 x 8 screw to attach the ground lug to the power supply.

Procedure

1. Remove the power supply blank.

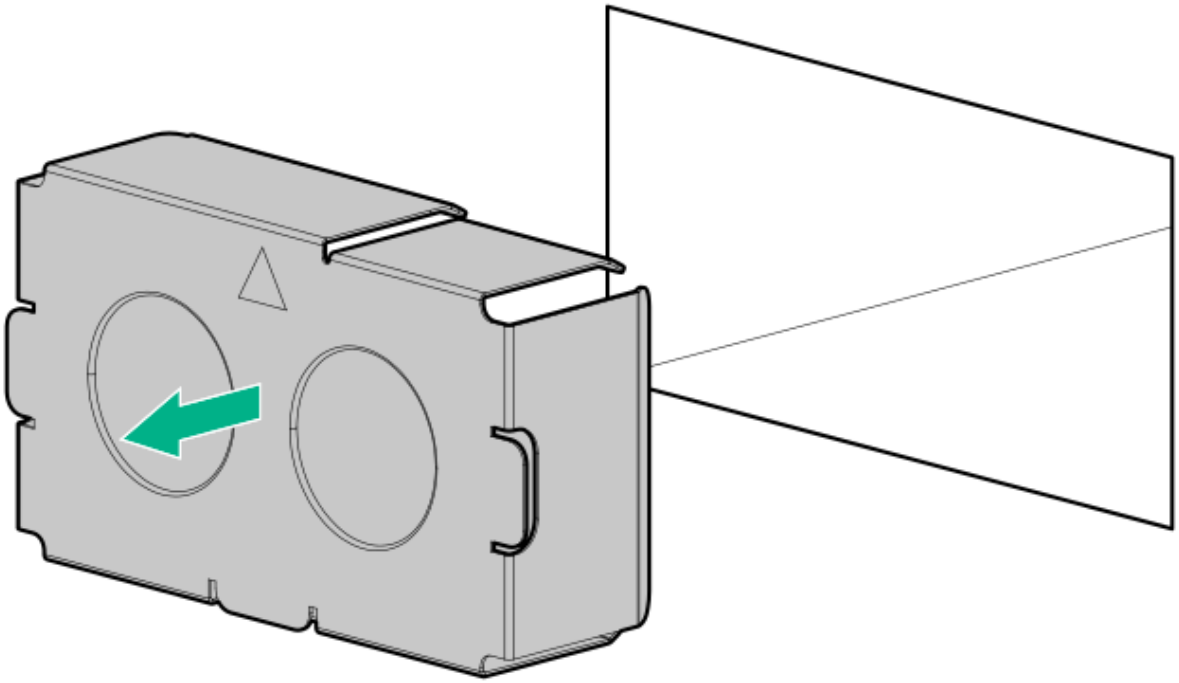

2. Remove the ring tongue.

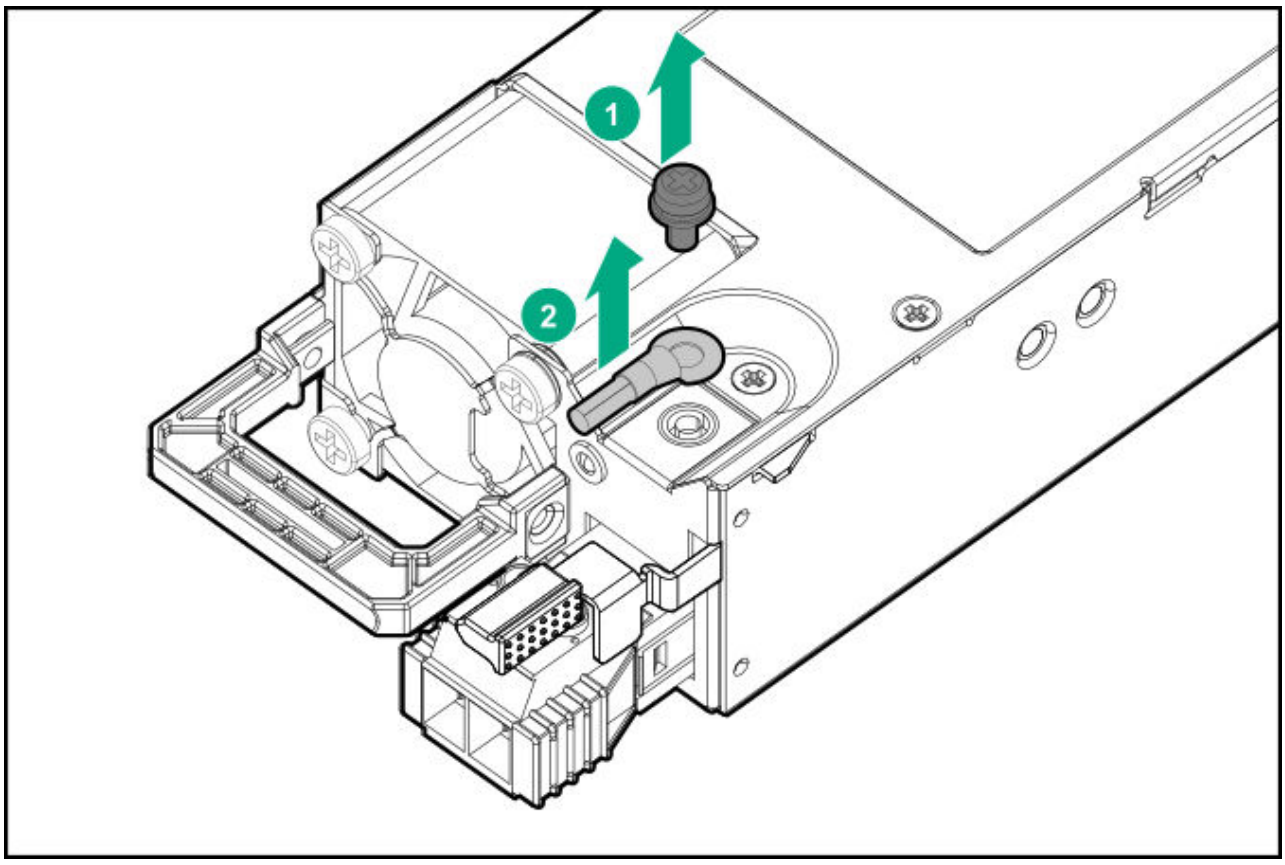

3. Crimp the ring tongue to the ground cable from the -48 V DC power source.

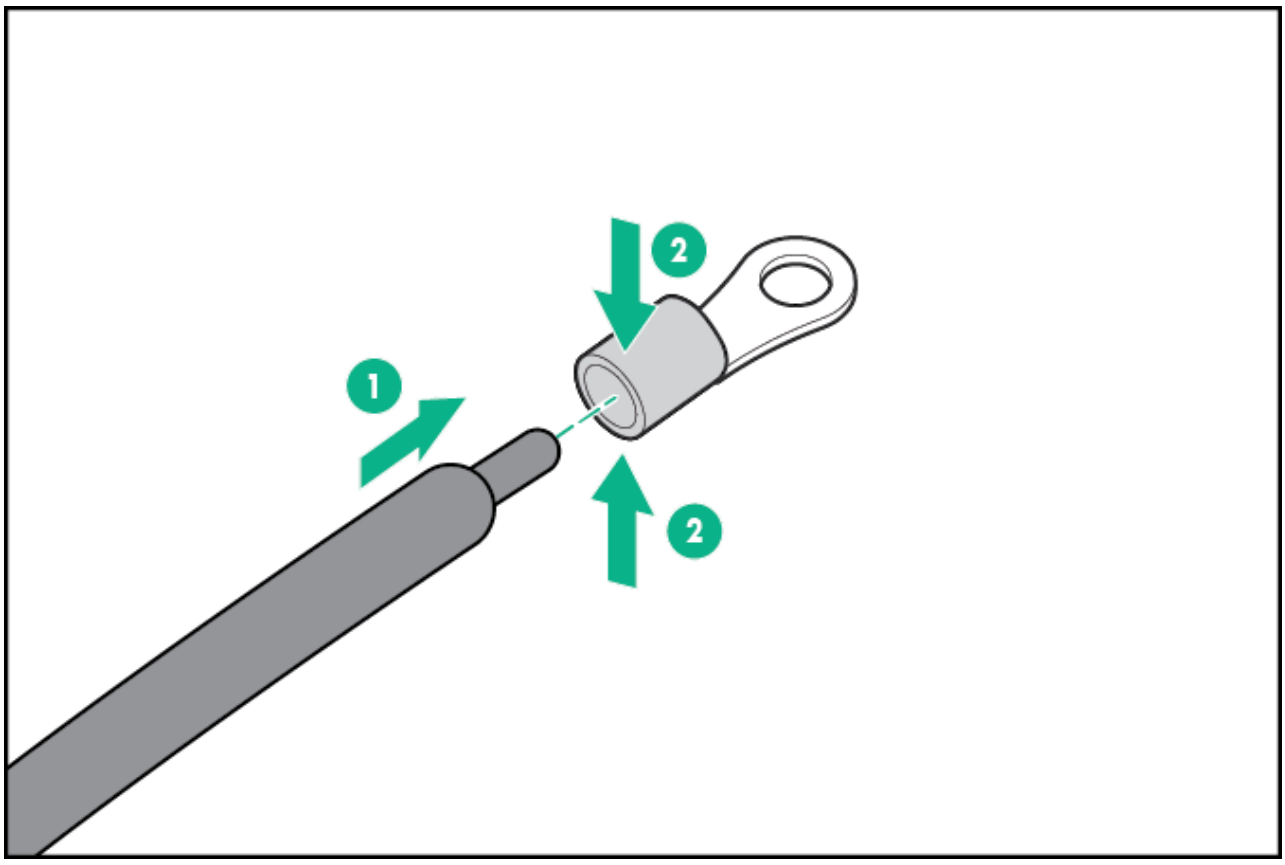

4. Remove the terminal block connector.

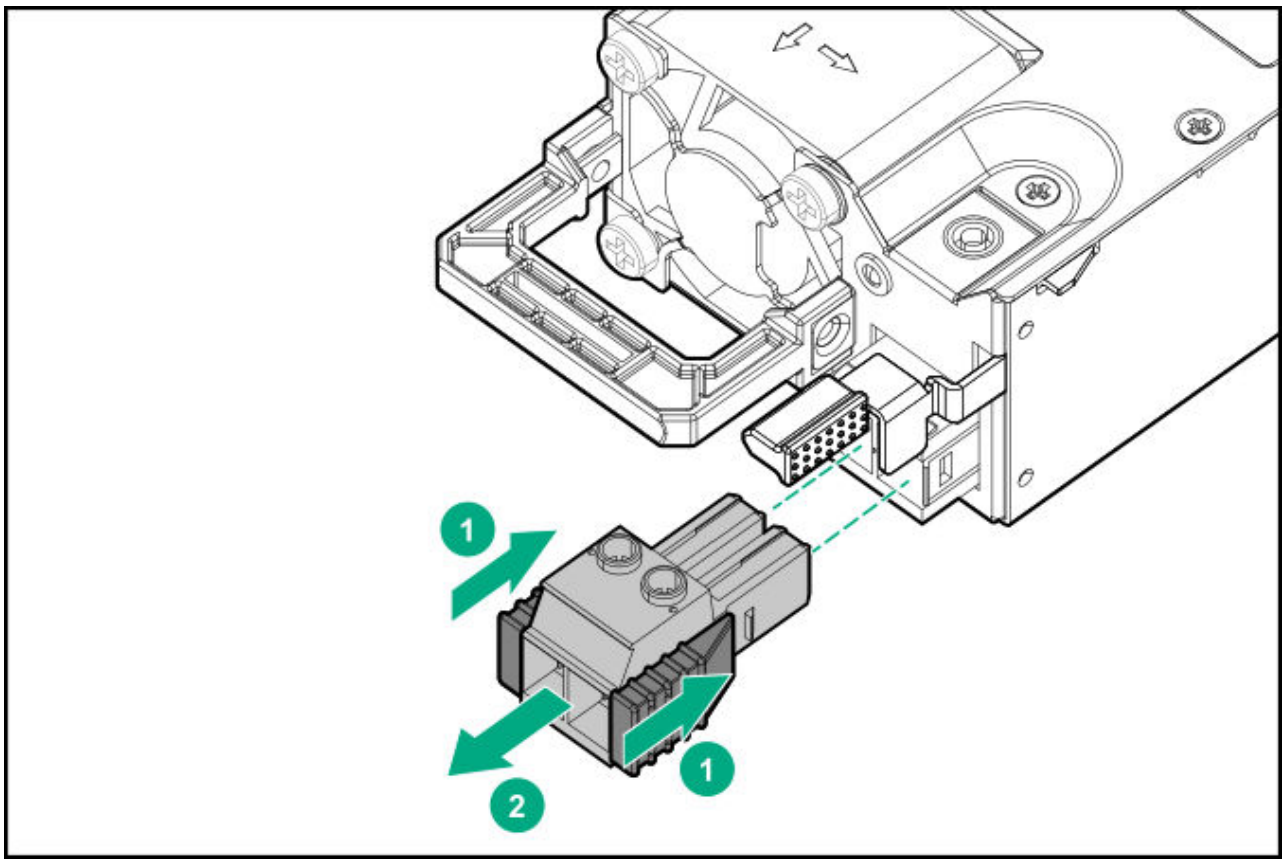

5. Loosen the screws on the terminal block connector.

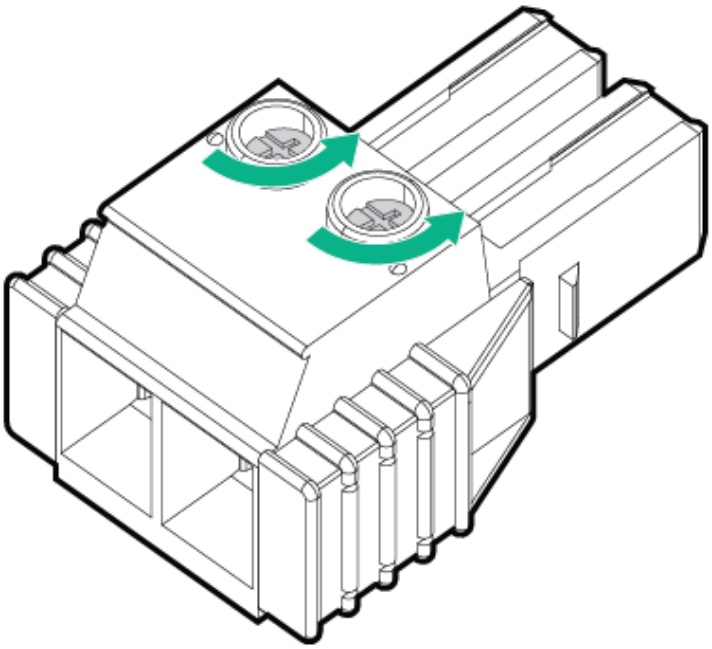

6. Attach the ground (earthed) wire to the ground screw and washer and tighten to 1.47 N m (13 lb-in) of torque. The ground wire must be connected before the -48 V wire and the return wire.

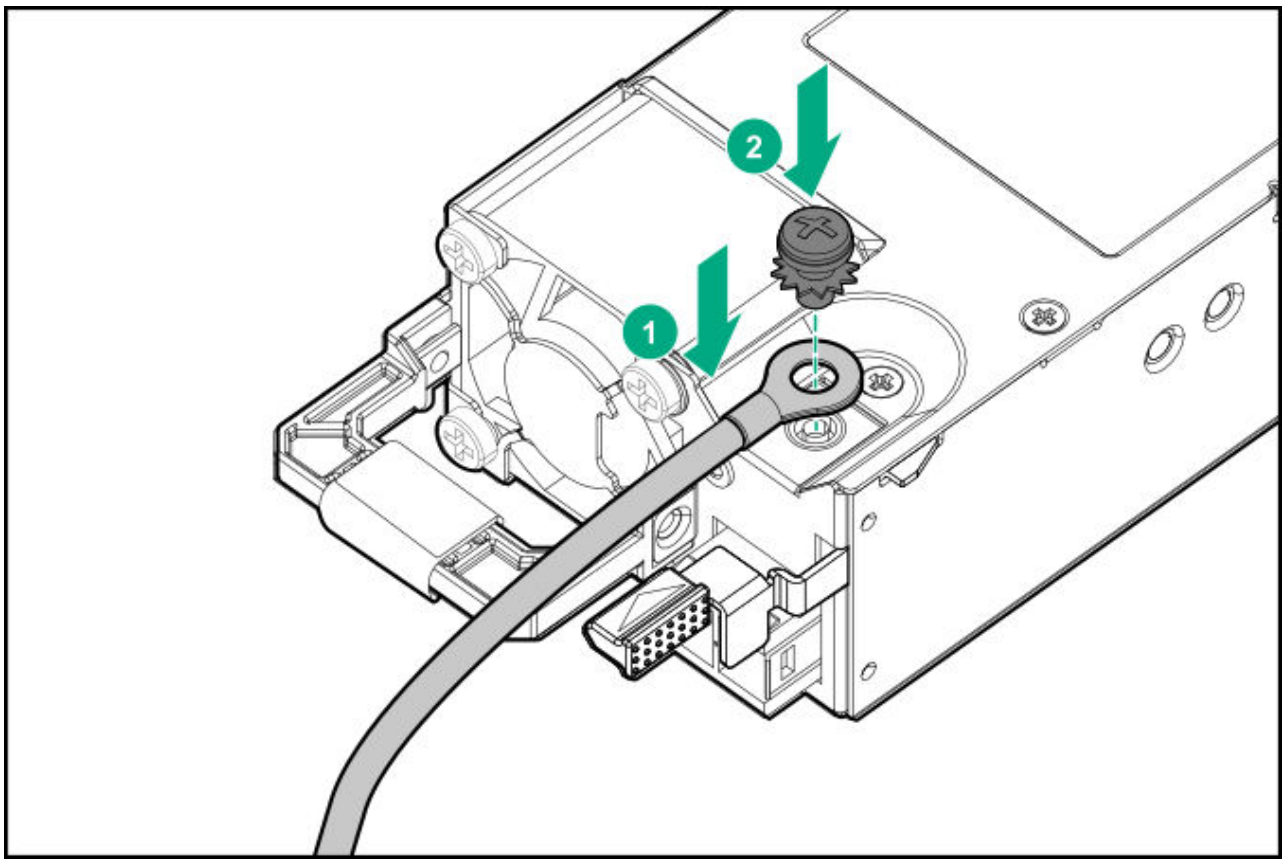

7. Insert the -48 V wire into the left side of the terminal block connector, and then tighten the screw to 1.3 N m (10 lb-in) of torque.

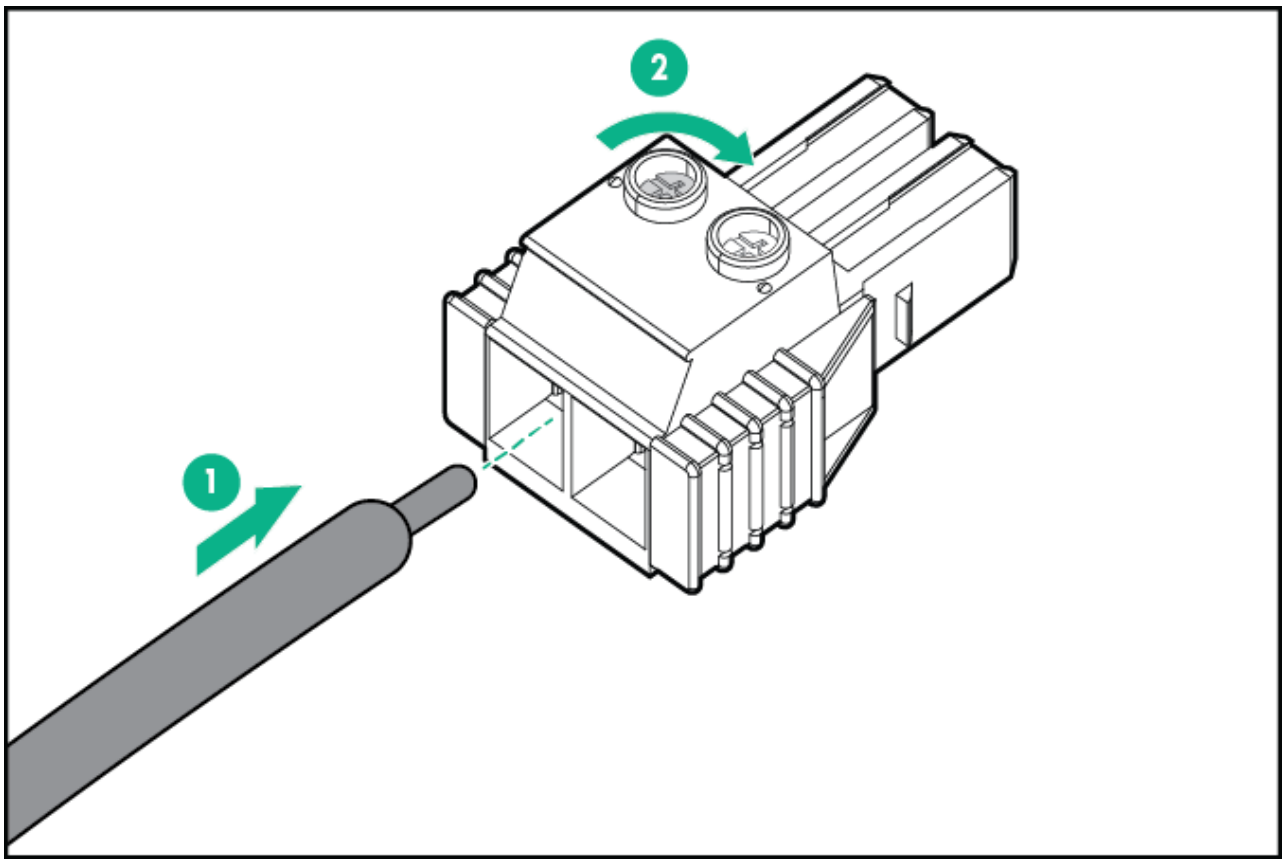

8. Insert the return wire into the right side of the connector, and then tighten the screw to 1.3 N m (10 lb-in) of torque.

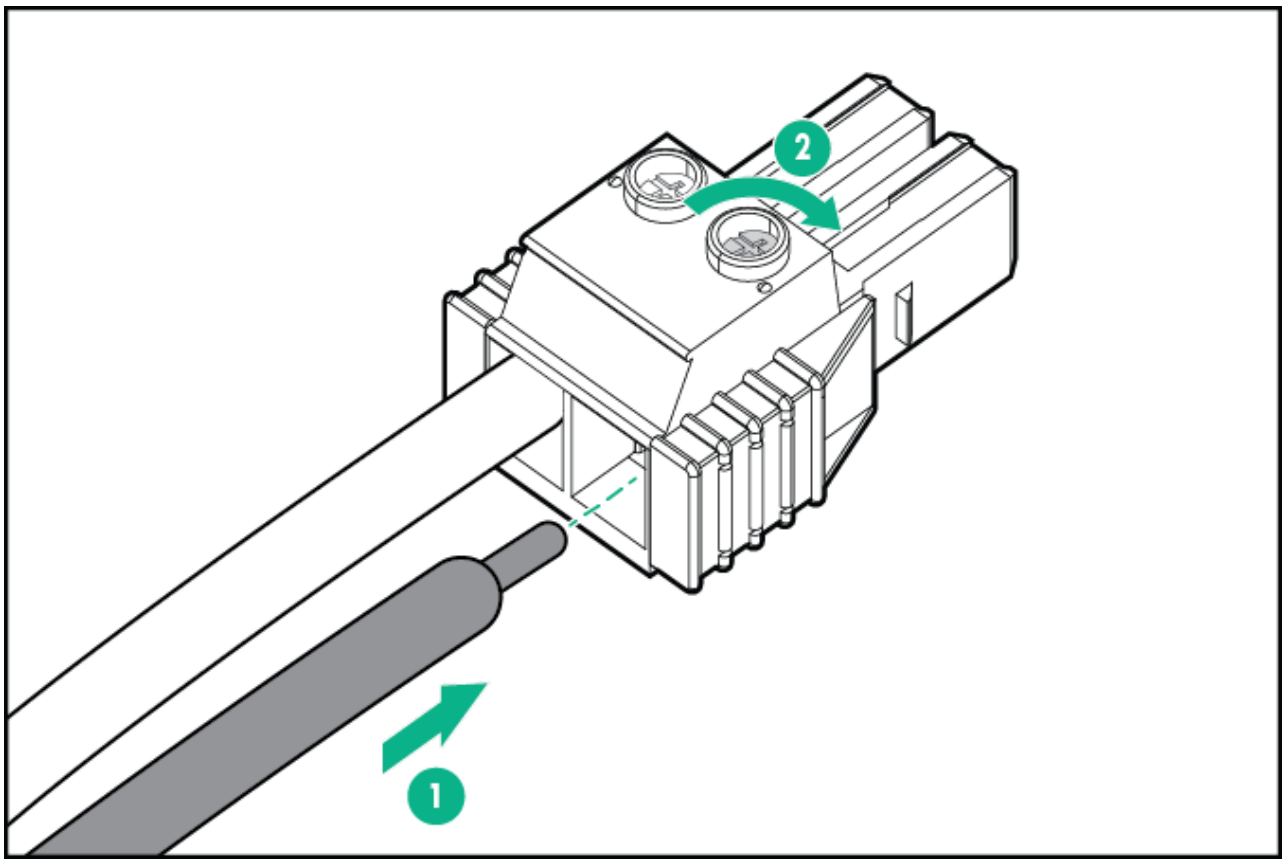

9. Install the terminal block connector into the power supply.

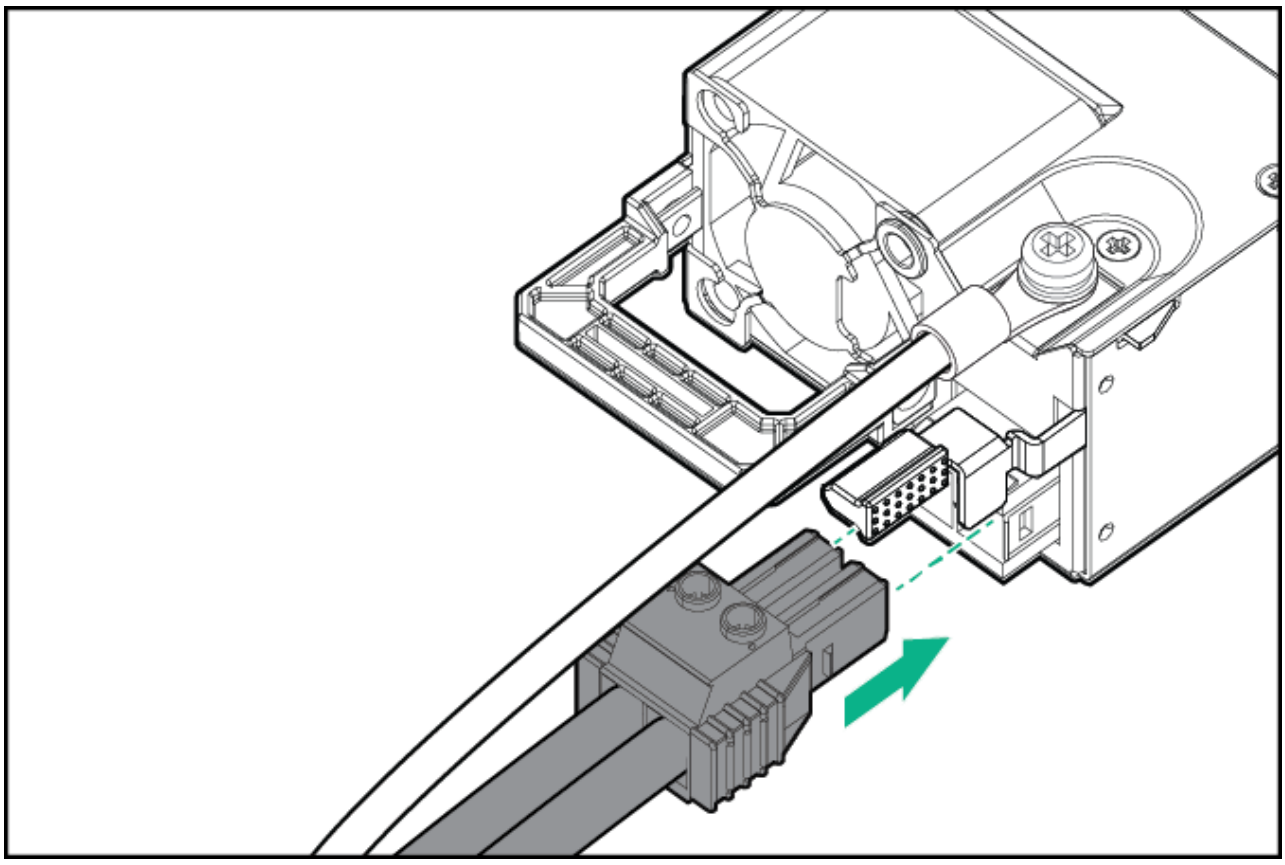

.0. Secure the power cord, wires, and/or cables in the strain relief strap attached to the power supply handle:

a. Unwrap the strain relief strap from the power supply handle.

> **CAUTION:** Avoid tight bend radii to prevent damaging the internal wires of a power cord or a server cable. Never bend power cords and server cables tight enough to cause a crease in the sheathing.

b. Secure the power cord, wires, and cables with the strain relief strap. Roll the extra length of the strap around the power supply handle.

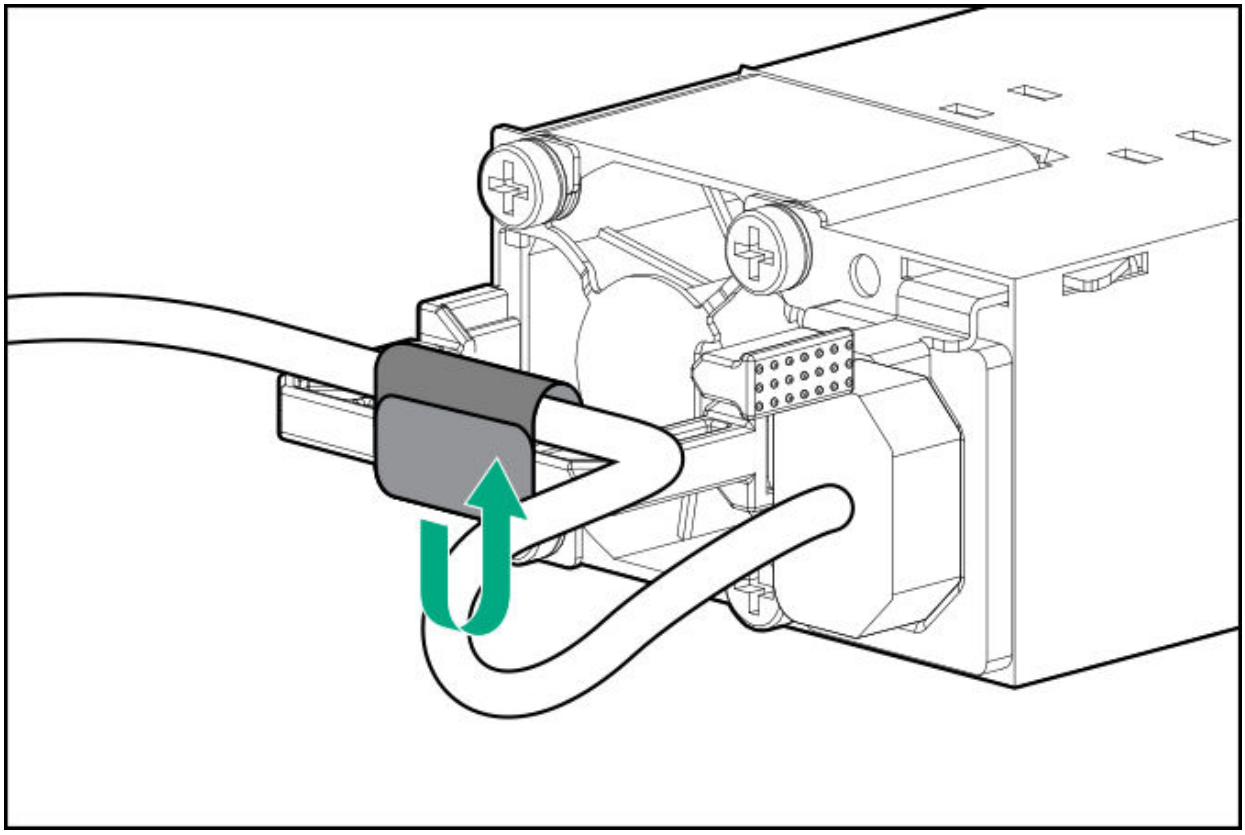

.1. Slide the power supply into the bay until it clicks into place.

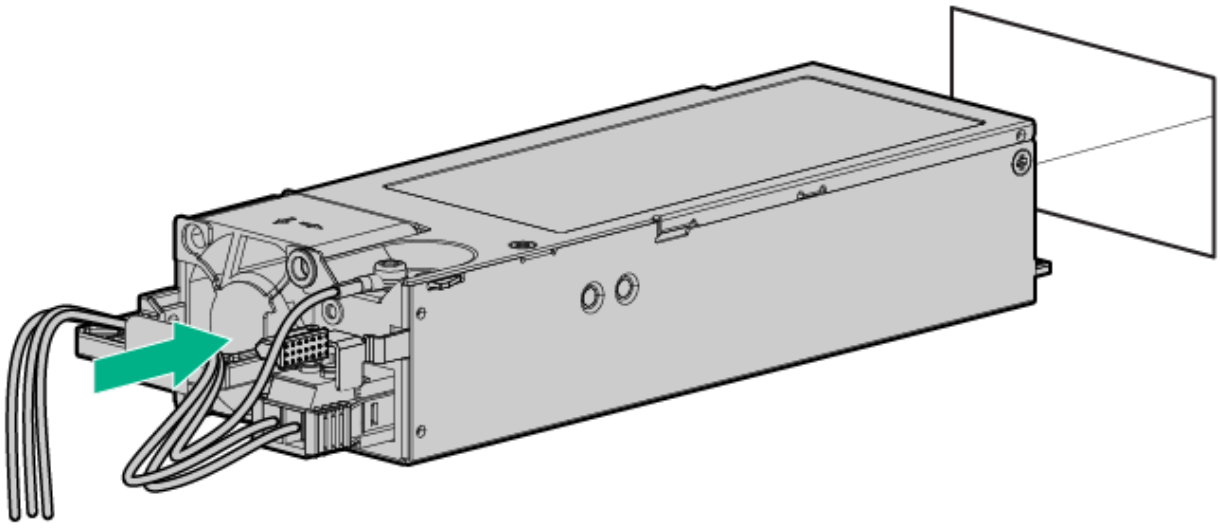

.2. Make sure the -48 V DC power source is off or the PDU breaker is in the off position, and then connect the power cord to the -48 V DC power source or PDU.

.3. To supply -48 V to the power supply, turn on the -48 V power source or switch the PDU breaker to the on position.

.4. Be sure that the power supply LED is green.

Installing the HPE 1600 W Flex Slot -48 VDC hot-plug power supply

The DC power supply option kits do not ship with a Power Supply DC cable Kit and may not include a Power Supply Cable Lug kit. The optional DC Cable kit or the optional DC Cable Lug Kit may be purchased directly from Hewlett Packard Enterprise or an authorized HPE reseller. For additional information, refer to the power supply QuickSpecs at **https://www.hpe.com/info/fsps-qs**.

WARNING:

To reduce the risk of electric shock, fire, and damage to the equipment, you must install this product in accordance with the following guidelines:

- The HPE 1600 W Flex Slot -48 VDC hot-plug power supply is intended only for installation in Hewlett Packard Enterprise servers located in a restricted access location.
- The HPE 1600 W Flex Slot -48 VDC hot-plug power supply is not intended for direct connection to the DC supply branch circuit. Only connect this power supply to a power distribution unit (PDU) that provides an independent overcurrent-protected output for each DC power supply. Each output overcurrent-protected device in the PDU must be suitable for interrupting fault current available from the DC power source and must be rated no more than 45 A.
- The PDU output must have a shut-off switch or a circuit breaker to disconnect power for each power supply. To completely remove power from the power supply, disconnect power at the PDU. The end product may have multiple power supplies. To remove all power from the product, disconnect the power for each power supply.
- In accordance with applicable national requirements for Information Technology Equipment and Telecommunications Equipment, this power supply only connects to DC power sources that are classified as SELV or TNV. Generally, these requirements are based on the International Standard for Information Technology Equipment, IEC 60950-1/IEC 62368-1. In accordance with local and regional electric codes and regulations, the DC source must have one pole (Neutral/Return) reliably connected to earth ground.
- You must connect the power supply ground screw located on the front of the power supply to a suitable ground (earth) terminal. In accordance with local and regional electric codes and regulations, this terminal must be connected to a suitable building ground (earth) terminal. Do not rely on the rack or cabinet chassis to provide adequate ground (earth) continuity.

Prerequisites

Before you install this option, make sure that you have the following items available:

- No. 1 Phillips screwdriver
- If you are not using an input power cord option, the power supply cabling must be made in consultation with a licensed electrician and be compliant with local code.

- Optional P36877-B21 HPE lug kit can be purchased from an HPE authorized reseller for use with customer-supplied power cables. (The power cable and lug kit listed below can only be used with the 1600 W -48 VDC power supply.)
- If you are using an input power cord option, the P22173-B21 HPE 1600 W DC PSU power cable kit can be purchased from an authorized HPE reseller. (The power cable and lug kit listed below can only be used with the 1600 W -48 VDC power supply.)

1600 W -48VDC power cable color codes

Cable color	Description
Black	Positive return
Red	Negative input voltage
Green/yellow	Safety ground

Procedure

1. If necessary, remove the power supply blank.

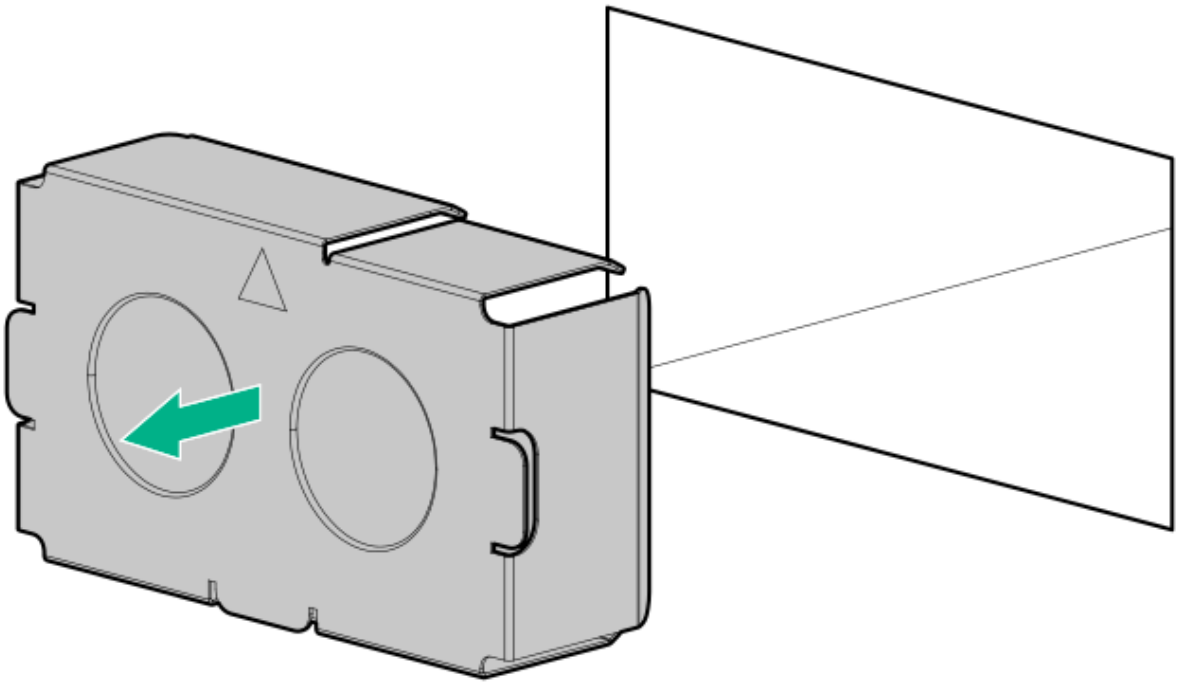

2. Remove the clear plastic cover on the side of the power supply.

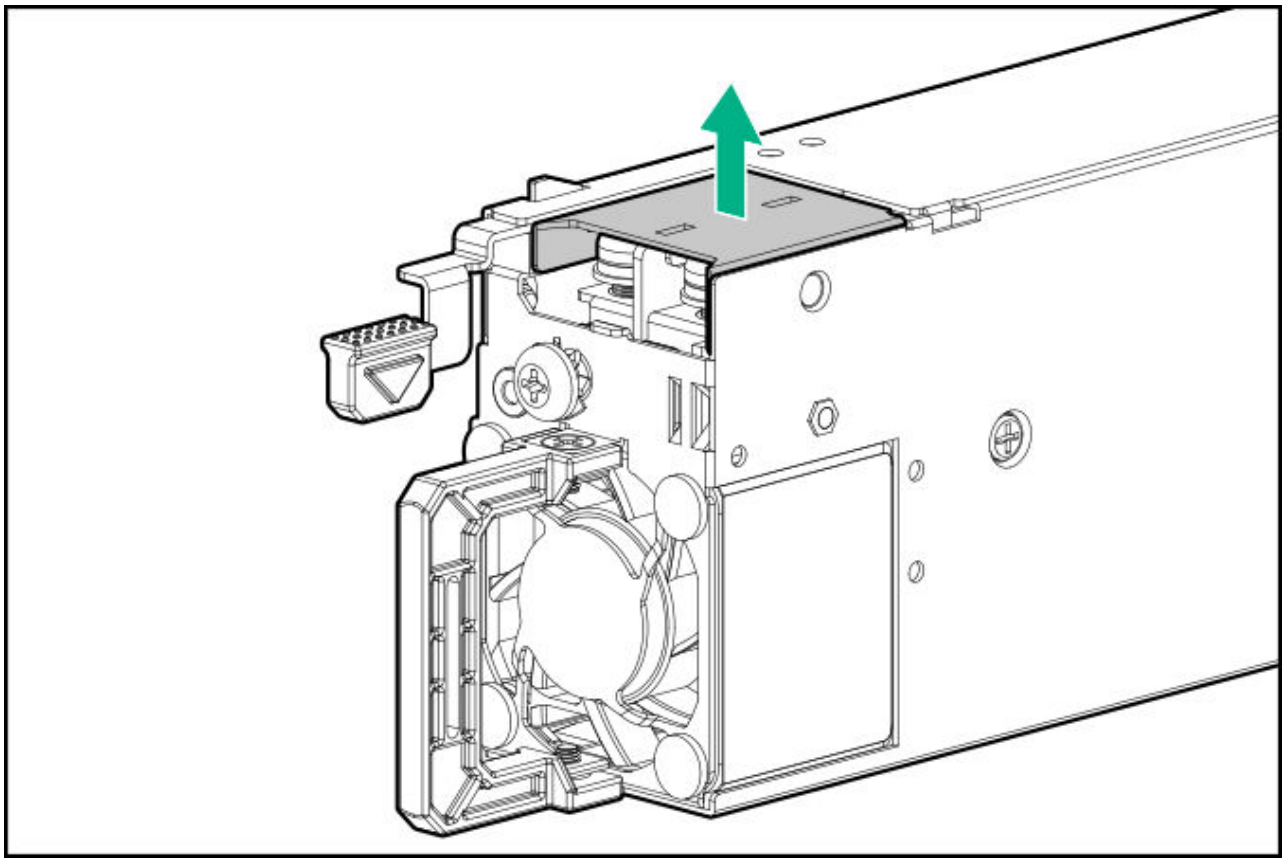

3. Do the following:

   a. Remove the grounding screw from the front of the power supply.

   b. Remove the four screws from the -48 V wire and return wire connectors.

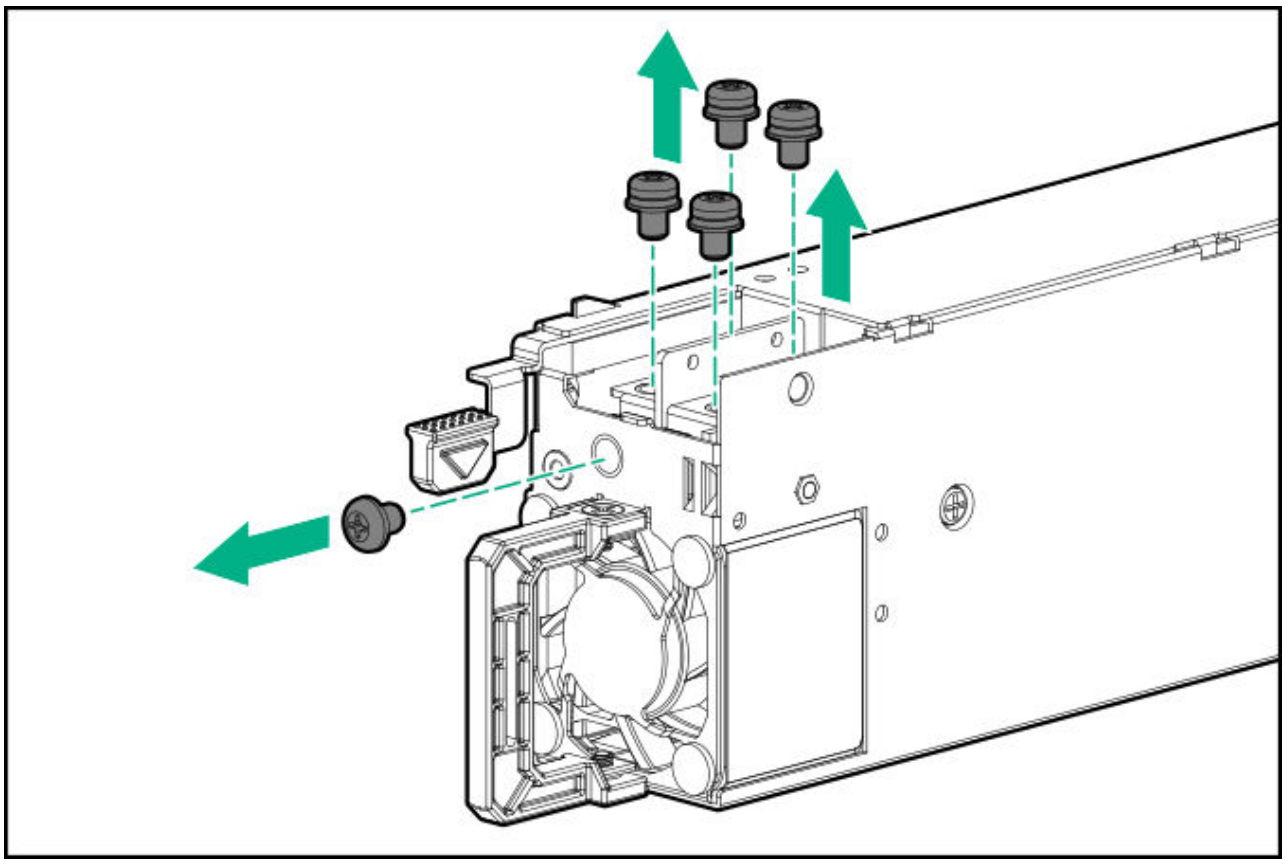

4. Attach the -48 V wire and the return wire to the connectors as marked and tighten to 0.98 N m (8.68 lb-in) of torque.

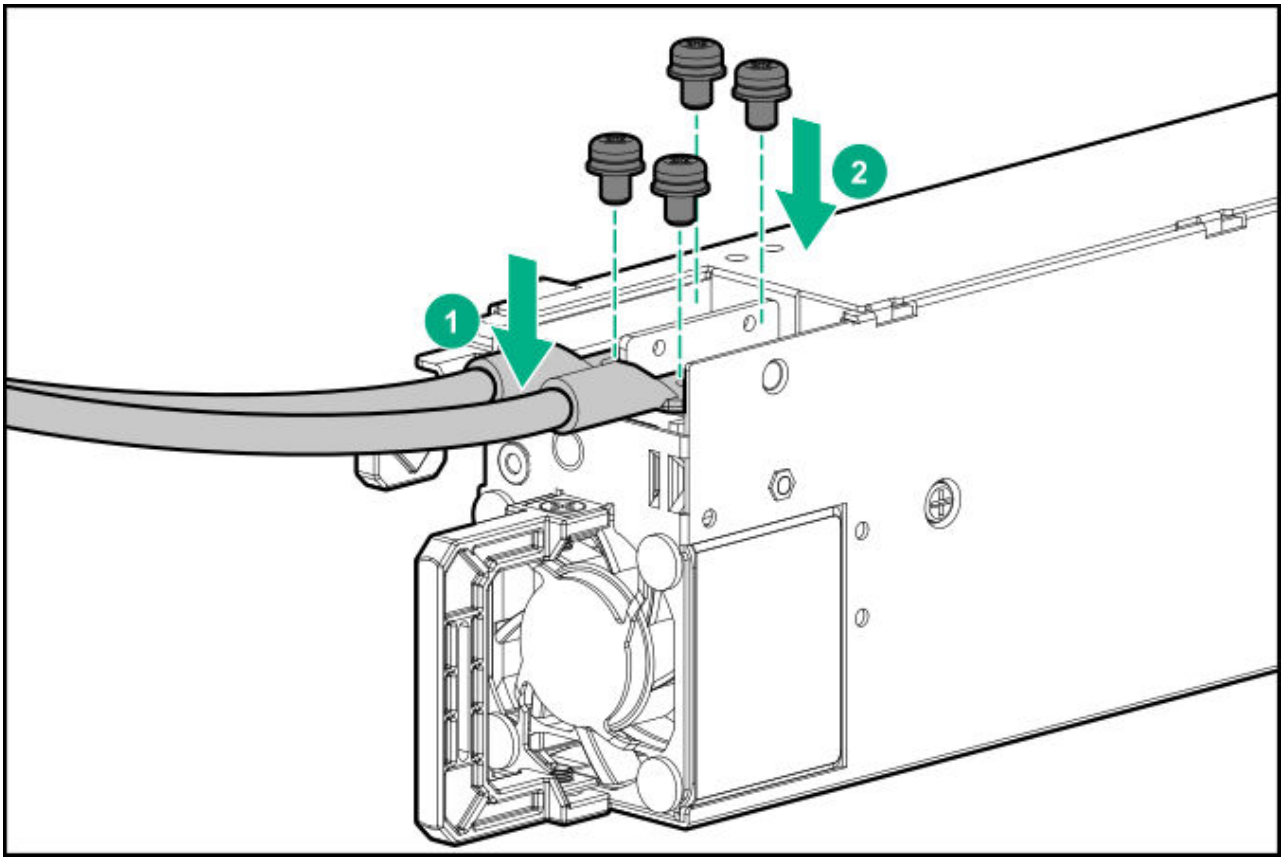

5. Attach the ground (earthed) wire to the ground screw and tighten to 1.47 N m (13 lb-in) of torque.

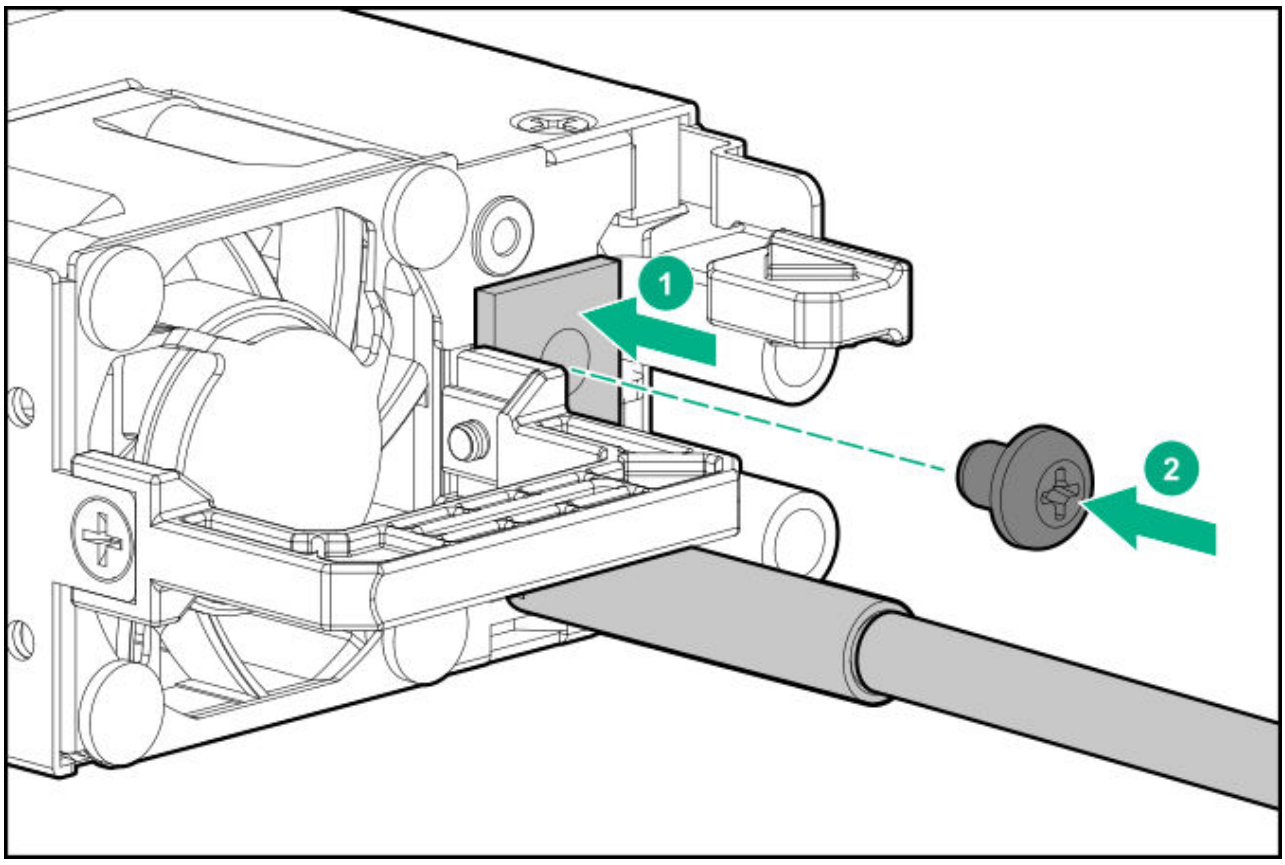

6. Replace the clear plastic cover on the -48 V and return connectors.
7. Secure the power cord, wires, and/or cables in the strain relief strap attached to the power supply handle:
   a. Unwrap the strain relief strap from the power supply handle.

> **CAUTION:** Avoid tight bend radii to prevent damaging the internal wires of a power cord or a server cable. Never bend power cords and server cables tight enough to cause a crease in the sheathing.

   b. Secure the wires and cables with the strain relief strap. Roll the extra length of the strap around the power supply handle.

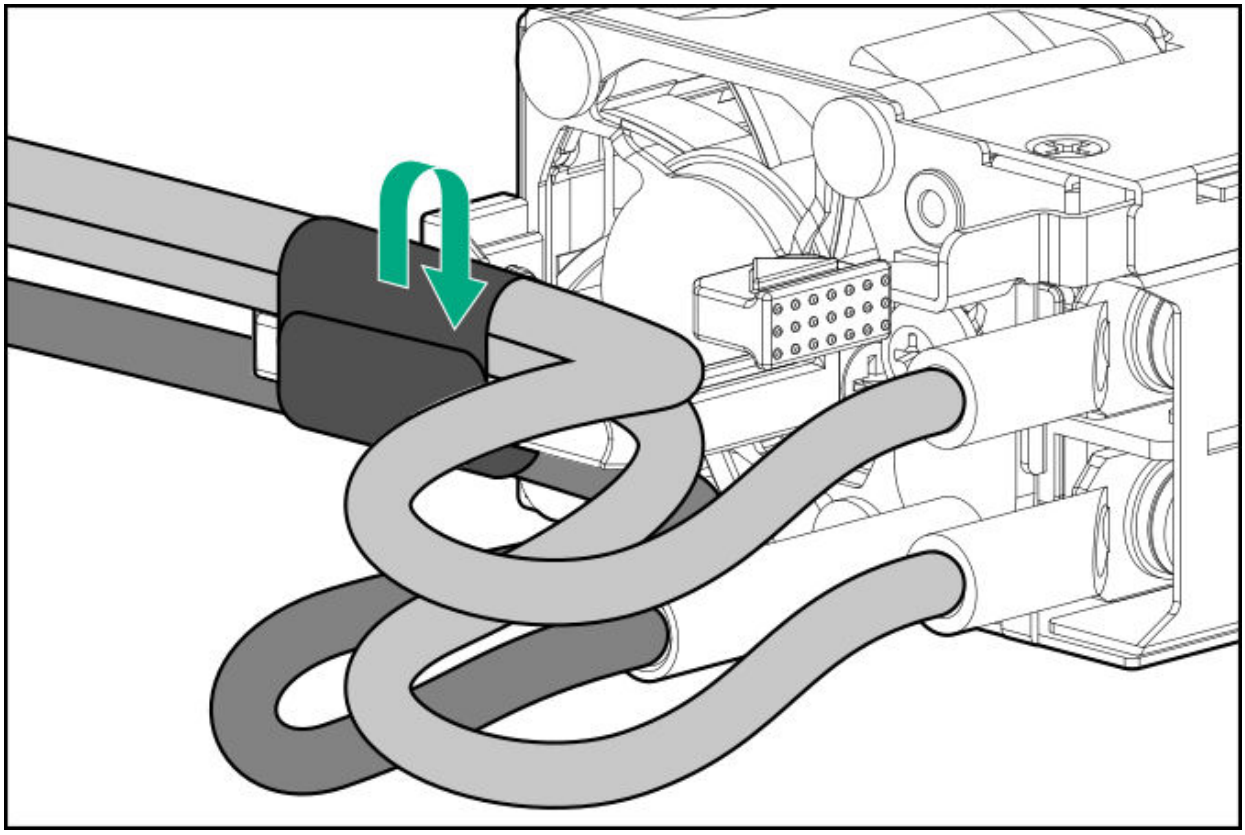

8. Slide the power supply into the bay until it clicks into place.
9. Make sure the -48 VDC power source is off or the PDU breaker is in the off position.
10. Connect the power cord to the -48 VDC power source or PDU.
11. Turn on the -48 V power source or switch the PDU breaker to the on position to supply -48 V to the power supply.
12. Make sure that the power supply LED is green.

Connecting a DC power cable to a DC power source

WARNING:

To reduce the risk of electric shock or energy hazards:

- This equipment must be installed by trained service personnel, as defined by the NEC and IEC 60950-1/IEC 62368-1, the standard for Safety of Information Technology Equipment.
- Connect the equipment to a reliably grounded secondary circuit source. A secondary circuit has no direct connection to a primary circuit and derives its power from a transformer, converter, or equivalent isolation device.
- The overcurrent protection for the DC source must not exceed 45 A.

WARNING:

When installing a DC power supply, the ground wire must be connected before the positive or negative leads.

WARNING:

Remove power from the power supply before performing any installation steps or maintenance on the power supply.

CAUTION:

The server equipment connects the earthed conductor of the DC supply circuit to the earthing conductor at the equipment. For more information, see the documentation that ships with the power supply.

CAUTION:

If a DC connection exists between the earthed conductor of the DC supply circuit and the earthing conductor at the server equipment, the following conditions must be met:

- This equipment must be connected directly to the DC supply system earthing electrode conductor or to a bonding jumper from an earthing terminal bar or bus to which the DC supply system earthing electrode conductor is connected.
- Locate the equipment in the same immediate area (such as adjacent cabinets) as any other equipment that has a connection between the earthed conductor of the same DC supply circuit and the earthing conductor, and also the point of earthing of the DC system. The DC system must be earthed elsewhere.
- The DC supply source is to be located within the same premises as the equipment.
- Switching or disconnecting devices should not be in the earthed circuit conductor between the DC source and the point of connection of the earthing electrode conductor.

Procedure

1. Cut the DC power cord ends no shorter than 150 cm (59.06 in).

   IMPORTANT:

   The ring terminals must be UL approved and accommodate 12 gauge wires.

   IMPORTANT:

   The minimum nominal thread diameter of a pillar or stud type terminal must be 3.5 mm (0.138 in). The diameter of a screw type terminal must be 5.0 mm (0.197 in).

2. If the power source requires ring tongues, use a crimping tool to install the ring tongues on the power cord wires.
3. Stack each same-colored pair of wires and then attach them to the same power source. The power cord consists of three wires (black, red, and green).

   For more information, see the documentation that ships with the power supply.

Installing a Universal Media Bay

Prerequisites

Before you perform this procedure, make sure that you have the following items available:

- The components included with the hardware option kit
- T-10 Torx screwdriver

Procedure

1. Power down the server.
2. Remove all power:
   a. Disconnect each power cord from the power source.
   b. Disconnect each power cord from the server.
3. Do one of the following:
   - Extend the server from the rack.
   - Remove the server from the rack.
4. Remove the access panel.
5. Remove the air baffle.
6. Remove the fan cage.
7. Remove the bay blank.

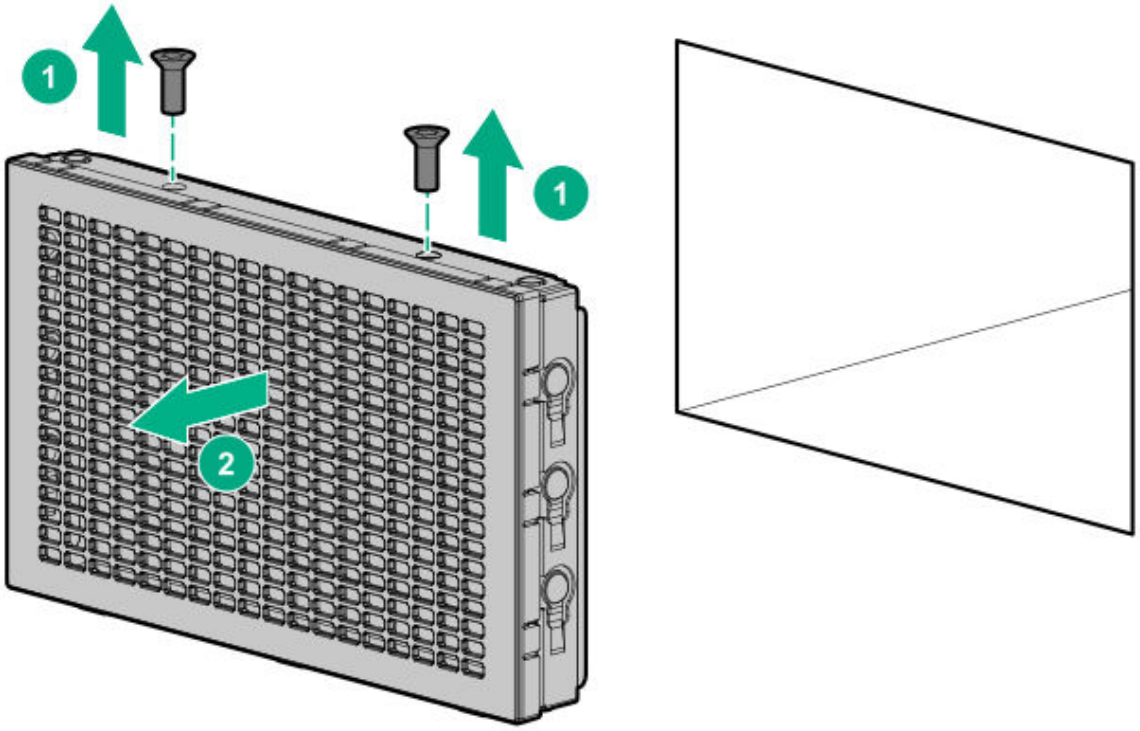

8. Route the USB and video cables through the opening.
9. If installing a two-bay SFF front drive cage, install the drive cage.
.0. Install the universal media bay.

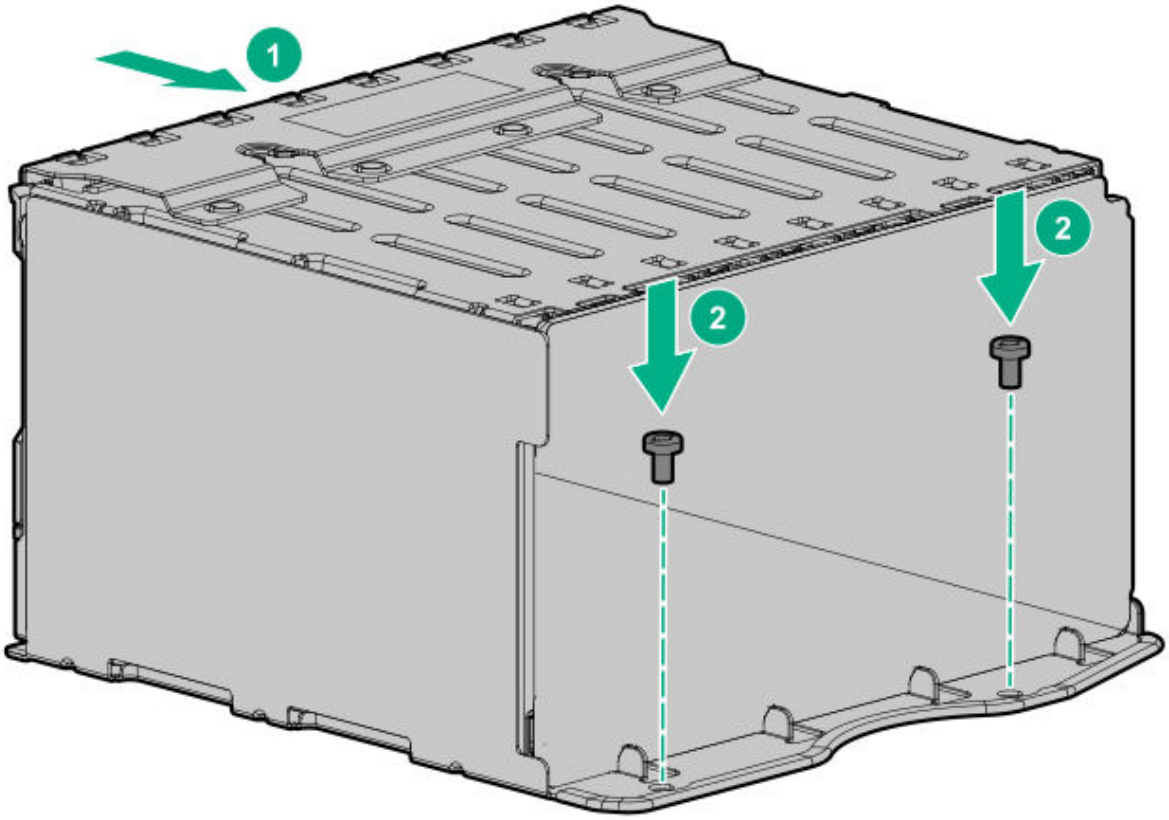

.1. (Optional) Install the optical disc drive.

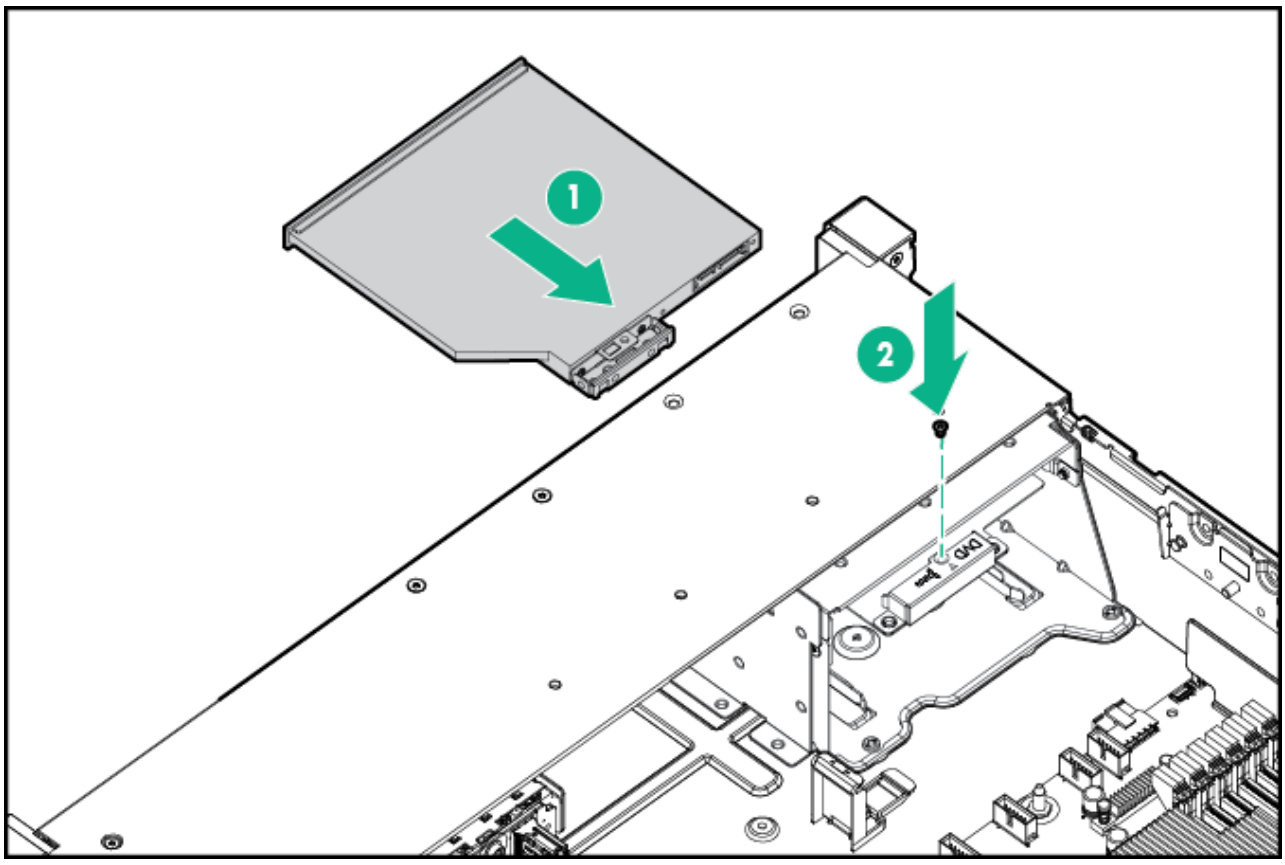

.2. Connect the cables.

.3. Install the fan cage.

.4. Install the air baffle.

.5. Install the access panel.

.6. Slide the server into the rack.

.7. Connect each power cord to the server.

.8. Connect each power cord to the power source.

.9. Power up the server.

The installation is complete.

Drive cage options

Installing a front 8NVMe SSD Express Bay drive cage

Observe the following:

- The drive cage can be installed in any box. This procedure covers installing the drive cage in box 1.
- When installing in box 1, the NVMe riser must be installed in the tertiary PCIe slot.
- When installing in box 2, the NVMe riser must be installed in the secondary PCIe slot.
- When installing in box 3, the NVMe riser must be installed in the primary PCIe slot.

Prerequisites

An associated NVMe riser and high-performance fans are required when installing this option.

Procedure

1. Observe the following alerts.

   WARNING: To reduce the risk of personal injury from hot surfaces, allow the drives and the internal system components to cool before touching them.

   CAUTION: To prevent damage to electrical components, properly ground the server before beginning any installation procedure. Improper grounding can cause ESD.

2. Power down the server.
3. Do one of the following:
   - Extend the server from the rack.
   - Remove the server from the rack.
4. Remove the access panel.
5. Remove the air baffle.
6. Remove the fan cage.
7. Remove the blank.

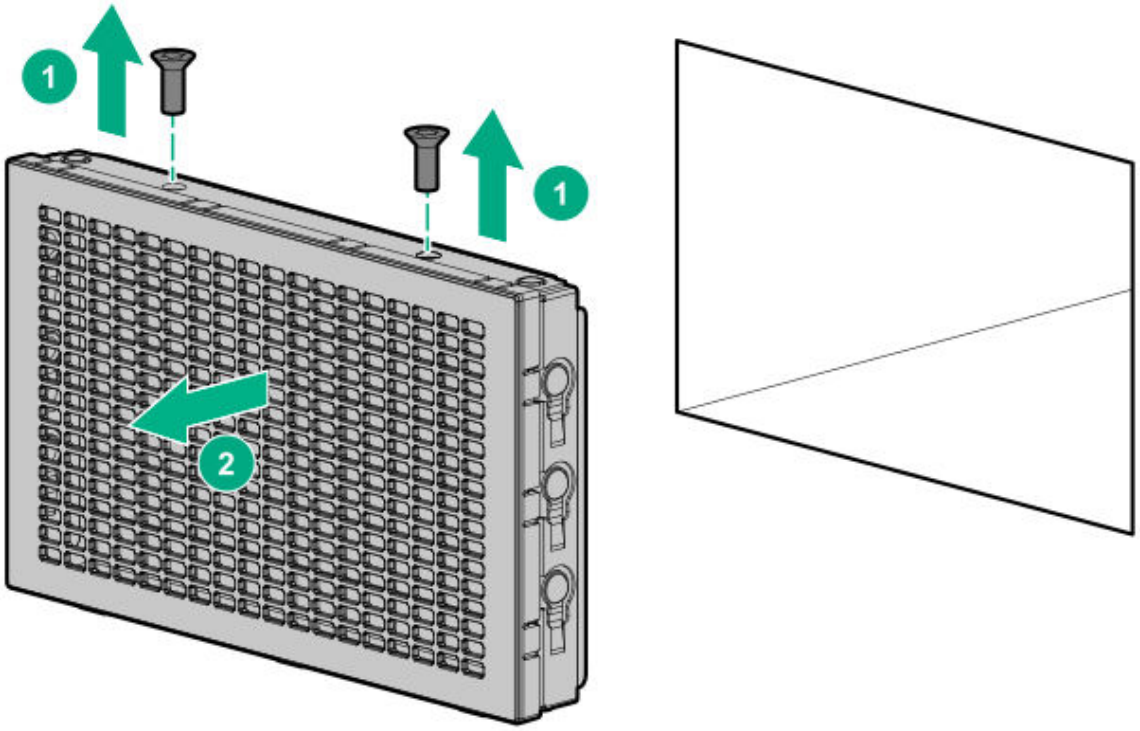

8. Install the drive cage:
   a. Remove all drives and drive blanks.
   b. Install the drive cage.

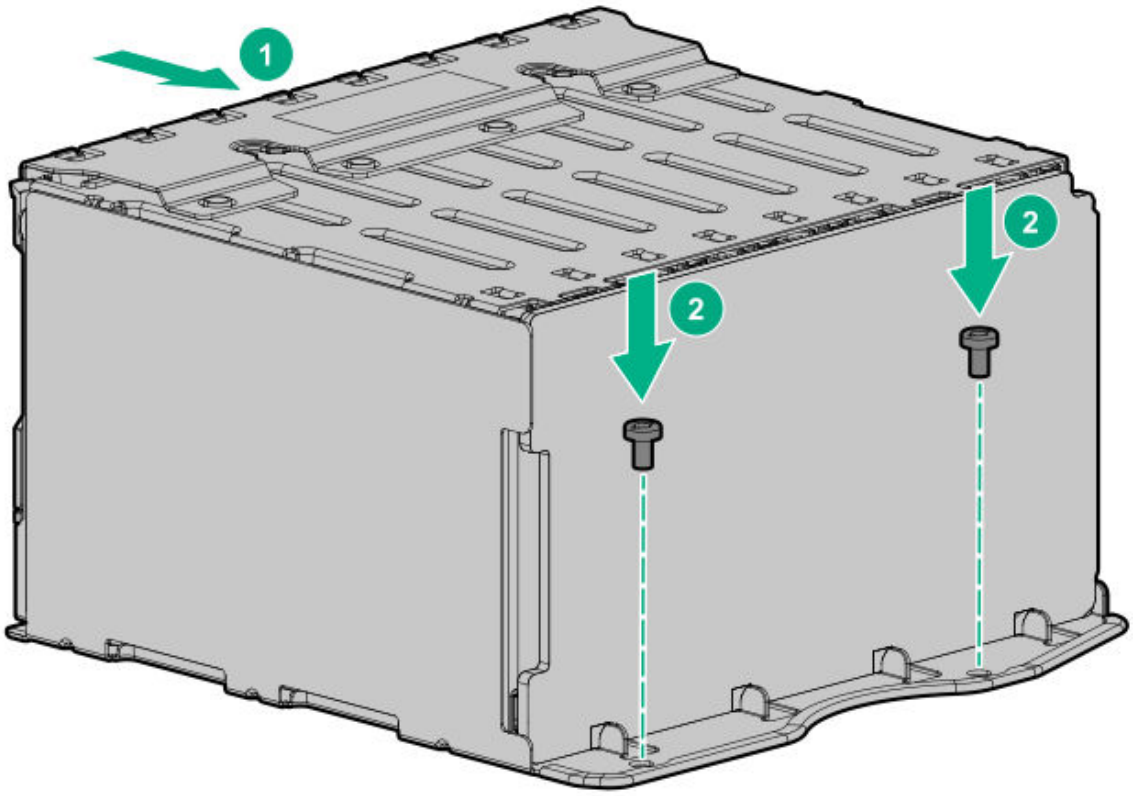

9. Install the associated NVMe riser.
10. Connect the power cable to the drive backplane power connector.
11. Connect the data cables from the drive backplane to the NVMe riser.
12. Install drives or drive blanks.

The installation is complete.

Installing a front 6 SFF SAS/SATA + 2 NVMe Premium drive cage

The drive cage can be installed in any box. This procedure covers installing the drive cage in box 1.

Prerequisites

A storage controller and high-performance fans are required when installing this drive cage.

Procedure

1. Observe the following alerts.

WARNING: To reduce the risk of personal injury from hot surfaces, allow the drives and the internal system components to cool before touching them.

CAUTION: To prevent damage to electrical components, properly ground the server before beginning any installation procedure. Improper grounding can cause ESD.

2. Power down the server.
3. Do one of the following:
   - Extend the server from the rack.
   - Remove the server from the rack.
4. Remove the access panel.
5. Remove the air baffle.
6. Remove the fan cage.
7. Remove the blank.

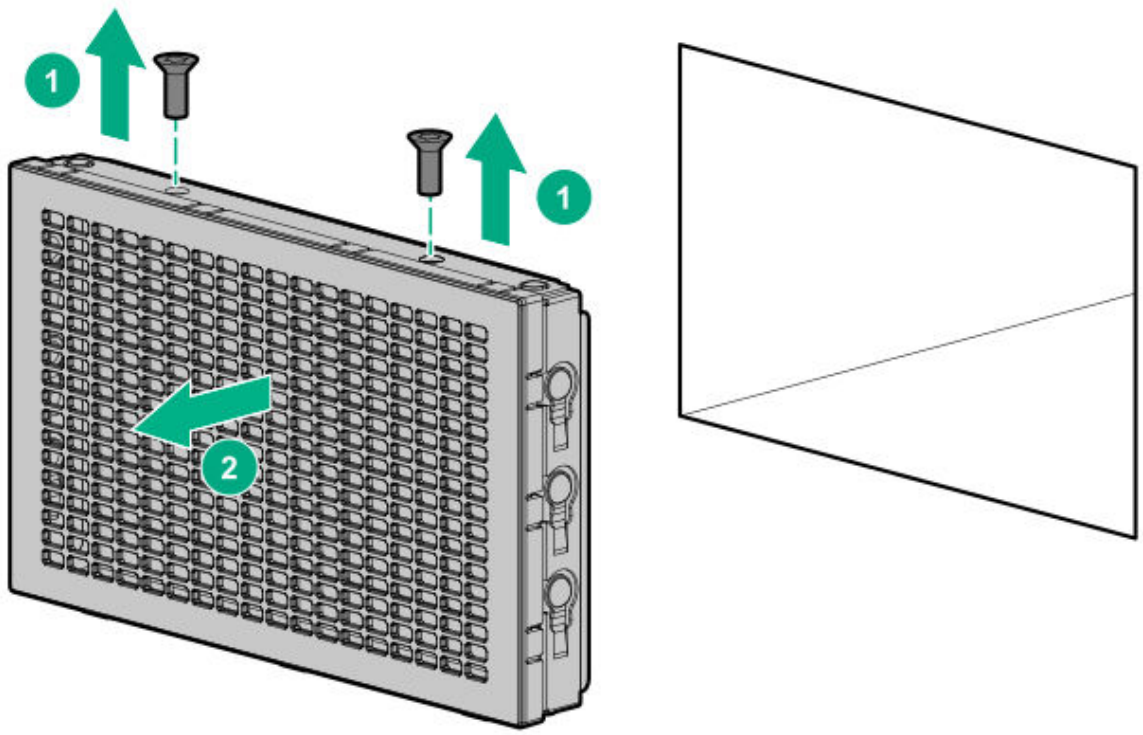

8. Install the drive cage:

   a. If drive blanks are installed in the drive cage assembly, remove the drive blanks. Retain the drive blanks for use in empty drive bays.

   b. Install the drive cage.

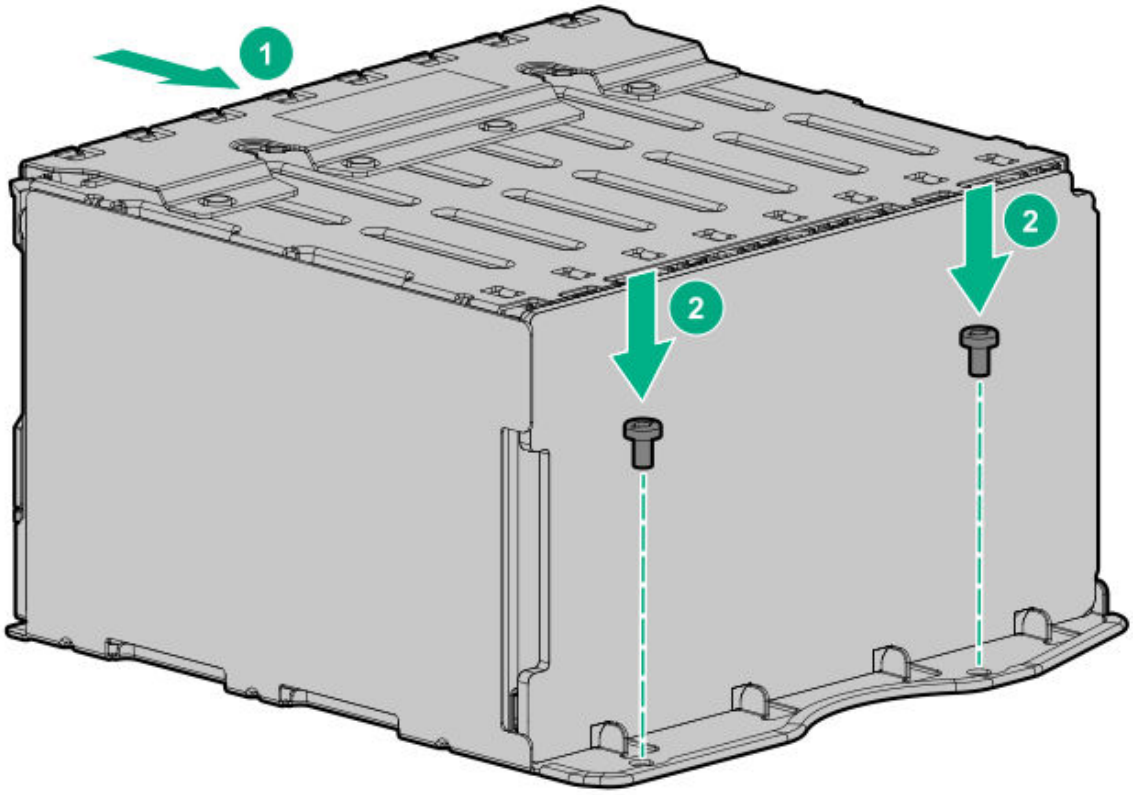

9. Connect the power cable.
10. Install a storage controller.
11. Connect the data cables from the drive backplane to the controller.
12. Install drives or drive blanks.

The installation is complete.

Installing a front 8 SFF SAS/SATA drive cage in box 1

Prerequisites

Before you perform this procedure, make sure that you have the following items available:

- T-15 Torx screwdriver
- The components included with the hardware option kit

Procedure

1. Power down the server.
2. Remove all power:
   a. Disconnect each power cord from the power source.
   b. Disconnect each power cord from the server.
3. Do one of the following:
   - Extend the server from the rack.
   - Remove the server from the rack.
4. Remove the access panel.
5. Remove the air baffle.
6. Remove the fan cage.
7. Remove the bay blank.

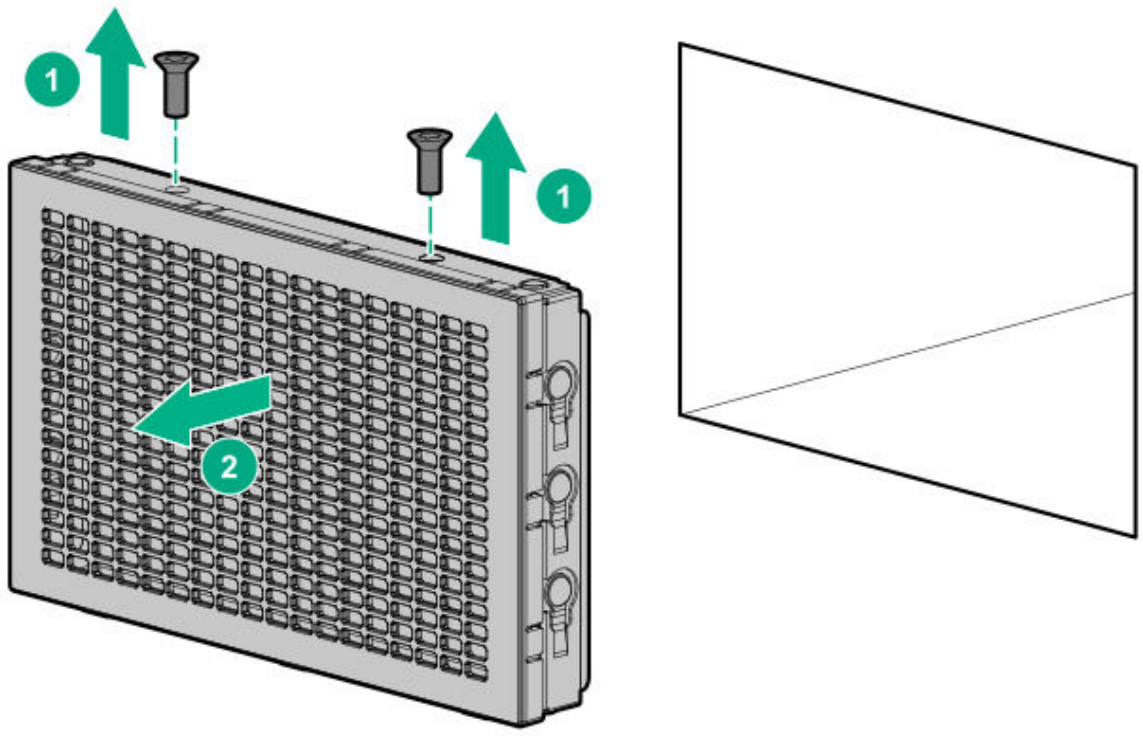

8. Install the 8 SFF front drive cage option.

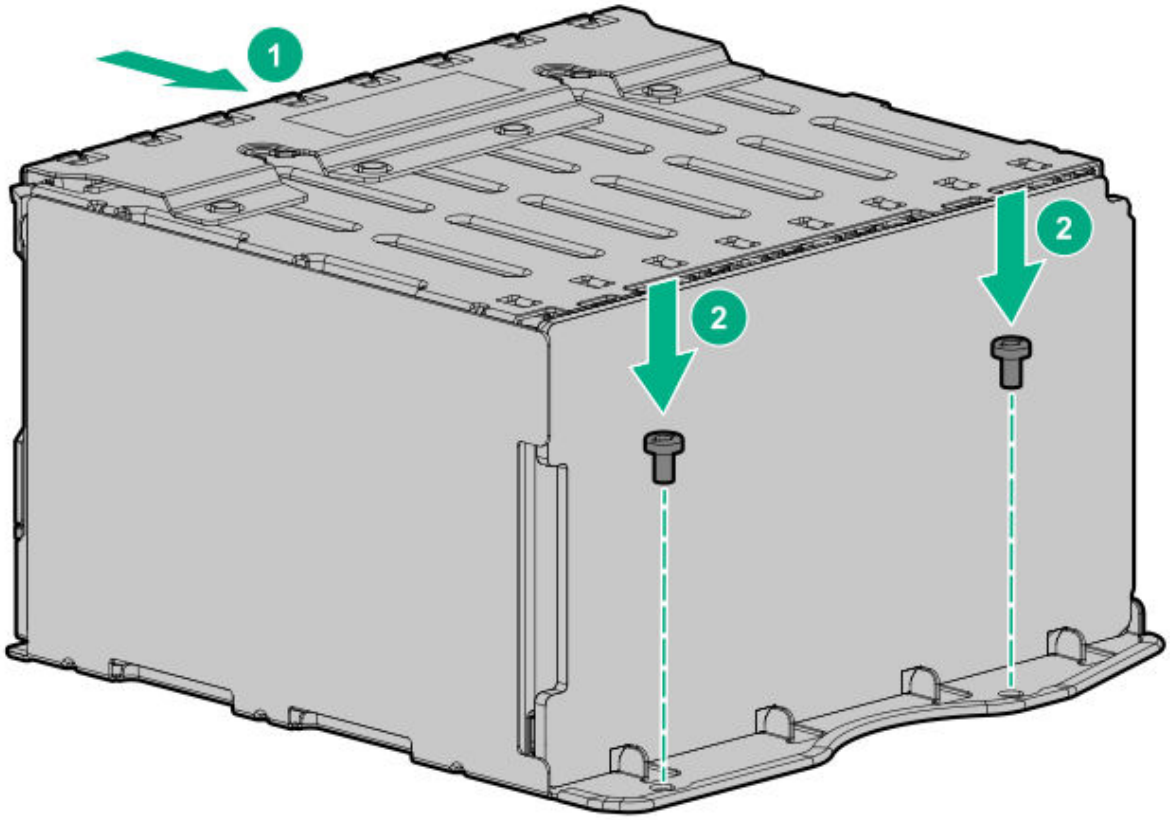

9. Connect the power and data cables.
0. Install the fan cage.
1. Install the air baffle.
2. Install the access panel.
3. Slide the server into the rack.
4. Connect each power cord to the server.
5. Connect each power cord to the power source.
6. Power up the server.

The installation is complete.

Installing a front 8 SFF SAS/SATA drive cage in box 2

Prerequisites

Before you perform this procedure, make sure that you have the following items available:

- T-15 Torx screwdriver
- The components included with the hardware option kit

Procedure

1. Power down the server.
2. Remove all power:
   a. Disconnect each power cord from the power source.
   b. Disconnect each power cord from the server.
3. Do one of the following:
   - Extend the server from the rack.
   - Remove the server from the rack.
4. Remove the access panel.
5. Remove the air baffle.
6. Remove the fan cage.
7. Remove the bay blank.

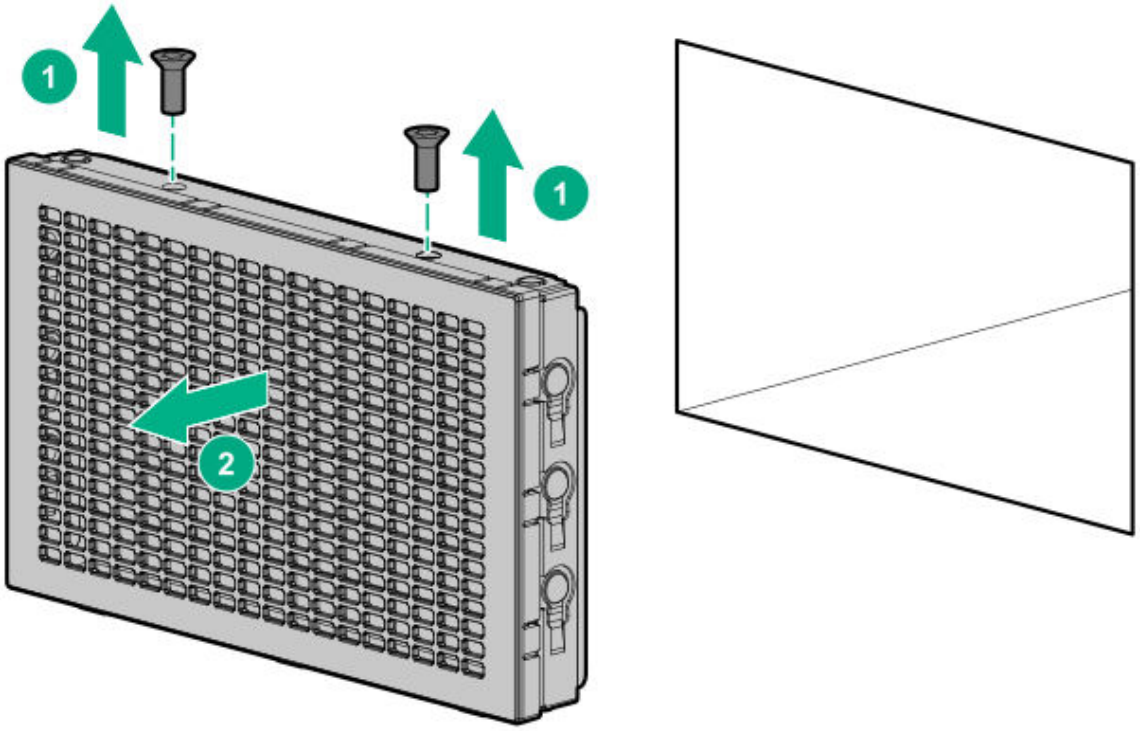

8. Install the 8 SFF front drive cage option.

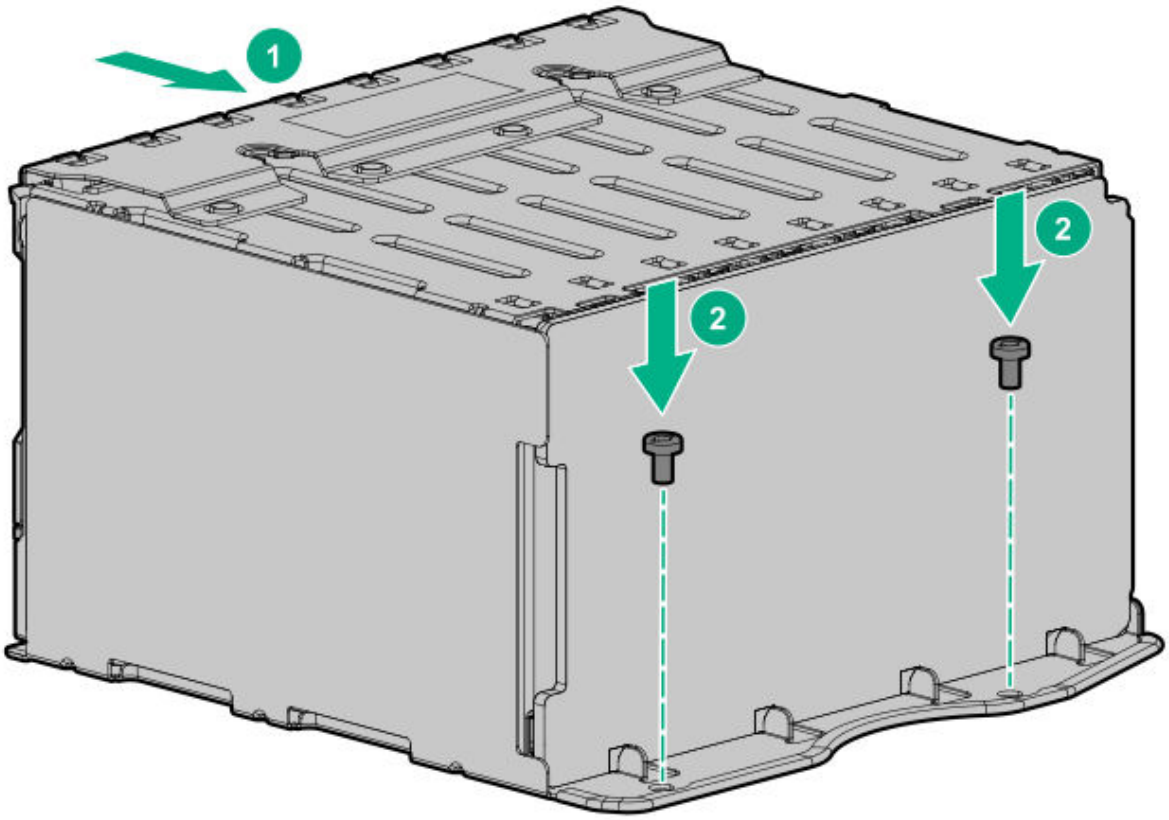

9. Connect the power and data cables.
10. Install the fan cage.
11. Install the access panel.
12. Slide the server into the rack.
13. Connect each power cord to the server.
14. Connect each power cord to the power source.
15. Power up the server.

The installation is complete.

Installing a front 2 SFF NVMe/SAS/SATA Premium drive cage

Prerequisites

Before you perform this procedure, make sure that you have the following items available:

- T-10 Torx screwdriver
- The components included with the hardware option kit
- This installation requires a universal media bay.

Procedure

1. Power down the server.
2. Remove all power:
   a. Disconnect each power cord from the power source.
   b. Disconnect each power cord from the server.
3. Do one of the following:
   - Extend the server from the rack.
   - Remove the server from the rack.
4. Remove the access panel.
5. Remove the front bay blank.

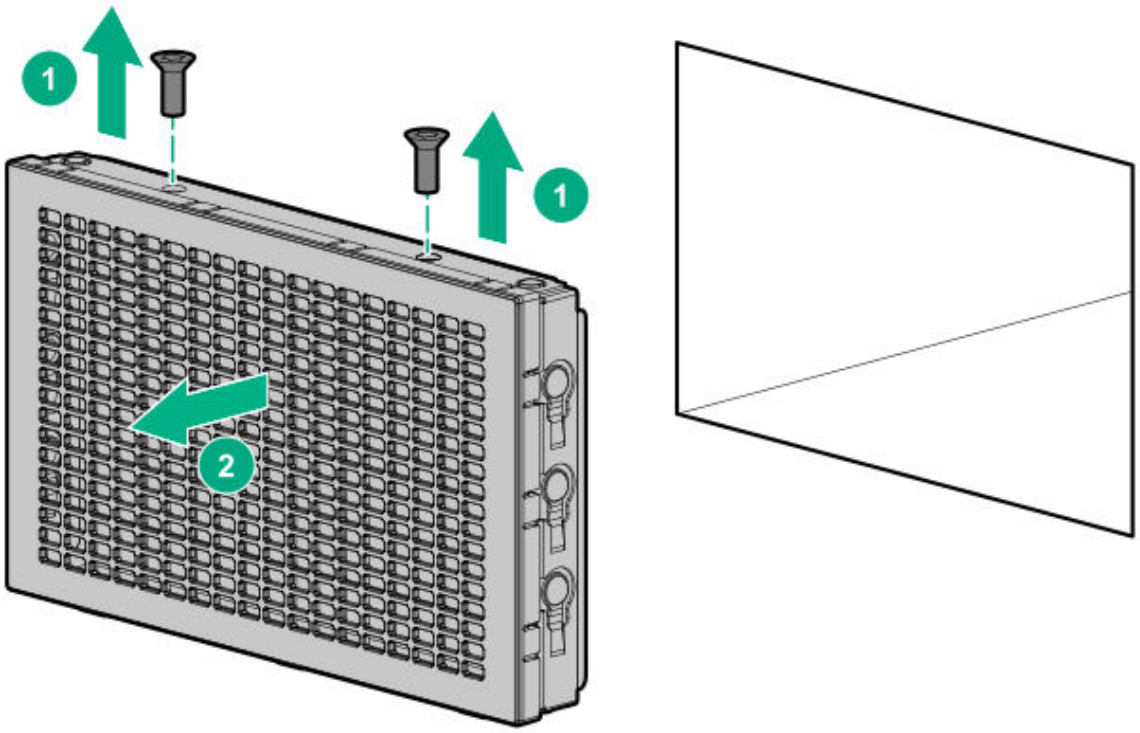

6. Remove the optical disc drive tray from the universal media bay.

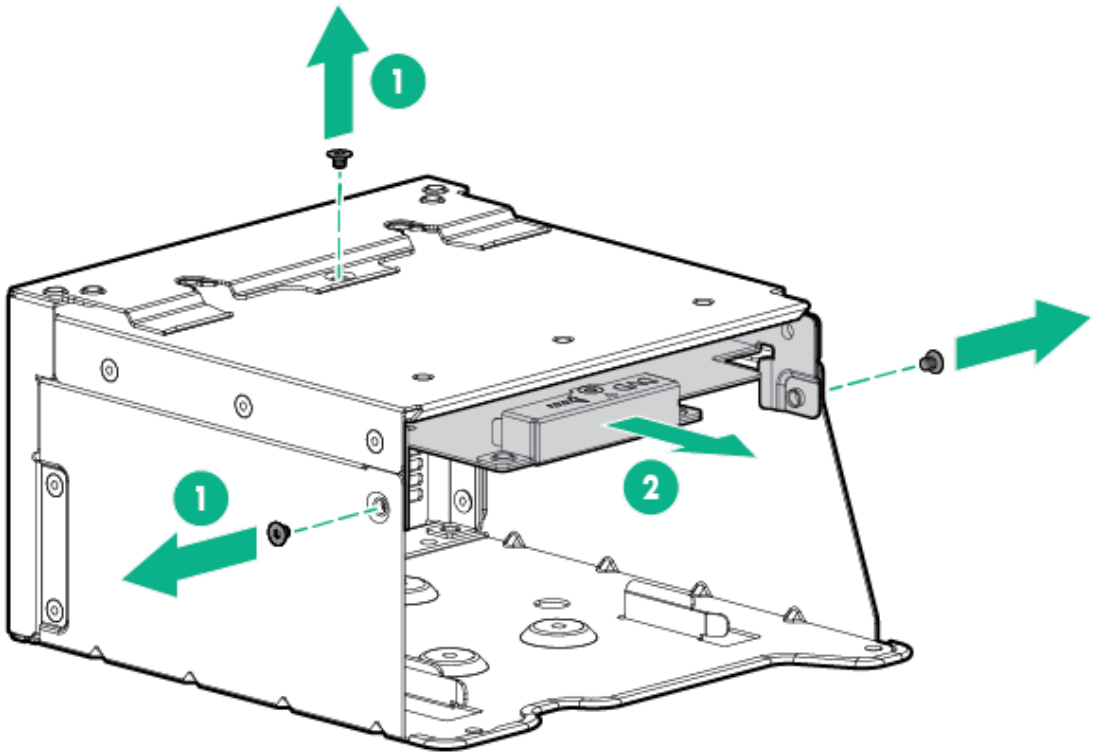

7. Remove the SFF drive blank from the universal media bay.

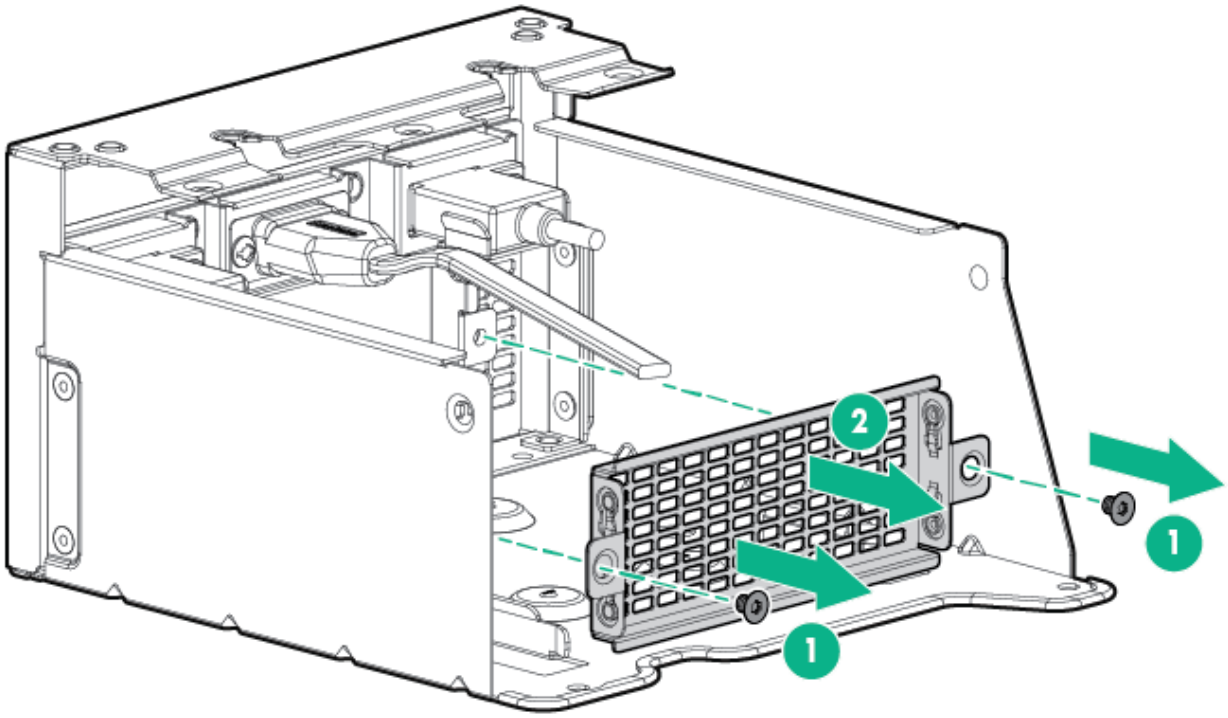

8. Install the drive cage into the universal media bay.

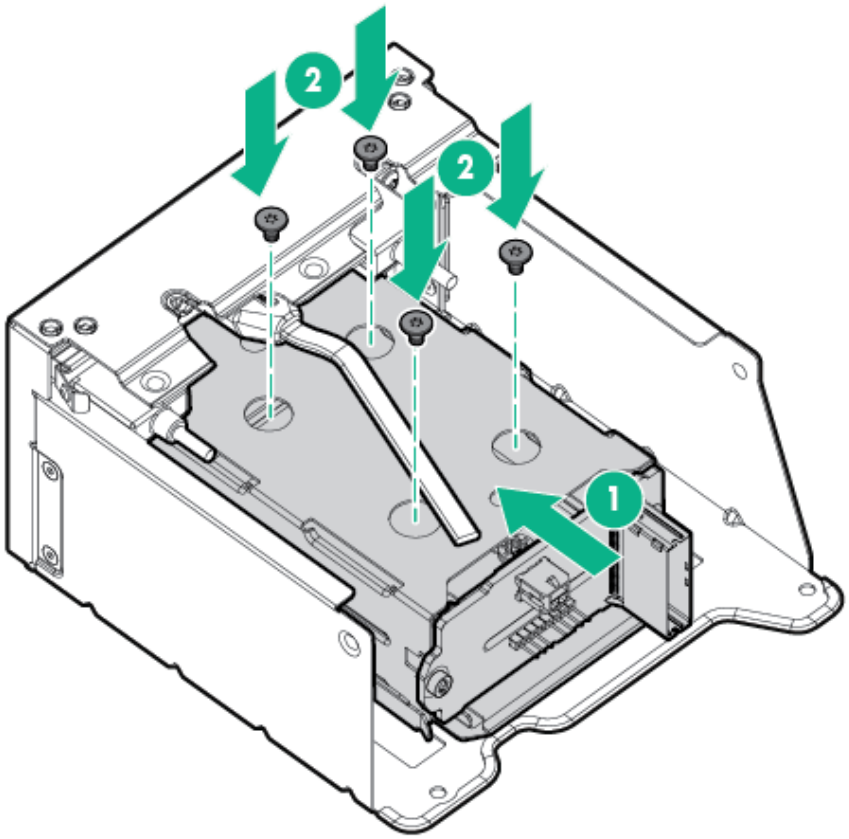

9. Install the optical disc drive tray.

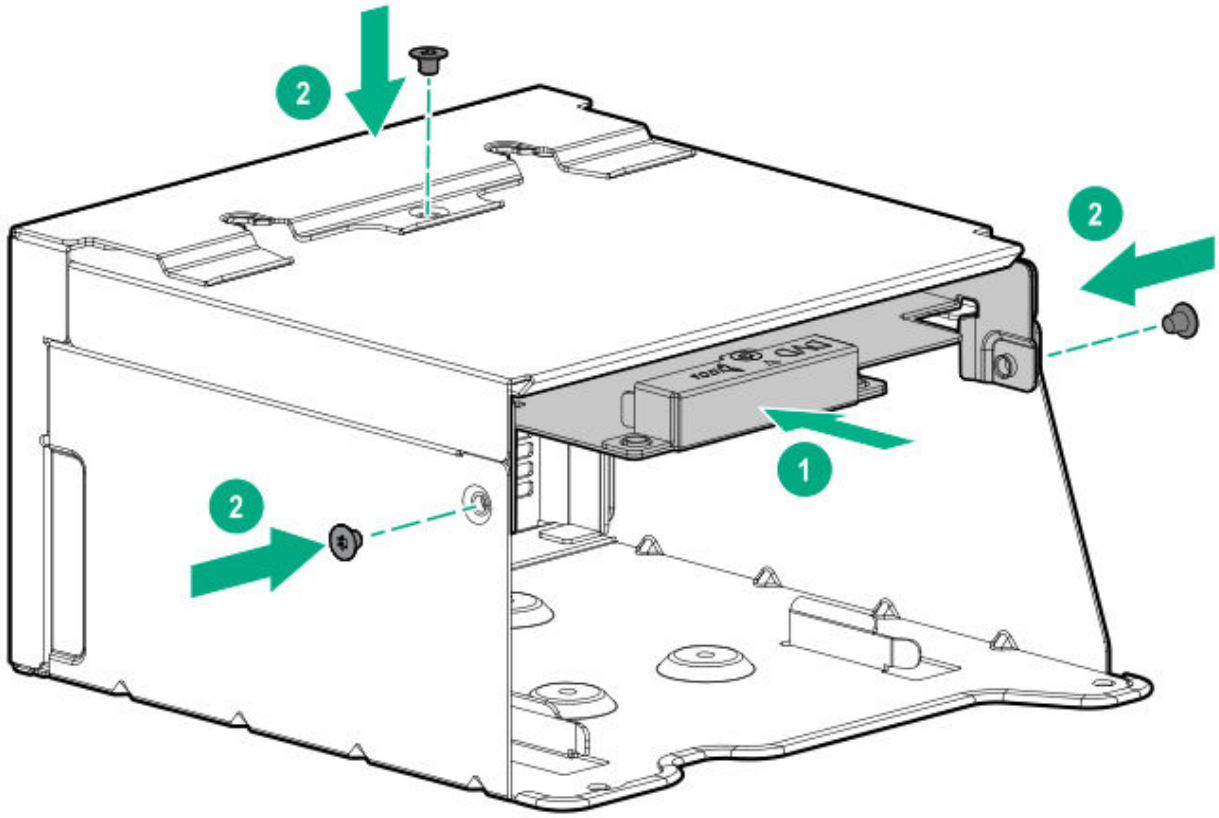

.0. Install the Universal Media Bay.

.1. Connect the power and data cables.

.2. Install the access panel.

.3. Slide the server into the rack.

.4. Connect each power cord to the server.

.5. Connect each power cord to the power source.

.6. Power up the server.

The installation is complete.

Installing a midplane 4 LFF SAS/SATA drive cage

Observe the following:

- A 1U heatsink is required for each processor when installing this option.
- If you have a TPM, install it prior to this option.
- If you have a type-a controller, install it prior to this option.

Prerequisites

Before you perform this procedure, make sure that the components included with the hardware option kit are available.

Procedure

1. Power down the server.
2. Remove all power:
   a. Disconnect each power cord from the power source.
   b. Disconnect each power cord from the server.
3. Do one of the following:
   - Extend the server from the rack.
   - Remove the server from the rack.
4. Remove the access panel.
5. Remove the air baffle.

   The air baffle is no longer needed. The drive cage acts as an air baffle for the server.

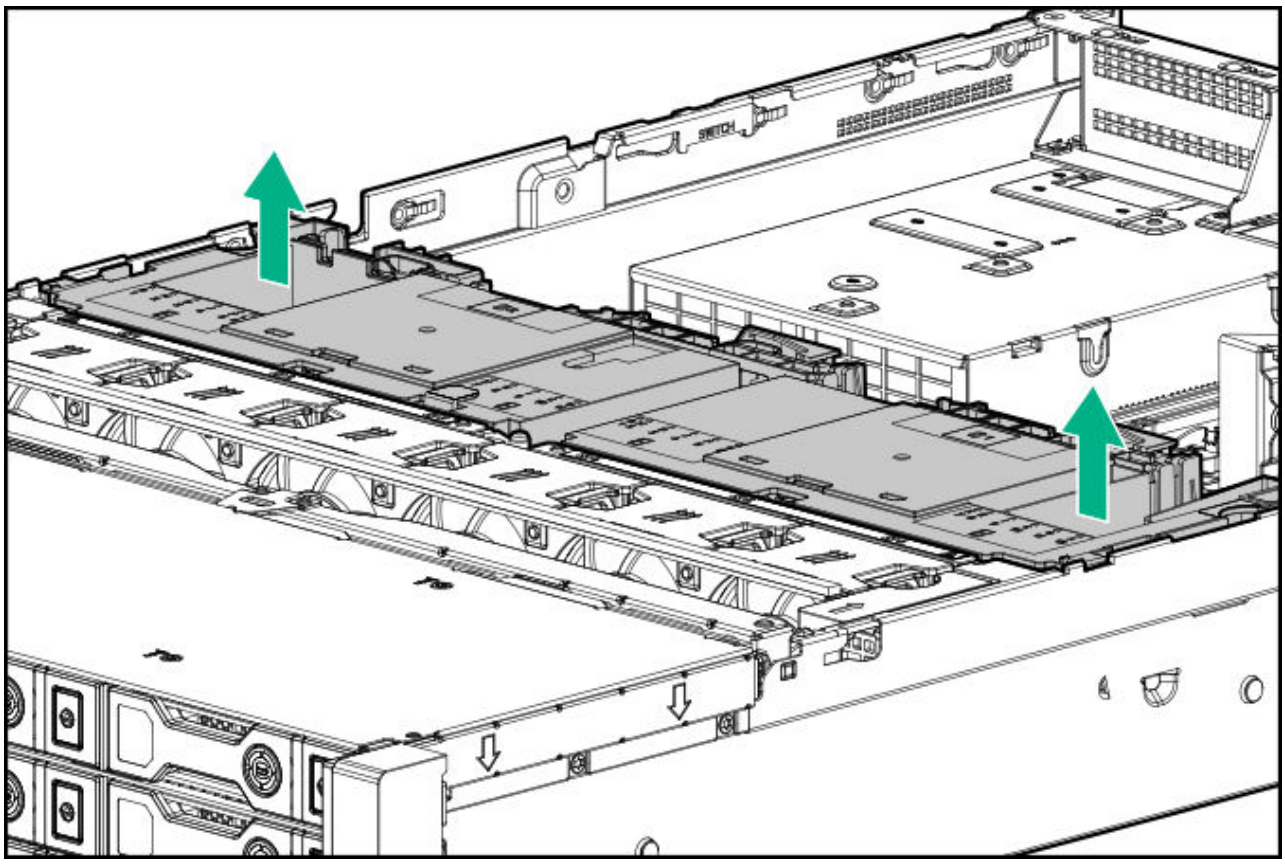

6. Remove all riser cages.

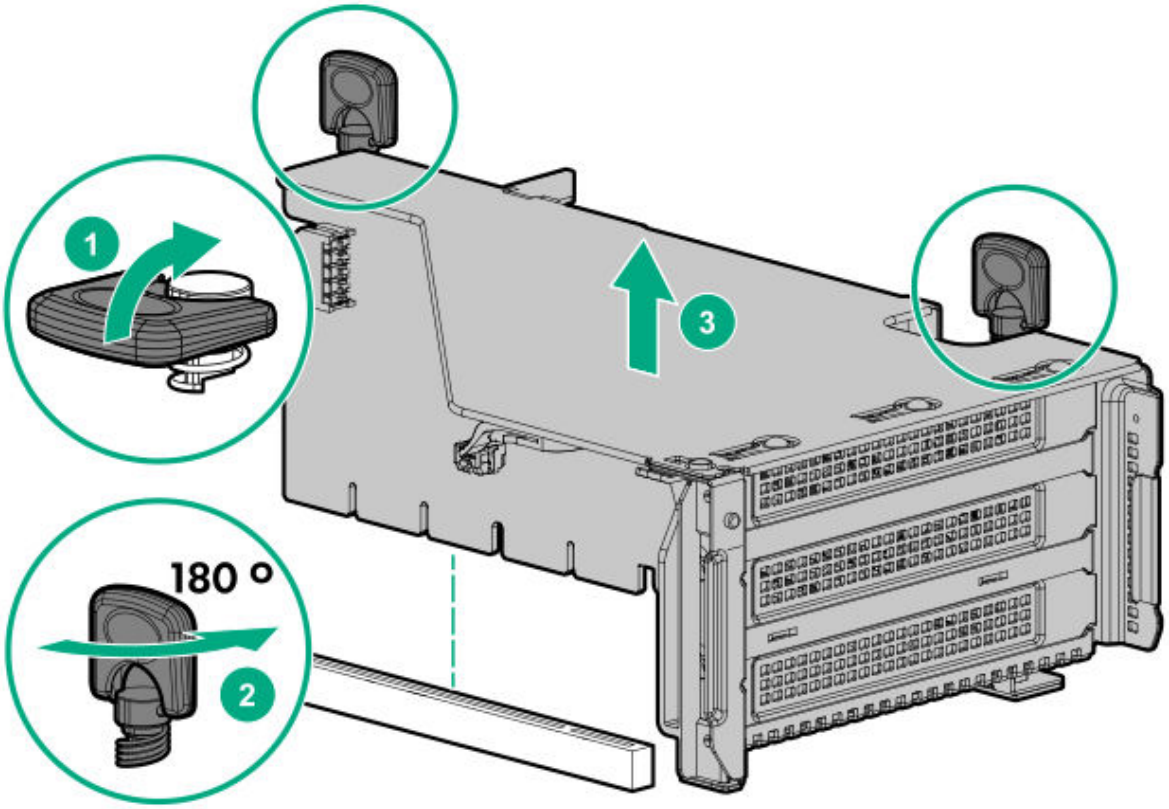
1
3
180 °
2

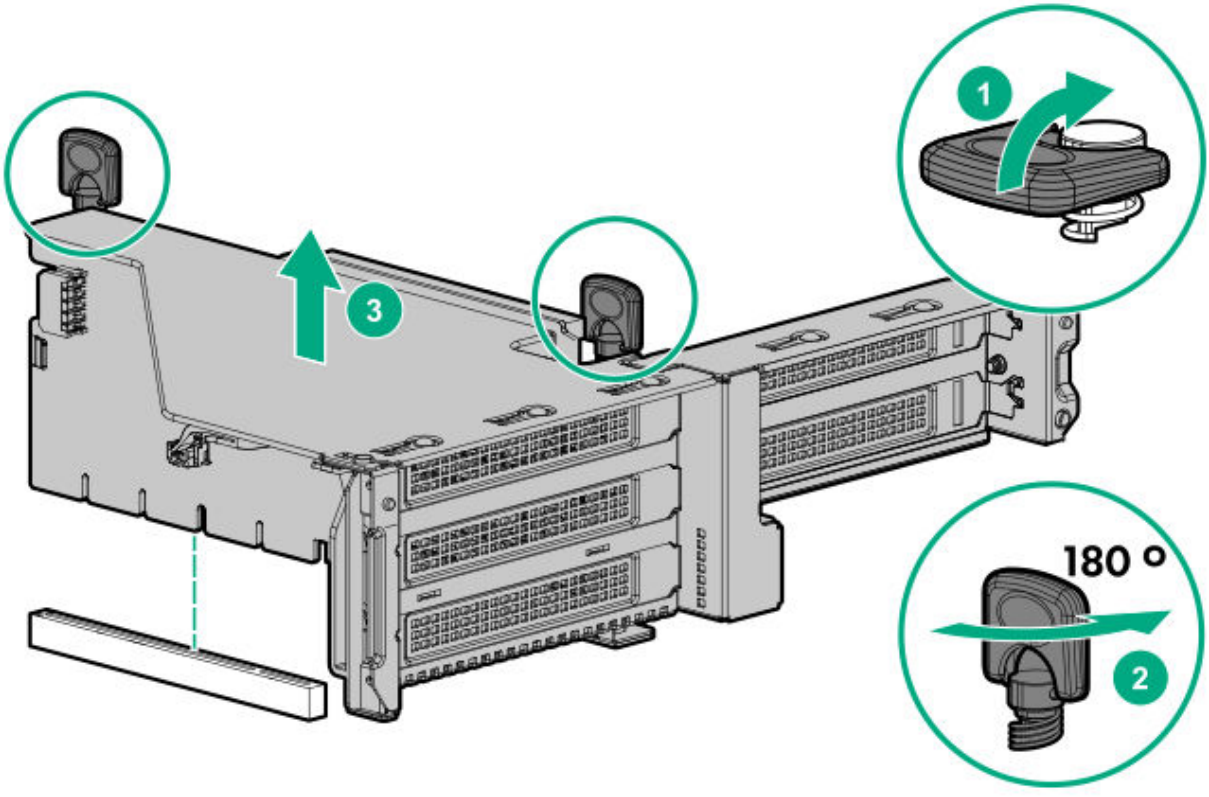
1
3
180 °
2

7. Connect the power cable to the drive backplane power connector on the system board.
8. If connecting the data cable to the system board or a controller, connect the data cable.
9. Prepare the drive cage for installation by lifting the latches on the drive cage.
10. Install the drive cage:

> **CAUTION:** Do not drop the drive cage on the system board. Dropping the drive cage on the system board might damage the system or components. Remove all drives and use two hands when installing or removing the drive cage.

a. Locate the alignment pins on the rear of the drive cage.

b. Align the pin on the rear left of the drive cage to the server and then insert the pin.

c. Gently lower the opposite side of the drive cage.

d. Pull the plunger pin on the rear right of the drive cage and then lower the drive cage until the plunger pin engages.

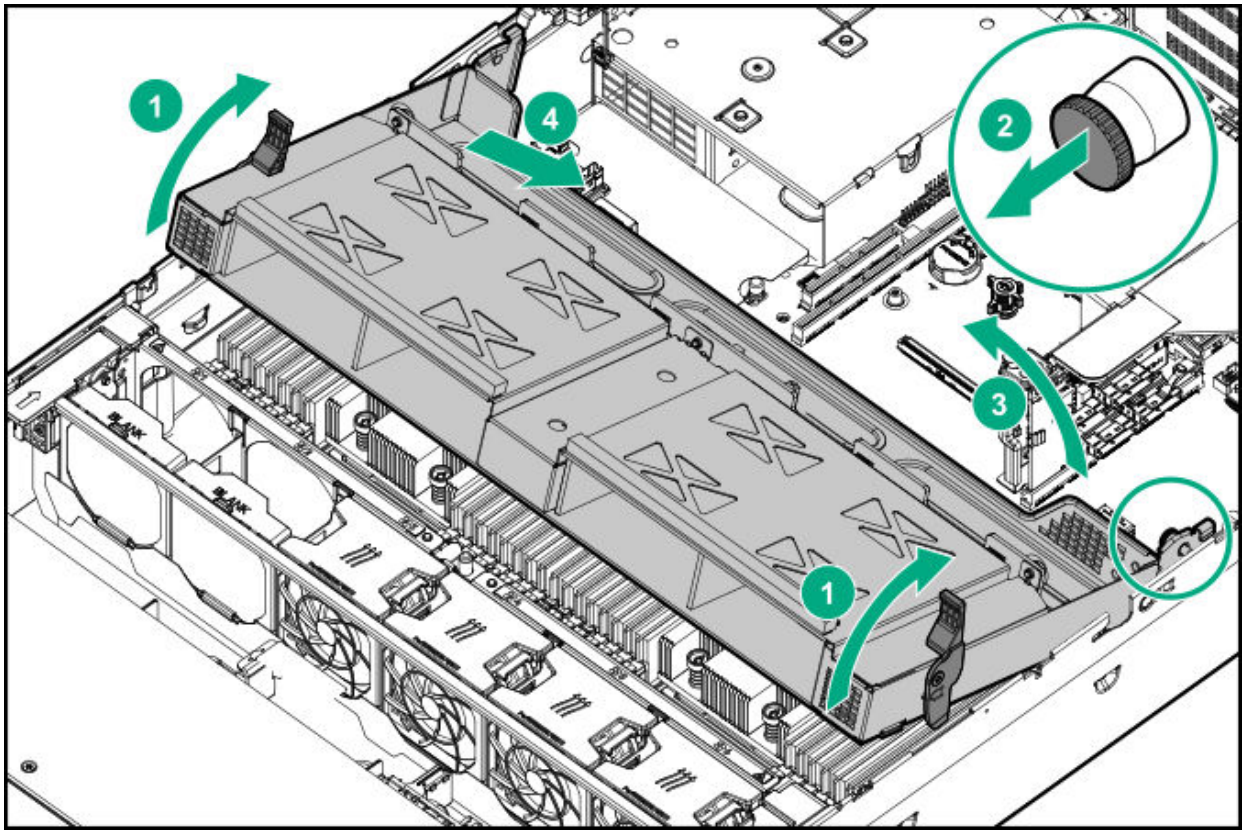

.1. Install drives or drive blanks.

.2. Push down on the latches to lower the drive cage into place.

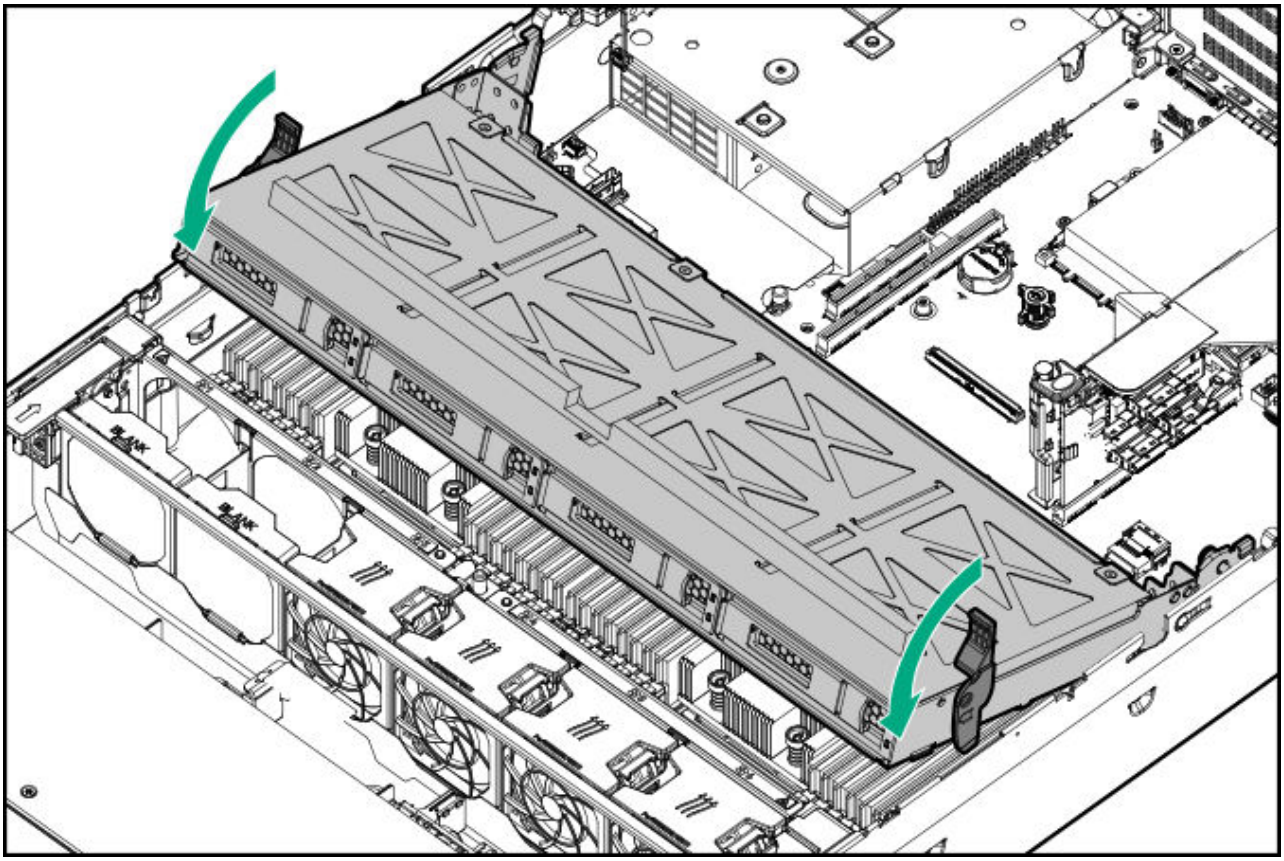

.3. Connect the power and data cables to the drive backplane.

The installation is complete.

Installing a midplane 8 SFF SAS/SATA drive cage

Observe the following:

- A 1U heatsink is required for each processor when installing this option.
- If you have a TPM, install it prior to this option.
- If you have a type-a controller, install it prior to this option.

Prerequisites

Before you perform the procedure, make sure that you have the components included with the hardware option kit available.

Procedure

1. Power down the server.
2. Remove all power:
   a. Disconnect each power cord from the power source.
   b. Disconnect each power cord from the server.
3. Do one of the following:
   - Extend the server from the rack.
   - Remove the server from the rack.
4. Remove the access panel.
5. Remove the air baffle.

   The air baffle is no longer needed. The drive cage acts as an air baffle for the server.

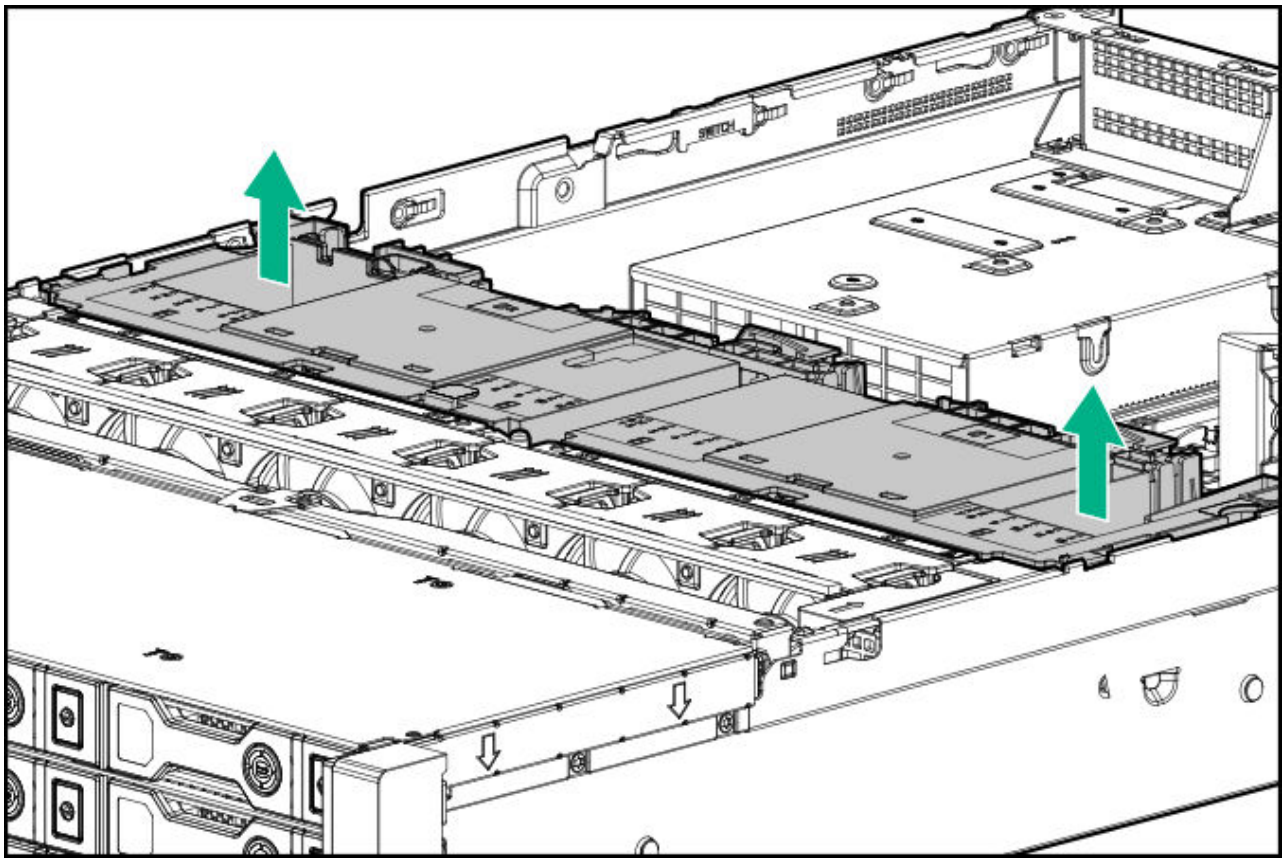

6. Remove all riser cages.

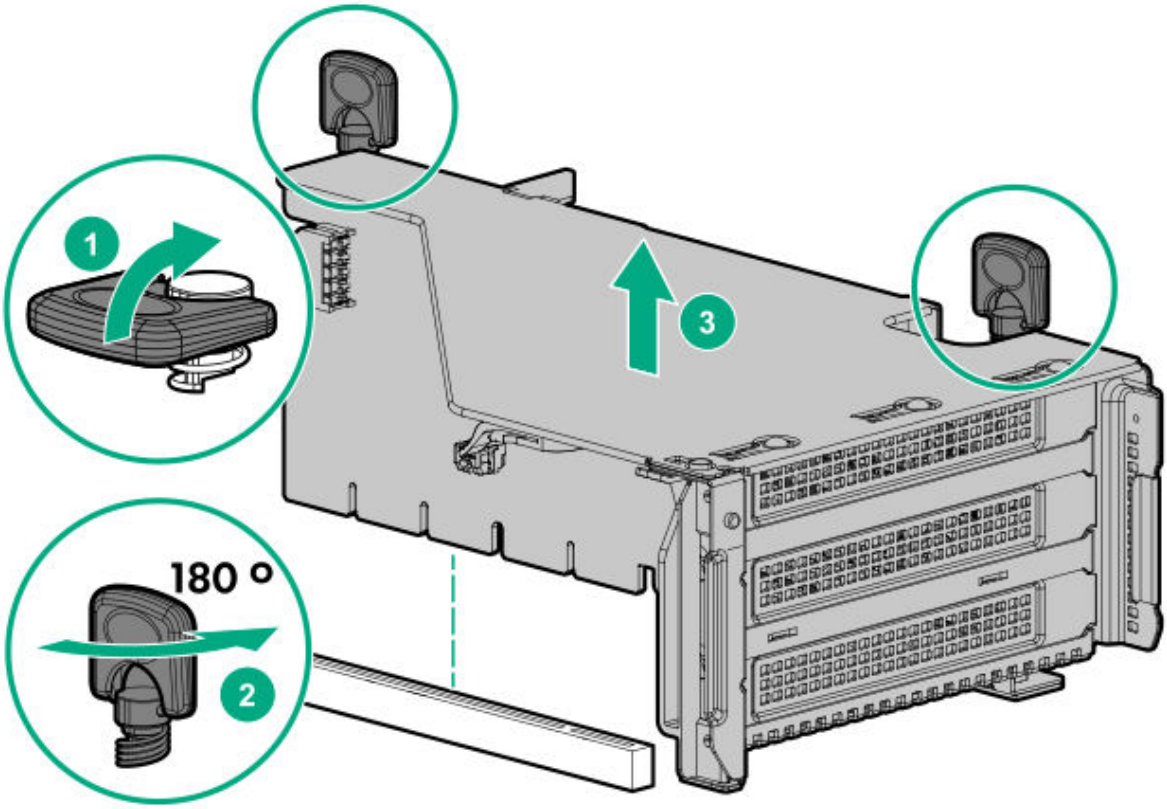

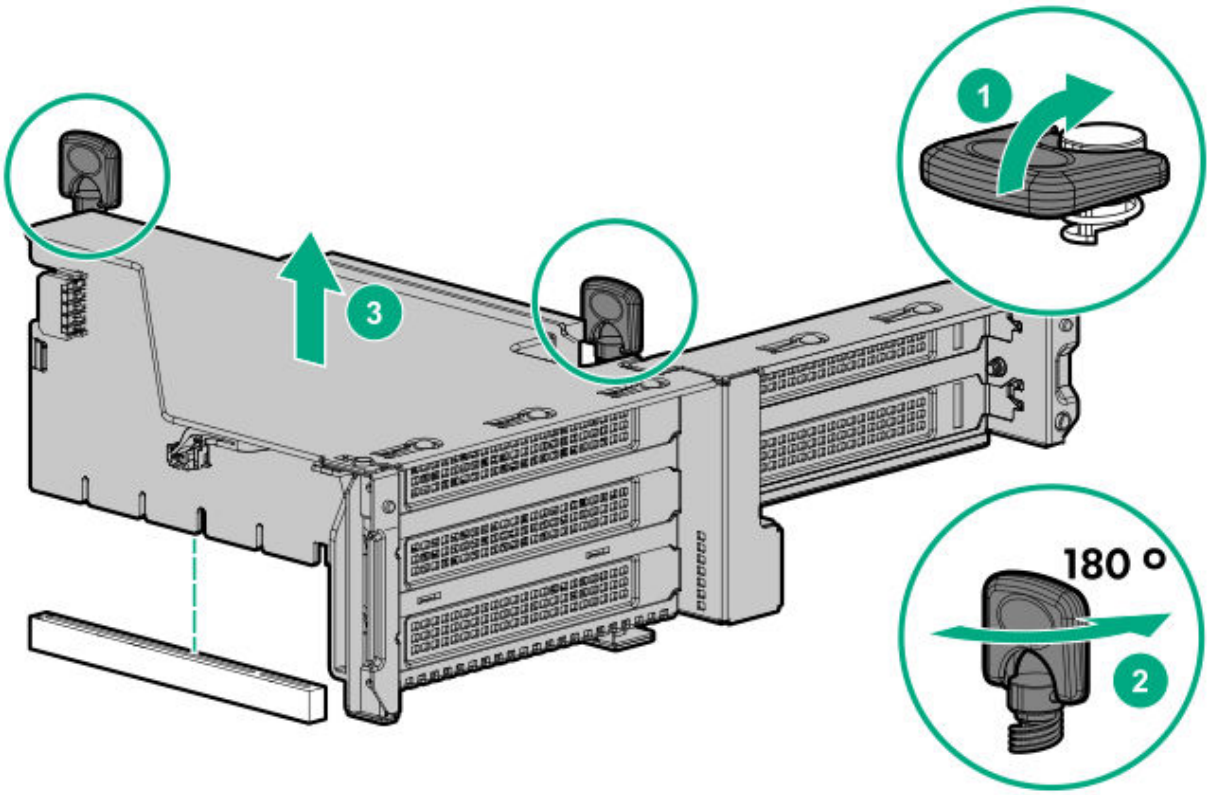

7. Connect the power cable to the drive backplane power connector on the system board.
8. If connecting the data cable to the system board or a controller, connect the data cable.
9. Prepare the drive cage for installation by lifting the latches on the drive cage.
.0. Install the drive cage:

> **CAUTION:** Do not drop the drive cage on the system board. Dropping the drive cage on the system board might damage the system or components. Remove all drives and use two hands when installing or removing the drive cage.

   a. Locate the alignment pins on the rear of the drive cage.
   b. Align the pin on the rear left of the drive cage to the server and then insert the pin.
   c. Gently lower the opposite side of the drive cage.
   d. Pull the plunger pin on the rear right of the drive cage and then lower the drive cage until the plunger pin engages.

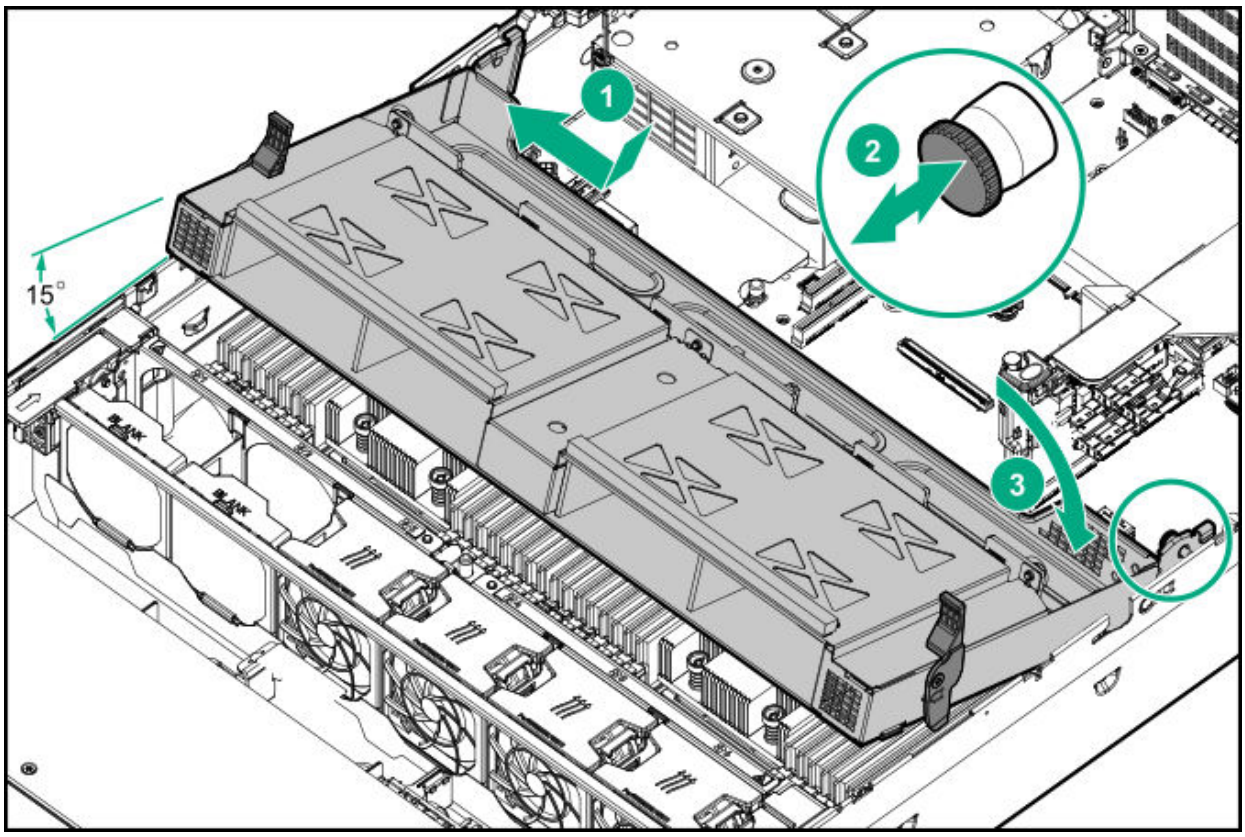

1. Install drives or drive blanks.
2. Push down on the latches to lower the drive cage into place.

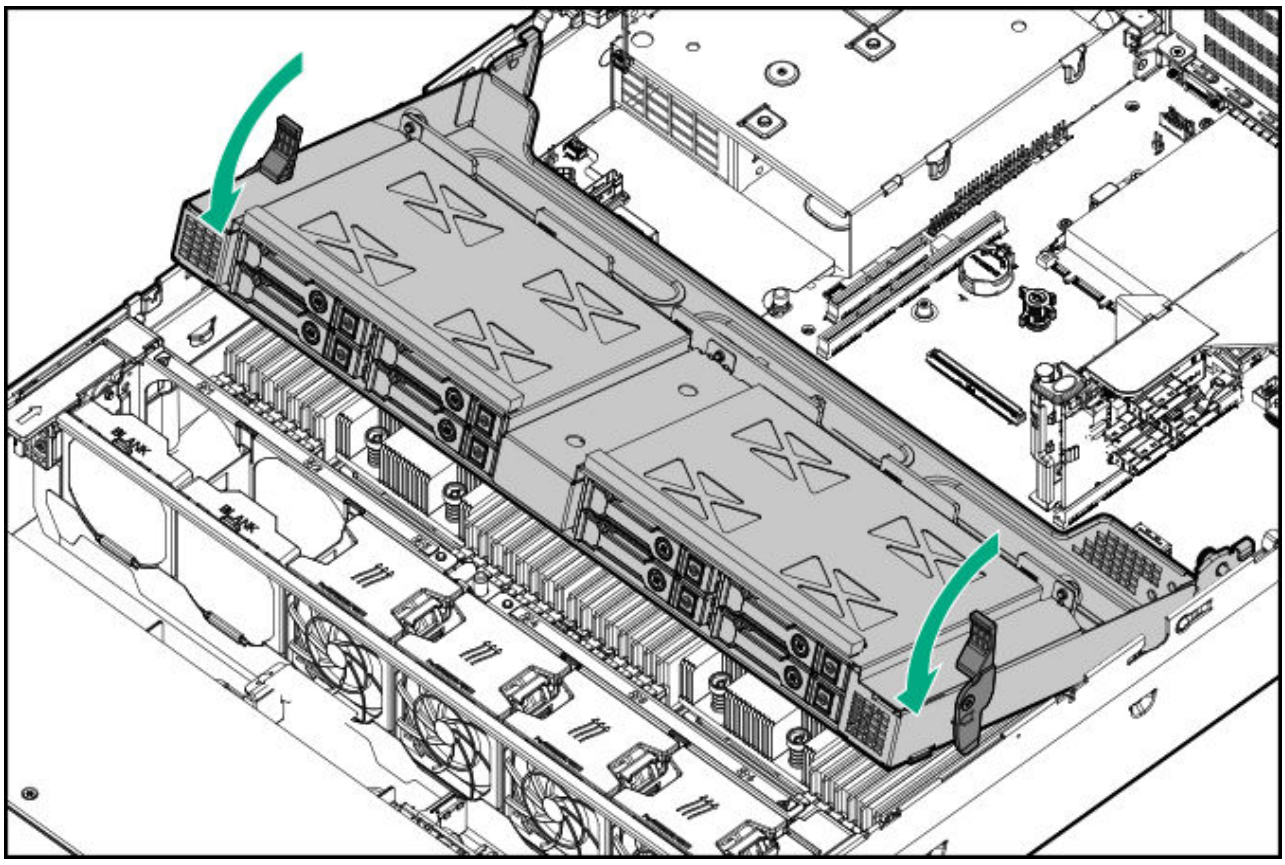

.3. Connect the power and data cables to the drive backplane.

The installation is complete.

Installing a rear 2 SFF SAS/SATA drive cage over the power supplies

Prerequisites

Before you perform this procedure, make sure that you have the following items available:

- T-10 Torx screwdriver
- The components included with the hardware option kit
- The front bays are fully populated with 12 LFF or 24 SFF drives
- High-performance fans are installed in all fan bays

Procedure

1. Power down the server.

2. Remove all power:
    a. Disconnect each power cord from the power source.
    b. Disconnect each power cord from the server.
3. Do one of the following:
    - Extend the server from the rack.
    - Remove the server from the rack.
4. Remove the access panel.
5. Do one of the following:
    - If installed, remove the secondary riser cage.

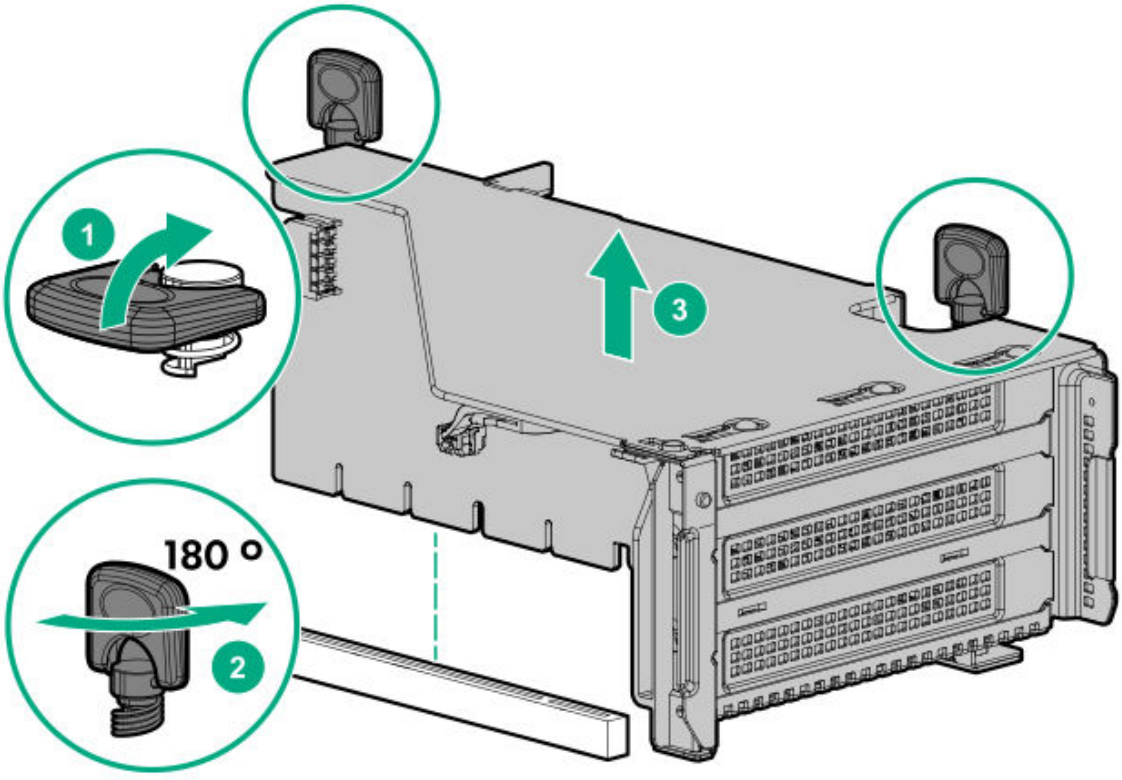

    - Remove the secondary wall blank.

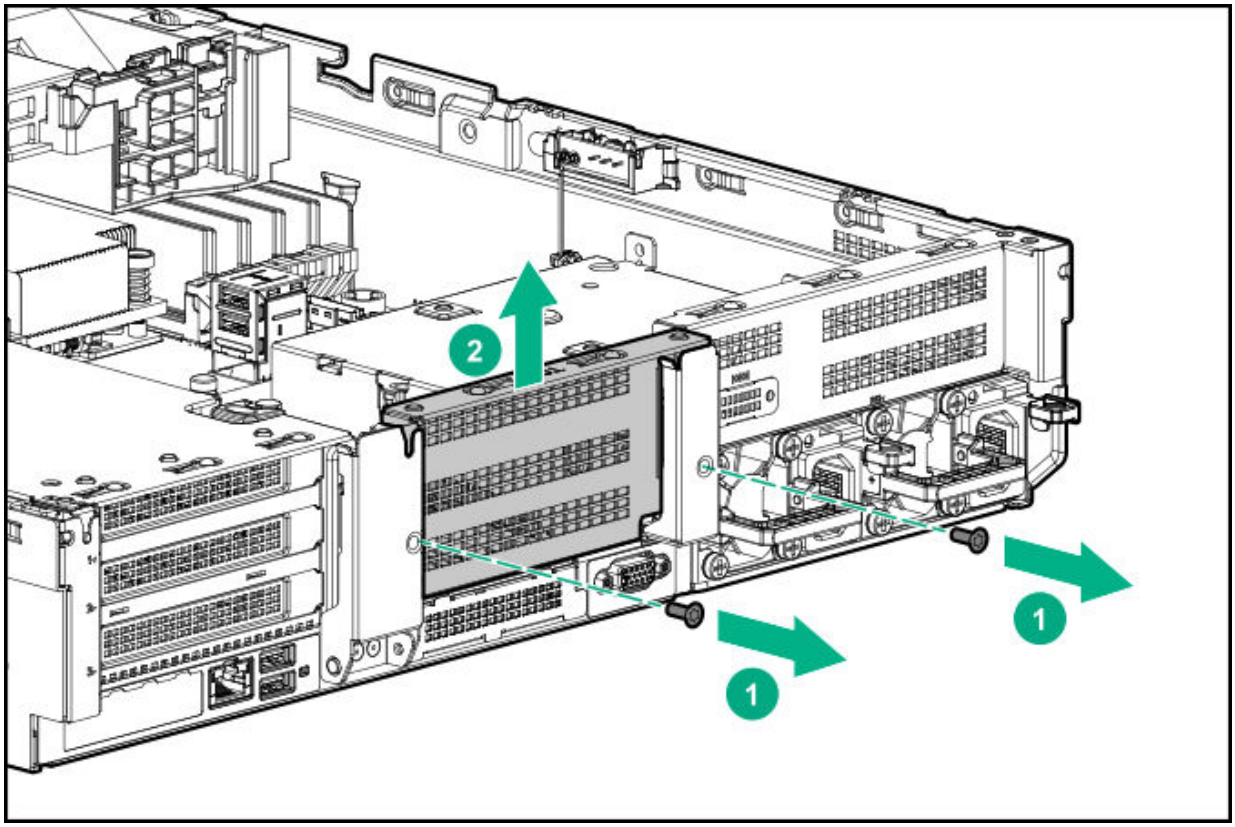

6. Remove the tertiary wall blank.

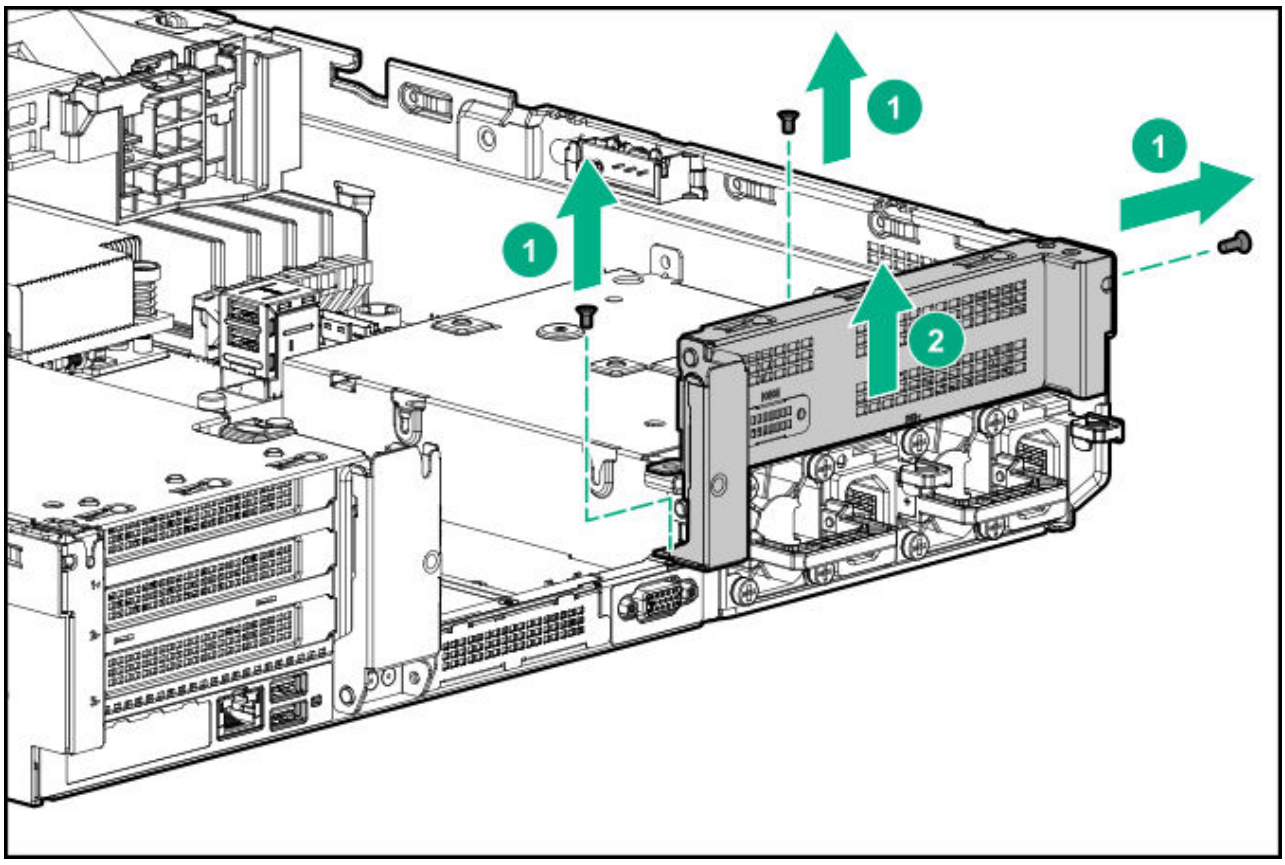

7. Install the drive cage compatible rear wall.

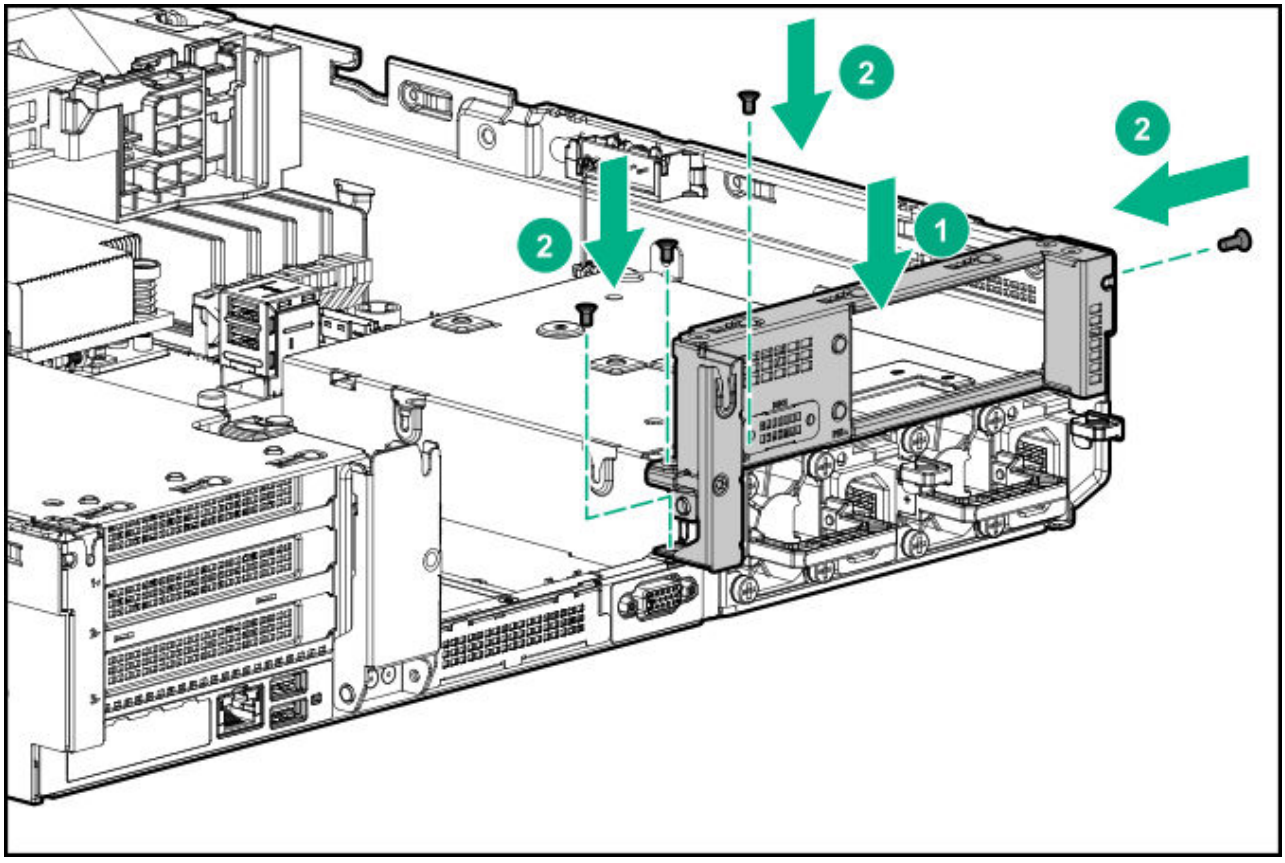

8. Install the drive cage.

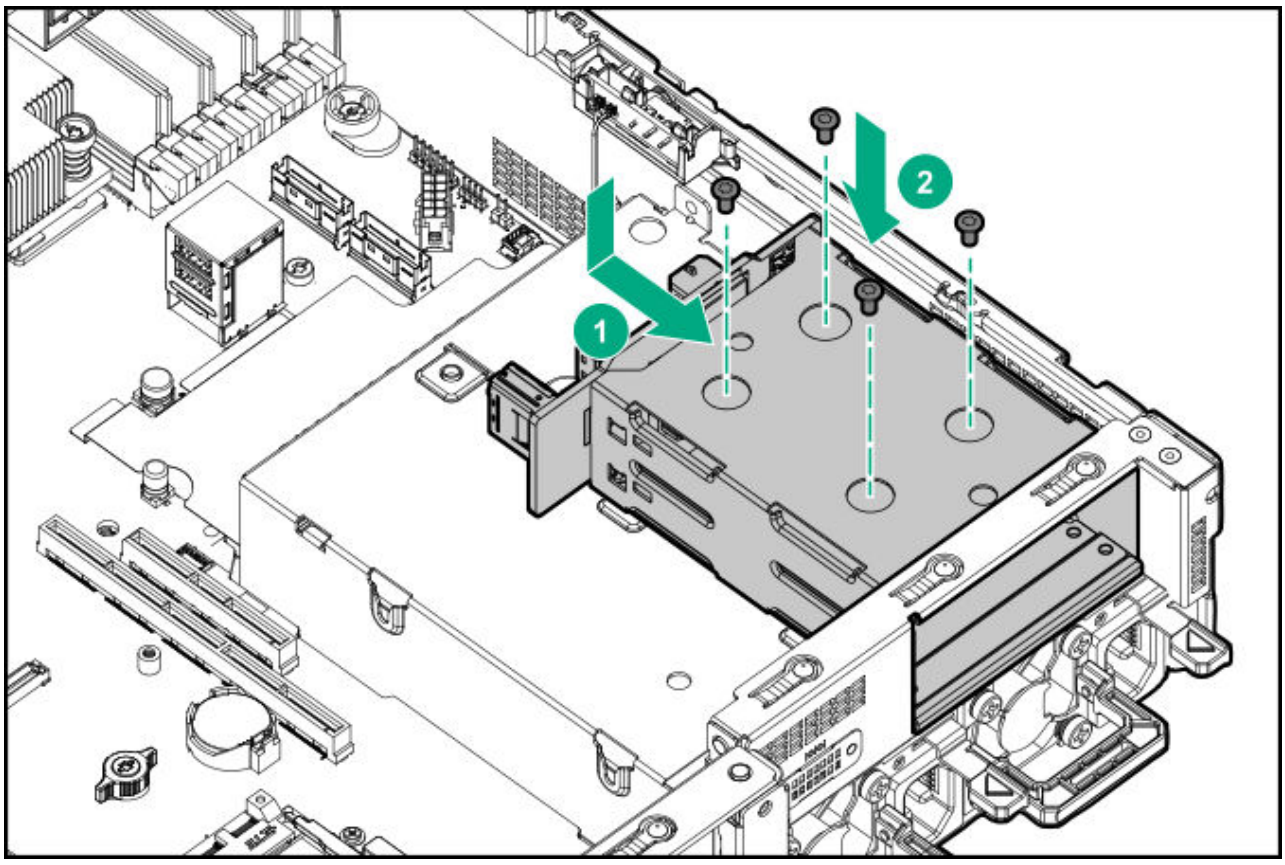

9. Install drives or drive blanks.
10. Install the secondary rear wall or a secondary riser cage.
11. Cable the drive backplane.
12. Install the access panel.
13. Slide the server into the rack.
14. Connect each power cord to the server.
15. Connect each power cord to the power source.
16. Power up the server.

The installation is complete.

Installing a rear 2 SFF SAS/SATA drive cage in the primary or secondary riser

Prerequisites

-

Before you perform this procedure, make sure that you have the following items available:

- T-10 Torx screwdriver
- The components included with the hardware option kit
- The front drive bays are fully populated with 12 LFF or 24 SFF drives.
- High-performance fans are installed in all fan bays.

Procedure

1. Power down the server.
2. Remove all power:
   a. Disconnect each power cord from the power source.
   b. Disconnect each power cord from the server.
3. Do one of the following:
   - Extend the server from the rack.
   - Remove the server from the rack.
4. Remove the access panel.
5. Do one of the following:
   - For primary bays, remove the riser cage.

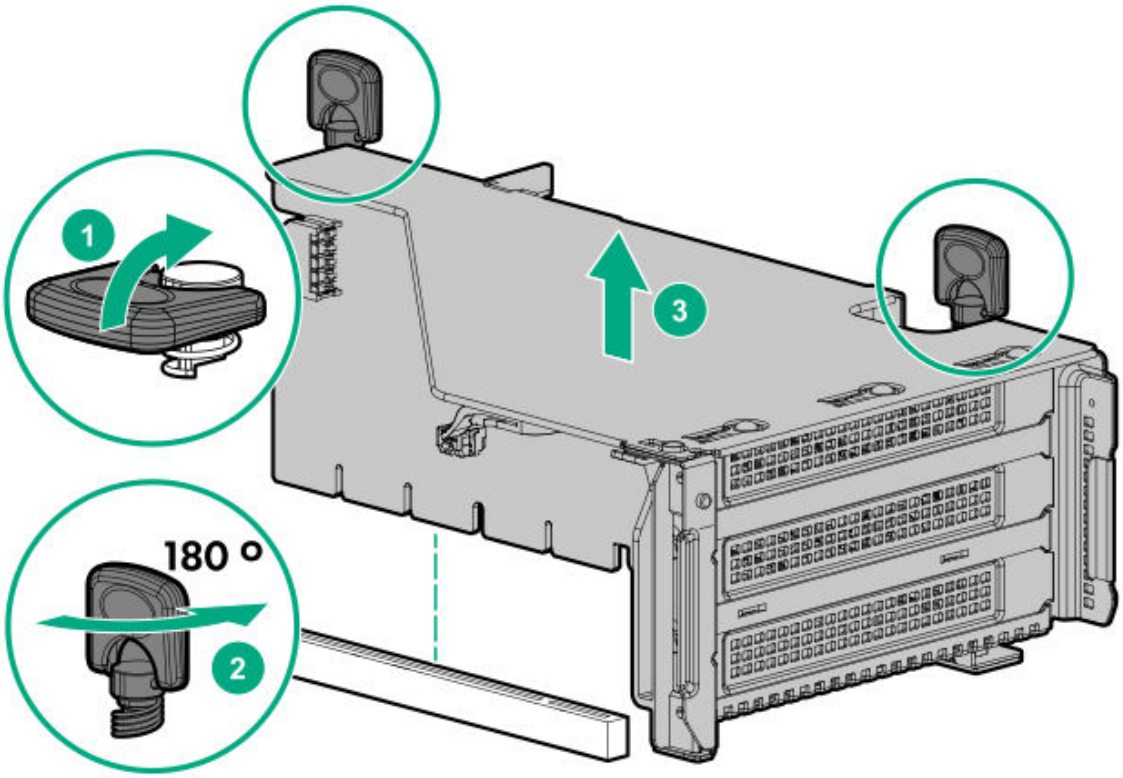

- For secondary bays, remove the rear wall blank.

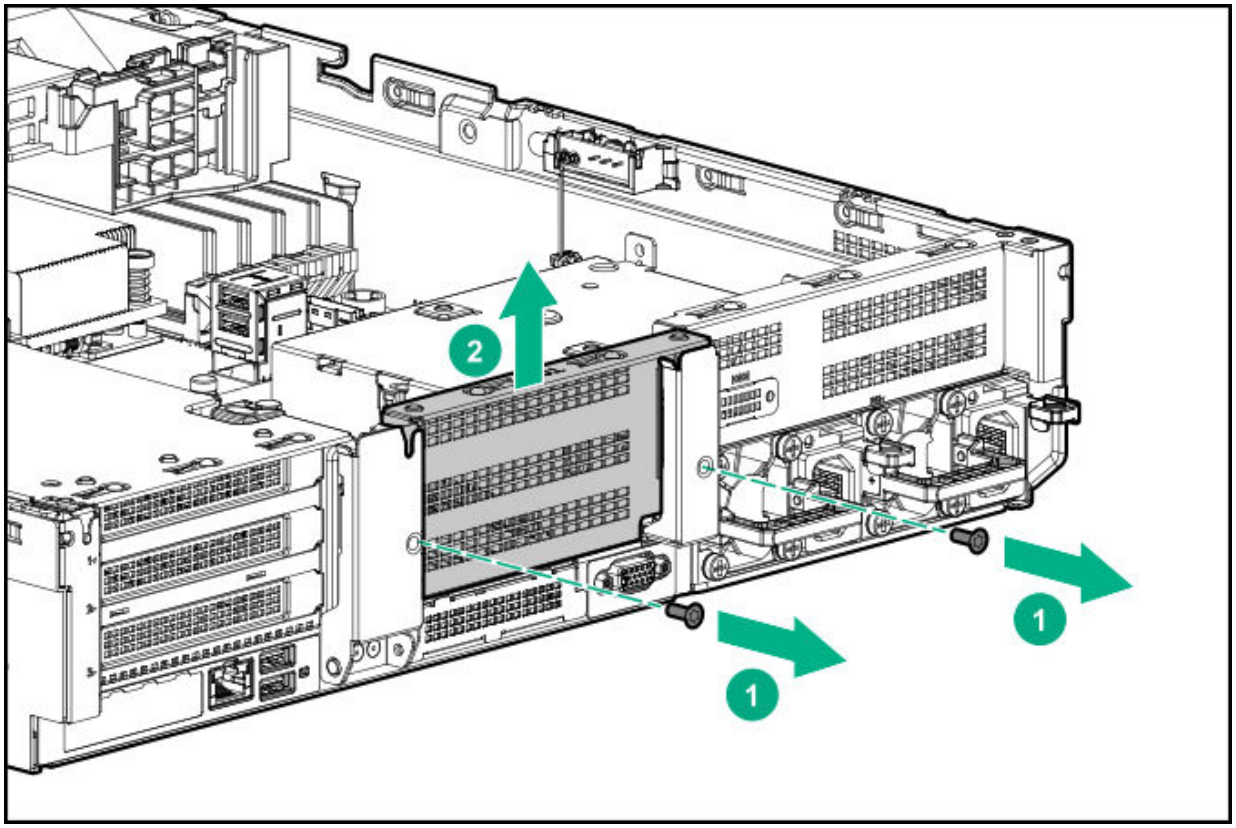

6. Install a SAS expander or other expansion card, if needed.
7. Install the drive cage.

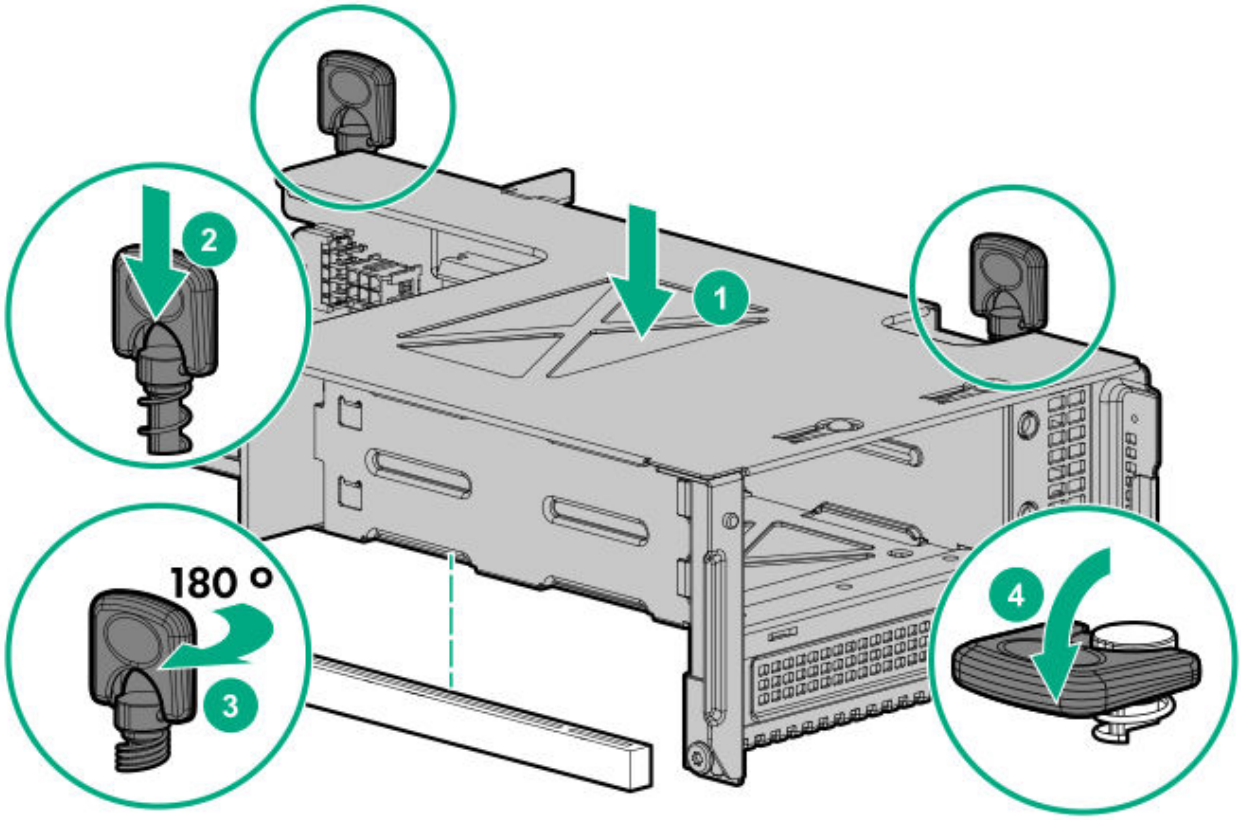

8. Cable the drive backplane.
9. Install drives or drive blanks.
10. Install the access panel.
11. Slide the server into the rack.
12. Connect each power cord to the server.
13. Connect each power cord to the power source.
14. Power up the server.

The installation is complete.

Fan options

CAUTION: To avoid damage to server components, fan blanks must be installed in fan bays 1 and 2 in a single-processor configuration.

CAUTION: To avoid damage to the equipment, do not operate the server for extended periods of time if the server does not have the optimal number of fans installed. Although the server might boot, Hewlett Packard Enterprise does not recommend operating the server without the required fans installed and operating.

Valid fan configurations are listed in the following table.

Fan configuration	Fan bay 1	Fan bay 2	Fan bay 3	Fan bay 4	Fan bay 5	Fan bay 6
1 processor or SFF configura	Fan blank	Fan blank	Fan	Fan	Fan	Fan

Configuration	Fan bay 1	Fan bay 2	Fan bay 3	Fan bay 4	Fan bay 5	Fan bay 6
1 processor with standard fans	Fan	Fan	Fan	Fan	Fan	Fan
1 processor or 8 LFF con						

Configuration	Fan bay 1	Fan bay 2	Fan bay 3	Fan bay 4	Fan bay 5	Fan bay 6
figuration with hstandard fans						
Fan processor 24	Fan	Fan	Fan	Fan	Fan	Fan

Configuration	Fan bay 1	Fan bay 2	Fan bay 3	Fan bay 4	Fan bay 5	Fan bay 6
SFF or 12LFF configuration with max performan						

Configuration	Fan bay 1	Fan bay 2	Fan bay 3	Fan bay 4	Fan bay 5	Fan bay 6
Two processors	Fan	Fan	Fan	Fan	Fan	Fan

For a single-processor configuration, excluding 24 SFF, 8 LFF, or 12 LFF configurations, four fans and two blanks are required in specific fan bays for redundancy. A fan failure or missing fan causes a loss of redundancy. A second fan failure or missing fan causes an orderly shutdown of the server.

For a dual-processor configuration or single-processor 24 SFF , 8 LFF, or 12 LFF configurations, six standard (8 LFF) or max performance (24 SFF, 12 LFF) fans are required for redundancy. A fan failure or missing fan causes a loss of redundancy. A second fan failure or missing fan causes an orderly shutdown of the server.

Max performance fans might be necessary in 24 SFF and 12 LFF configurations for the following installations:

- Optional GPU riser installations
- ASHRAE-compliant configurations
  For more information, see the **Hewlett Packard Enterprise website**.

The server supports variable fan speeds. The fans operate at minimum speed until a temperature change requires a fan speed increase to cool the server. The server shuts down during the following temperature-related scenarios:

- At POST and in the OS, iLO performs an orderly shutdown if a cautionary temperature level is detected. If the server hardware detects a critical temperature level before an orderly shutdown occurs, the server performs an immediate shutdown.
- When the Thermal Shutdown feature is disabled in the BIOS/Platform Configuration (RBSU), iLO does not perform an orderly shutdown when a cautionary temperature level is detected. Disabling this feature does not disable the server hardware from performing an immediate shutdown when a critical temperature level is detected.

CAUTION: A thermal event can damage server components when the Thermal Shutdown feature is disabled in the BIOS/Platform Configuration (RBSU).

Installing high-performance fans

CAUTION:

To prevent damage to the server, ensure that all DIMM latches are closed and locked before installing the fans.

CAUTION:

Do not operate the server for long periods with the access panel open or removed. Operating the server in this manner results in improper airflow and improper cooling that can lead to thermal damage.

Procedure

1. Extend the server from the rack.
2. Remove the access panel.
3. If installed, remove all fan blanks.

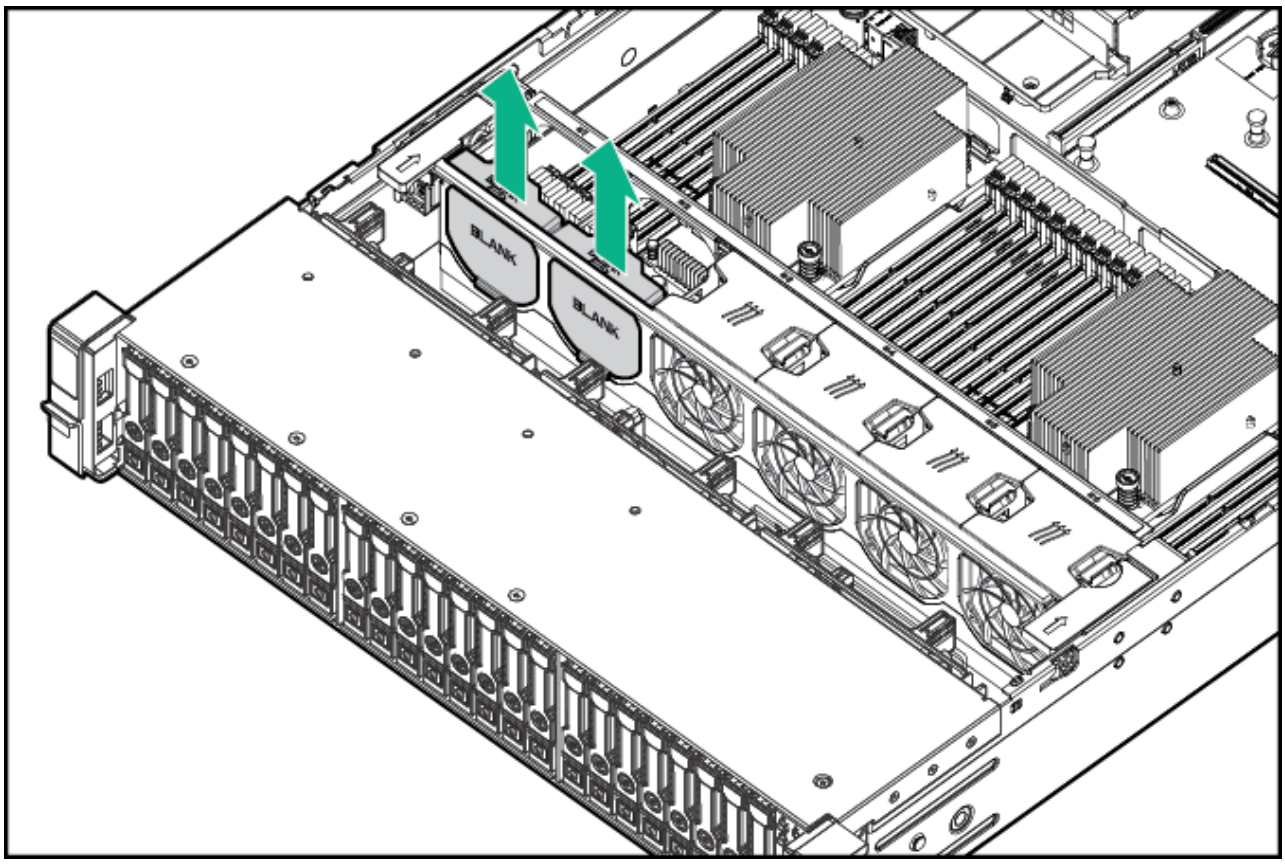

4. Remove the air baffle.
5. Remove all standard fans.

> **IMPORTANT:** Do not mix standard fans and high-performance fans in the same server.

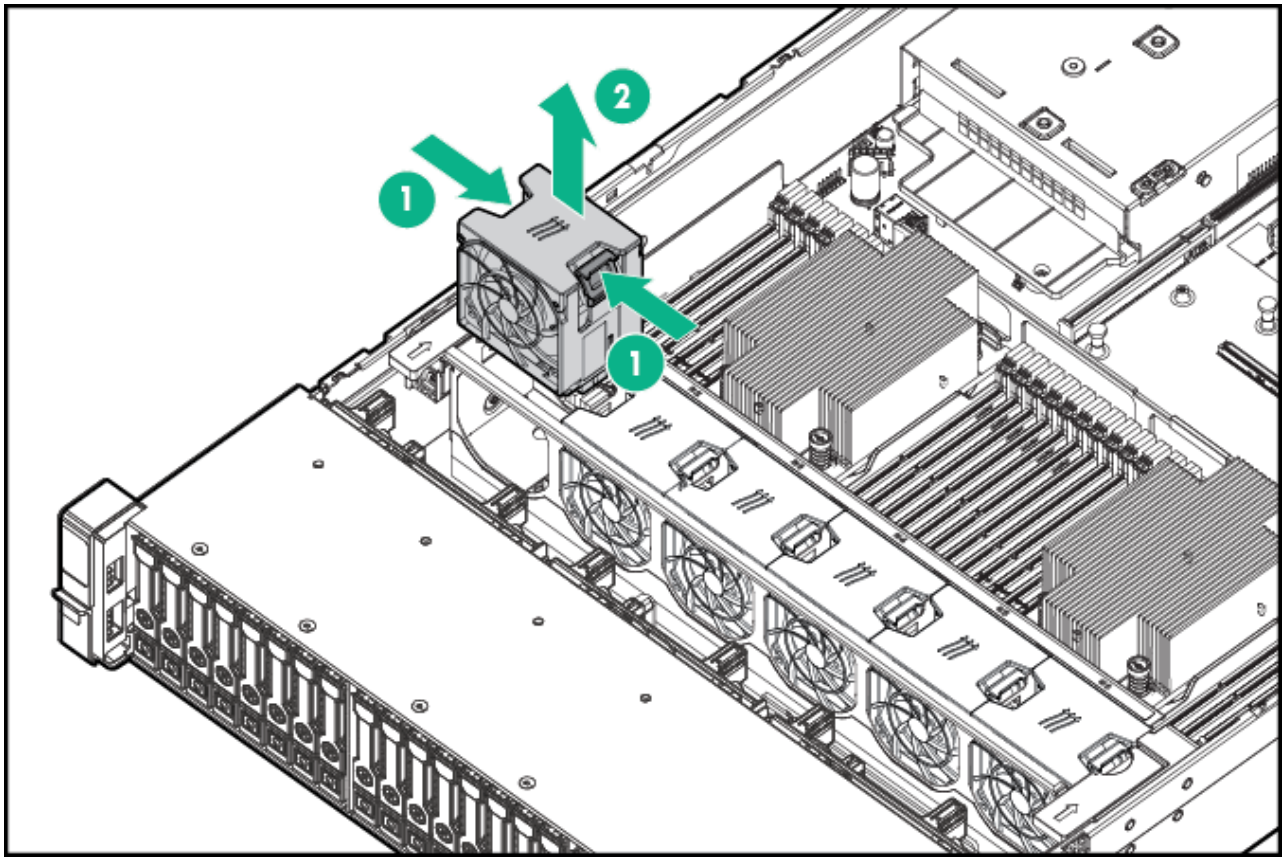

6. Install high-performance fans in all fan bays.

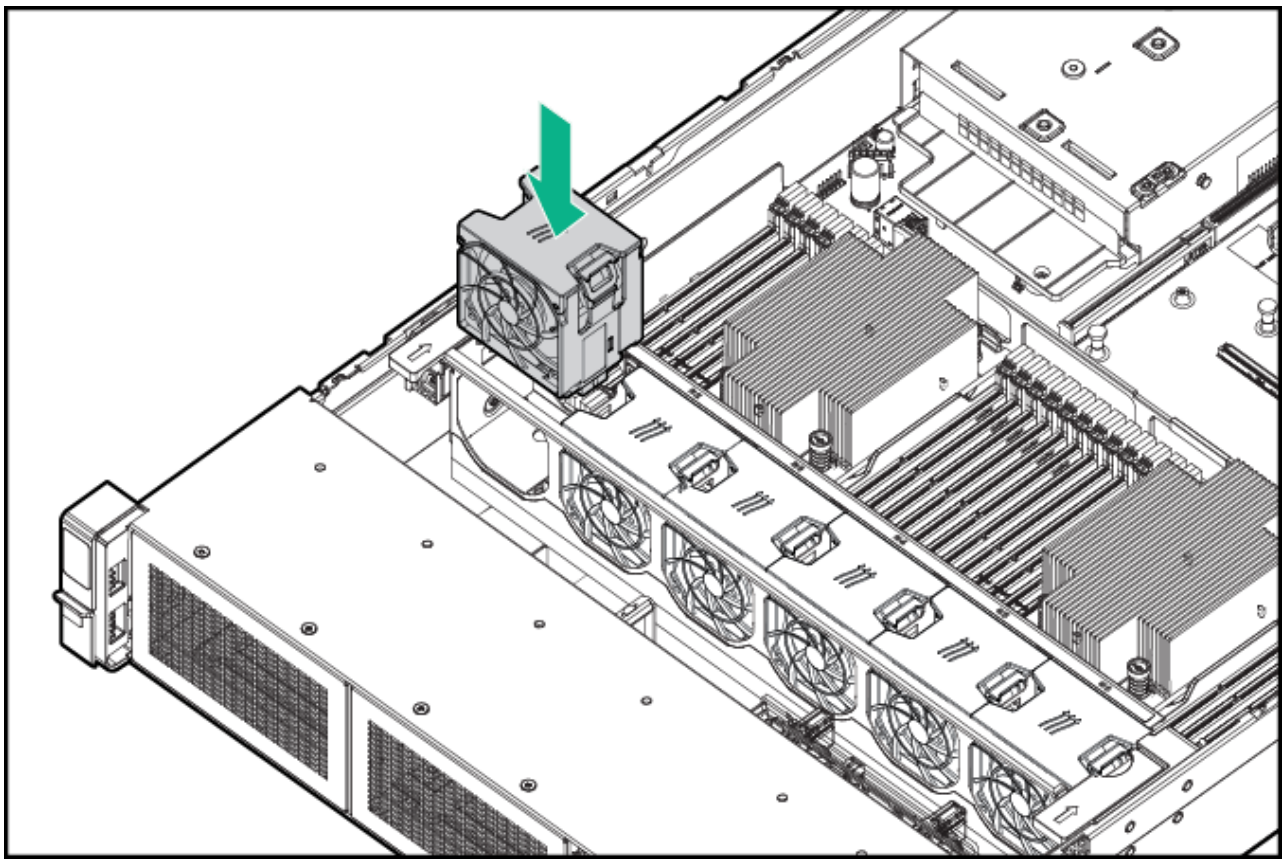

7. Install the air baffle.
8. Install the access panel.
9. Install the server into the rack.

Processor and heatsink options

Installing a processor

Hewlett Packard Enterprise recommends identifying the processor and socket components before performing this procedure.

Prerequisites

Before you perform this procedure, make sure that you have the following items available:

- The components included with the hardware option kit
- T-20 Torx screwdriver
- 1.0 gm (0.5 ml) or two 0.5 gm (0.25 ml) of thermal grease
- Alcohol wipe

Procedure

1. Observe the following alerts:

   CAUTION: To avoid damage to the processor or system board, only authorized personnel should attempt to replace or install the processor in this server.

   CAUTION: To prevent possible server malfunction and damage to the equipment, multiprocessor configurations must contain processors with the same part number.

   CAUTION: If installing a processor with a faster speed, update the system ROM before installing the processor.

   To download firmware and view installation instructions, see the **Hewlett Packard Enterprise Support Center website**.

   CAUTION: THE CONTACTS ARE VERY FRAGILE AND EASILY DAMAGED. To avoid damage to the socket or processor, do not touch the contacts.

2. Power down the server.
3. Remove all power:
   a. Disconnect each power cord from the power source.
   b. Disconnect each power cord from the server.
4. Do one of the following:
   - Extend the server from the rack.
   - Remove the server from the rack.
5. Remove the access panel.
6. Do one of the following:

- Remove the air baffle.
- If installed, remove the 4 LFF midplane drive cage.

7. Remove the heatsink blank.
8. Use a T-20 Torx screwdriver to loosen the three captive screws in the sequence shown in the following image, and then pivot the force frame upward.

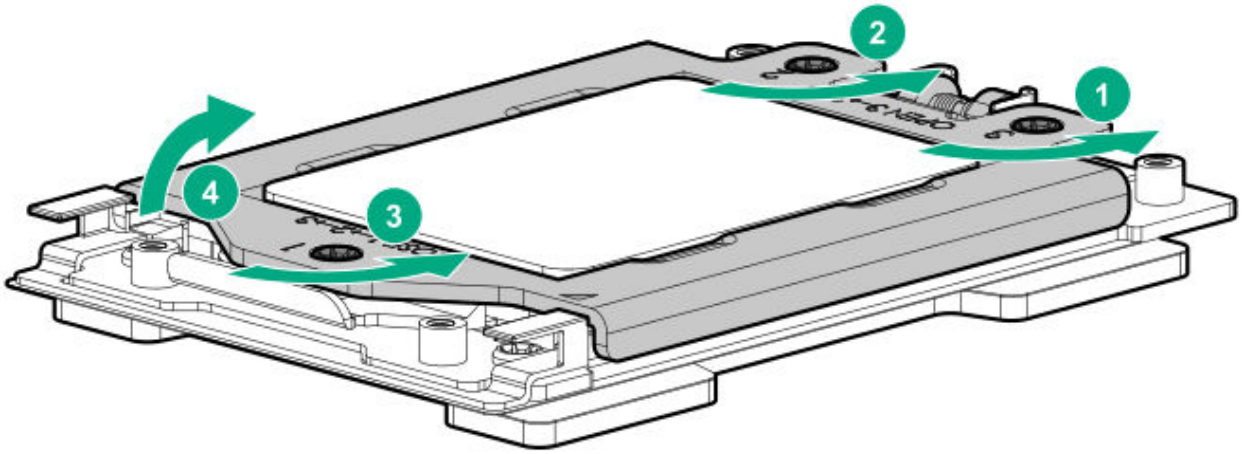

9. Remove the external cap:
   a. Hold the lift tabs near the front end of the rail frame, and then pivot the rail frame to the vertical position.
   b. Slide the external cap out of the rail frame.

      Retain the external cap for future use.

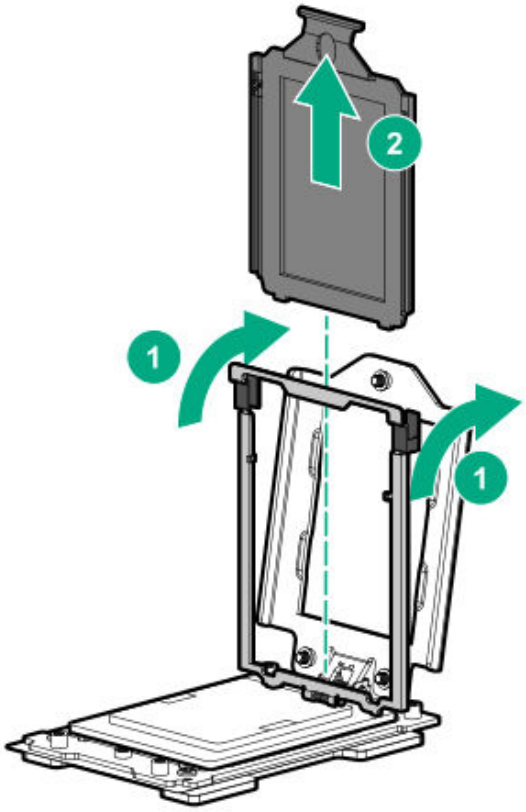

.0. Install the processor:

a. Hold the processor by its carrier handle and slide the processor into the rail frame until it engages with a click sound.

b. Remove the pin field cover cap.

> **CAUTION:**
>
> To prevent the risk of damaging the pins in the processor socket, do not reinstall the pin field cover cap after removing it.

c. Hold the lift tabs near the front end of the rail frame, and then pivot the rail frame to the closed position.

   A click sound indicates that the rail frame is properly engaged.

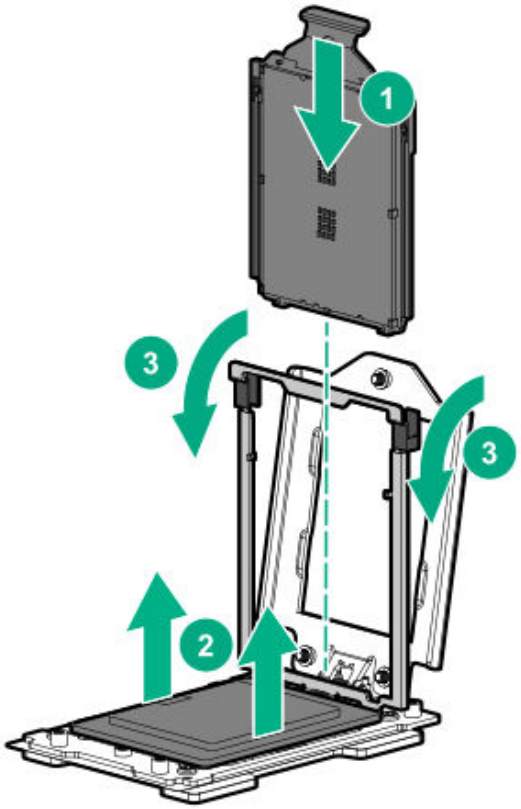

.1. Close the force frame:

> **CAUTION:**
>
> Do not overtighten the screws as this might damage the system board or the processor socket.

a. Pivot the spring loaded force frame downward and hold it down (callout 1).

b. Use a T-20 Torx screwdriver to tighten the captive screws in the sequence shown in the following image (callouts 2–4).

When using a torque wrench to tighten the screws, apply a torque of 1.58 N · m (14 lbf-in).

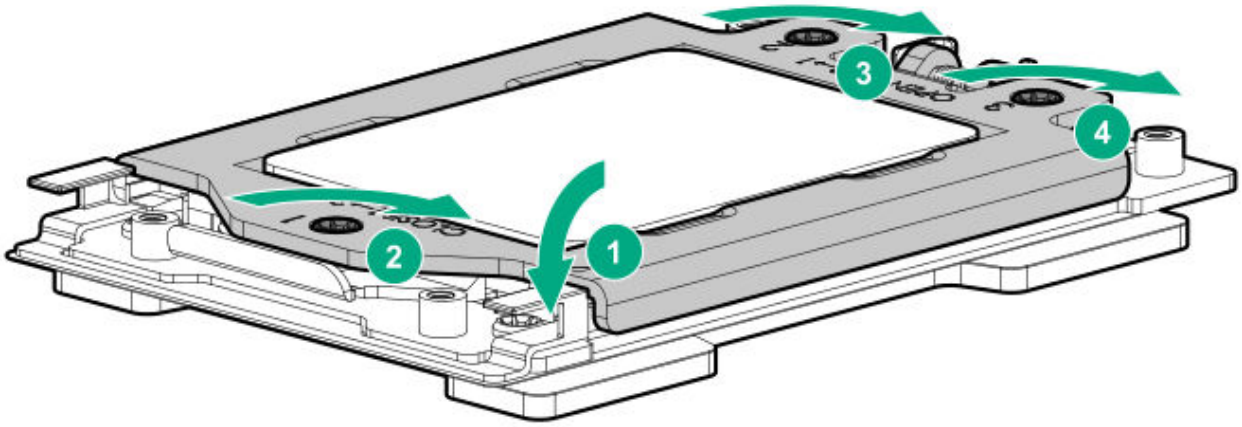

.2. Remove the thermal interface protective cover from the new heatsink.

.3. Install the heatsink:

CAUTION:

To prevent mechanical damage or depositing oil on your hands or other contaminant to the heatsink contact surface, hold the heatsink only by the edge of its base plate. Do not touch the heatsink fins.

CAUTION:

To prevent thermal failure or component damage, do not move the heatsink once the bottom of its base plate touches the top of the processor. Excessive heatsink movement can cause the thermal grease to smear and become uneven. Voids in the compound can adversely impact the transfer of heat away from the processor.

CAUTION:

Heatsink screws must be tightened and loosened in alternating sequence. Do not overtighten the screws as this might damage the system board or the processor socket.

a. Position the heatsink on top of the processor, ensuring that it is properly seated before securing the screws.

b. Use a T-20 Torx screwdriver to tighten the captive screws in the sequence specified on the heatsink label.

   When using a torque wrench to tighten the screws, apply a torque of 1.58 N-m (14 lbf-in).

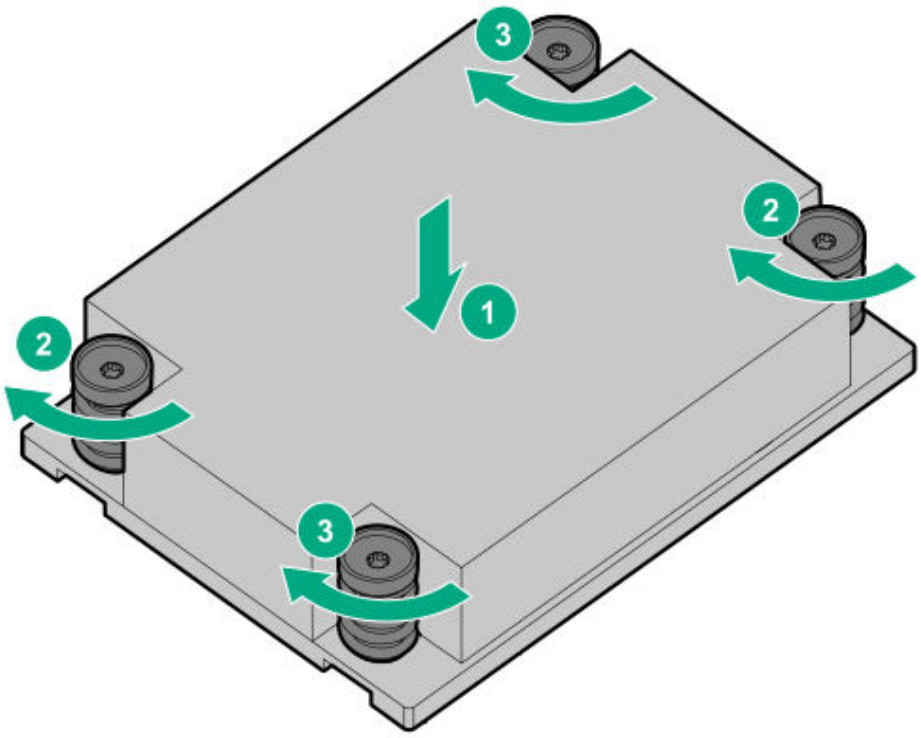

.4. Do one of the following:

- Install the air baffle.
- Install the midplane 4 LFF SAS/SATA drive cage.

.5. Install the access panel.

.6. Install the server into the rack.

.7. Connect each power cord to the server.

.8. Connect each power cord to the power source.

.9. Power up the server.

The installation is complete.

Installing a 1U or high-performance heatsink

This procedure shows a standard heatsink as an example. The installation process is the same for both the standard and high-performance heatsinks.

Hewlett Packard Enterprise recommends identifying the processor and socket components before performing this procedure.

Prerequisites

Before you perform this procedure, make sure that you have the following items available:

- The components included with the hardware option kit
- T-20 Torx screwdriver
- 1.0 gm (0.5 ml) or two 0.5 gm (0.25 ml) of thermal grease
- Alcohol wipe

Procedure

1. Power down the server.
2. Remove all power:
   a. Disconnect each power cord from the power source.
   b. Disconnect each power cord from the server.
3. Do one of the following:
   - Extend the server from the rack.
   - Remove the server from the rack.
4. Remove the access panel.
5. Do one of the following:
   - Remove the air baffle.
   - If installed, remove the 4LFF midplane drive cage.
6. Allow the existing heatsink to cool.
7. Remove the heatsink:

CAUTION:

To prevent mechanical damage or depositing oil on your hands or other contaminant to the heatsink contact surface, hold the heatsink only by the edge of its base plate. Do not touch the heatsink fins.

CAUTION:

Heatsink screws must be tightened and loosened in alternating sequence. Do not overtighten the screws as this might damage the system board or the processor socket.

a. Use a T-20 Torx screwdriver to loosen the captive screws in the sequence specified on the heatsink label.

b. Lift the heatsink away from the system board.

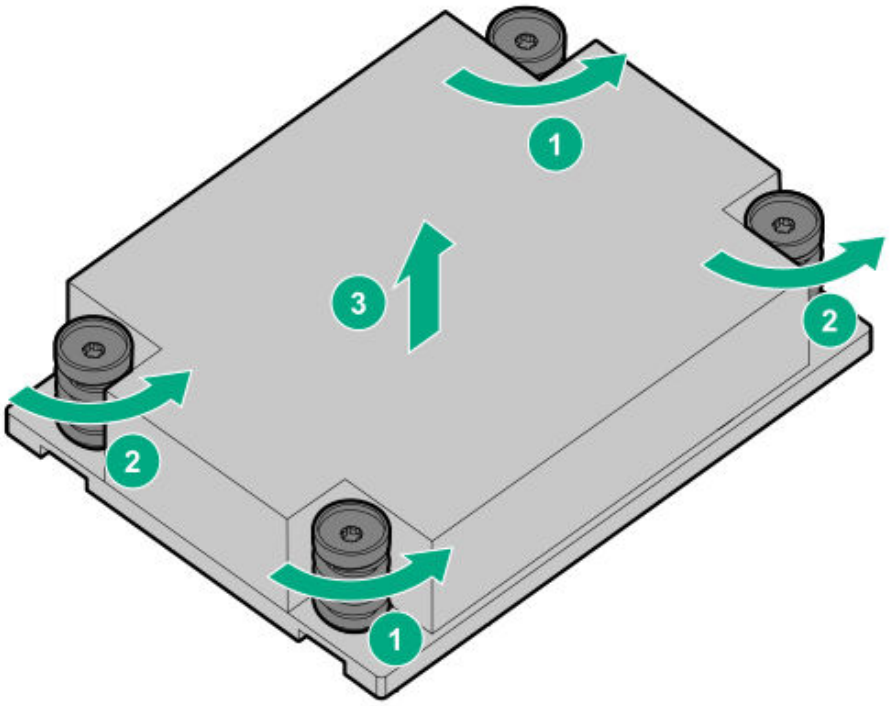

c. Place the heatsink on a flat work surface with its contact side facing upward.

8. Use an alcohol wipe to remove the existing thermal grease from the processor.

   Allow the alcohol to evaporate before continuing.

9. Remove the thermal interface protective cover from the new heatsink.

.0. Install the heatsink:

> **CAUTION:**
>
> To prevent mechanical damage or depositing oil on your hands or other contaminant to the heatsink contact surface, hold the heatsink only by the edge of its base plate. Do not touch the heatsink fins.

> **CAUTION:**
>
> To prevent thermal failure or component damage, do not move the heatsink once the bottom of its base plate touches the top of the processor. Excessive heatsink movement can cause the thermal grease to smear and become uneven. Voids in the compound can adversely impact the transfer of heat away from the processor.

> **CAUTION:**
>
> Heatsink screws must be tightened and loosened in alternating sequence. Do not overtighten the screws as this might damage the system board or the processor socket.

a. Position the heatsink on top of the processor, ensuring that it is properly seated before securing the screws.

b. Use a T-20 Torx screwdriver to tighten the captive screws in the sequence specified on the heatsink label.

   When using a torque wrench to tighten the screws, apply a torque of 1.58 N-m (14 lbf-in).

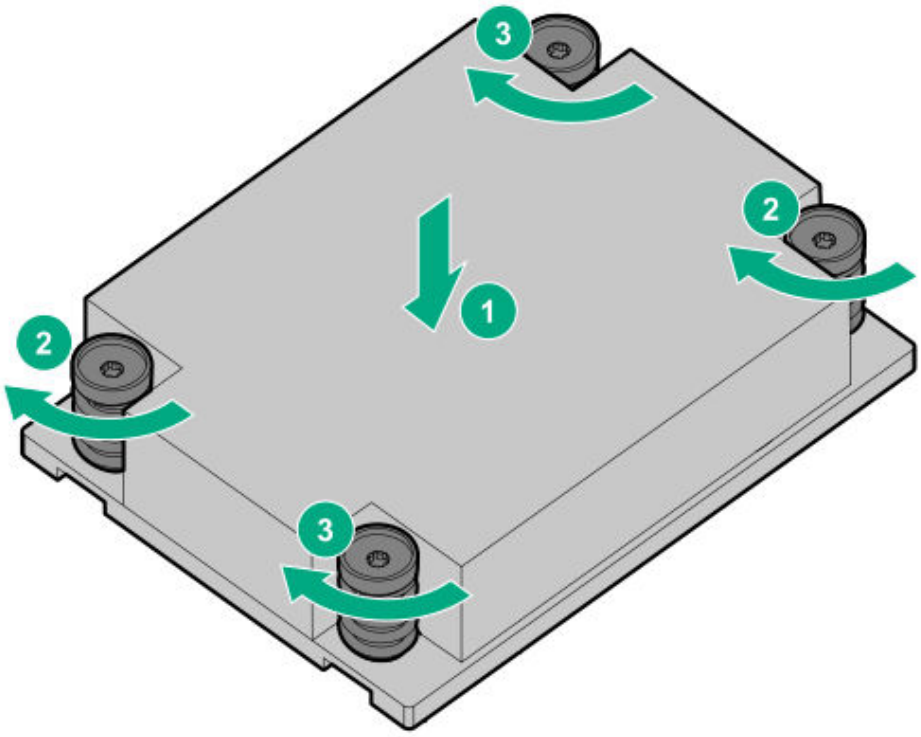

.1. Do one of the following:

- Install the air baffle.
- Perform steps 9–13 of "Installing a midplane 4 LFF SAS/SATA drive cage".

.2. Install the access panel.

.3. Install the server into the rack.

.4. Connect each power cord to the server.

.5. Connect each power cord to the power source.

.6. Power up the server.

The installation is complete.

Memory options

IMPORTANT: This server does not support mixing LRDIMMs and RDIMMs. Attempting to mix any combination of these DIMMs can cause the server to halt during BIOS initialization. All memory installed in the server must be of the same type.

DIMM-processor compatibility

The installed processor determines the type of DIMM that is supported in the server:

AMD EPYC processors support DDR4-3200 DIMMS.

Mixing DIMM types is not supported. Install only the supported DDR4-3200 DIMMs in the server.

DIMM population information

For specific DIMM population information, see the DIMM population guidelines on the Hewlett Packard Enterprise website (**https://www.hpe.com/docs/amd-population-rules-Gen10Plus**).

Memory speed tables

For specific DDR4 server memory speeds, for HPE servers using AMD processors, see the Hewlett Packard Enterprise website (**https://www.hpe.com/docs/amd-speed-table-Gen10Plus**).

Installing a DIMM

The server has 32 DIMM slots.

Prerequisites

Before installing this option, be sure you have the components included with the hardware option kit.

Procedure

1. Power down the server.

2. Remove all power:
    a. Disconnect each power cord from the power source.
    b. Disconnect each power cord from the server.
3. Do one of the following:
    - Extend the server from the rack.
    - Remove the server from the rack.
4. Remove the access panel.
5. Do one of the following:
    - Remove the air baffle.
    - If installed, remove the 4 LFF midplane drive cage.
6. Install the DIMM:
    a. Open the DIMM slot latches.
    b. Align the notch on the bottom edge of the DIMM with the keyed surface of the DIMM slot, and then fully press the DIMM into the slot until the latches snap back into place.

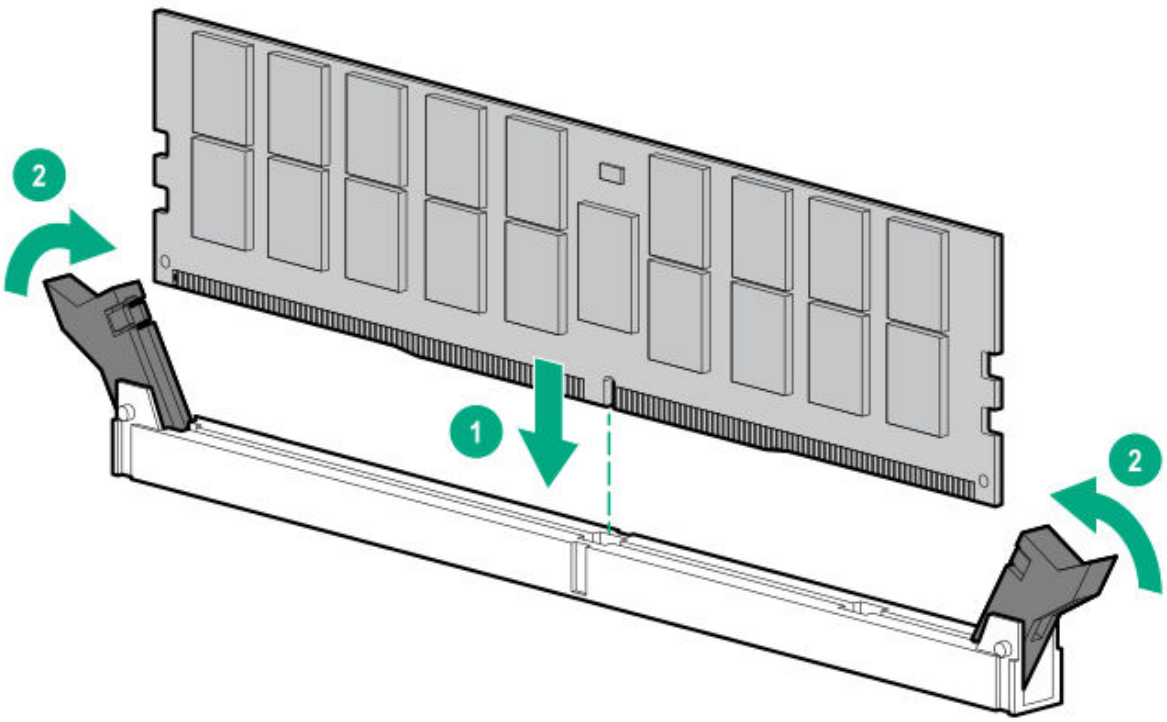

The DIMM slots are structured to ensure proper installation. If you try to insert a DIMM but it does not fit easily into the slot, you might have positioned it incorrectly. Reverse the orientation of the DIMM and insert it again.

7. Do one of the following:
   - Install the air baffle.
   - Install the midplane 4 LFF SAS/SATA drive cage.
8. Install the access panel.
9. Install the server into the rack.
10. Connect each power cord to the server.
11. Connect each power cord to the power source.
12. Power up the server.

Use the BIOS/Platform Configuration (RBSU) in the UEFI System Utilities to configure the memory mode.

For more information about LEDs and troubleshooting failed DIMMs, see "Systems Insight Display combined LED descriptions".

Storage controller options

The server supports the following storage controllers:

- Embedded controllers
  Enabled through UEFI System Utilities and configured using either System Utilities or the HPE Smart Storage Administrator (Intelligent Provisioning).
- Type-a controllers
  Type-a controllers install in the type-a storage controller slot.
- Type-p controllers
  Type-p controllers install in a PCIe expansion slot.

For a complete list of supported storage controller models, see the server QuickSpecs on the Hewlett Packard Enterprise website (**https://www.hpe.com/info/qs**).

Installing a storage controller

Prerequisites

Before you perform this procedure, make sure that you have the components included with the hardware option kit.

Procedure

1. Power down the server.
2. Remove all power:
   a. Disconnect each power cord from the power source.
   b. Disconnect each power cord from the server.
3. Do one of the following:
   - Extend the server from the rack.
   - Remove the server from the rack.
4. Remove the access panel.
5. Do one of the following:
   - Remove the air baffle.
   - If installed, remove the 4 LFF midplane drive cage.
6. Do one of the following:
   - For Type-a Smart Array controllers, install the controller into the Smart Array connector.

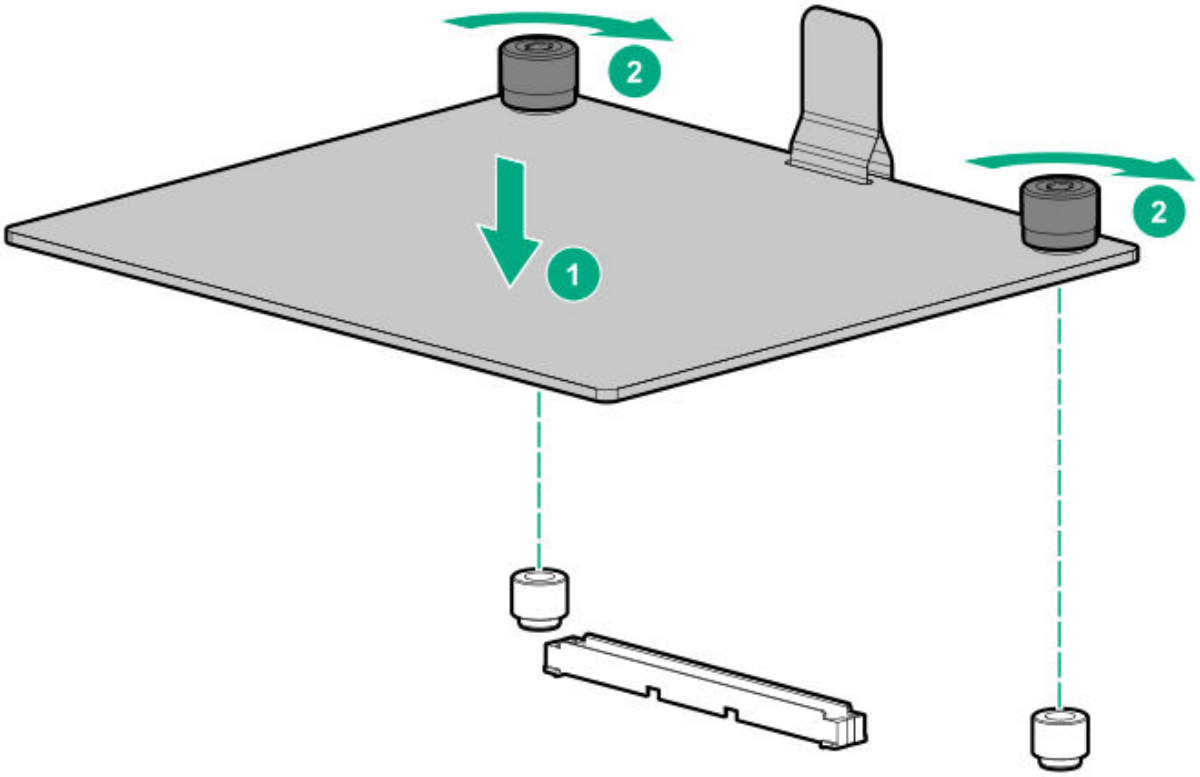

- For Type-p Smart Array controllers, install the controller into an expansion slot.

7. Cable the controller.

The installation is complete.

Energy pack options

Hewlett Packard Enterprise offers two centralized backup power source options to back up write cache content on P-class Smart Array controllers in case of an unplanned server power outage.

- HPE Smart Storage Battery
- HPE Smart Storage Hybrid Capacitor

> **IMPORTANT:**
>
> The HPE Smart Storage Hybrid Capacitor is only supported on Gen10 and later servers.

One energy pack option can support multiple devices. An energy pack option is required for P-class Smart Array controllers. Once installed, the status of the energy pack displays in HPE iLO. For more information, see the HPE iLO user guide on the Hewlett Packard Enterprise website (**https://www.hpe.com/support/ilo-docs**).

HPE Smart Storage Battery

The HPE Smart Storage Battery supports the following devices:

- HPE Smart Array SR controllers

A single 96W battery can support up to 24 devices.

After the battery is installed, it might take up to two hours to charge. Controller features requiring backup power are not re-enabled until the battery is capable of supporting the backup power.

This server supports the 96W HPE Smart Storage Battery with the 145mm cable.

HPE Smart Storage Hybrid Capacitor

The HPE Smart Storage Hybrid Capacitor supports the following devices:

- HPE Smart Array SR controllers

The capacitor pack can support up to three devices.

This server supports the HPE Smart Storage Hybrid Capacitor with the 145mm cable.

Before installing the HPE Smart Storage Hybrid Capacitor, verify that the system BIOS meets the minimum firmware requirements to support the capacitor pack.

> **IMPORTANT:**
> If the system BIOS or controller firmware is older than the minimum recommended firmware versions, the capacitor pack will only support one device.

The capacitor pack is fully charged after the system boots.

Minimum firmware versions

Product	Minimum firmware version
HPE ProLiant server system ROM	1.40
HPE Smart Array SR controllers	1.90

Installing an energy pack

Prerequisites

Before you perform this procedure, make sure that you have the following items available:

- T-10 Torx screwdriver
- The components included with the hardware option kit
- Storage controller backup power cable (ships with the storage controller)
- Make sure that a Smart Array P-class Gen10 controller is installed.
- If you are installing the HPE Smart Storage Hybrid Capacitor, verify that the system BIOS meets the minimum firmware requirements.

Procedure

1. Power down the server.
2. Remove all power:
   a. Disconnect each power cord from the power source.
   b. Disconnect each power cord from the server.
3. Do one of the following:
   - Extend the server from the rack.
   - Remove the server from the rack.
4. Remove the access panel.
5. Do one of the following:

- Remove the air baffle.
- If installed, remove the 4 LFF midplane drive cage.

6. Remove the fan cage.
7. Install the energy pack.

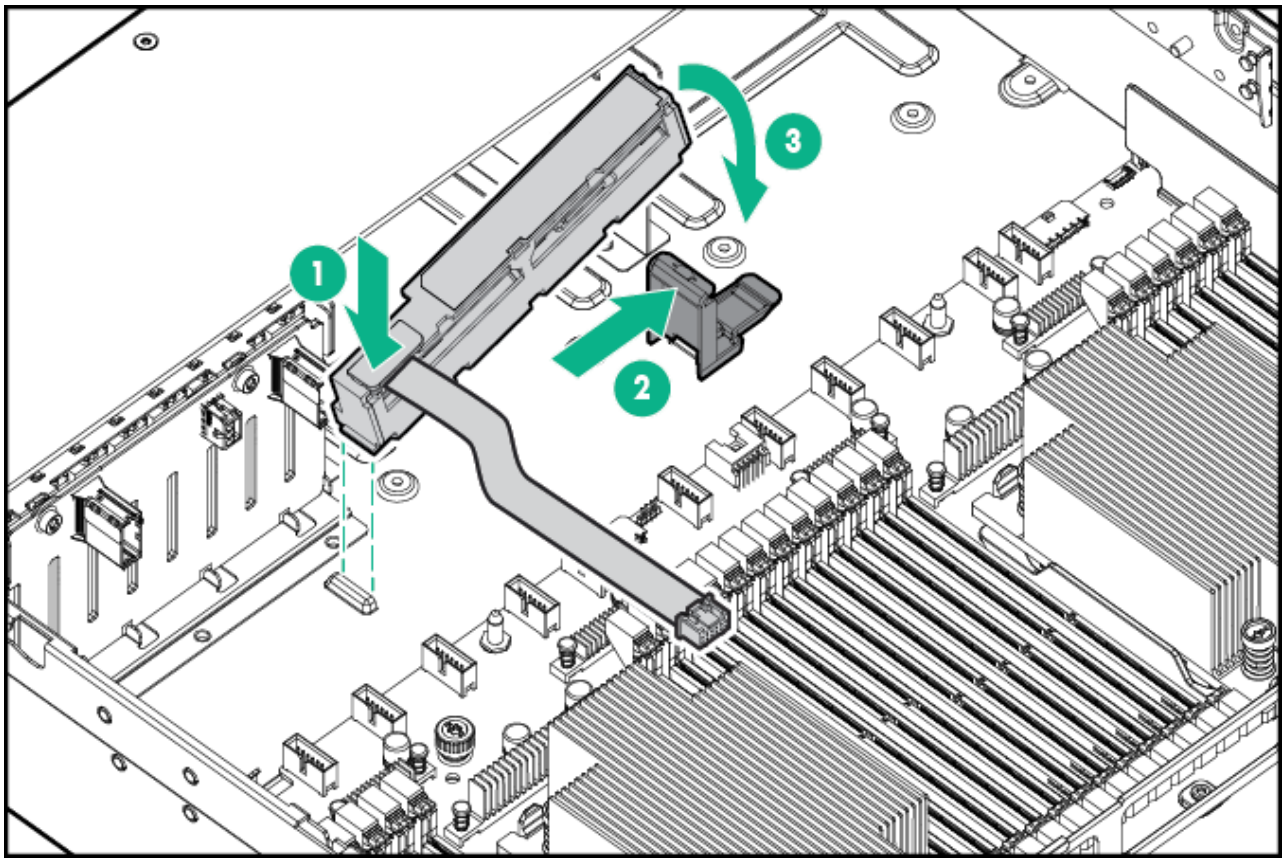

8. Connect the energy pack cable.

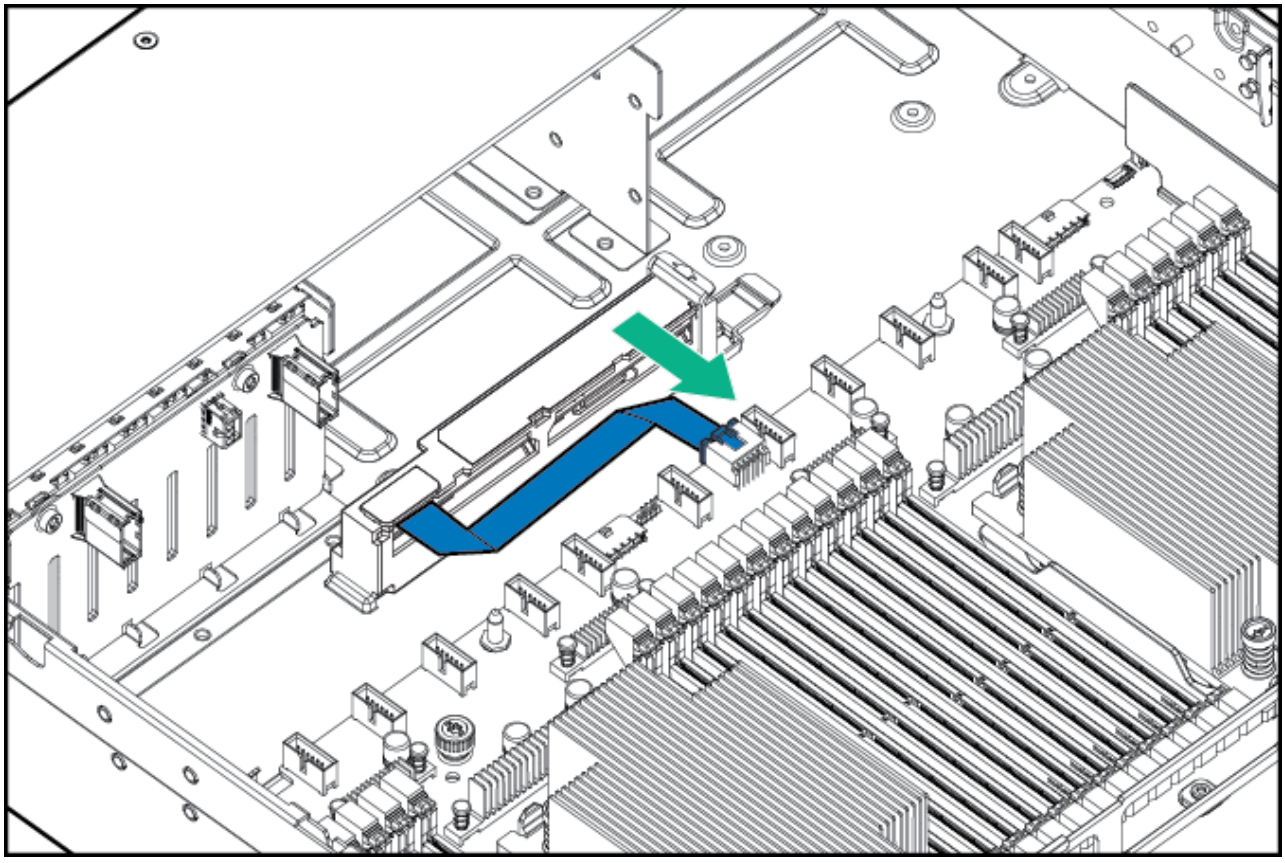

9. Connect the storage controller backup power cable.
10. Install the fan cage.
11. Do one of the following:
    - Install the air baffle.
    - Install the midplane 4 LFF SAS/SATA drive cage.
12. Install the access panel.
13. Install the server into the rack.
14. Connect each power cord to the server.
15. Connect each power cord to the power source.
16. Power up the server.

The installation is complete.

Riser and riser cage options

Installing primary and secondary risers

Prerequisites

Before you perform this procedure, make sure that you have the following items available:

- T-15 Torx screwdriver
- The components included with the hardware option kit

Procedure

1. Power down the server.
2. Do one of the following:
   - Disconnect each power cord from the power source.
   - Disconnect each power cord from the server.
3. Do one of the following:
   - Extend the server from the rack.
   - Remove the server from the rack.
4. Remove the access panel.
5. Remove the riser cage.
6. Remove the riser board.

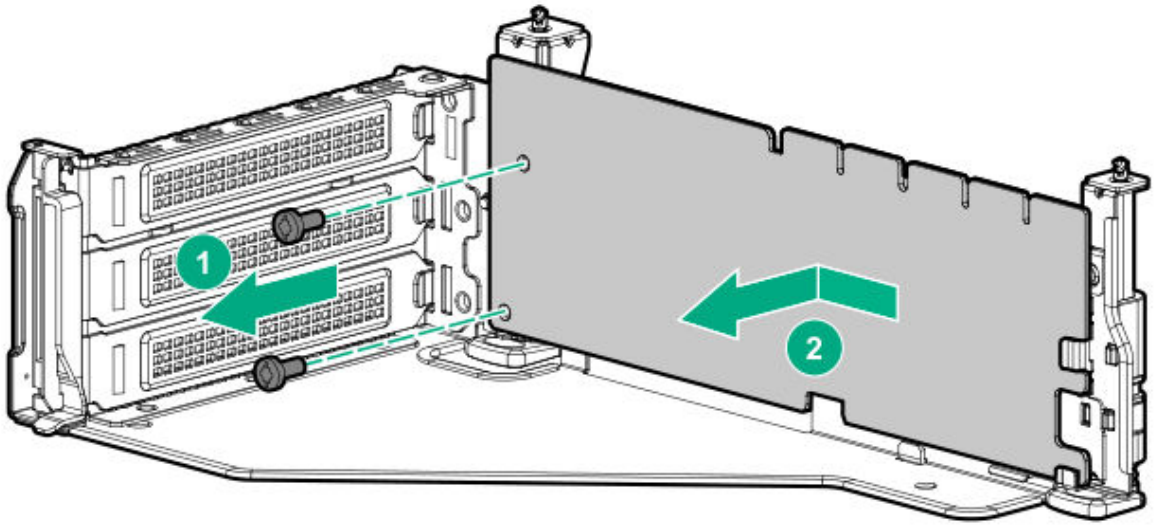

7. Install the riser.

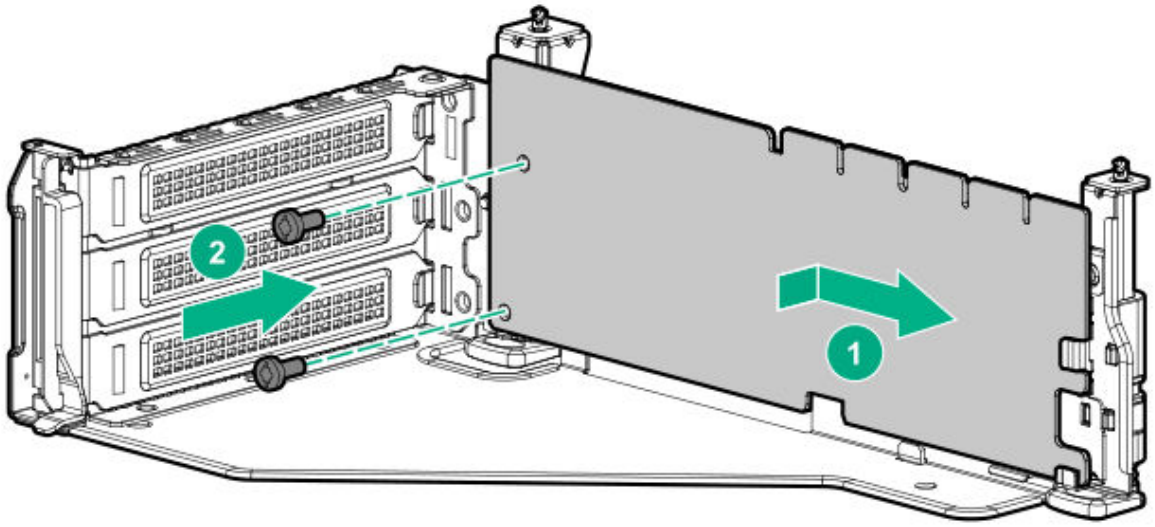

8. Install any expansion boards, if needed.
9. Connect data cables to the riser or expansion board, if needed.
10. Install the riser cage, if needed.
11. If needed, connect data cables to drive backplanes.

The installation is complete.

Installing tertiary risers

Prerequisites

Before you perform this procedure, make sure that you have the following items available:

- The components included with the hardware option kit
- T-15 Torx screwdriver

Procedure

1. Power down the server.
2. Do one of the following:
   - Disconnect each power cord from the power source.
   - Disconnect each power cord from the server.
3. Do one of the following:
   - Extend the server from the rack.
   - Remove the server from the rack.
4. Remove the access panel.
5. Remove the riser cage.
6. Install the riser.

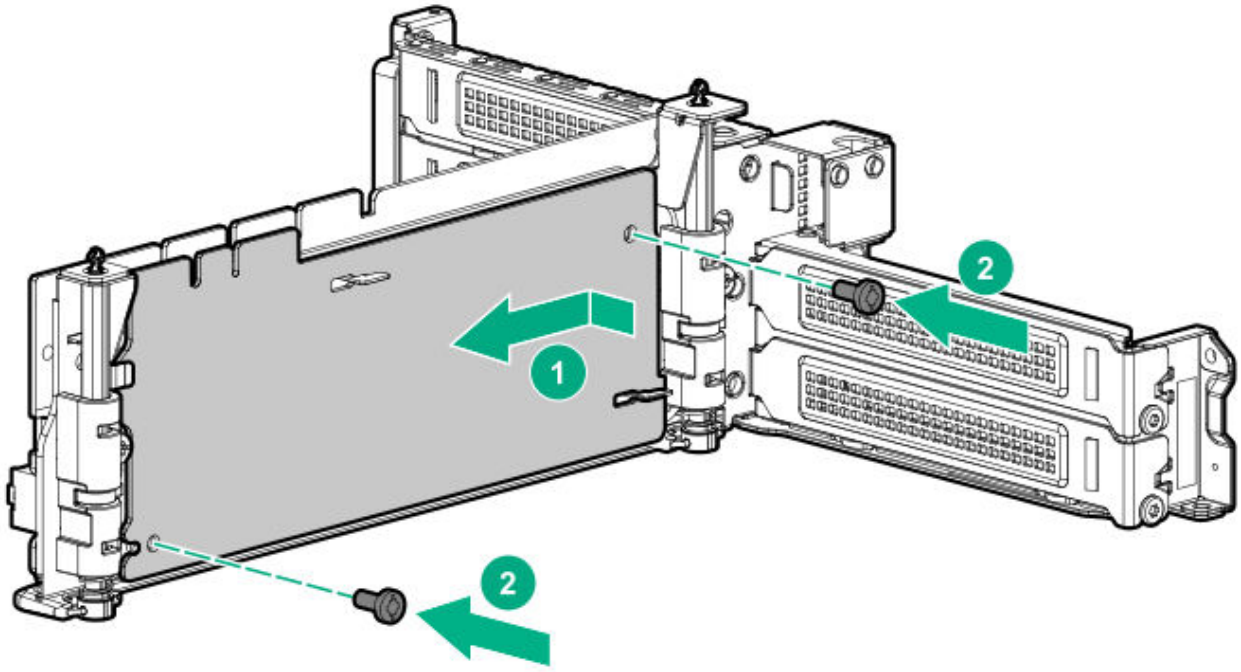

7. Install any expansion cards, if needed.
8. Connect any data cables to riser or expansion boards.
9. Install the tertiary riser cage.
10. Connect cables to drive backplanes, if needed.

The installation is complete.

Installing a secondary riser cage

Prerequisites

Before you perform this procedure, make sure that you have the following items available:

- The components included with the hardware option kit
- T-15 Torx screwdriver

Procedure

1. Observe the following alert:

CAUTION: To prevent damage to the server or expansion boards, power down the server and remove all AC power cords before removing or installing the PCI riser cage.

2. Power down the server.
3. Remove all power:
   a. Disconnect each power cord from the power source.
   b. Disconnect each power cord from the server.
4. Do one of the following:
   - Extend the server from the rack.
   - Remove the server from the rack.
5. Remove the access panel.
6. Remove the rear wall blank.

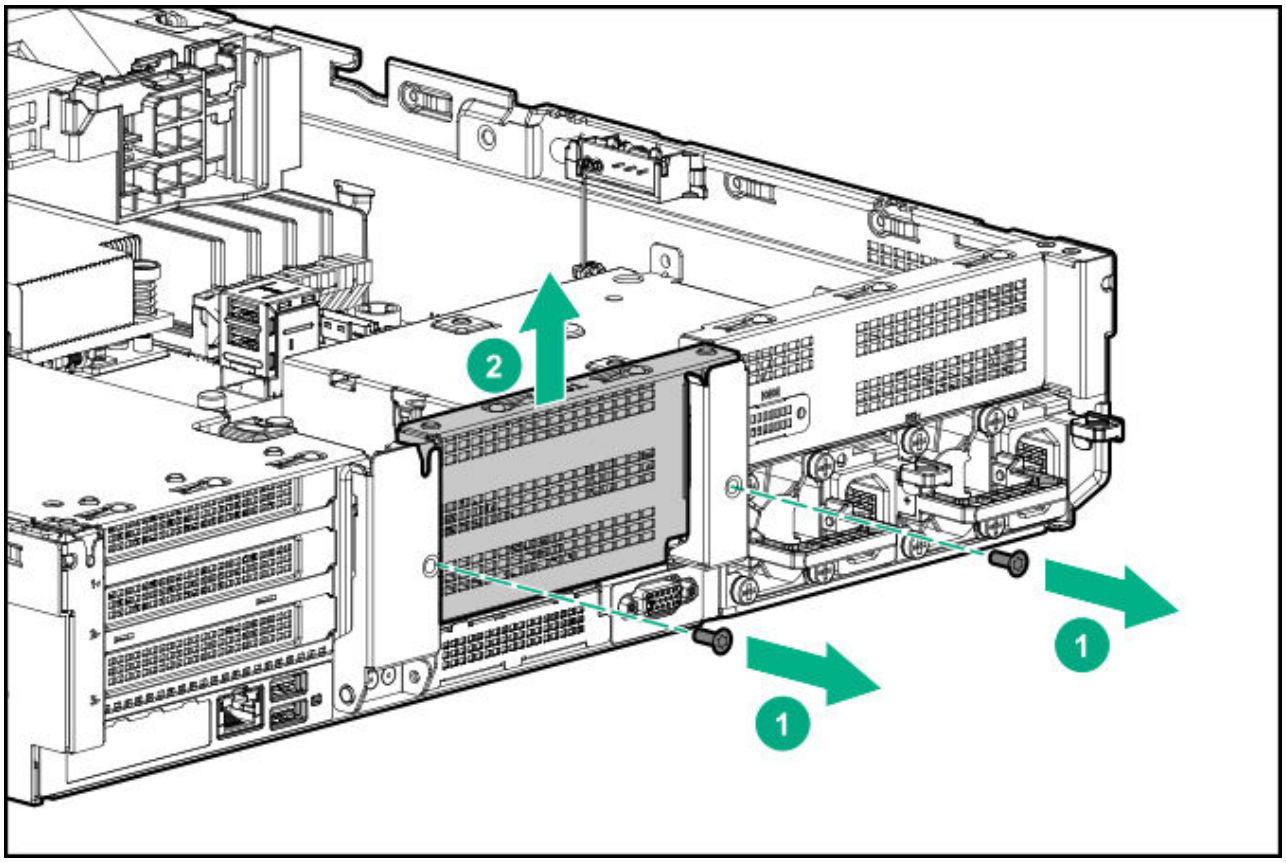

7. Install any expansion boards, if needed.

8. Install the riser cage:

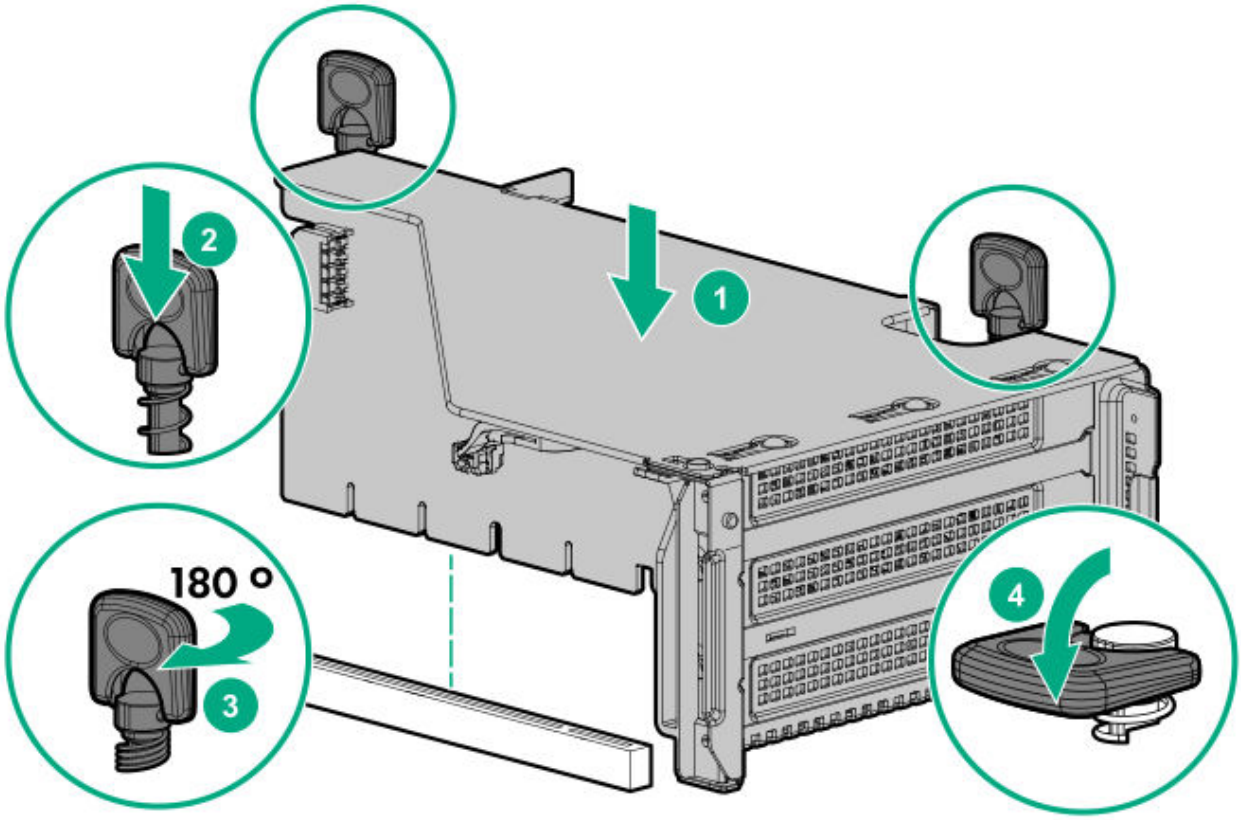

The installation is complete.

Installing a tertiary riser cage

Prerequisites

Before you perform this procedure, make sure that you have the following items available:

- The components included with the hardware option kit
- T-15 Torx screwdriver

Procedure

1. Observe the following alert.

CAUTION: To prevent damage to the server or expansion boards, power down the server and remove all AC power cords before removing or installing the PCI riser cage.

2. Power down the server.
3. Remove all power:
   a. Disconnect each power cord from the power source.
   b. Disconnect each power cord from the server.
4. Do one of the following:
   - Extend the server from the rack.
   - Remove the server from the rack.
5. Remove the access panel.
6. Remove the rear wall blanks.

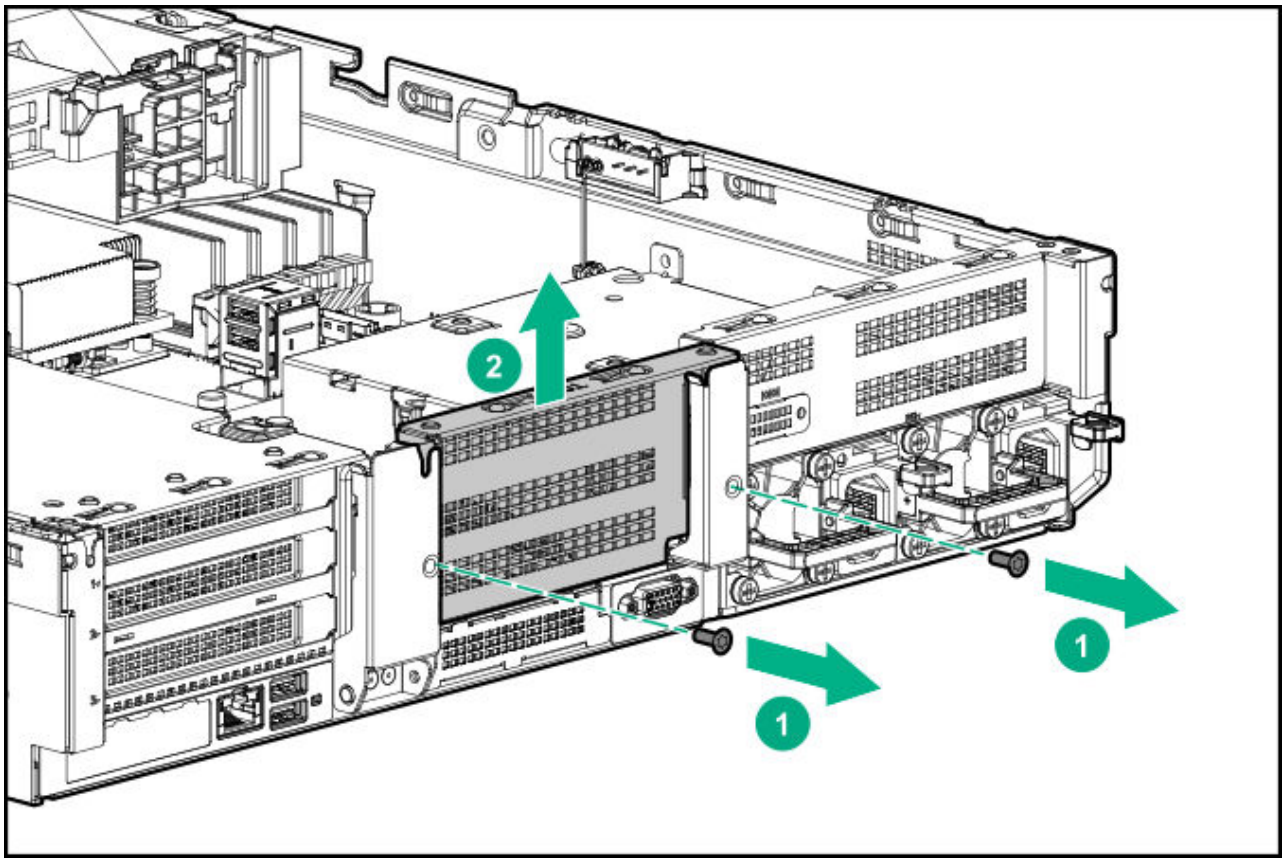

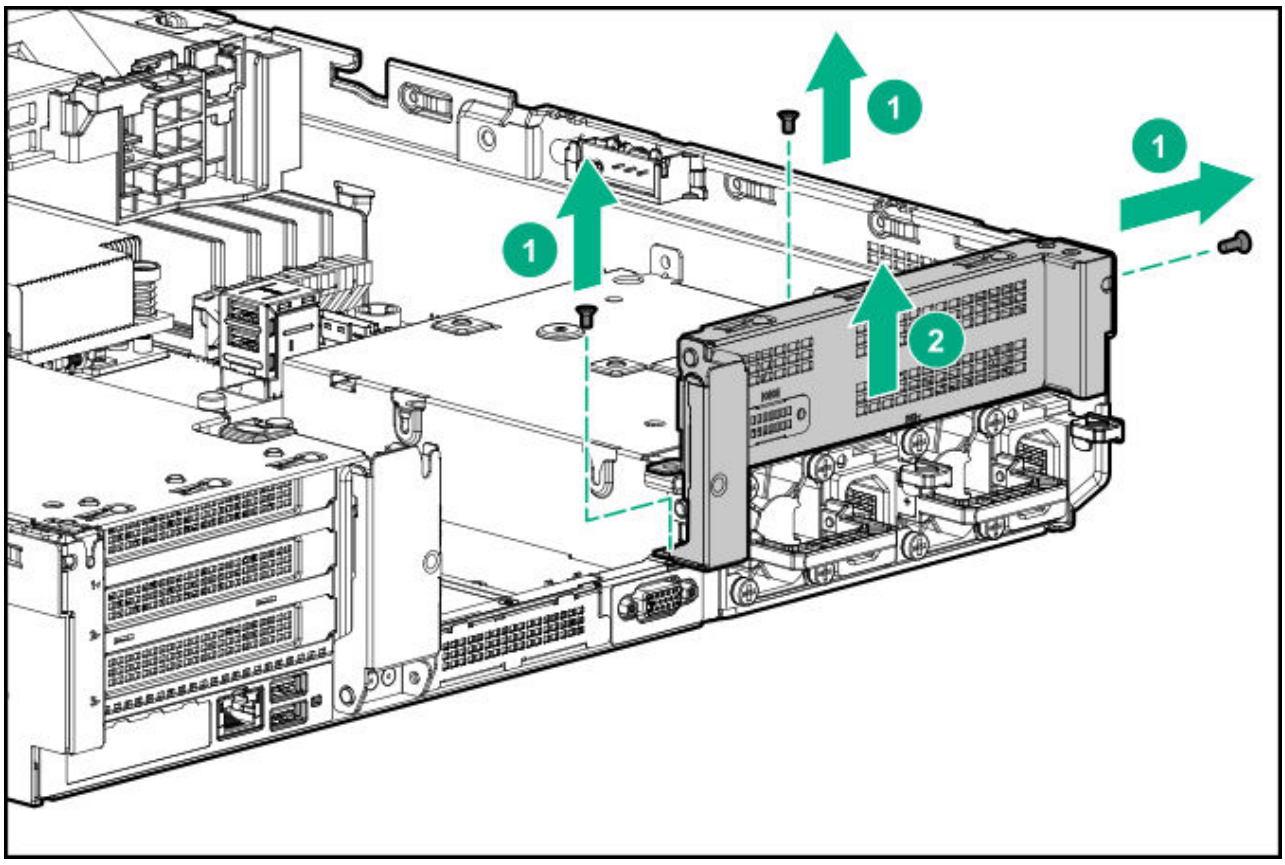

7. Install the rear blank from the option kit.

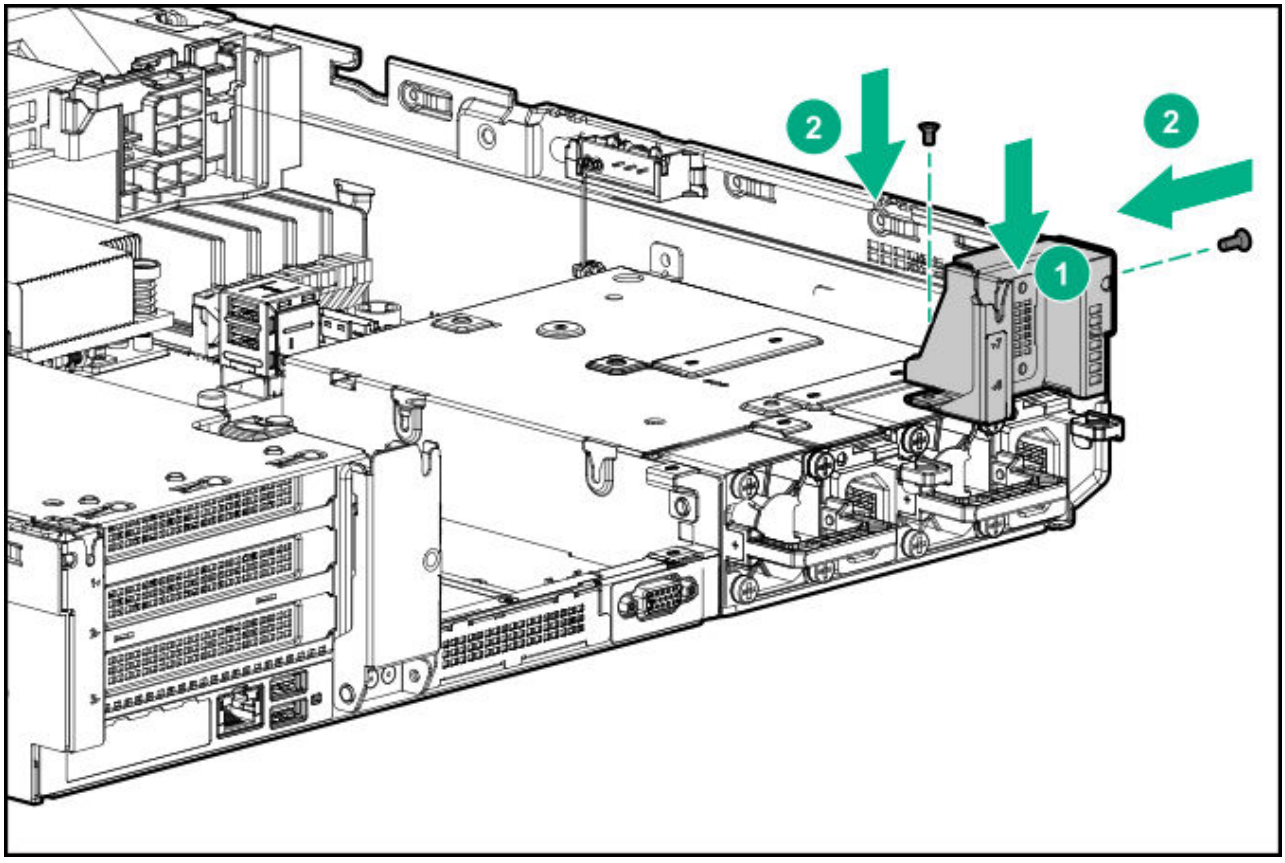

8. Install any expansion boards, if needed.
9. Install the tertiary riser cage:

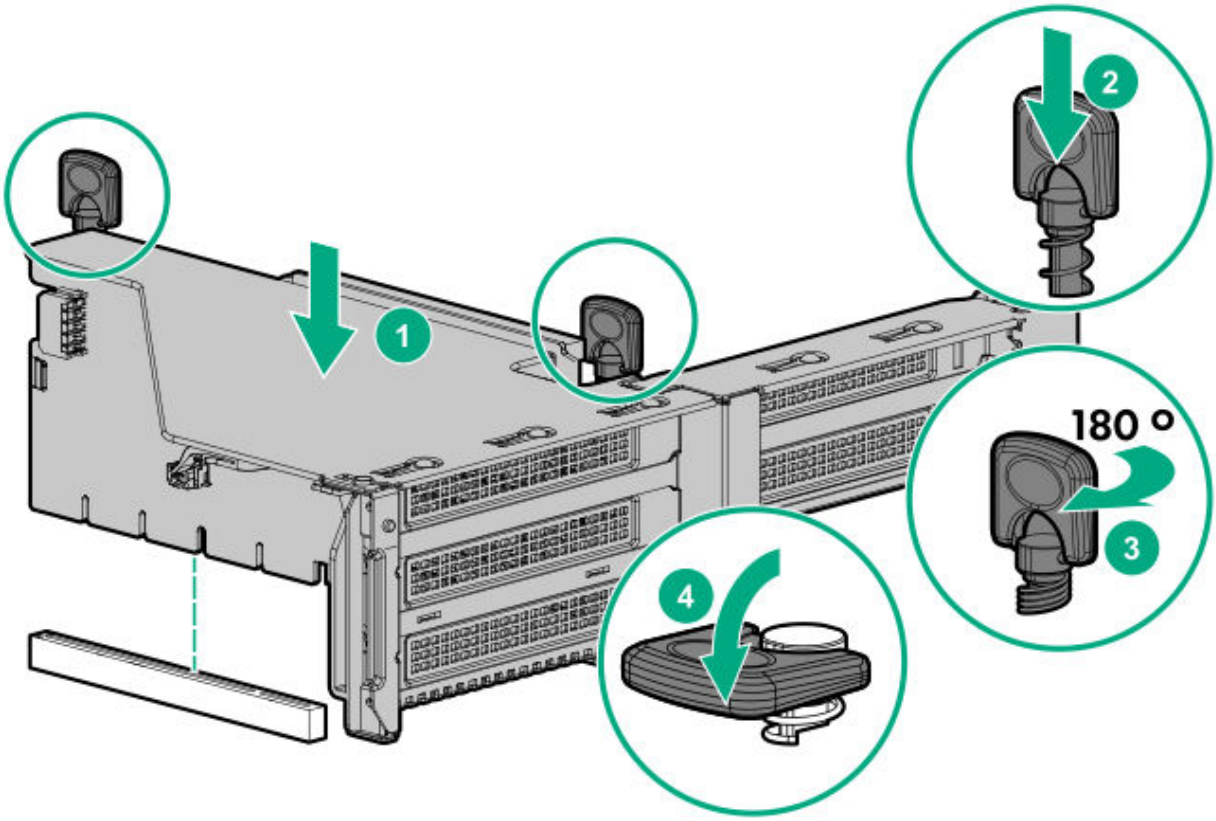

The installation is complete.

Installing the 2 NVMe Slim SAS riser option

Prerequisites

Before you perform this procedure, make sure that you have the following items available:

- The components included with the hardware option kit
- T-15 Torx screwdriver

Procedure

1. Power down the server.
2. Do one of the following:
    - Disconnect each power cord from the power source.
    - Disconnect each power cord from the server.

3. Do one of the following:
    - Extend the server from the rack.
    - Remove the server from the rack.
4. Remove the access panel.
5. Using the labels on the cable, connect the cables to the riser.
6. Install the tertiary riser cage.
7. Connect the cable to the drive backplane.

The installation is complete.

Installing the 8 NVMe Slim SAS riser option

The 8NVMe Slim SAS riser can be installed in the primary or secondary position.

Prerequisites

Before you perform this procedure, make sure that you have the following items available:

- The components included with the hardware option kit
- T-15 Torx screwdriver

Procedure

1. Power down the server.
2. Do one of the following:
    - Disconnect each power cord from the power source.
    - Disconnect each power cord from the server.
3. Do one of the following:
    - Extend the server from the rack.
    - Remove the server from the rack.
4. Remove the access panel.
5. Using the labels on the cable, connect the cables to the riser.
6. Do one of the following:

To install the riser in the primary position:

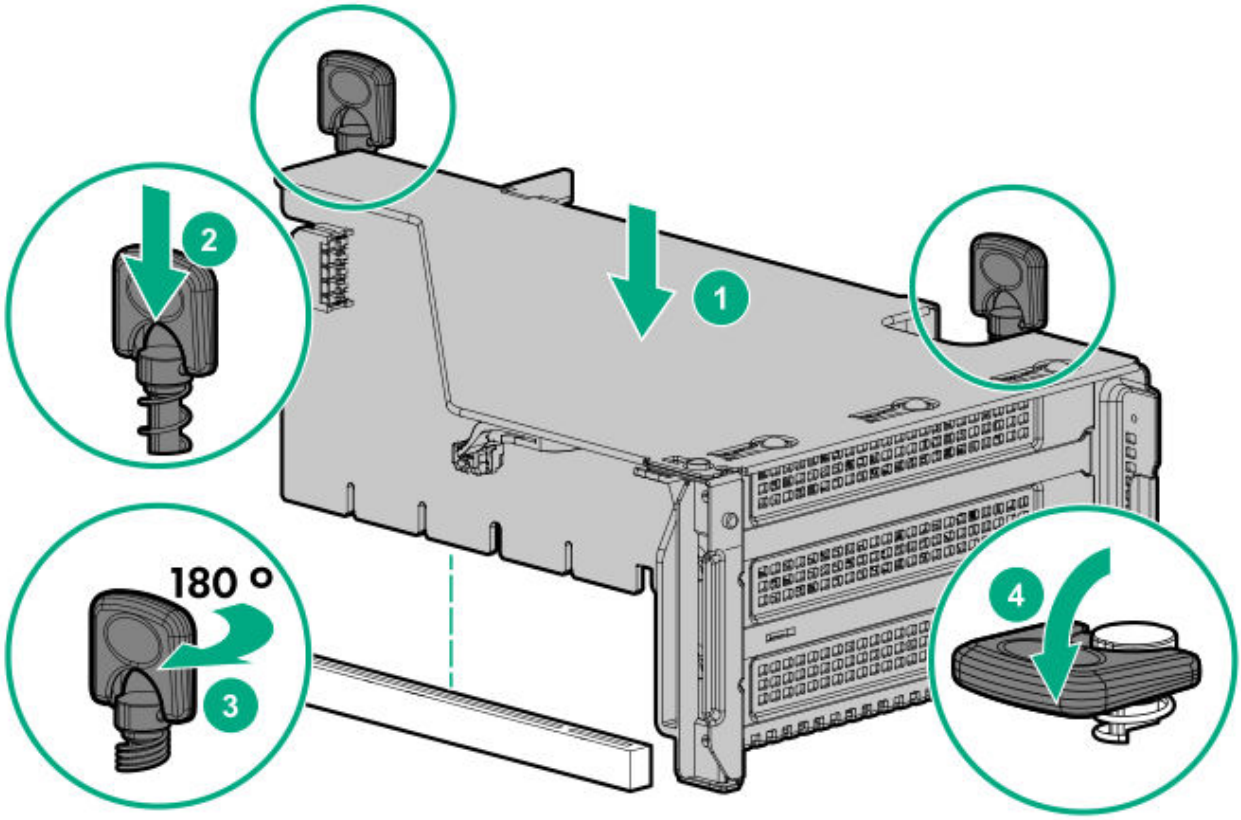

To install the riser in the secondary position, see secondary riser cage.

7. Connect data cables to the drive backplane.

Expansion slots

Supported PCIe form factors

All slots support full-height expansion cards. Use the following information to find supported lengths for each slot.

Slot description example

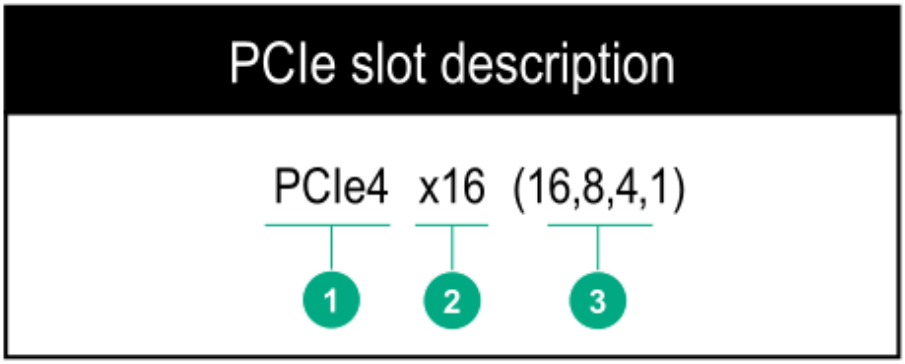

Item	Description
1	Gen4 signaling rate
2	Physical connector link width
3	Negotiable link width(s)

Primary riser connector

PCIe slot and card length	2-slot riser (Optional)	2-slot riser (Optional)
Slot 1 - Full-length/Full-height (FL /FH)	—	PCIe4 x16 (16, 8, 4, 2, 1)
Slot 2 - Full-length/Full-height (FL /FH)	PCIe4 x16 (16, 8, 4, 2, 1)	PCIe4 x16 (16, 8, 4, 2, 1)
Slot 3 - Full-length/Full-height (FL /FH)	PCIe4 x16 (16, 8, 4, 2, 1)	—

*The server ships with one PCIe4 riser cage installed in the primary riser cage connector.

Secondary riser connector

PCIe slot and card length	2-slot riser (Optional)	2-slot riser (Optional)
Slot 4 - Full-length/Full-height (FL /FH)	—	PCIe4 x16 (16, 8, 4, 2, 1)
Slot 5 - Full-length/Full-height (FL /FH)	PCIe4 x16 (16, 8, 4, 2, 1)	PCIe4 x16 (16, 8, 4, 2, 1)
Slot 6 - Full-length/Full-height (FL /FH)	PCIe4 x16 (16, 8, 4, 2, 1)	—

Tertiary riser connector

PCIe slot and card length	2-slot riser (Optional)	1-slot riser (Optional)
Slot 7 - Full-length/Full-height (FL /FH)	PCIe4 x16 (8, 4, 2, 1)	PCIe4 x16 (16, 8, 4, 2, 1)
Slot 8 - Full-length/Full-height (FL /FH)	PCIe4 x16 (8, 4, 2, 1)	—

Installing expansion boards

WARNING: To reduce the risk of personal injury, electric shock, or damage to the equipment, remove the power cord to remove power from the server. The front panel Power On/Standby button does not completely shut off system power. Portions of the power supply and some internal circuitry remain active until AC power is removed.

CAUTION: To prevent improper cooling and thermal damage, do not operate the server unless all PCI slots have either an expansion slot cover or an expansion board installed.

To install the component:

Prerequisites

Before you perform this procedure, make sure that you have the components included with the hardware option kit.

Procedure

1. Power down the server.
2. Remove all power:
   a. Disconnect each power cord from the power source.
   b. Disconnect each power cord from the server.
3. Do one of the following:
   - Extend the server from the rack.
   - Remove the server from the rack.
4. Remove the access panel.
5. Remove the riser cage.

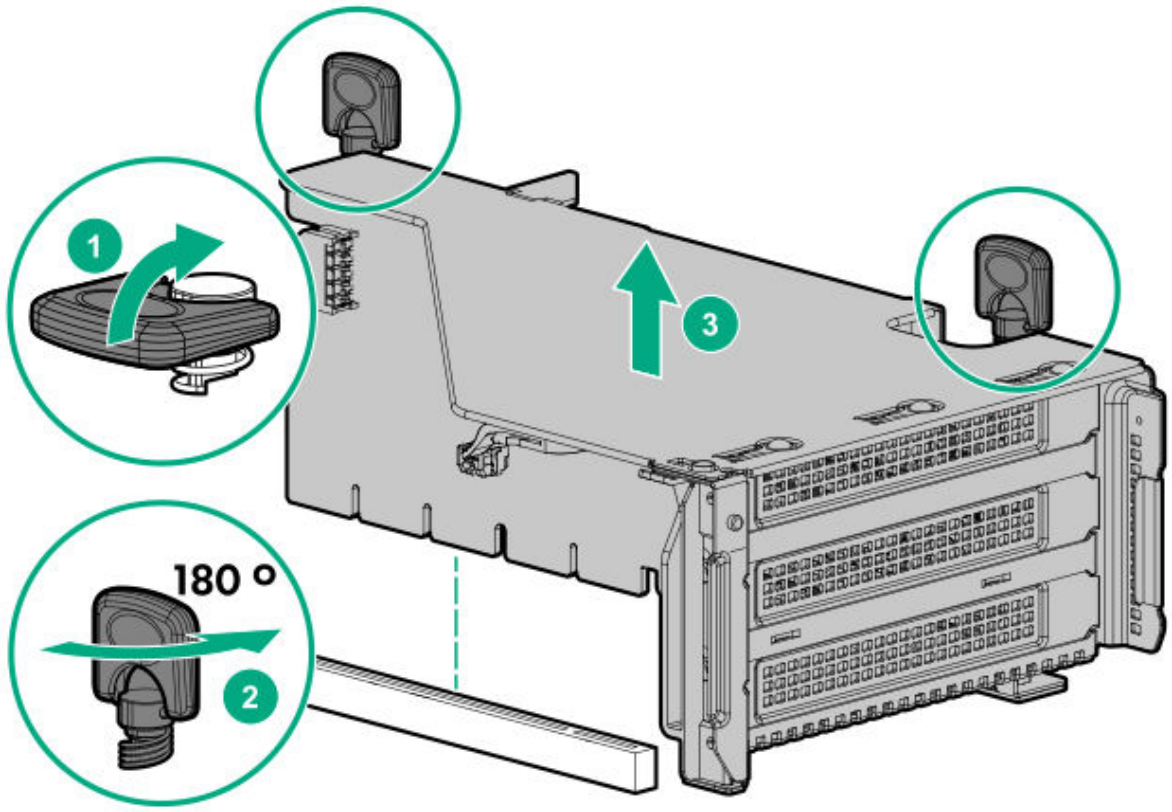

6. Identify and then remove the PCIe blank from the riser cage.

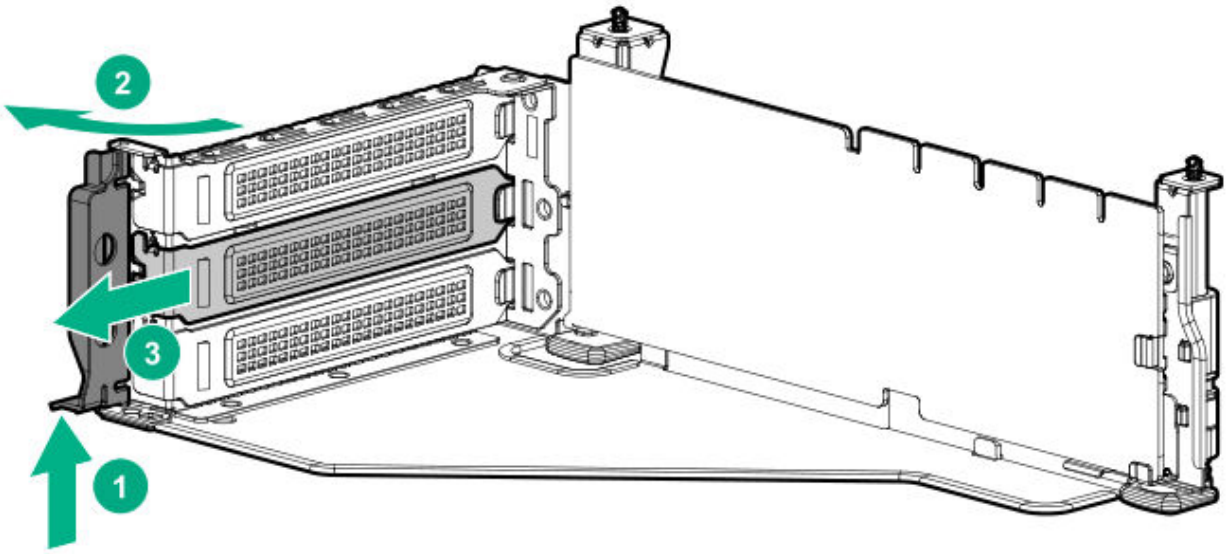

7. Install the expansion board.

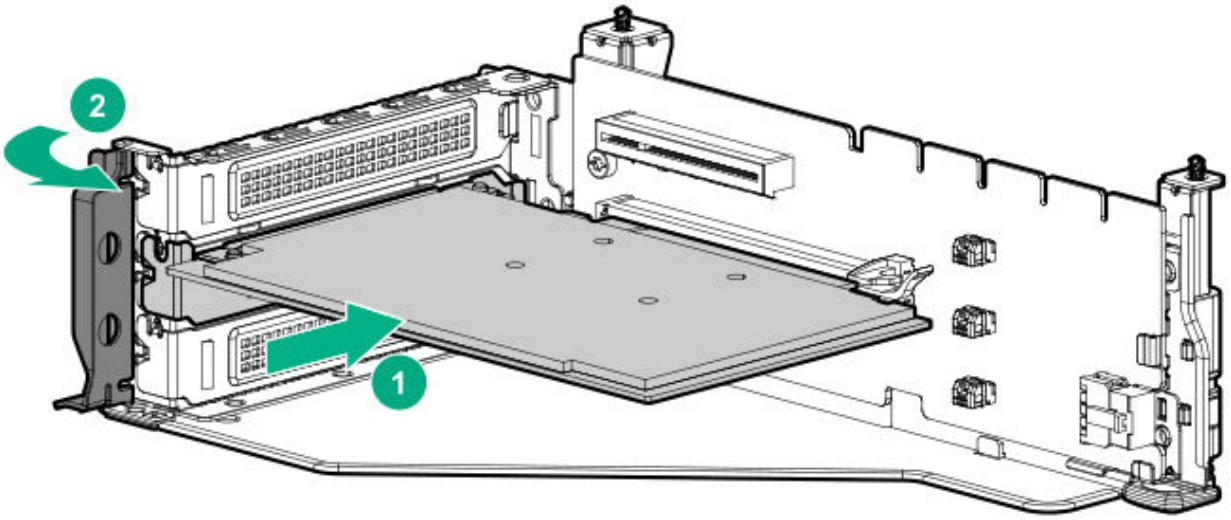

8. If internal cables are required for the expansion board, connect the cables.
9. Install the riser cage.

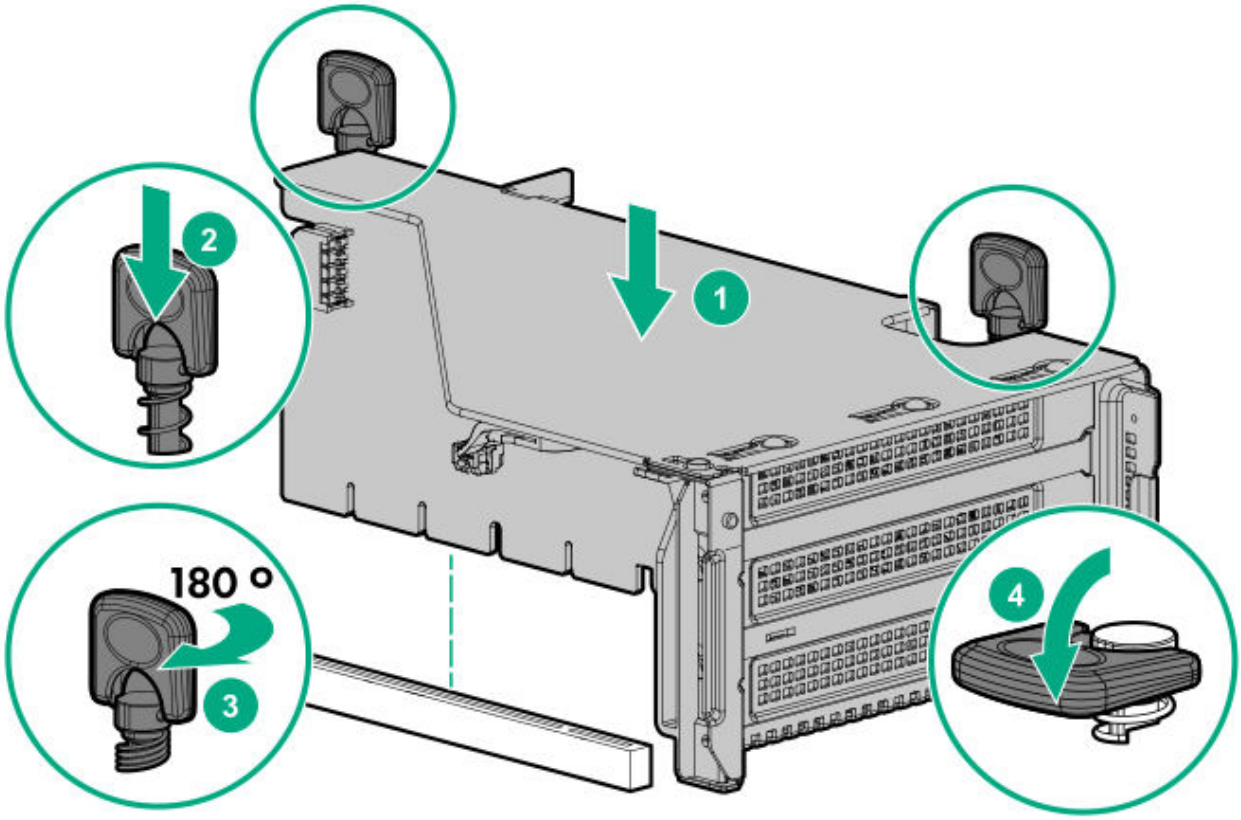

.0. Install the access panel.

.1. Slide the server into the rack.

.2. Connect each power cord to the server.

.3. Connect each power cord to the power source.

.4. Power up the server.

The installation is complete.

Installing a 12G SAS Expander Card

For 24 SFF configurations, install 8 SFF front drive cages in boxes 1 and 2.

For configurations including a 2 SFF rear drive cage, install the drive cage over the power supplies.

HPE recommends installing the SAS expander card into slot 3 of the primary PCIe riser.

To ensure that cables are connected correctly, observe the labels on the cable and port.

Prerequisites

Before you perform this procedure, make sure that you have the following items available:

- The components included with the hardware option kit
- Storage cables for each drive box
- A storage controller

Be sure that you have the latest firmware for the controllers and the expander card. To download the latest firmware, see the **Hewlett Packard Enterprise website**.

Procedure

1. Power down the server.
2. Remove all power:
   a. Disconnect each power cord from the power source.
   b. Disconnect each power cord from the server.
3. Do one of the following:
   - Extend the server from the rack.
   - Remove the server from the rack.
4. Remove the access panel.
5. Remove the air baffle.
6. Remove the fan cage.
7. Remove the riser cage.

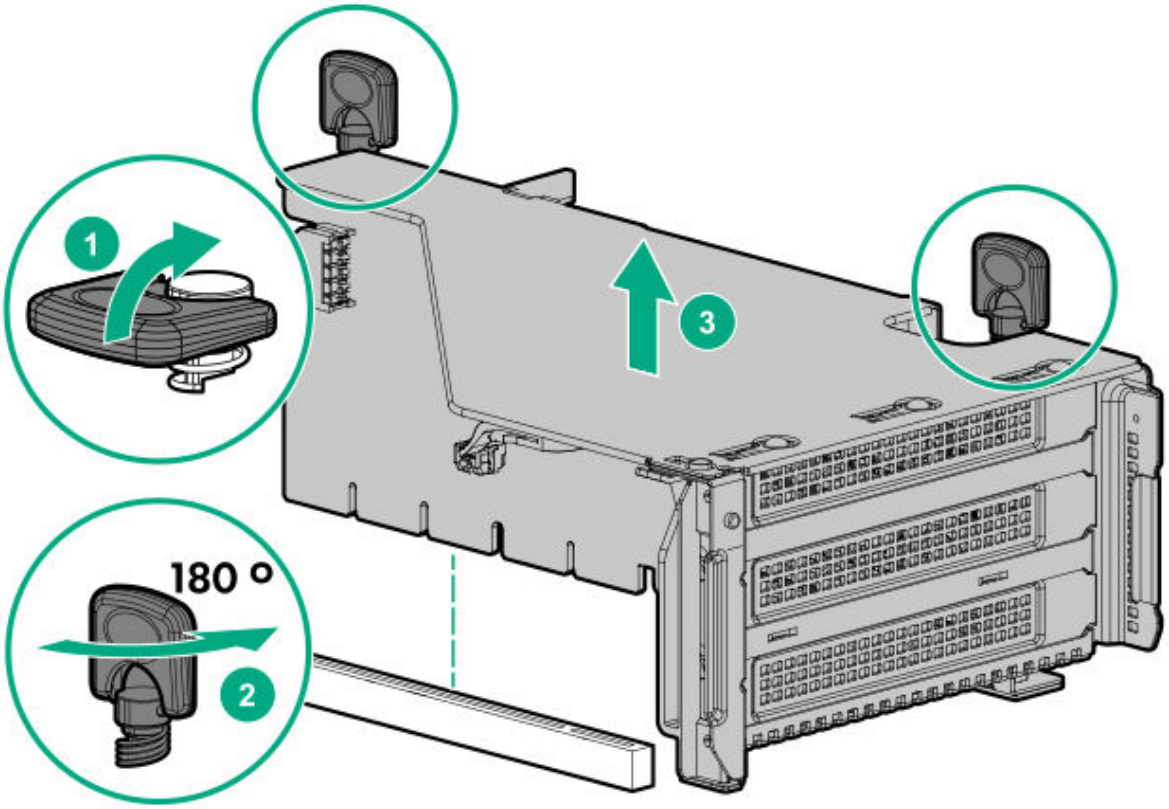

8. Locate slot 3, and then remove the expansion slot blank.
9. Install the 12G SAS expander card.

> **IMPORTANT:** The 12G SAS expander card requires a controller. The server supports embedded, type-a, and type-p Smart Array controllers. If using a type-p Smart Array controller, then install the controller in slot 1.

.0. Using the labels on each cable, connect the cables to the SAS expander.

For drive numbering, see Drive bay numbering.

.1. Install the riser cage.

.2. Connect cables from the 12G SAS expander to the controller.

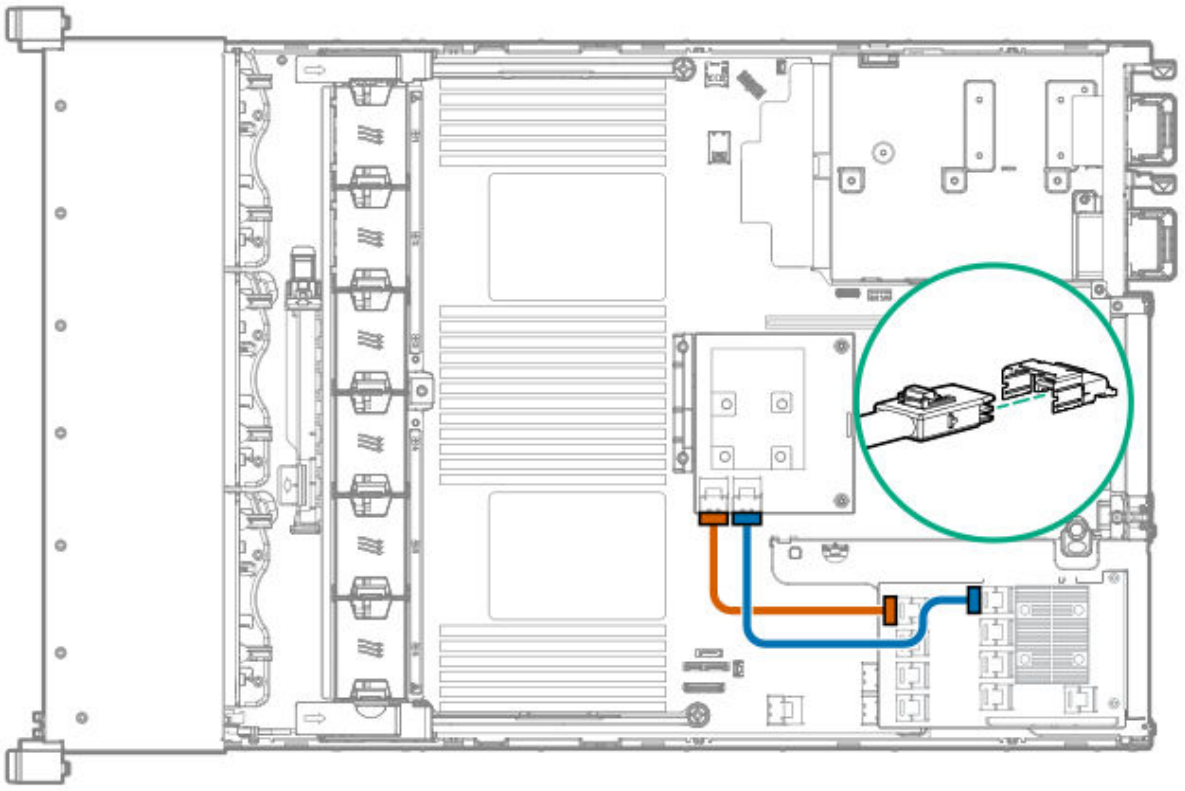

.3. Connect cables from the 12G SAS expander to the drive backplanes.

A standard configuration is shown. For additional cabling diagrams, see "Cabling".

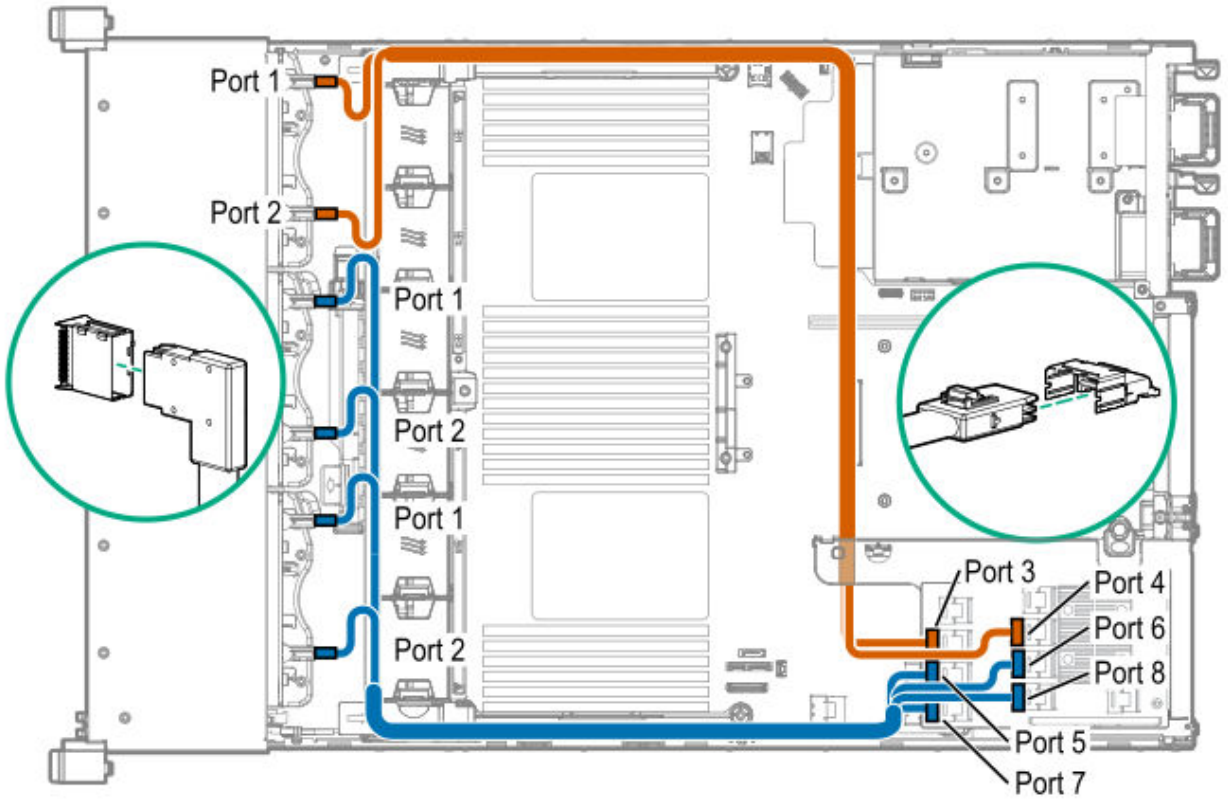

.4. Install the fan cage.

.5. Install the air baffle.

.6. Install the access panel.

.7. Install the server into the rack.

.8. Connect each power cord to the server.

.9. Connect each power cord to the power source.

!0. Power up the server.

The installation is complete.

Accelerator options

This server supports various accelerator options to meet your computational and graphics workload requirements. For a list of supported accelerator models, see the server QuickSpecs on the Hewlett Packard Enterprise website (**https://www.hpe.com/info/qs**).

- PCIe workload accelerators – These options are PCIe card-based, direct-attach solutions that use solid-state storage technology directly on the PCI bus to boost I/O performance and reduce latency to scale in line with your processing requirements.
- Computational and graphics accelerators – These options deliver accelerated compute performance for a range of deep learning, high-performance computing (HPC), and graphics-intensive applications.

Installing an accelerator or GPU

This server supports up to three double-width or five single-width accelerators. The accelerator/GPU can be installed into the primary, secondary, or tertiary position. This procedure shows an installation in the secondary position. However, the same procedure can be used to install in the primary or tertiary position.

WARNING: To reduce the risk of personal injury, electric shock, or damage to the equipment, remove the power cord to remove power from the server. The front panel Power On/Standby button does not completely shut off system power. Portions of the power supply and some internal circuitry remain active until AC power is removed.

CAUTION: To prevent improper cooling and thermal damage, do not operate the server unless all PCI slots have either an expansion slot cover or an expansion board installed.

Prerequisites

Before you perform this procedure, make sure that you have the following items available:

- The components included with the hardware option kit
- T-20 Torx screwdriver
- T-10 Torx screwdriver
- If the total maximum power requirement of all installed accelerators/GPUs is higher than 25 W, the high-performance fans and heatsinks are required.

Procedure

1. Power down the server.

2. Remove all power:
   a. Disconnect each power cord from the power source.
   b. Disconnect each power cord from the server.
3. Do one of the following:
   - Extend the server from the rack.
   - Remove the server from the rack.
4. Remove the access panel.
5. Remove the air baffle.
6. If you are installing a full-length accelerator, install the corresponding retention clip:

   Install the clip that supports your configuration. Primary, secondary, and tertiary positions are shown.

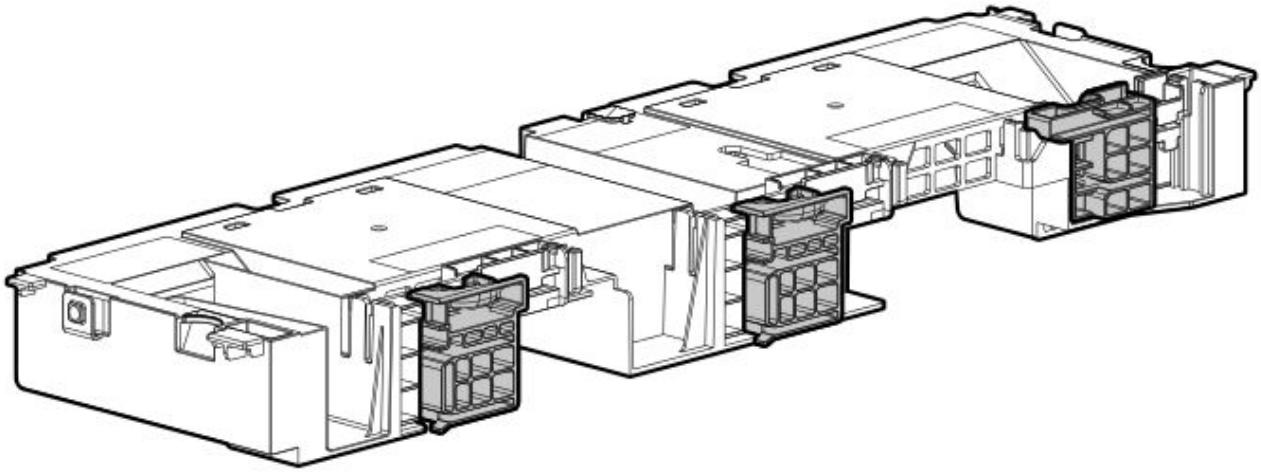

7. If the total maximum power requirement of all installed accelerators is higher than 25 W, install the high-performance fans and heatsinks to maintain proper system cooling:
   a. Install high-performance fans.
   b. Install high-performance heatsinks.
8. Install the air baffle.
9. Remove the PCI riser blank.

   The secondary PCI riser blank is shown.

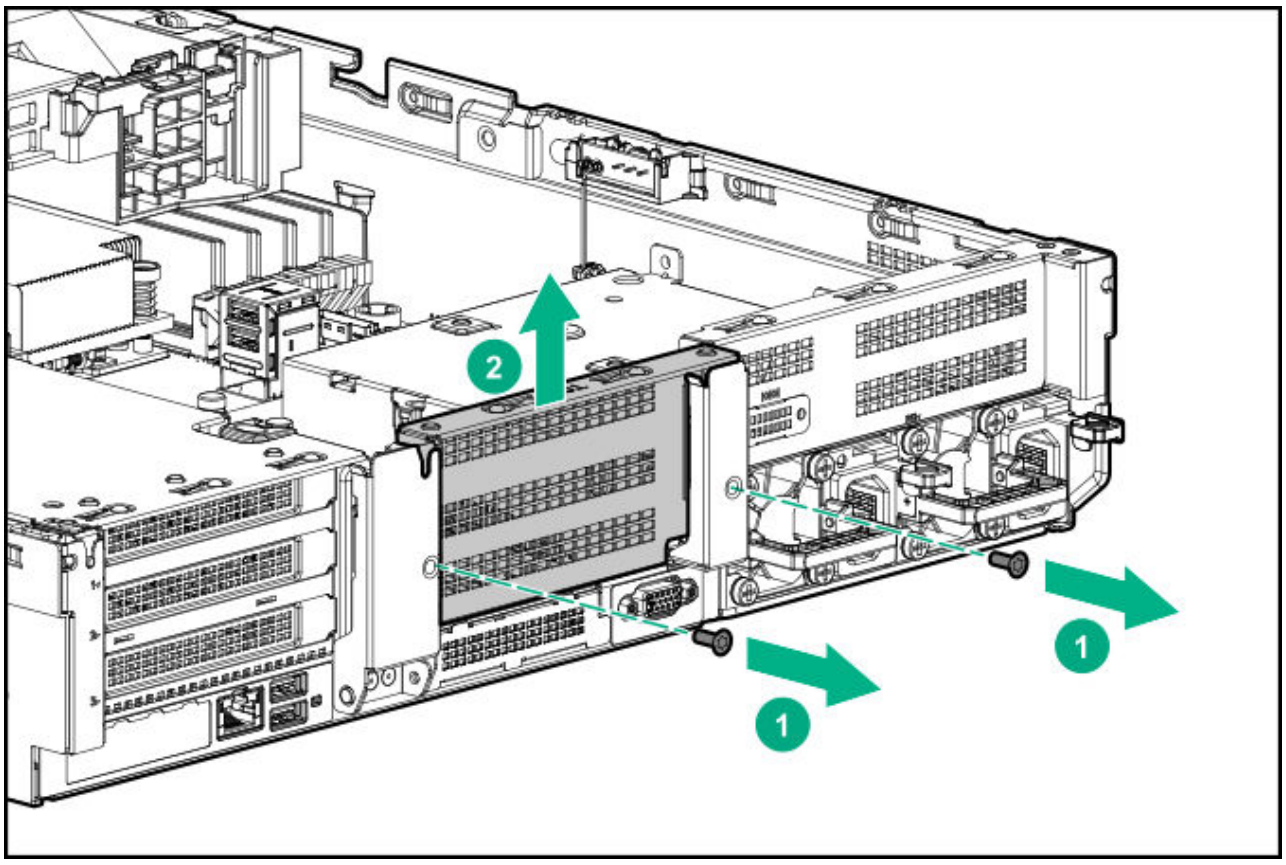

To install an accelerator in the primary riser cage, see "Removing a riser cage".

To install an accelerator in the tertiary riser cage, see "Installing a tertiary riser cage".

.0. Remove the blank.

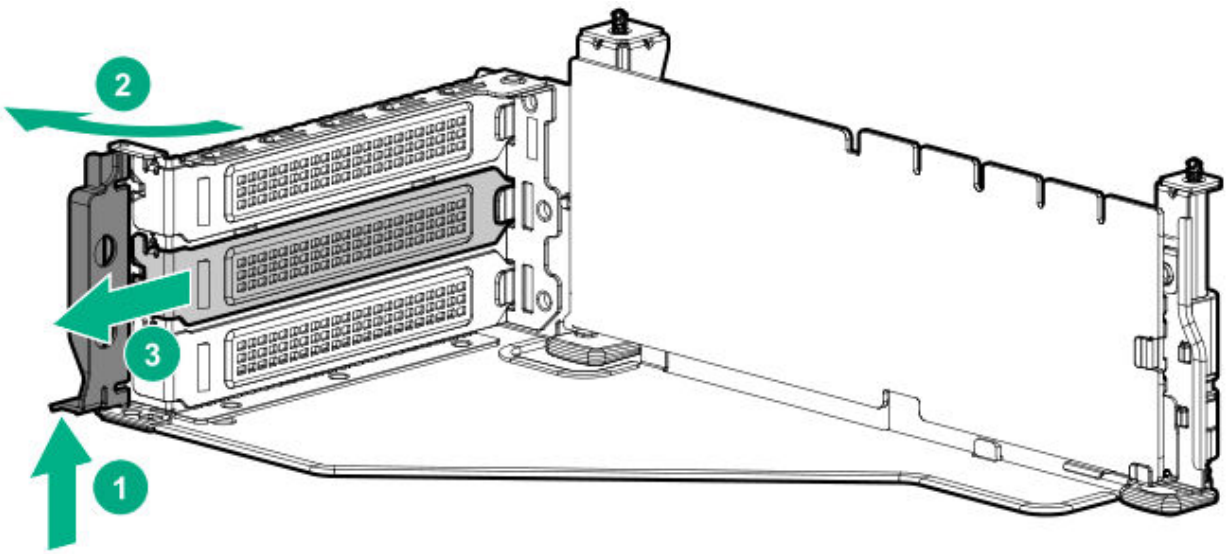

.1. Install the accelerator into the secondary riser.

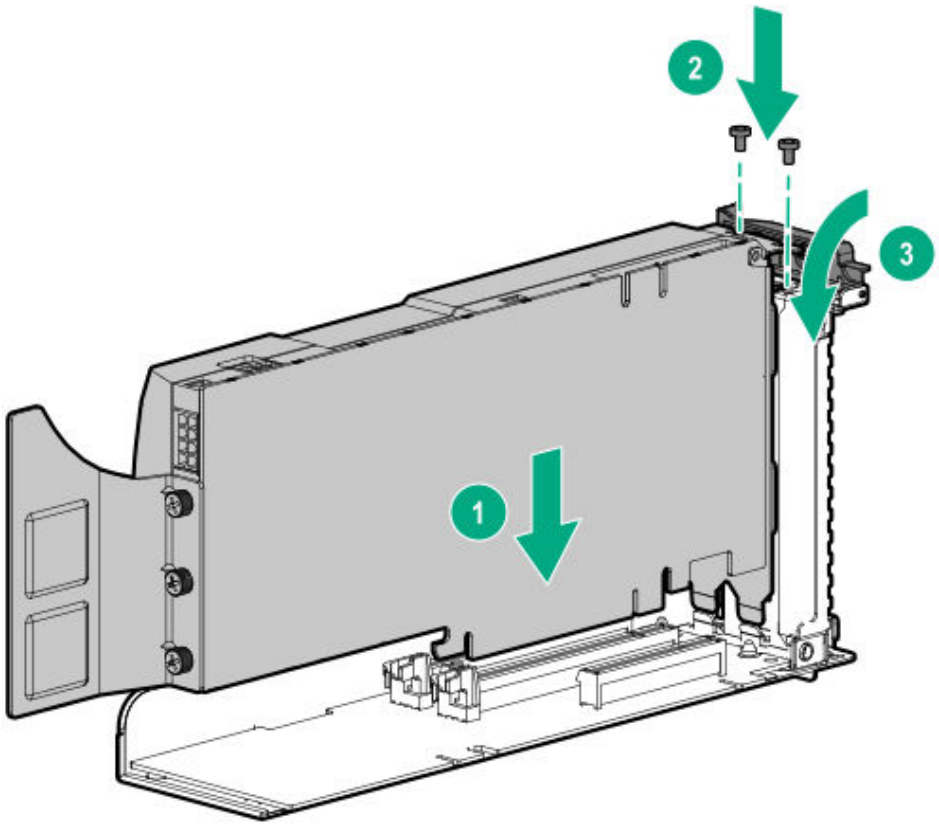

.2. If you are installing an accelerator that requires an auxiliary power cable, connect the power cable from the accelerator to the riser.

.3. If you are installing a full-length accelerator, slide the retention clip to the unlocked position.

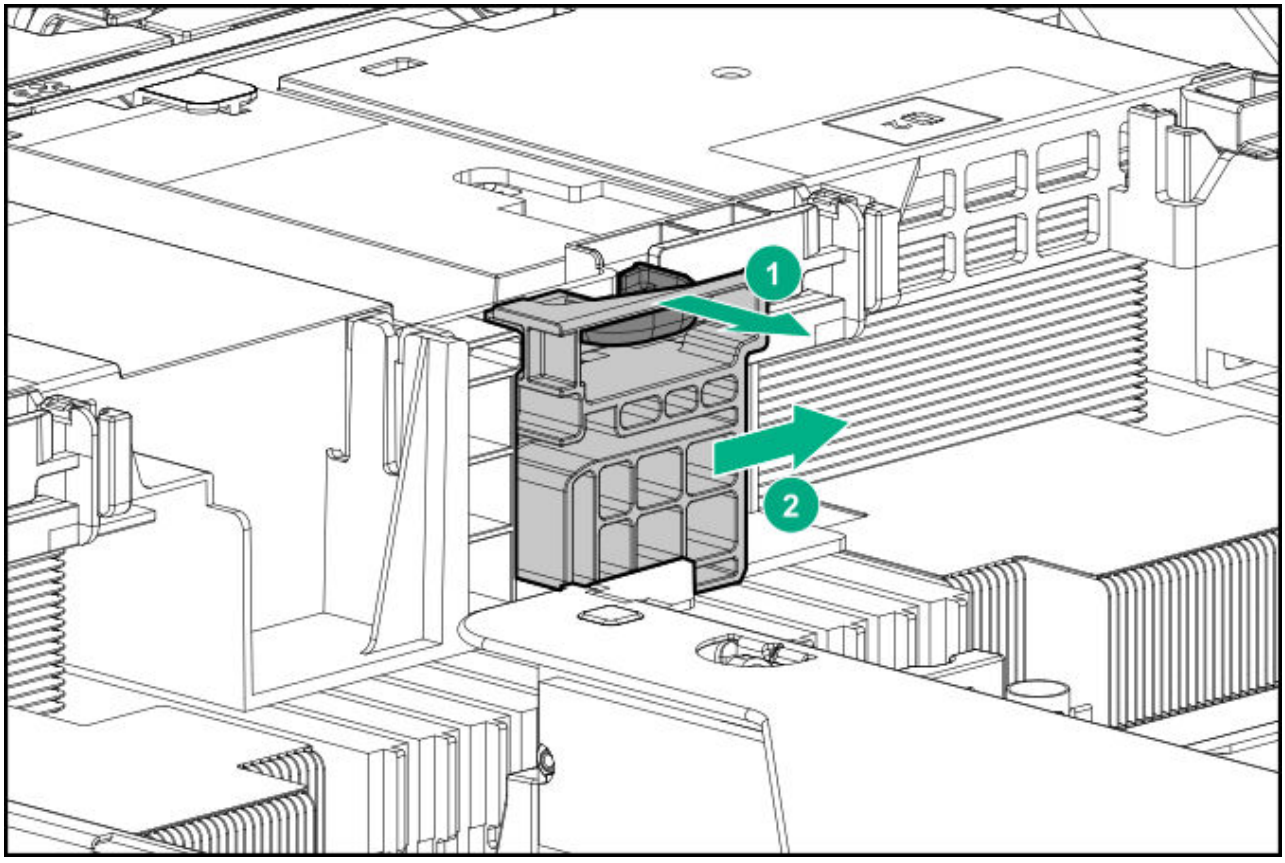

.4. Install the riser cage.

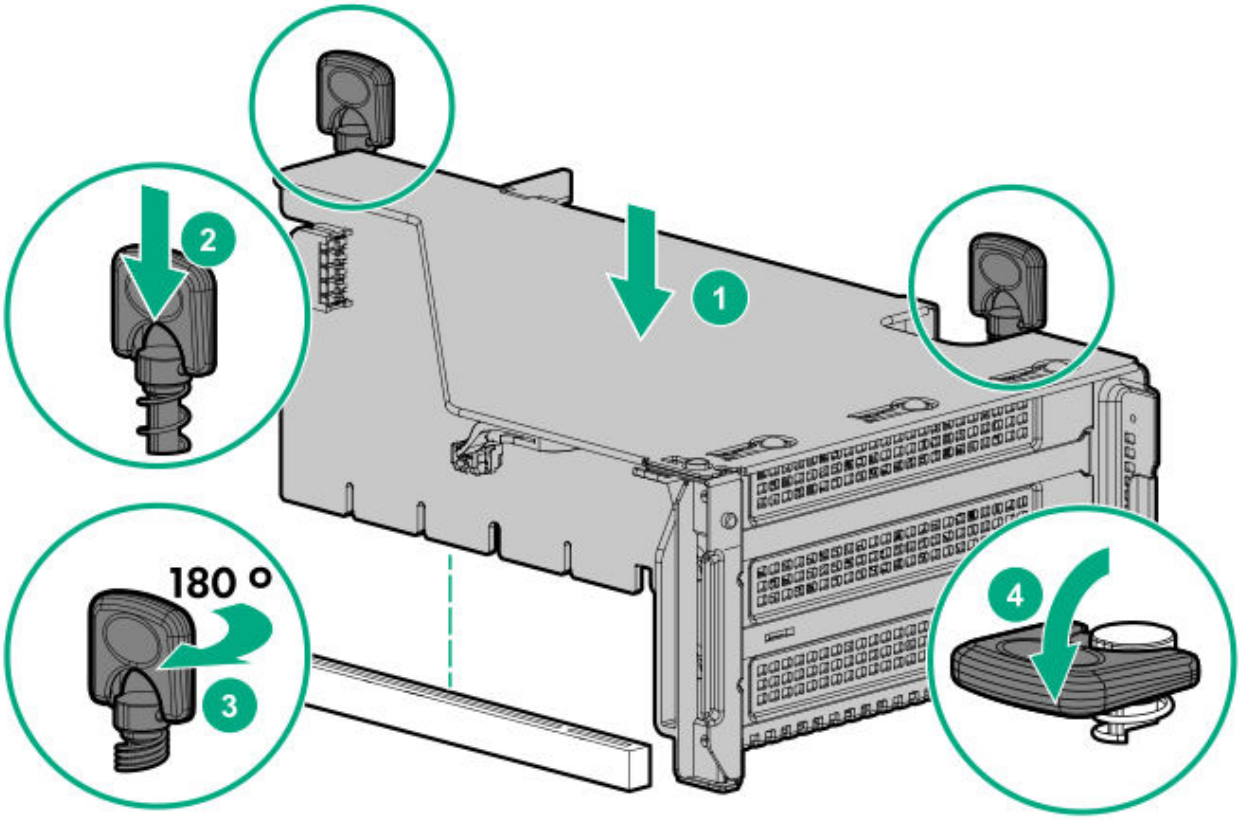

.5. If you are installing a full-length accelerator, slide the retention clip to the locked position.

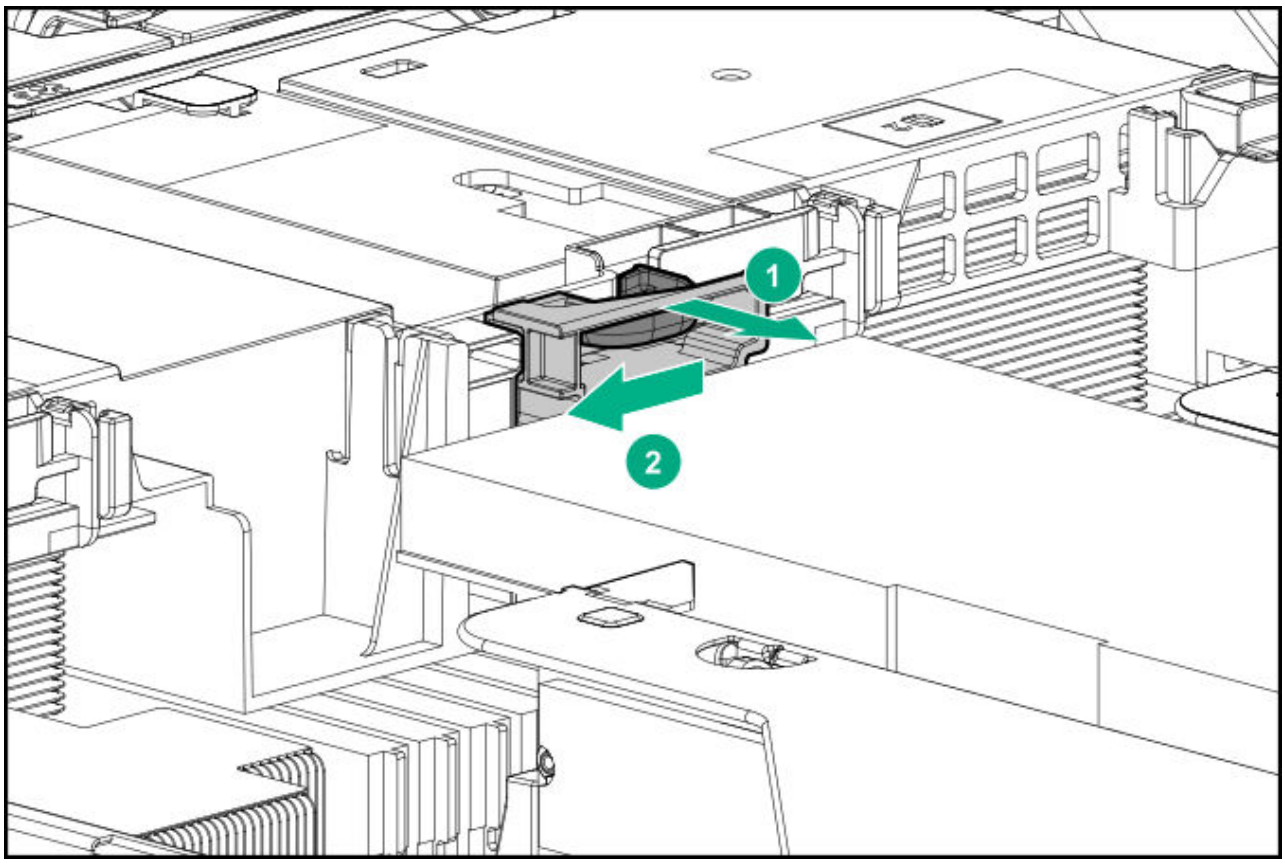

The installation is complete.

Installing an OCP NIC 3.0 adapter

Prerequisites

Before you begin this procedure, make sure that the components included with the hardware option kit are available.

Procedure

1. Power down the server.
2. Remove all power:
   a. Disconnect each power cord from the power source.
   b. Disconnect each power cord from the server.
3. Do one of the following:

- Extend the server from the rack.
- Remove the server from the rack.

4. Remove the access panel.
5. Remove the rear wall blank or riser.
6. Remove the OCP NIC 3.0 adapter blank.

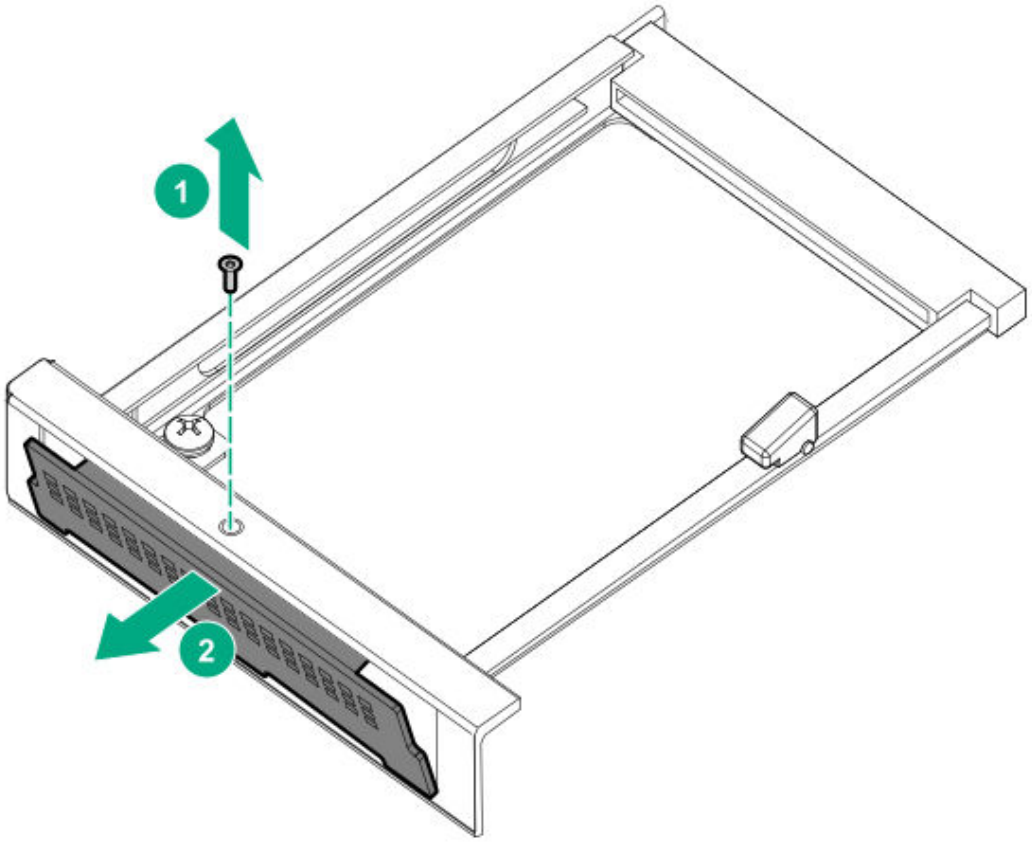

7. Some servers provide a locking latch. Lift the locking latch, and then slide the OCP NIC 3.0 adapter through the rear of the chassis. Align and install the OCP NIC 3.0 adapter into the slot. Press firmly to fully seat the adapter into the connector. Rotate the latch to lock the adapter in place.

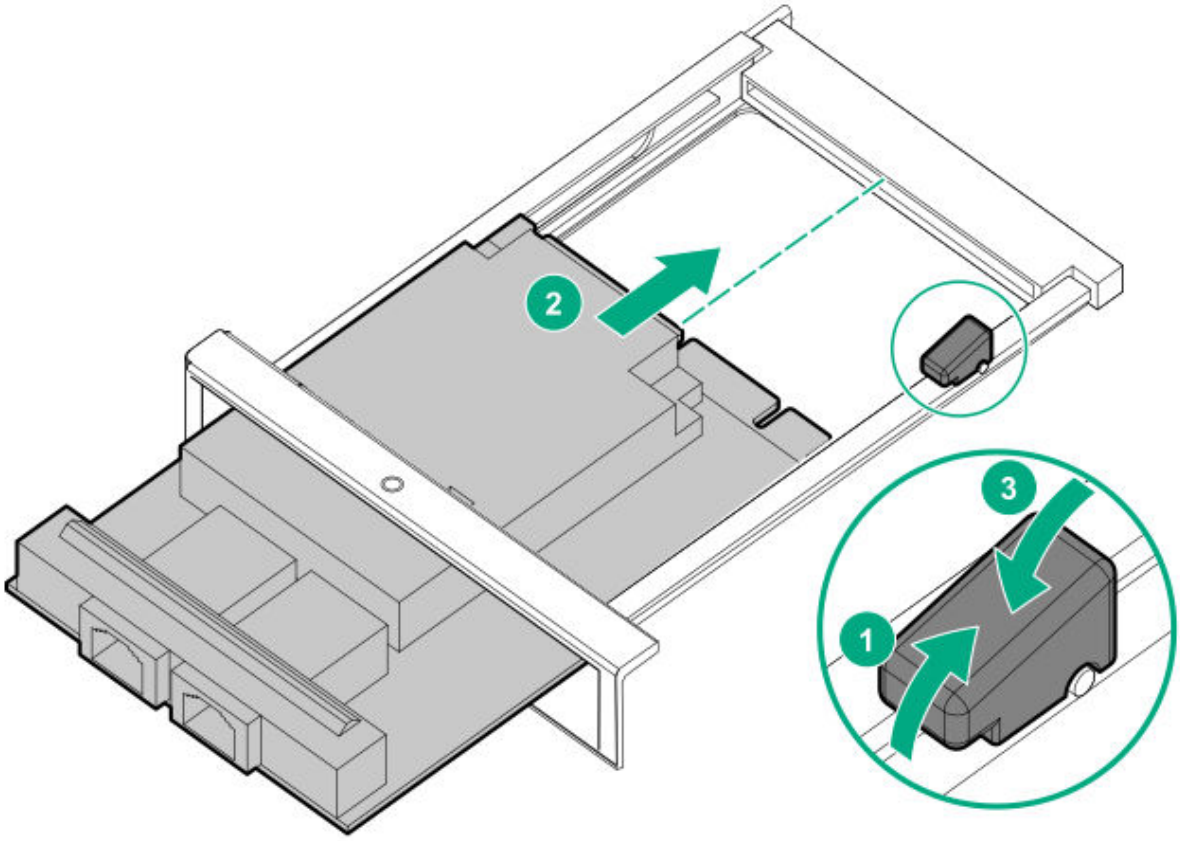

8. Connect the power and data cables.
9. Install the access panel.
10. Slide the server into the rack.
11. Connect each power cord to the server.
12. Connect each power cord to the power source.
13. Power up the server.

Installing the Pensando DSP DSC-25 2p SFP28 card

Procedure

1. Power down the server.
2. Do one of the following:
   - Extend the front drive cages out of the chassis.

- Remove the server from the rack.
- Remove the compute module from the enclosure.

3. Place the server on a flat, level work surface.
4. Remove the access panel.
5. Remove the PCIe riser cage, if applicable.

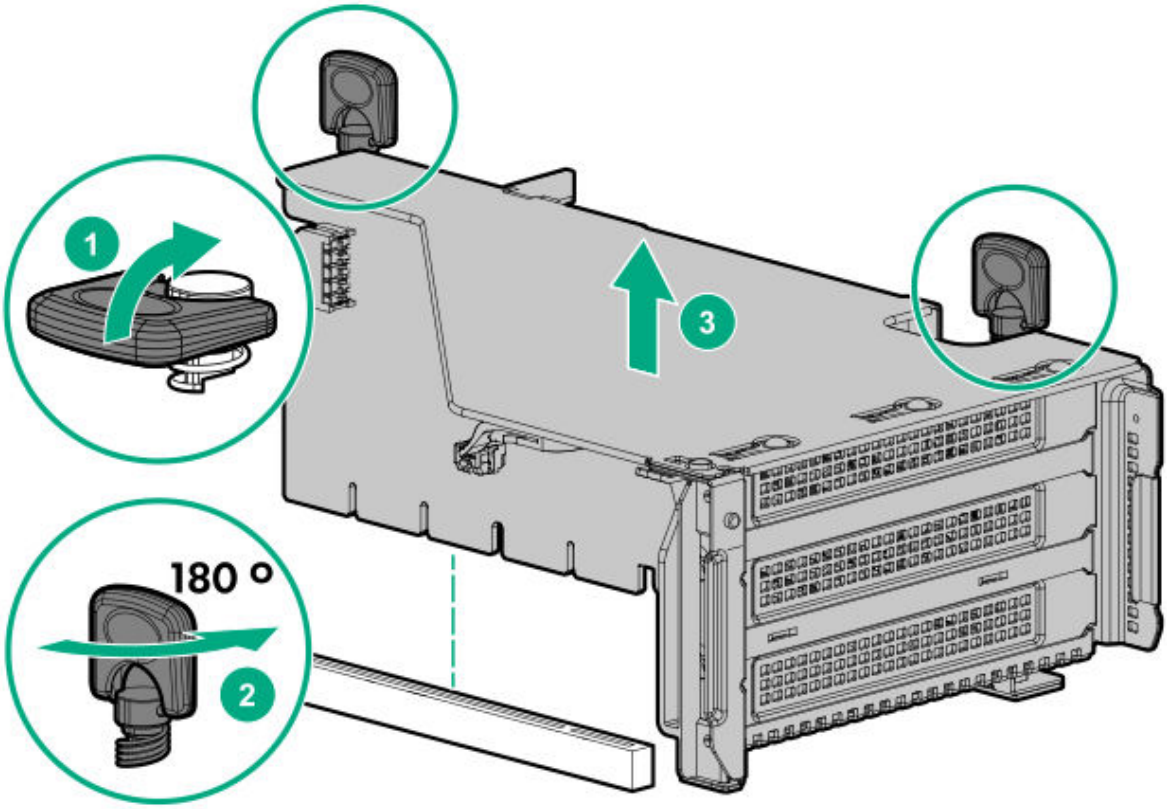

6. Install the Pensando DSP DSC-25 2p SFP28 card into the PCIe slot.

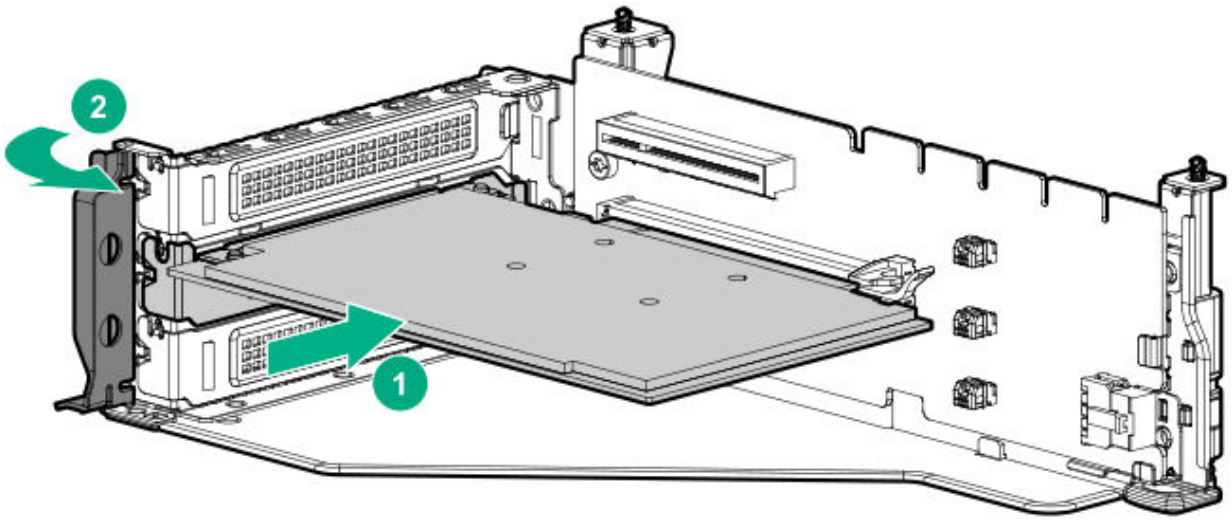

7. Install the PCIe riser cage into the server.

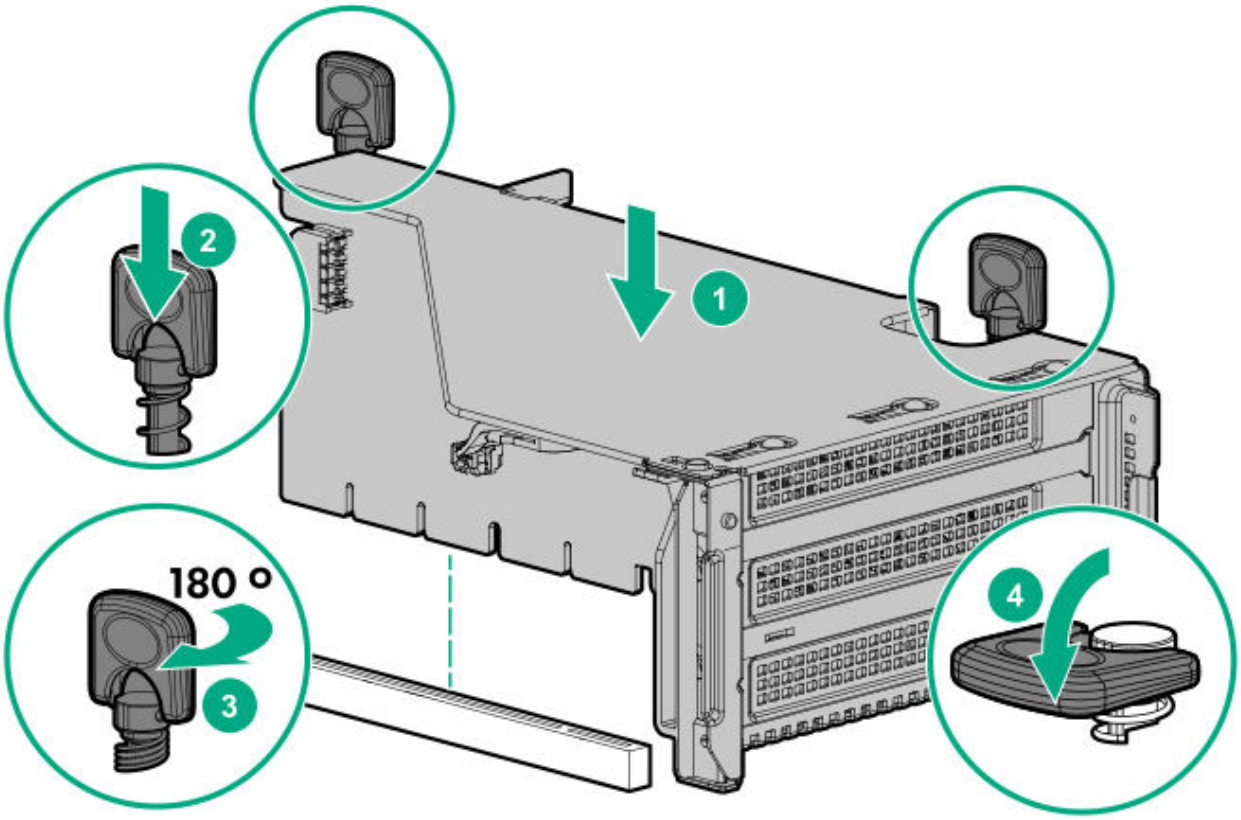

8. Install the access panel.
9. Slide the server into the rack.

10. Connect each power cord to the server.
11. Connect each power cord to the power source.
12. Power up the server.
13. Admit the new DSC-25 card to the Pensando Policy and Services Manager (PSM).

    For more information, see the PSM Enterprise Edition User Guide.

Installing the HPE NS204i-p NVMe OS Boot Device option

Prerequisites

Before beginning installation, ensure that the server is updated with the latest operating system firmware and drivers.

Procedure

Installing drives onto the boot device

1. Remove the liner from the thermal interface pad.

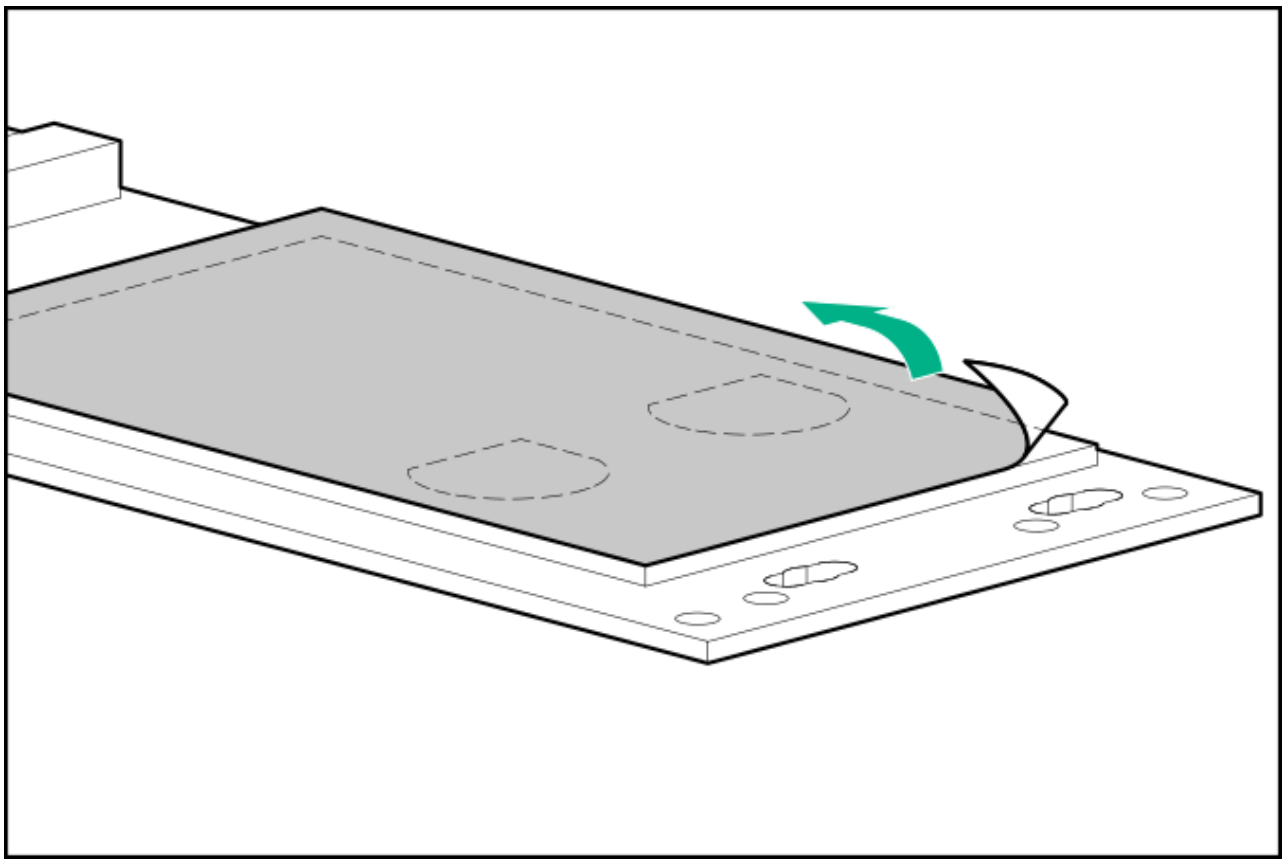

2. Install the drives.

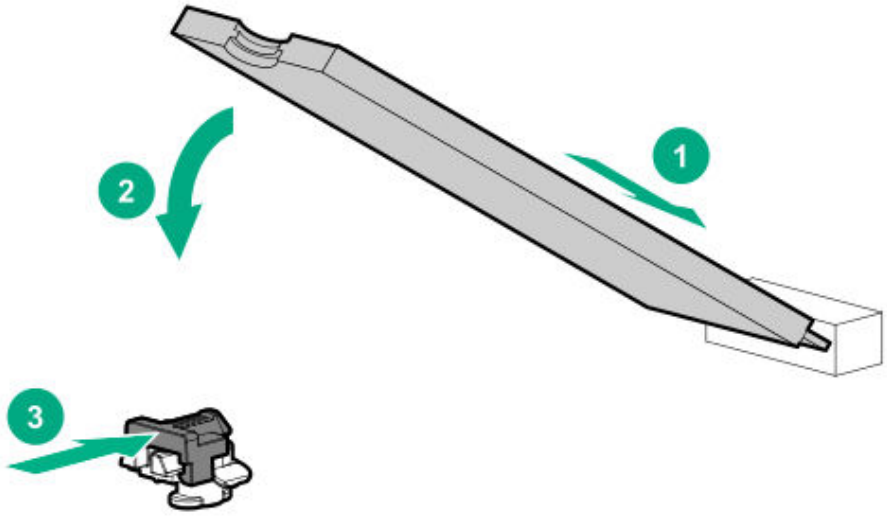

Installing the boot device

3. Power down the system.

4. Do one of the following:
   - Extend the front drive cages out of the chassis.
   - Remove the system from the rack.
   - Remove the compute module from the enclosure.
5. Place the server on a flat, level work surface.
6. Remove the access panel.
7. Select an available PCIe expansion slot that is x8 physical size and x4 electrical.
8. Remove the expansion slot cover.

   Save the retaining screw, if one is present.
9. Install the boot device.

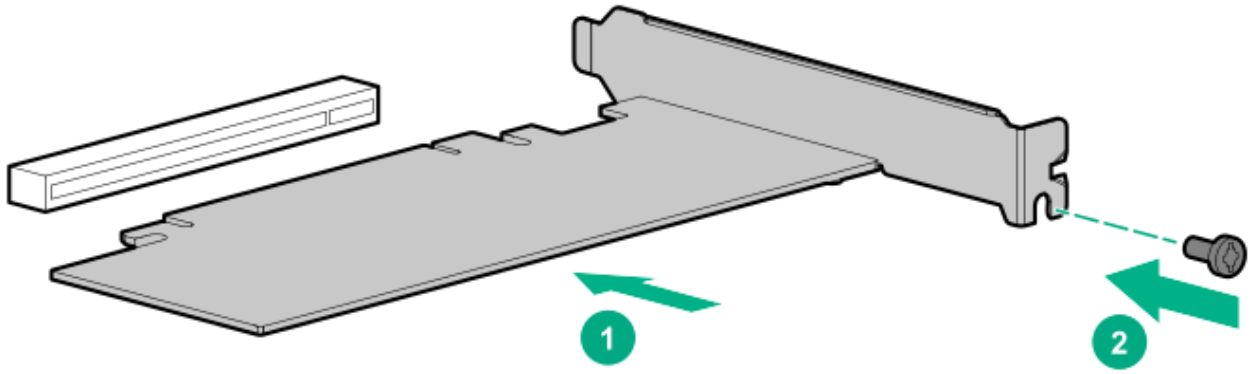

10. Install any components that were removed to access the expansion slot.
11. Install the access panel.
12. Do one of the following:
    - Slide the server into the rack.
    - Install the server into the rack.
13. Power up the server.

Deploying an operating system

14. Deploy a supported operating system to the boot device drive.

    For more information, see the product QuickSpecs (**https://www.hpe.com/info/qs**).

After the OS installation completes, the system automatically copies the operating system to the second, mirrored drive on the boot device.

5. Proceed with normal system setup and operation.

Installing the Systems Insight Display

Prerequisites

Before you perform this procedure, make sure that you have the following items available:

- The components included with the hardware option kit
- T-10 Torx screwdriver

Procedure

1. Power down the server.
2. Remove all power:
   a. Disconnect each power cord from the power source.
   b. Disconnect each power cord from the server.
3. Do one of the following:
   - Extend the server from the rack.
   - Remove the server from the rack.
4. Remove the access panel.
5. Do one of the following:
   - Remove the air baffle.
   - If installed, remove the 4LFF midplane drive cage.
6. Remove the fan cage.
7. Disconnect the power switch module cable from the power switch/SID module connector.

   The SID module cable will be connected to this same connector.
8. Remove the power switch module. Retain the T-10 screw for later use.

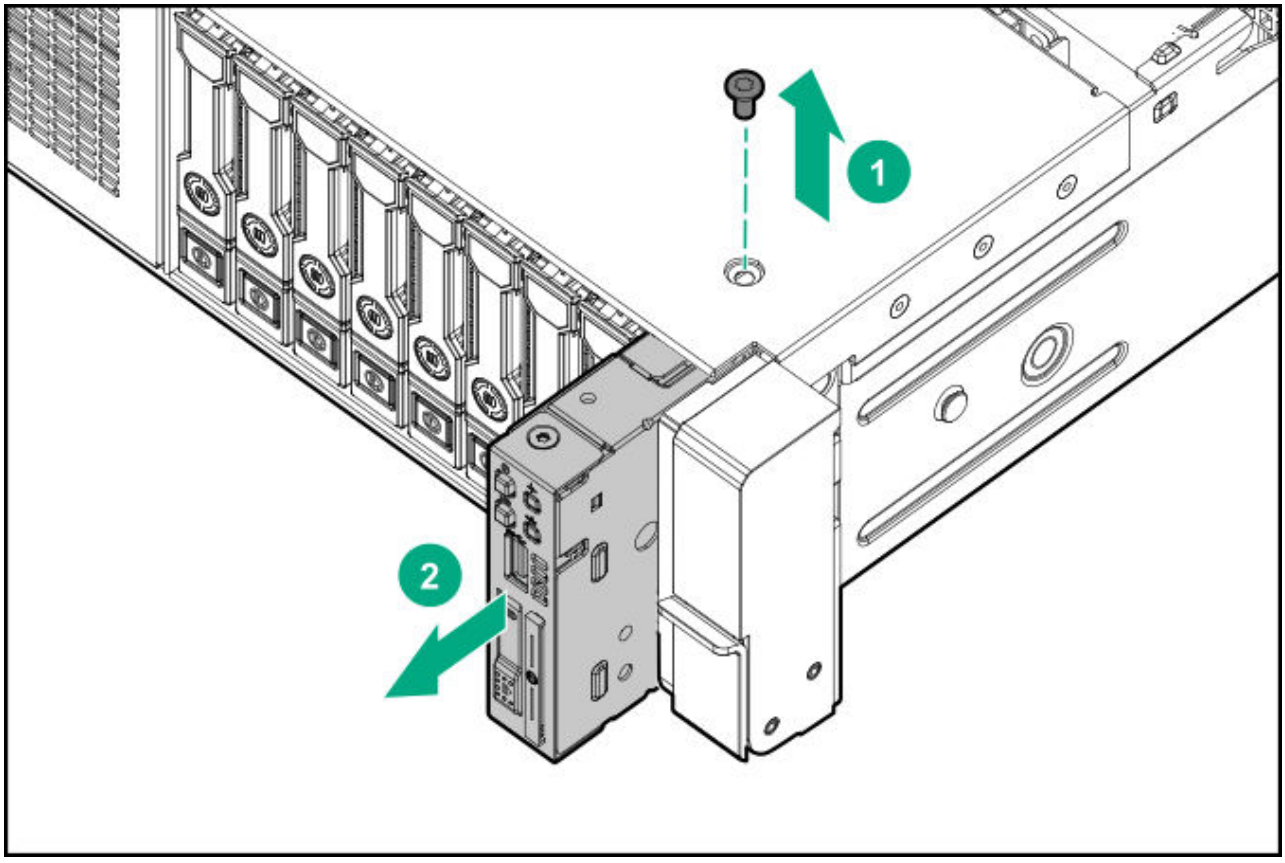

CAUTION: When routing cables, make sure that the cables are not in a position where they can be pinched or crimped.

9. Route the SID cable through the opening in the front of the server, and then install the SID module. Secure the module using the T-10 screw removed in step 8.

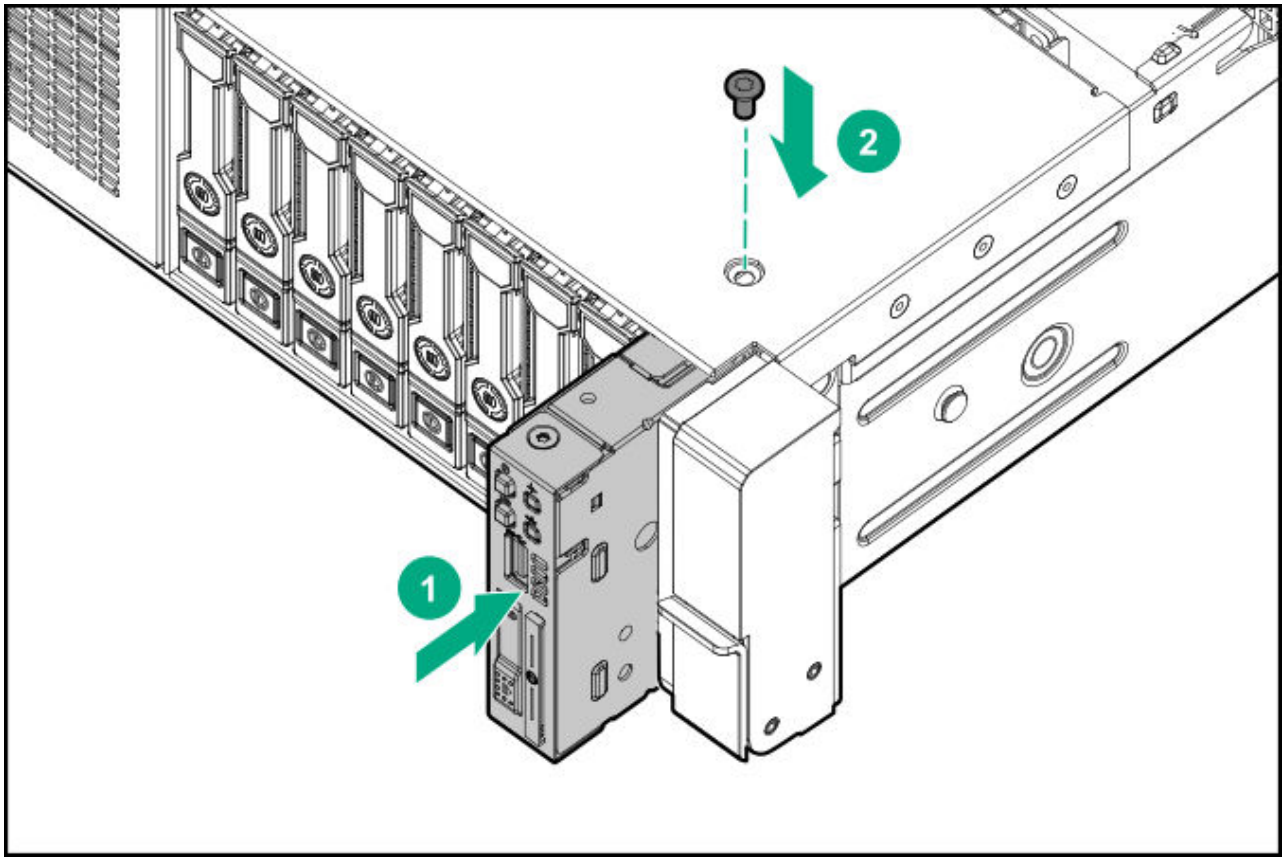

.0. Connect the SID module cable to the power switch/SID module connector.

.1. Install the fan cage.

.2. Do one of the following:

- Install the air baffle.
- Perform steps 9–13 of "Installing a midplane 4 LFF SAS/SATA drive cage".

.3. Install the access panel.

.4. Slide the server into the rack.

.5. Connect each power cord to the server.

.6. Connect each power cord to the power source.

.7. Power up the server.

The installation is complete.

Installing the chassis intrusion detection switch

Prerequisites

Before you perform this procedure, make sure that you have the components included with the hardware option kit.

Procedure

1. Power down the server.
2. Remove all power:
   a. Disconnect each power cord from the power source.
   b. Disconnect each power cord from the server.
3. Do one of the following:
   - Extend the server from the rack.
   - Remove the server from the rack.
4. Remove the access panel.
5. Install the chassis intrusion detection switch.

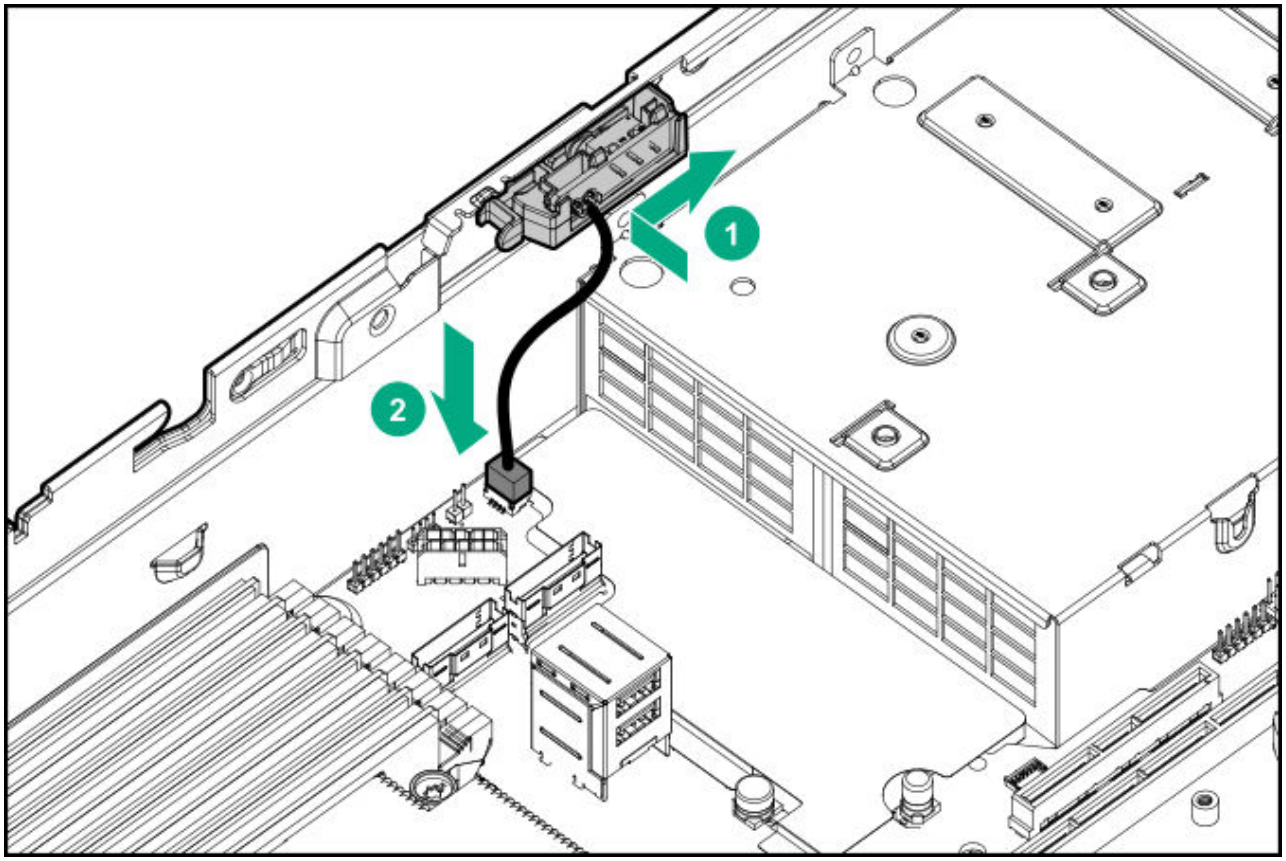

6. Install the access panel.
7. Install the server into the rack.
8. Connect each power cord to the server.
9. Connect each power cord to the power source.
10. Power up the server.

The installation is complete.

Installing a rear serial port interface

If a tertiary riser cage is installed, you can install the serial port into slot 6.

Prerequisites

Before you perform this procedure, make sure that you have the components included with the hardware kit.

Procedure

1. Power down the server.
2. Do one of the following:
   - Disconnect each power cord from the power source.
   - Disconnect each power cord from the server.
3. Do one of the following:
   - Extend the server from the rack.
   - Remove the server from the rack.
4. Remove the access panel.
5. If a secondary or tertiary riser cage is not installed, perform the following steps:
   a. Remove the serial port blank.

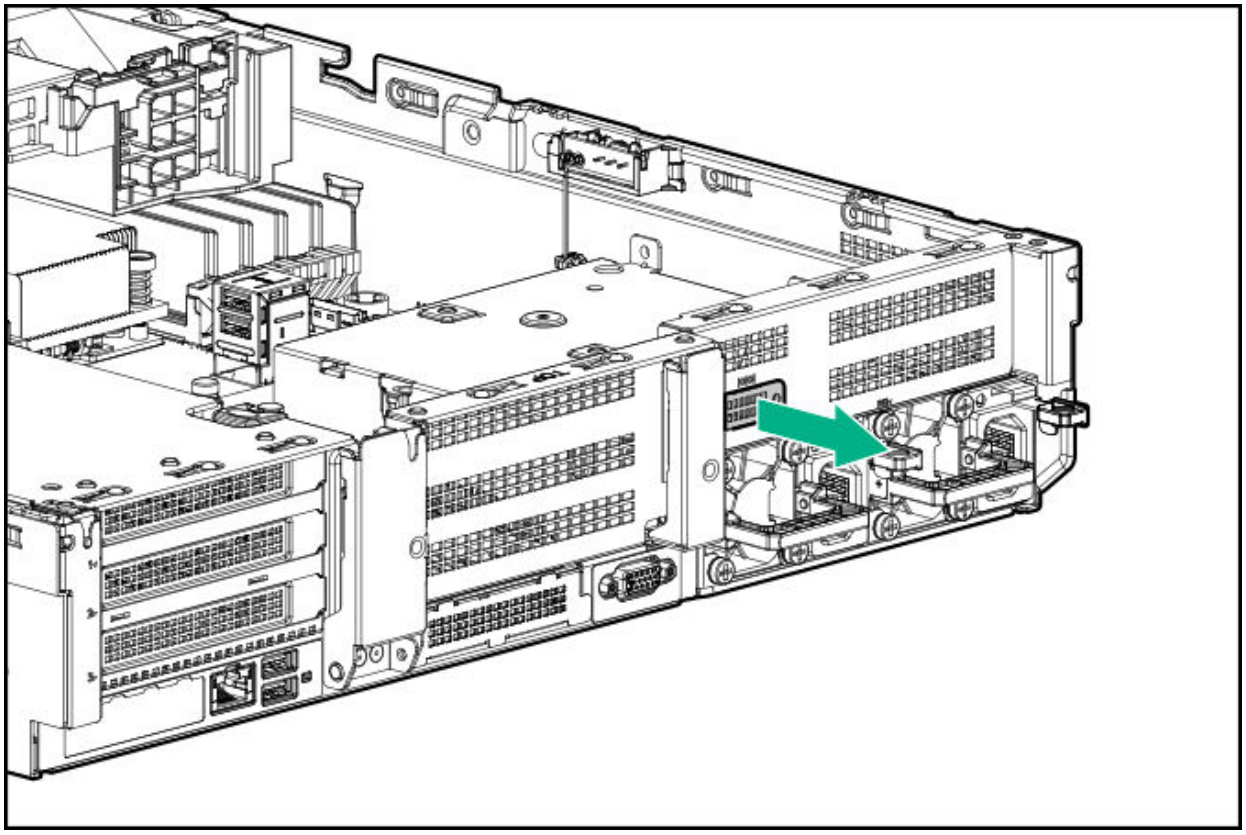

b. Insert the serial cable through the blank port and connect it to the system board.

c. Insert the serial port connector and fasten it to slot 6.

d. Route the cable around the riser cage screws.

e. Remove the double-sided backing and secure the cable to the side of the power supply cage.

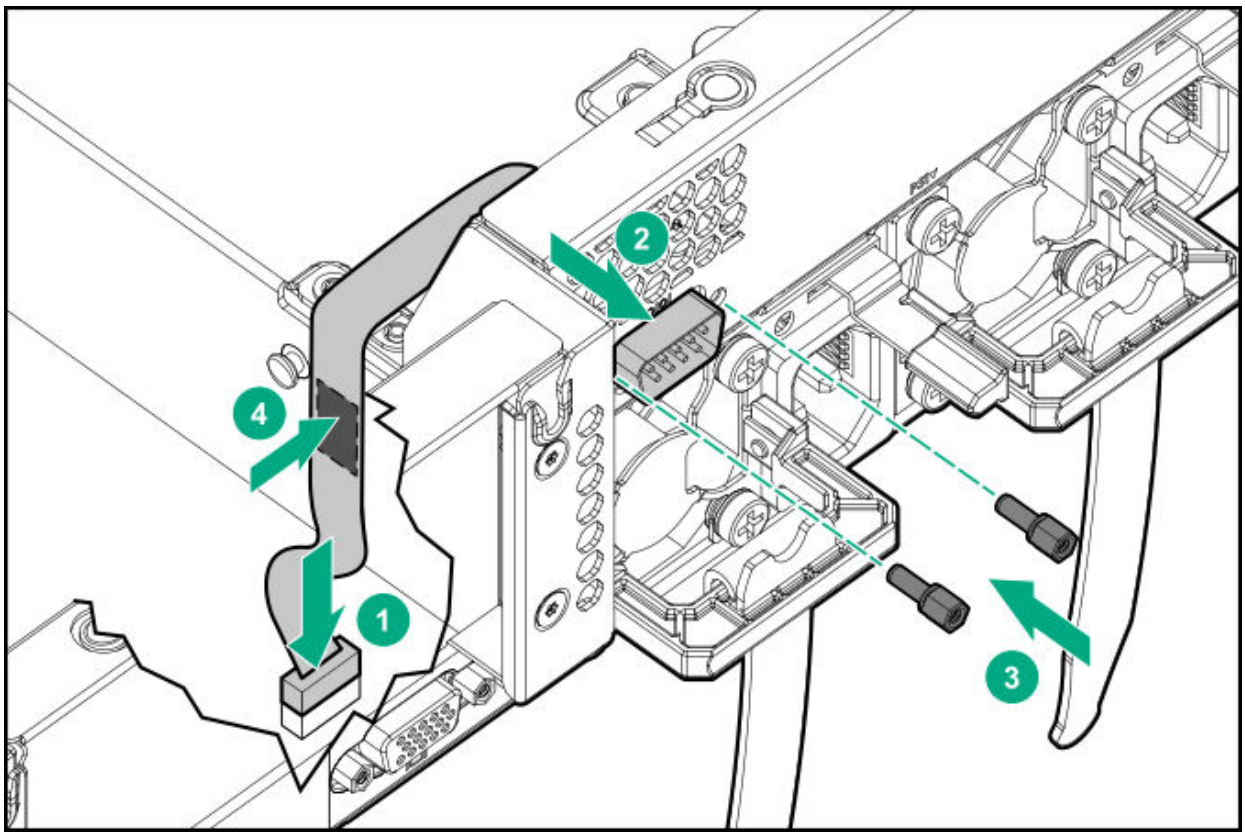

6. Install the access panel.
7. Install the server in the rack.
8. Connect each power cord to the server.
9. Connect each power cord to the power source.
10. Power up the server.

The installation is complete.

HPE Trusted Platform Module 2.0 Gen10 Plus option

Overview

Use these instructions to install and enable an HPE TPM 2.0 Gen10 Plus Kit in a supported server. This option is not supported on Gen10 and earlier servers.

This procedure includes three sections:

1. Installing the Trusted Platform Module board.
2. Enabling the Trusted Platform Module.
3. Retaining the recovery key/password.

HPE TPM 2.0 installation is supported with specific operating system support such as Microsoft Windows Server 2012 R2 and later. For more information about operating system support, see the product QuickSpecs on the Hewlett Packard Enterprise website (**https://www.hpe.com/info/qs**). For more information about Microsoft Windows BitLocker Drive Encryption feature, see the Microsoft website (**https://www.microsoft.com**).

CAUTION: If the TPM is removed from the original server and powered up on a different server, data stored in the TPM including keys will be erased.

IMPORTANT: In UEFI Boot Mode, the can be configured to operate as TPM 2.0 (default) or TPM 1.2 on a supported server. In Legacy Boot Mode, the configuration can be changed between TPM 1.2 and TPM 2.0, but only TPM 1.2 operation is supported.

HPE Trusted Platform Module 2.0 guidelines

CAUTION: Always observe the guidelines in this document. Failure to follow these guidelines can cause hardware damage or halt data access.

Hewlett Packard Enterprise SPECIAL REMINDER: Before enabling TPM functionality on this system, you must ensure that your intended use of TPM complies with relevant local laws, regulations and policies, and approvals or licenses must be obtained if applicable.

For any compliance issues arising from your operation/usage of TPM which violates the above mentioned requirement, you shall bear all the liabilities wholly and solely. Hewlett Packard Enterprise will not be responsible for any related liabilities.

慧与特别提醒：在您启用系统中的TPM功能前，请务必确认您对TPM的使用遵守当地相关法律、法规及政策，并已事先获得所需的一切批准及许可（如适用），因您未获得相应的操作/使用许可而导致的违规问题，皆由您自行承担全部责任，与慧与无涉。

When installing or replacing a TPM, observe the following guidelines:

- Do not remove an installed TPM. Once installed, the TPM becomes a permanent part of the system board.
- When installing or replacing hardware, Hewlett Packard Enterprise service providers cannot enable the TPM or the encryption technology. For security reasons, only the customer can enable these features.
- When returning a system board for service replacement, do not remove the TPM from the system board. When requested, Hewlett Packard Enterprise Service provides a TPM with the spare system board.
- Any attempt to remove the cover of an installed TPM from the system board can damage the TPM cover, the TPM, and the system board.
- If the TPM is removed from the original server and powered up on a different server, all data stored in the TPM including keys will be erased.
- When using BitLocker, always retain the recovery key/password. The recovery key/password is required to complete Recovery Mode after BitLocker detects a possible compromise of system integrity.
- Hewlett Packard Enterprise is not liable for blocked data access caused by improper TPM use. For operating instructions, see the TPM documentation or the encryption technology feature documentation provided by the operating system.

Installing and enabling the HPE TPM 2.0 Gen10 Plus option

Installing the Trusted Platform Module board

Preparing the server for installation

Procedure

1. Observe the following warnings:

WARNING: The front panel Power On/Standby button does not shut off system power. Portions of the power supply and some internal circuitry remain active until AC power is removed.
To reduce the risk of personal injury, electric shock, or damage to the equipment, remove power from the server:

- For rack and tower servers, remove the power cord.
- For server blades and compute modules, remove the server blade or compute module from the enclosure.

WARNING: To reduce the risk of personal injury from hot surfaces, allow the drives and the internal system components to cool before touching them.

2. Update the system ROM.

   Locate and download the latest ROM version from the Hewlett Packard Enterprise Support Center website (**https://www.hpe.com/support/hpesc**). To update the system ROM, follow the instructions on the website.

3. Power down the server.

   a. Shut down the OS as directed by the OS documentation.

   b. To place the server in standby mode, press the Power On/Standby button. When the server enters standby power mode, the system power LED changes to amber.

   c. Disconnect the power cords (rack and tower servers).

4. Do one of the following:

   - Depending on your product, extend or remove the server from the rack.
   - Remove the server from the enclosure.

5. If removed, place the server on a flat, level work surface.
6. Remove the access panel.
7. Remove any options or cables that might prevent access to the TPM connector.
8. Proceed to "Installing the TPM board and cover."

Installing the TPM board and cover

Procedure

1. Observe the following alerts:

   CAUTION: If the TPM is removed from the original server and powered up on a different server, data stored in the TPM including keys will be erased.

   CAUTION: The TPM is keyed to install only in the orientation shown. Any attempt to install the TPM in a different orientation might result in damage to the TPM or system board.

2. Install the TPM board:

   a. Locate the TPM connector on the system board. See the server hood label for the exact location.

   b. Align the TPM board with the key on the connector, and then install the TPM board. To seat the board, press the TPM board firmly into the connector.

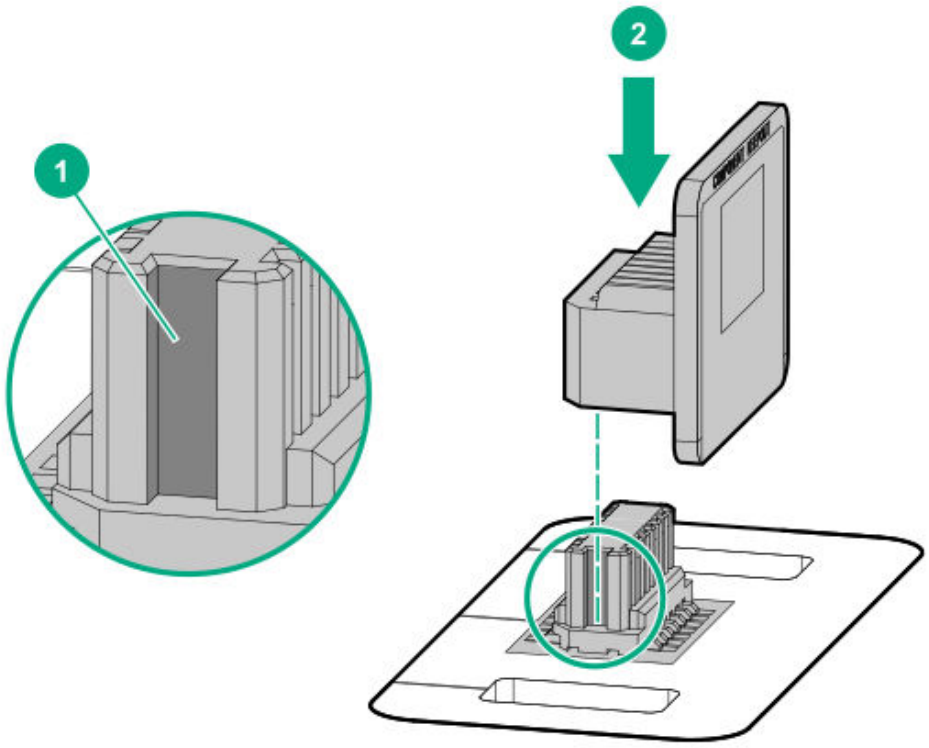

3. Install the TPM cover:

a. Align the pins on the cover with the openings on the system board.

b. Press straight down on the middle of the cover until the alignment pins are seated into the holes.

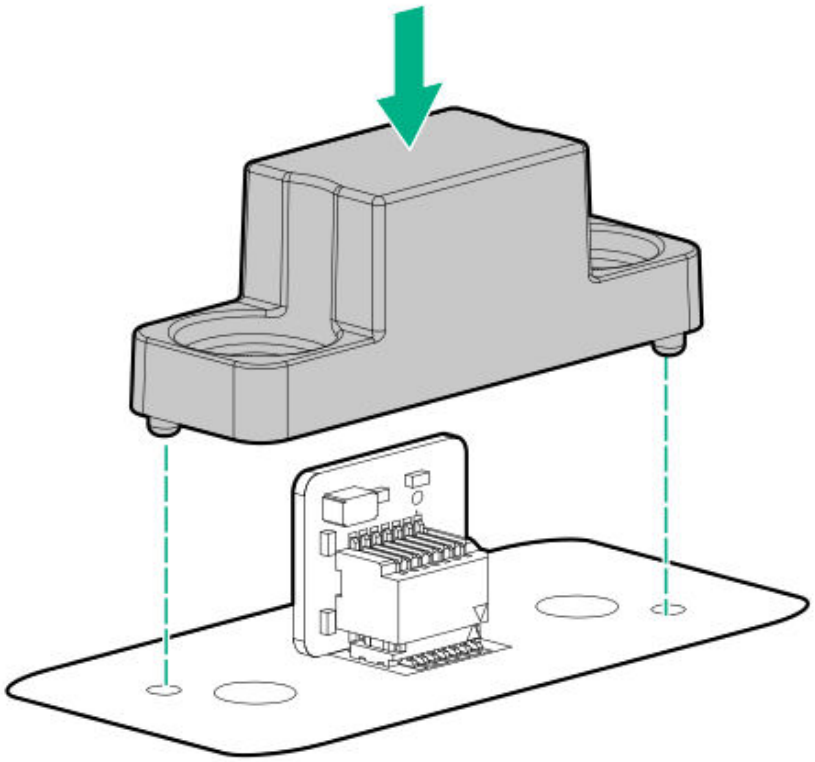

4. Secure the rivets into place by pushing them firmly through the holes in the TPM cover.

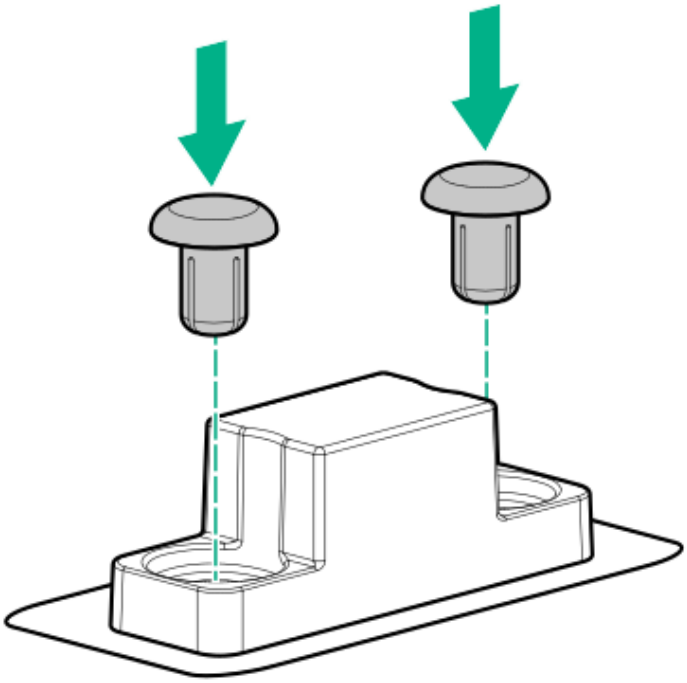

5. Proceed to "Preparing the server for operation."

Preparing the server for operation

Procedure

1. Install any options or cables previously removed to access the TPM connector.
2. Install the access panel.
3. Do one of the following:
   - Slide or install the server into the rack.
   - Install the server into the enclosure.
4. Power up the server.
   a. Connect the power cords (rack and tower servers).
   b. Press the Power On/Standby button.

Enabling the Trusted Platform Module

When enabling the Trusted Platform module, observe the following guidelines:

- By default, the Trusted Platform Module is enabled as TPM 2.0 when the server is powered on after installing it.
- In UEFI Boot Mode, the Trusted Platform Module can be configured to operate as TPM 2.0 (default) or TPM 1.2.
- In Legacy Boot Mode, the Trusted Platform Module configuration can be changed between TPM 1.2 and TPM 2.0 (default), but only TPM 1.2 operation is supported.

Enabling the Trusted Platform Module as TPM 2.0

Procedure

1. During the server startup sequence, press the **F9** key to access **System Utilities**.
2. From the System Utilities screen, select **System Configuration > BIOS/Platform Configuration (RBSU) > Server Security > Trusted Platform Module options**.
3. Verify the following:
   - "Current TPM Type" is set to **TPM 2.0**.
   - "Current TPM State" is set to **Present and Enabled**.
   - "TPM Visibility" is set to **Visible**.
4. If changes were made in the previous step, press the **F10** key to save your selection.
5. If **F10** was pressed in the previous step, do one of the following:
   - If in graphical mode, click **Yes**.
   - If in text mode, press the **Y** key.
6. Press the **ESC** key to exit System Utilities.
7. If changes were made and saved, the server prompts for reboot request. Press the **Enter** key to confirm reboot.

If the following actions were performed, the server reboots a second time without user input. During this reboot, the TPM setting becomes effective.

- Changing from TPM 1.2 and TPM 2.0
- Changing TPM bus from FIFO to CRB
- Enabling or disabling TPM
- Clearing the TPM

8. Enable TPM functionality in the OS, such as Microsoft Windows BitLocker or measured boot.

   For more information, see the **Microsoft website**.

Enabling the Trusted Platform Module as TPM 1.2

Procedure

1. During the server startup sequence, press the **F9** key to access **System Utilities**.
2. From the System Utilities screen select **System Configuration > BIOS/Platform Configuration (RBSU) > Server Security > Trusted Platform Module options**.
3. Change the "TPM Mode Switch Operation" to **TPM 1.2**.
4. Verify that "TPM Visibility" is set to **Visible**.
5. Press the **F10** key to save your selection.
6. When prompted to save the change in System Utilities, do one of the following:
   - If in graphical mode, click **Yes**.
   - If in text mode, press the **Y** key.
7. Press the **ESC** key to exit System Utilities.

   The server reboots a second time without user input. During this reboot, the TPM setting becomes effective.

8. Enable TPM functionality in the OS, such as Microsoft Windows BitLocker or measured boot.

   For more information, see the **Microsoft website**.

Retaining the BitLocker recovery key/password

The recovery key/password is generated during BitLocker setup, and can be saved and printed after BitLocker is enabled. When using BitLocker, always retain the recovery key/password. The recovery key/password is required to enter Recovery Mode after BitLocker detects a possible compromise of system integrity.

To help ensure maximum security, observe the following guidelines when retaining the recovery key/password:

- Always store the recovery key/password in multiple locations.
- Always store copies of the recovery key/password away from the server.
- Do not save the recovery key/password on the encrypted hard drive.

Cabling

HPE ProLiant Gen10 Plus DL Servers Storage Cabling Guidelines

When installing cables, observe the following:

- All ports are labeled:
  - System board ports
  - Controller ports
  - 12G SAS Expander ports
- Most data cables have labels near each connector with destination port information.
- Some data cables are pre-bent. Do not unbend or manipulate the cables.
- Before connecting a cable to a port, lay the cable in place to verify the length of the cable.
- When routing cables from the front to the rear of the server, use the cable channels on either side of the chassis.

Cabling diagrams

Use the following tables to find cabling information and diagrams. For additional cabling configurations, see **https://www.hpe.com/info/proliantcablingmatrix**.

Table 3: SAS/SATA options

Option kit	Cable part number	From	To
Optical disk drive, Slim SATA cable	756914-001	Optical disk drive	System board
2 SFF Slim SAS SAS/SATA Universal Media Bay	P22760-001	Universal Media Bay	System board
2 SFF Slim SAS x8 SAS/SATA Universal Media Bay	P22761-001	2 SFF Side by Side backplane	System board

Table 4: LFF/SFF x4 SAS Cable options

Option kit	Cable part number	From	To
x8 Mini SAS cable to x8 Mini SAS cable (x4)	747568-001	8 SFF SAS/SATA option, box 3	HPE Smart Array P408i-a or P816i-a Gen10 Controller, ports 1 and 2
x8 Mini SAS cable to x8 Mini SAS cable (x4)	747568-001	8 SFF SAS/SATA option, box 3	HPE 12GB SAS Expander Card, ports 7 and 8 in the primary riser cage
x8 Mini SAS cable to x8 Mini SAS cable (x4)	776402-001	8 SFF SAS/SATA option, box 1 or 2	HPE Smart Array P816i-a Gen10 Controller, ports 3 and 4
x8 Mini SAS cable to x8 Mini SAS cable (x4)	776402-001	8 SFF SAS/SATA option, box 1 or 2	HPE 12GB SAS Expander Card, ports 3 and 4 in the primary riser cage
x8 Mini SAS cable to x8 Mini SAS cable (x4)	P22897-001	HPE Smart Array P408i-a or P816i-a Gen10 Controller, ports 1 and 2	HPE 12GB SAS Expander Card, ports 1 and 2 in the primary riser cage

Option kit	Cable part number	From	To
Mini SAS straight to Mini SAS straight cable	P22898-001	HPE Smart Array P408i-a or P816i-a Gen10 Controller, ports 1 and 2	HPE 12GB SAS Expander Card, ports 1 and 2 in the tertiary riser cage
Mini SAS straight to Mini SAS side exit cable	P20850-001	8 SFF SAS/SATA option – boxes 2 and 3	HPE 12GB SAS Expander Card, ports 5 through 8 in the primary riser cage
x4 Mini SAS cable	869827-001	4 LFF SAS/SATA drive backplane – boxes 1, 2, and 3	HPE Smart Array P816i-a Gen10 Controller, ports 1, 2, and 3
x4 Mini SAS cable	869827-001	4 LFF SAS/SATA drive backplane – boxes 1, 2, and 3	HPE 12GB SAS Expander Card, ports 3, 4, and 5 in the secondary or tertiary riser cages
x4 Mini SAS cable	P22899-001	4 LFF SAS/SATA drive backplane – boxes 1, 2, and 3	HPE Smart Array P816i-a Gen10 Controller, ports 1, 2, and 3
x4 Mini SAS cable	P22899-001	4 LFF SAS/SATA drive backplane – boxes 1, 2, and 3	HPE 12GB SAS Expander Card, ports 3, 4, and 5 in the primary riser cage
x4 Mini SAS cable to x4 Mini SAS cable	869823-001	2 LFF stacked backplane	HPE 12GB SAS Expander Card, primary riser cage

Table 5: Power Switch, Display, Serial, and USB port cable options

Option kit	Cable part number	From	To
Power switch, USB, and thermal sensor cable	P14312-001	SFF Front I/O module	Front power/USB 3.1 Gen 1 connector
Power switch, USB, and thermal sensor cable	P14312-001	8 LFF Front I/O module	Front power/USB 3.1 Gen 1 connector
Systems Insight Display, power switch board, USB, and thermal sensor cable	P14313-001	System Insight Display	Front power/USB 3.1 Gen 1 connector
Power switch and thermal sensor cable	P16076-001	Bezel ear switch module	Front power/USB 3.1 Gen 1 connector
Display port and USB cable	P14314-001	Universal Media Bay	Display port/USB connector

Option kit	Cable part number	From	To
Display port cable	869808-001	8 LFF Front I/O module	Display port/USB connector
Universal Media Bay external USB cable	P14315-001	Universal Media Bay, box 1	Internal dual USB port
Rear serial port cable	P14317-001	Rear serial interface	Serial port connector

Table 6: Straight, Direct Connect, and Stand up card NVMe Cable options (not shown)

Option kit	Cable part number	From	To
NVMe Direct Connect Cables	P14328-001	2 SFF Stacked U.3 backplane, box 1	Tertiary riser, x16 PCIe adapter
NVMe Direct Connect Cables	P14329-001	HPE DL38X Gen10 Plus AROC to NVMe Adapter, port 7A	Primary riser

Table 7: Splitter, Direct Connect Riser NVMe Cable options (not shown)

Option kit	Cable part number	From	To
NVMe Direct Connect Cables	P14334-001	2x4 SFF Premium U.3 Midtray, ports 1-4	Secondary riser, x16 or x32 PCIe adapter

Table 8: Fan out cable options – Slim SAS to x4 SAS

Option kit	Cable part number	From	To
Slim SAS x8 (1) to Mini SAS x4 (2)	P20849-001	4 LFF SAS/SATA backplane, box 3	4 LFF midtray backplane and NVMe port 1C on the system board
Slim SAS x8 (1) to Mini SAS x4 (2)	P20849-001	4 LFF SAS/SATA backplane, box 3	4 LFF midtray backplane and HPE Smart Array Ge

Option kit	Cable part number	From	To
			n10 Plus Tri-Mode AROC Controller
Slim SAS x8 (1) to Mini SAS x4 (2)	P20848-001	4 LFF SAS/SATA backplane, box 1-2	NVMe port 8A on the system board
Slim SAS x8 (1) to Mini SAS x4 (2)	P20848-001	4 LFF SAS/SATA backplane, box 1-2	Primary riser, x16 PCIe adapter

Table 9: Straight cable options – OCP Pass Through NVMe Cables (not shown)

Option kit	Cable part number	From	To
OCP Pass Through NVMe Cables (for processor 1)	P14318-001	NVMe port 8A on the system board	OCP pass through
OCP Pass Through NVMe Cables (for processor 2)	P16075-001	NVMe port 1C on the system board	Low profile Slim SAS OCP pass through

Table 10: Power cable options

Option kit	Cable part number	From	To
SFF power cable	869825-001	8 SFF Premium U.3 backplane and 8 SFF SAS / SATA, boxes 1, 2, and 3	Drive backplane power connectors (all 3)
LFF power cable	P14341-001	4 LFF low profile SAS /SATA drive backplane, box 1	Drive backplane power connector, box 1
LFF power cable	P14342-001	4 LFF low profile SAS /SATA drive backplane, box 2 or 3	Drive backplane power connector, box 2 or 3
LFF power cable	P14343-001	4 LFF low profile SAS /SATA drive backplane, box 2	2 SFF Side by Side backplane
Rear 2 SFF riser power cable	P14345-001	Riser board power connector, primary or secondary riser cage	Drive backplane power connector, 2 SFF drive option backplane, primary or secondary riser cage

Option kit	Cable part number	From	To
Midtray, 2 SFF, and 2 LFF power cable	P14346-001	Drive backplane power connector	Midtray, 2 SFF riser backplane, and 2 LFF riser backplane in primary, secondary, and tertiary riser

Table 11: GPU power (not shown)

Option kit	Cable part number	From	To
HPE GPU 8px6p Y-Power Cable Kit	869805-001	GPU	Riser
HPE GPU 8p Keyed GPU Cable Kit	869820-001	GPU	Riser
Standard GPU power cable	P03851-001	GPU	Riser

Table 12: HPE ProLiant server cable bundle options

Option kit	Cable part number	From	To
8 NVMe Balanced Direct Solution (P19358-B21)			
NVMe Direct Connect Cable	P22345-001	8 SFF Premium U.3 backplane, Box 2, ports 1 and 2	NVMe ports 1A and 2A on the system board (processor 1)
NVMe Direct Connect Cable	P22346-001	8 SFF Premium U.3 backplane, Box 2, ports 3 and 4	NVMe ports 1B and 2B on the system board (processor 2)
8 NVMe Direct Single Processor Solution (P22750-B21)			
NVMe Direct Connect Cable	P22345-001	8 SFF Premium U.3 backplane, Box 2, ports 1 and 2	NVMe ports 1A and 2A on the system board (processor 1)

Option kit	Cable part number	From	To
NVMe Direct Connect Cable	P22348-001	8 SFF Premium U.3 backplane, Box 2, ports 3	HPE DL38X Gen10 Plus AROC to NVMe Adapter, port 7A
NVMe Direct Connect Cable	P22347-001	8 SFF Premium U.3 backplane, Box 2, ports 4	NVMe port 8A on the system board
16 NVMe Balanced Direct Solution (P22751-B21)			
NVMe Direct Connect Cable	P22345-001	8 SFF Premium U.3 backplane, Box 1, ports 1 and 2	NVMe ports 1B and 2B on the system board (processor 2)
NVMe Direct Connect Cable	P22349-001	8 SFF Premium U.3 backplane, Box 1, ports 3 and 4	NVMe ports 1C and 2C on the system board (processor 2)
NVMe Direct Connect Cable	P22345-001	8 SFF Premium U.3 backplane, Box 2, ports 1 and 2	NVMe ports 1A and 2A on the system board (processor 1)
NVMe Direct Connect Cable	P22347-001	8 SFF Premium U.3 backplane, Box 2, port 3	HPE DL38X Gen10 Plus AROC to NVMe Adapter, port 7A
NVMe Direct Connect Cable	P22348-001	8 SFF Premium U.3 backplane, Box 2, port 4	NVMe port 8A on the system board
24 NVMe Balanced Direct Solution (P19359-B21)			
NVMe Direct Connect Cable	P22904-001	8 SFF Premium U.3 backplane, Box 1, 2, or 3, port 2	Primary or secondary riser, x16 or x32 PCIe adapter
NVMe Direct Connect Cable	P22349-001	8 SFF Premium U.3 backplane, Box 1, ports 3 and 4	NVMe ports 1C and 2C on the system board (processor 2)
NVMe Direct Connect Cable	P22345-001	8 SFF Premium U.3 backplane, Box 2, ports 1 and 2	NVMe ports 1A and 2A on the system board (processor 1)
NVMe Direct Connect Cable	P22346-001	8 SFF Premium U.3 backplane, Box 2, ports 3 and 4	NVMe ports 1B and 2B on the system board (processor 2)
NVMe Direct Connect Cable	P22347-001	8 SFF Premium U.3 backplane, Box 1, port 1	HPE Smart Array P408i-a or P816i-a Gen10 Controller, port 7A
NVMe Direct Connect Cable	P22348-001	8 SFF Premium U.3 backplane, Box 1, port 2	NVMe port 8A on the system board

Option kit	Cable part number	From	To
NVMe Direct Connect Cable	P22903-001	8 SFF Premium U.3 backplane, Box 3, port 3 and 4	Primary riser, x16 or x32 PCIe adapter

Cable routing: 8 LFF front I/O module to SATA Port

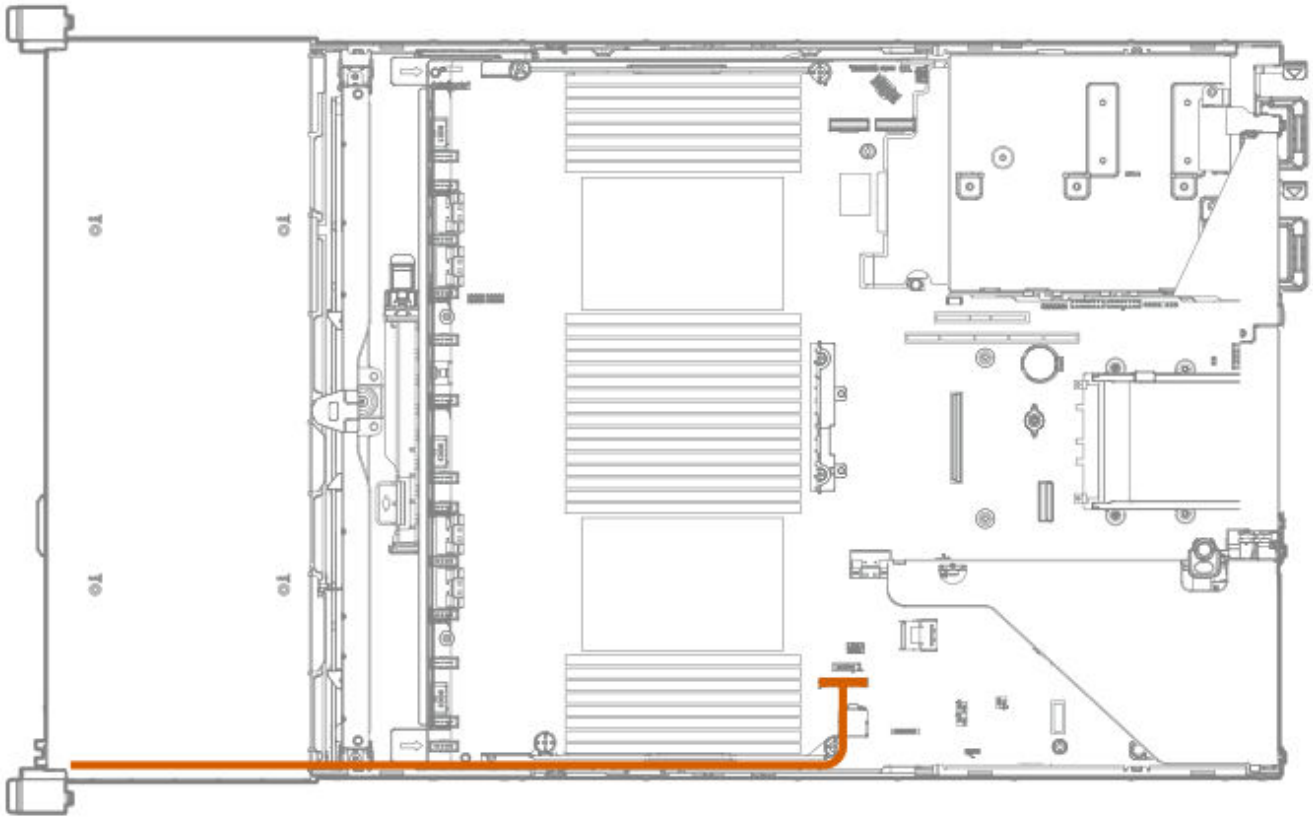

Cable routing: Universal Media Bay to SATA Port

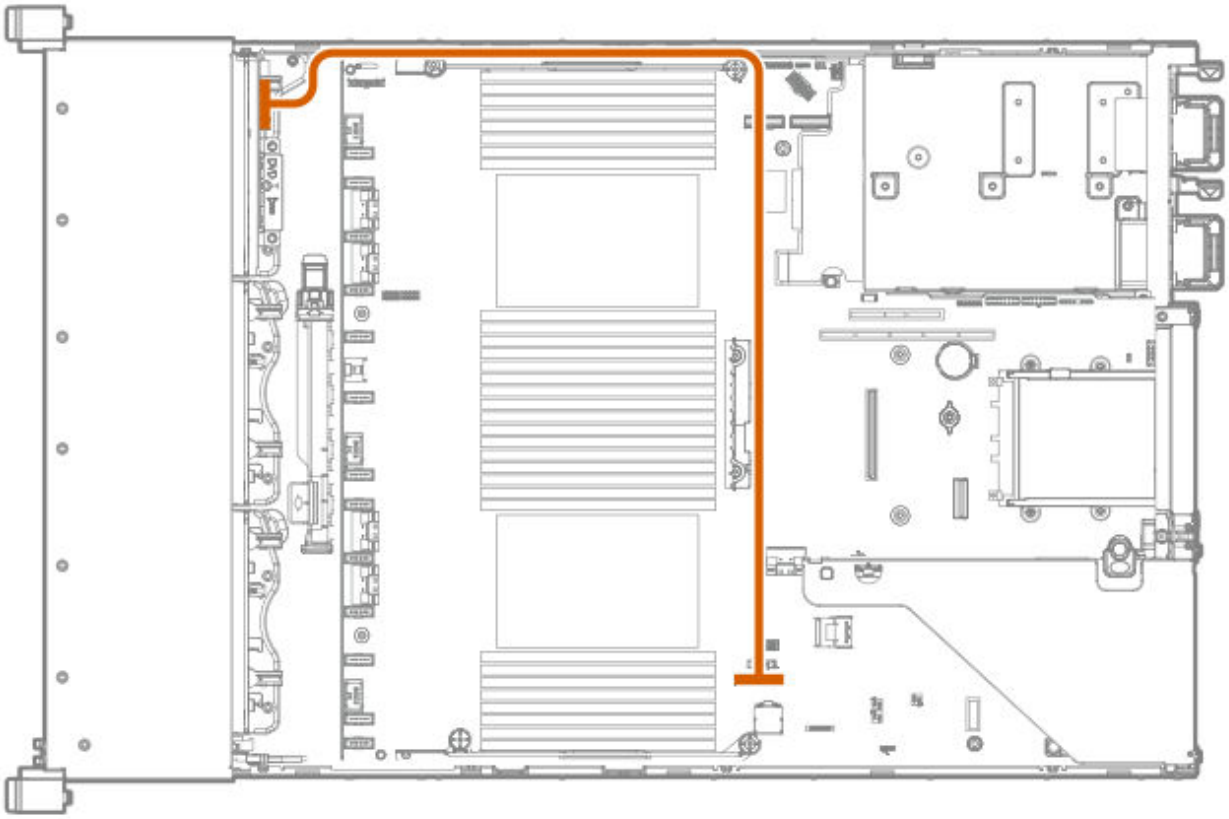

Cable routing: 2 SFF Slim SAS Universal Media Bay in box 1 to system board

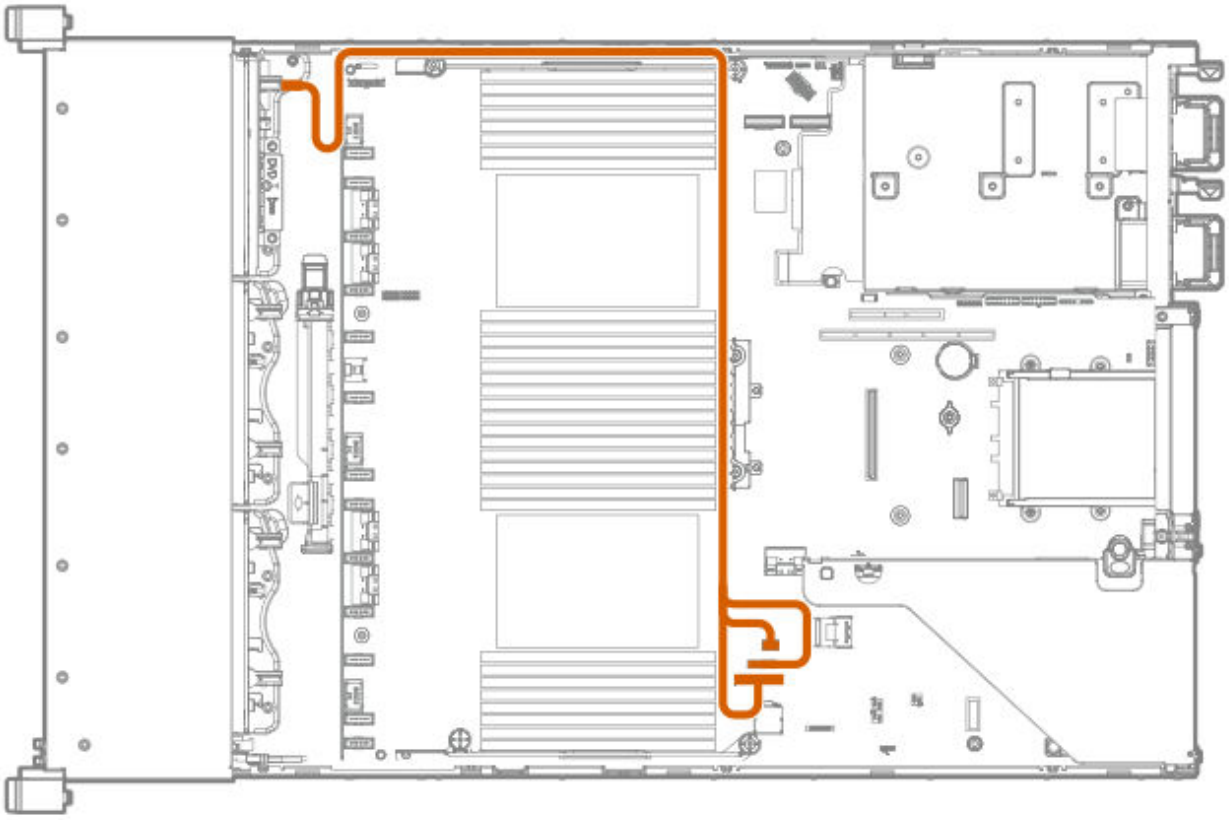

Cable routing: 2 SFF side by side SATA to system board

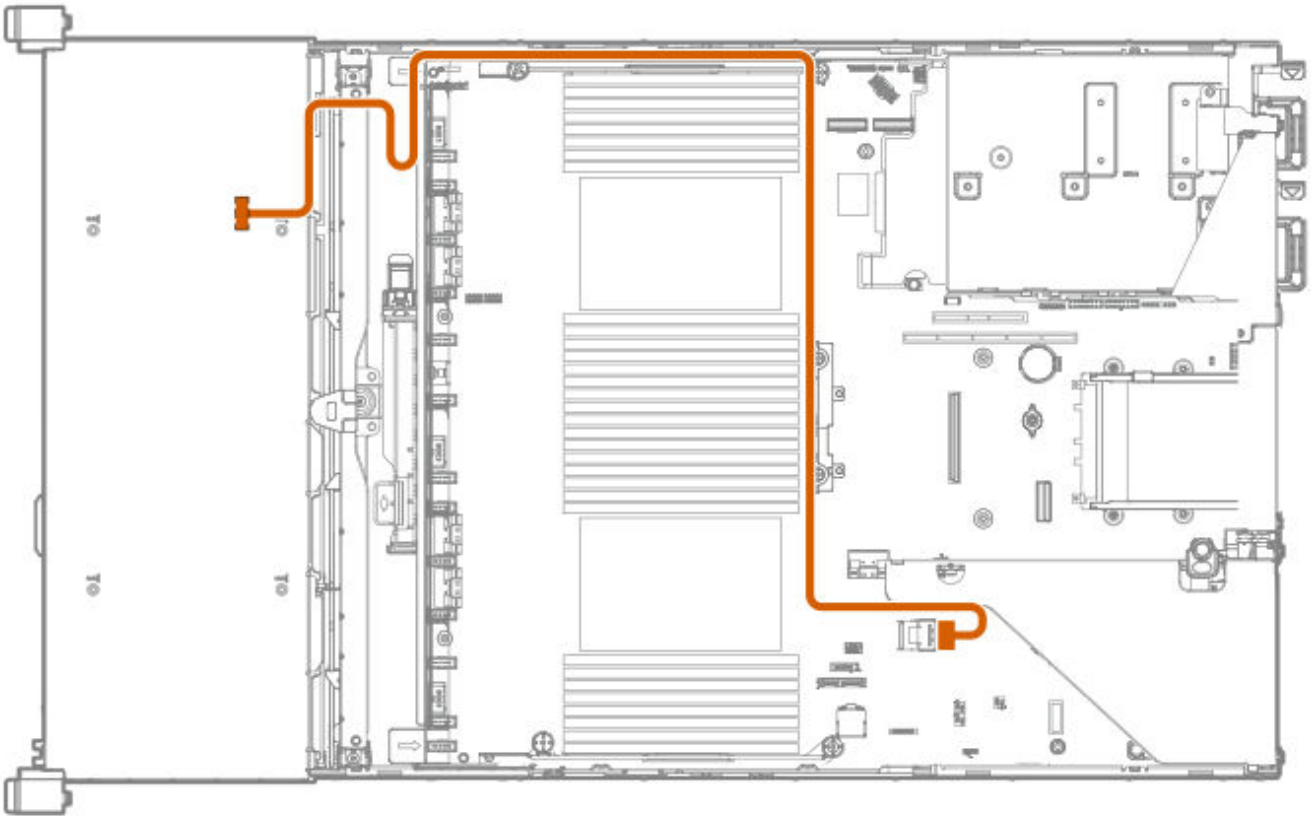

Cable routing: Front 8 SFF drive options (box 3 to HPE Smart Array E208i-a SR Gen10 Controller, ports 1-2)

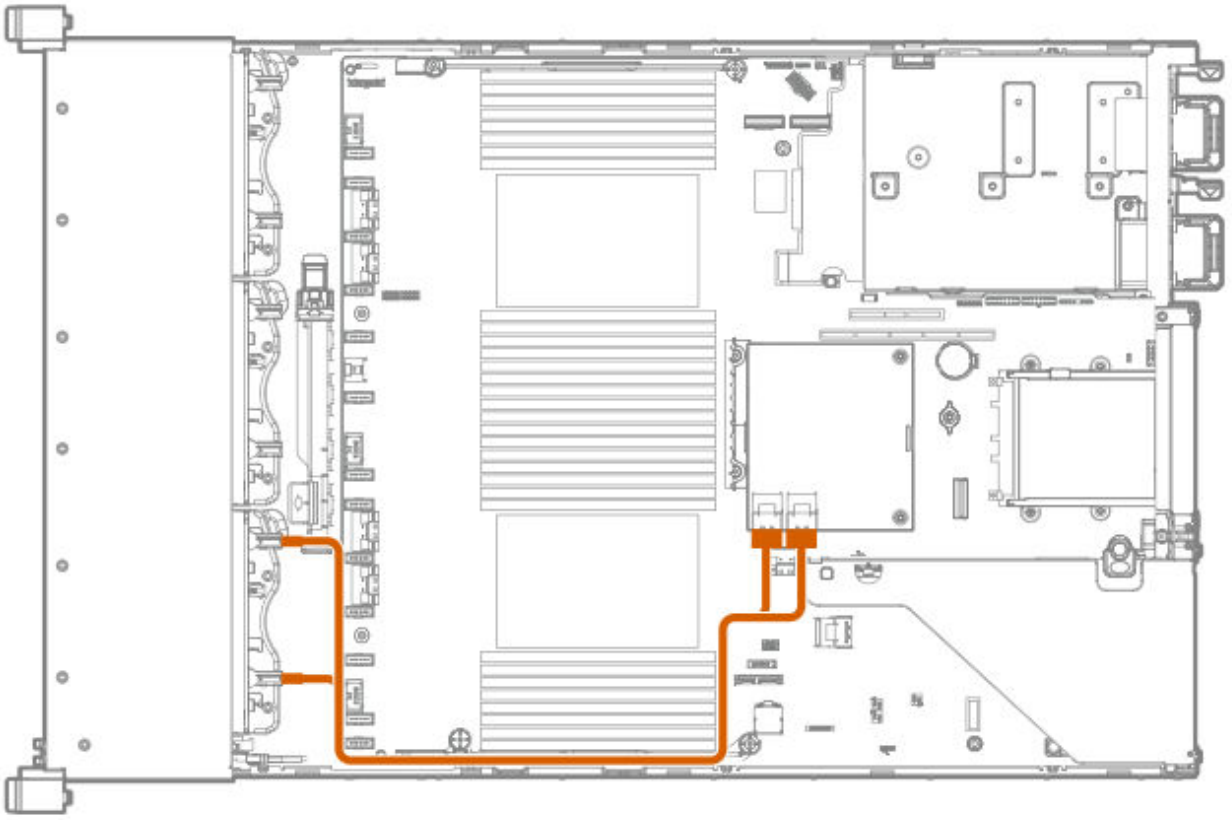

Cable routing: Front 8 SFF drive options (box 1 to HPE Smart Array P816i-a SR Controller, ports 3-4)

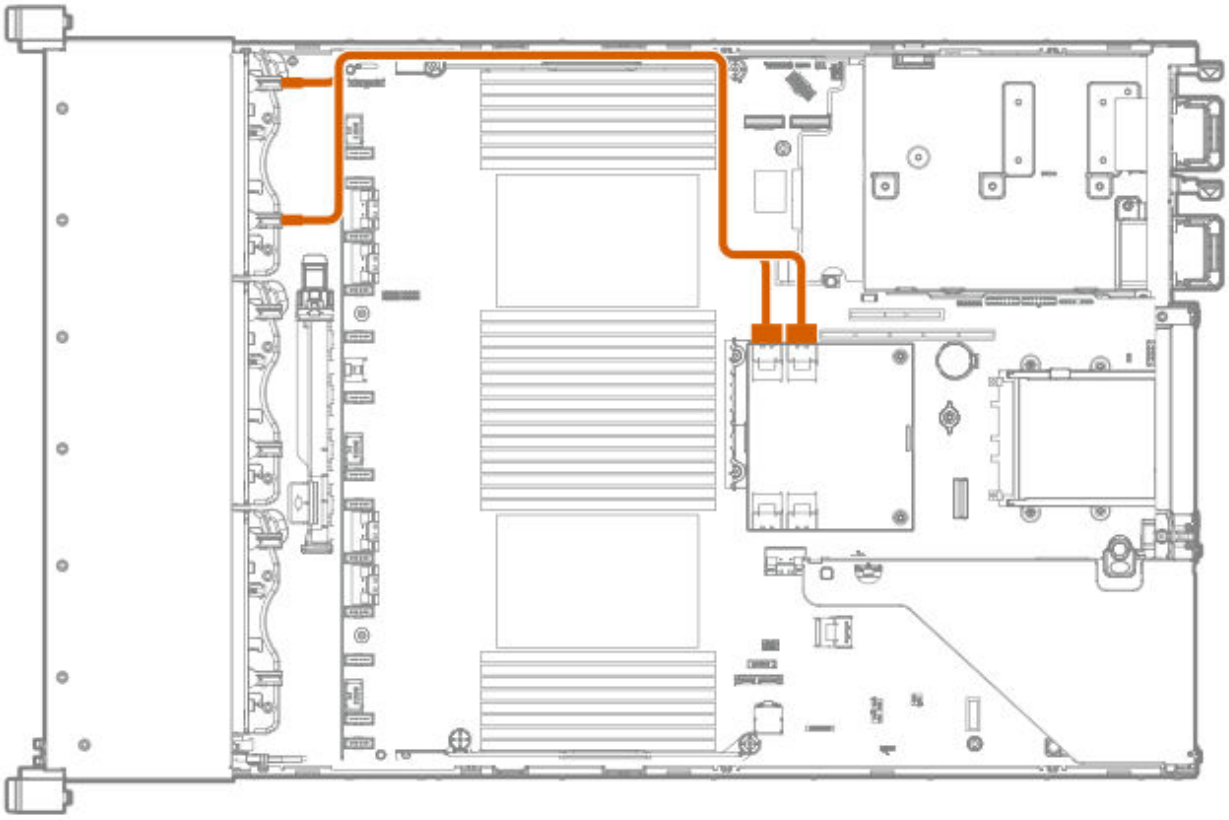

Cable routing: 24 SFF SAS drive options (box 1, box 2, and box 3 to SAS expander)

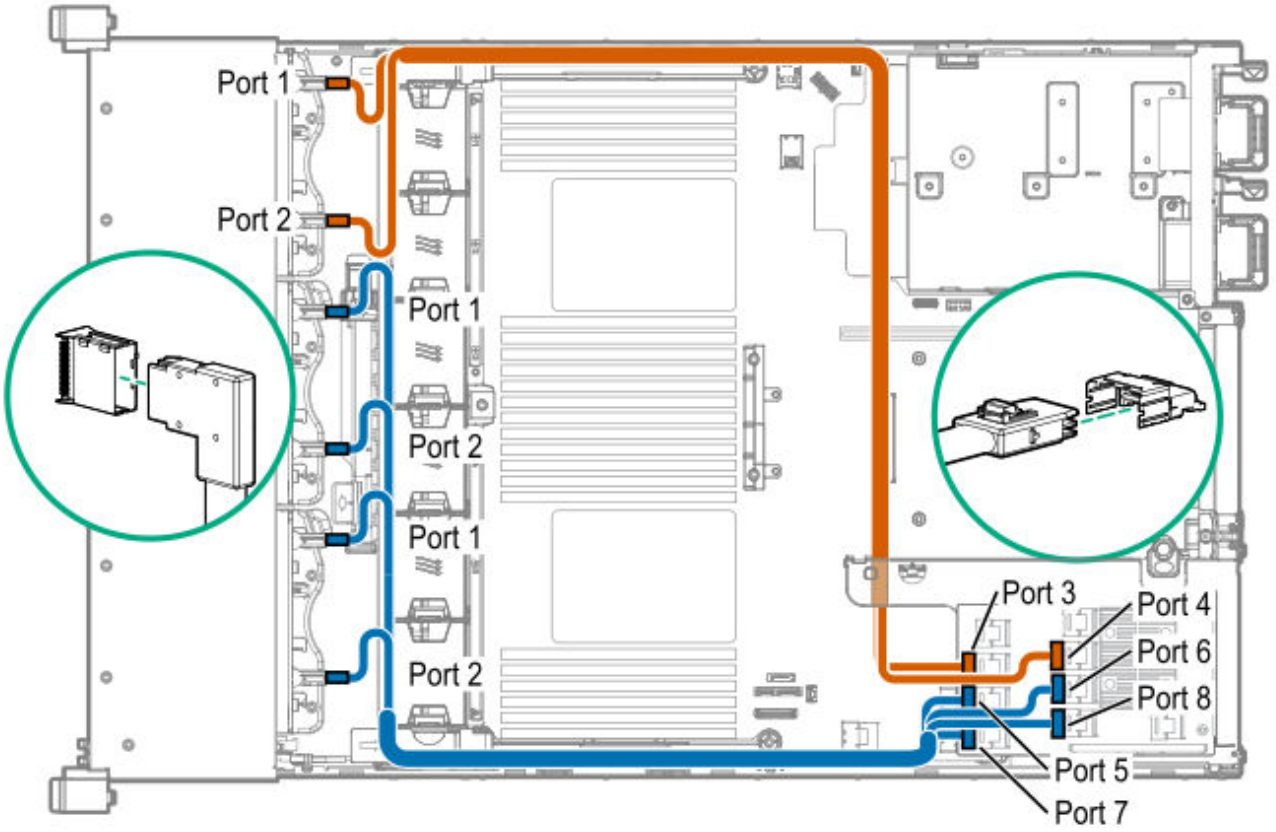

Cable routing: 24 SFF drive options (box 1, box 2, and box 3 to SAS expander card and HPE Smart Array P816i-a SR Gen10 Controller, ports 1-2)

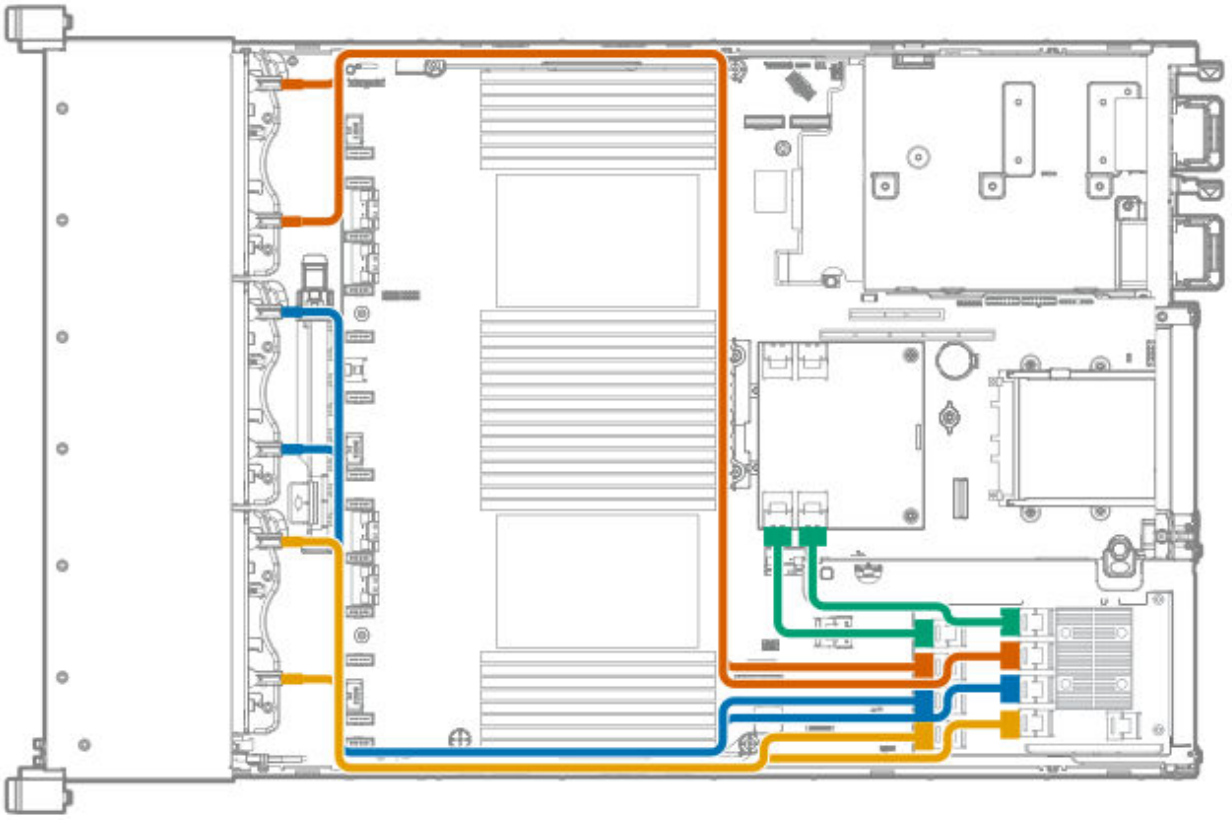

Cable routing: 8 NVMe Balanced Direct Solution

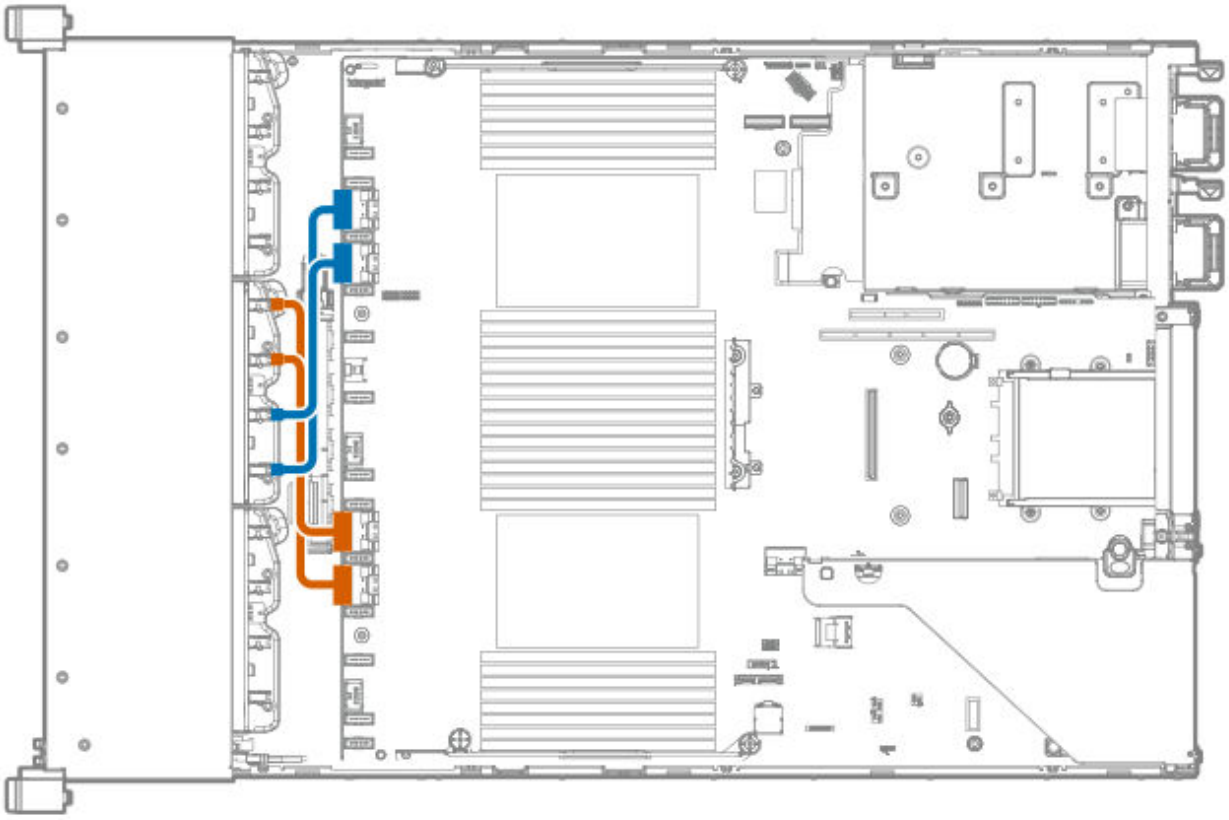

Cable routing: 8 NVMe Direct Single Processor Solution

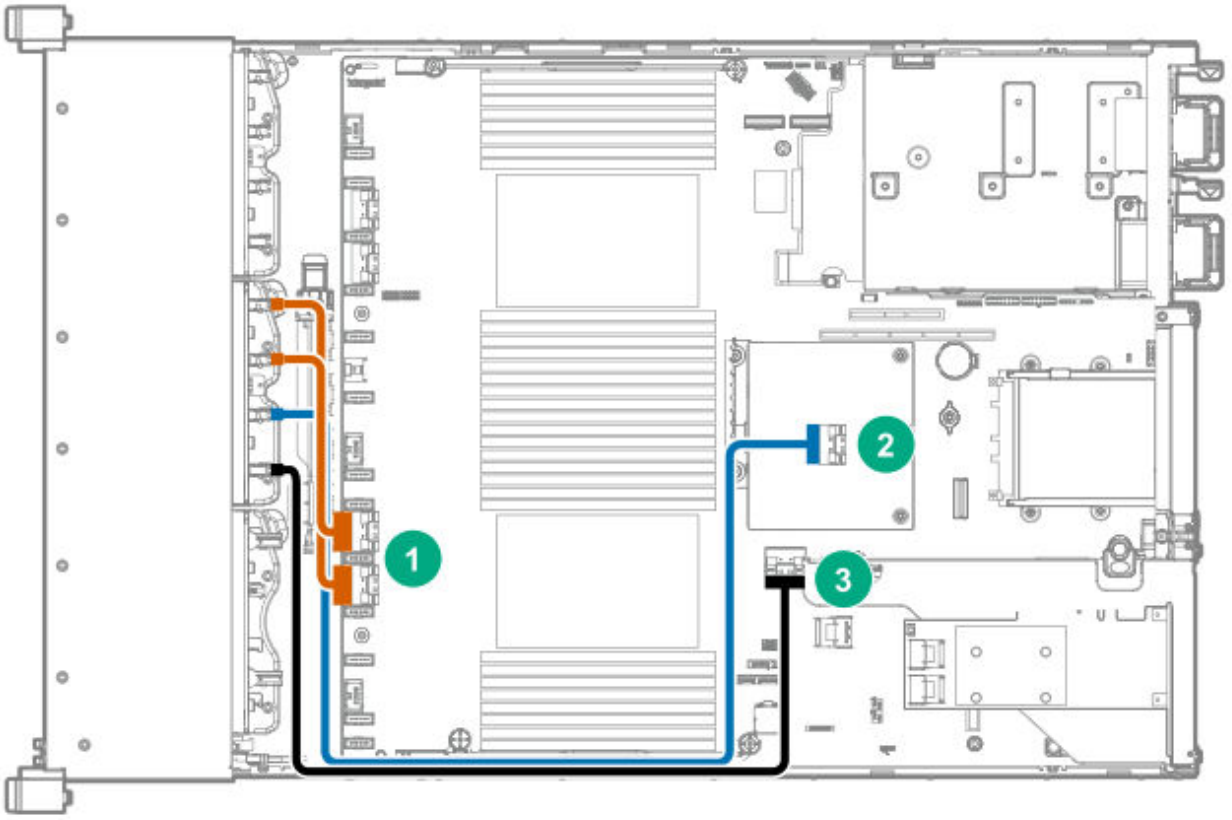

Item	Connections
1	NVMe ports 1A and 2A on the system board
2	HPE DL38X Gen10 Plus AROC to NVMe Adapter, port 7A
3	NVMe port 8A on the system board

Cable routing: 16 NVMe Balanced Direct Solution

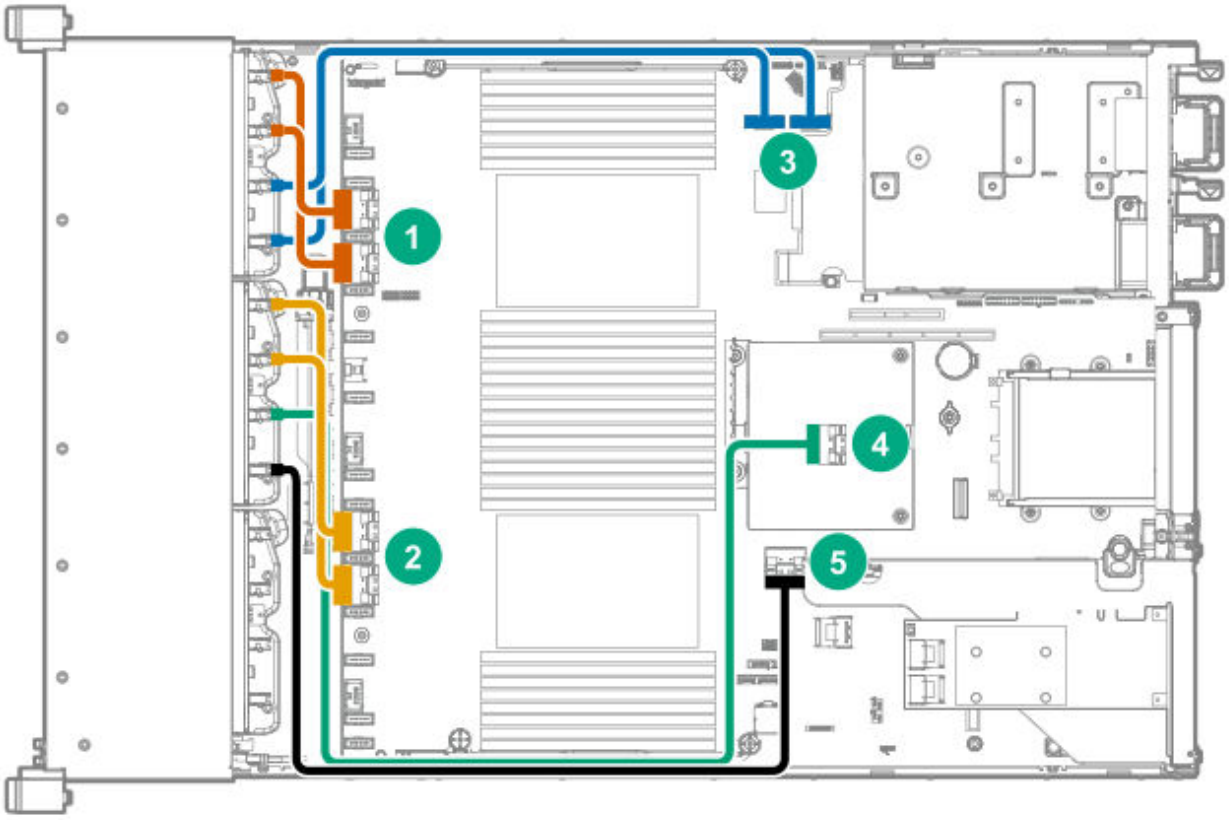

Item	Connections
1	NVMe ports 1B and 2B
2	NVMe ports 1A and 2A
3	NVMe ports 1C and 2C
4	HPE DL38X Gen10 Plus AROC to NVMe Adapter, port 7A
5	NVMe port 8A

Cable routing: 24 NVMe Balanced Direct Solution

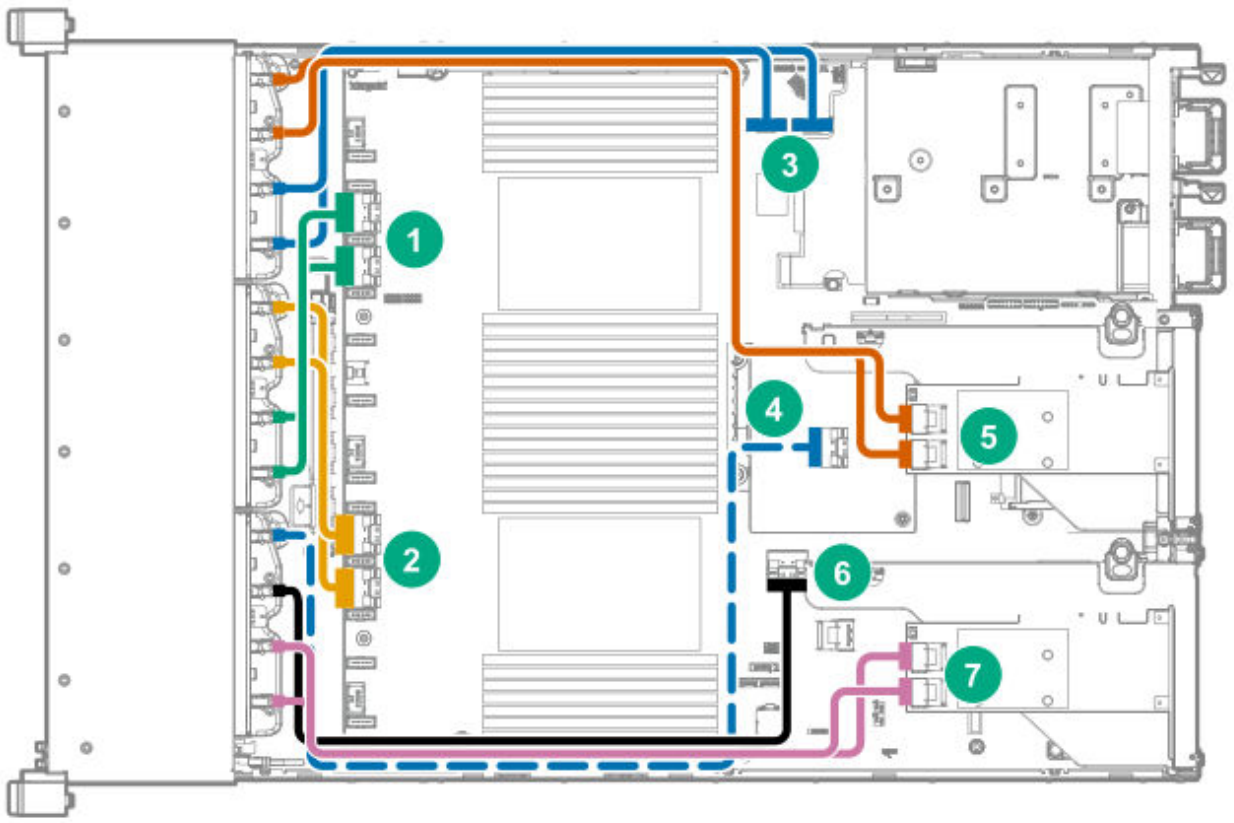

Item	Connections
1	NVMe ports 1B/2B
2	NVMe ports 1A/2A
3	NVMe ports 1C/2C
4	HPE Smart Array Flexible Smart Array Controller por t 7A
5	PCIe Gen4 x16 re-timer card (secondary riser)
6	NVMe port 8A
7	PCIe Gen4 x16 re-timer card (primary riser)

Cable routing: Front 8 LFF to system board

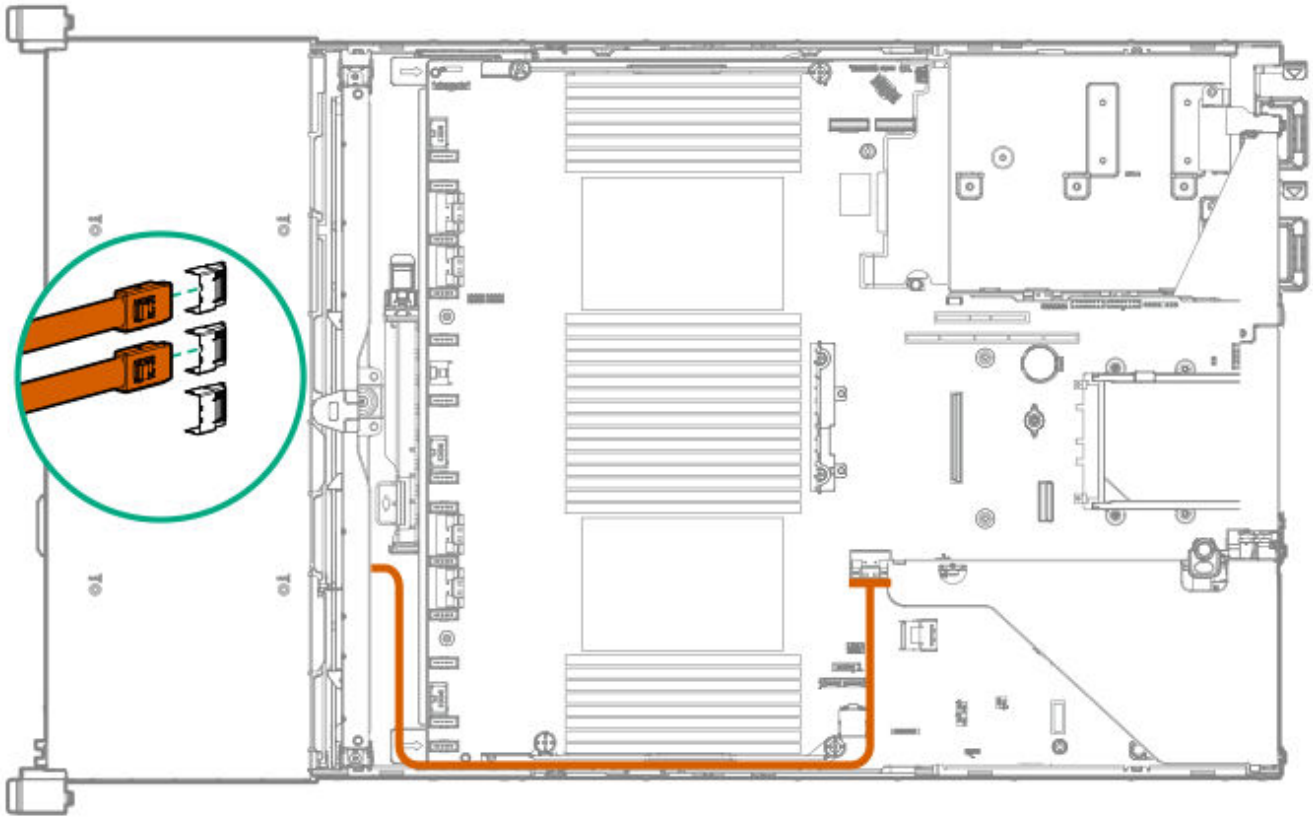

Cable routing: 12 LFF drive options (midtray to system board)

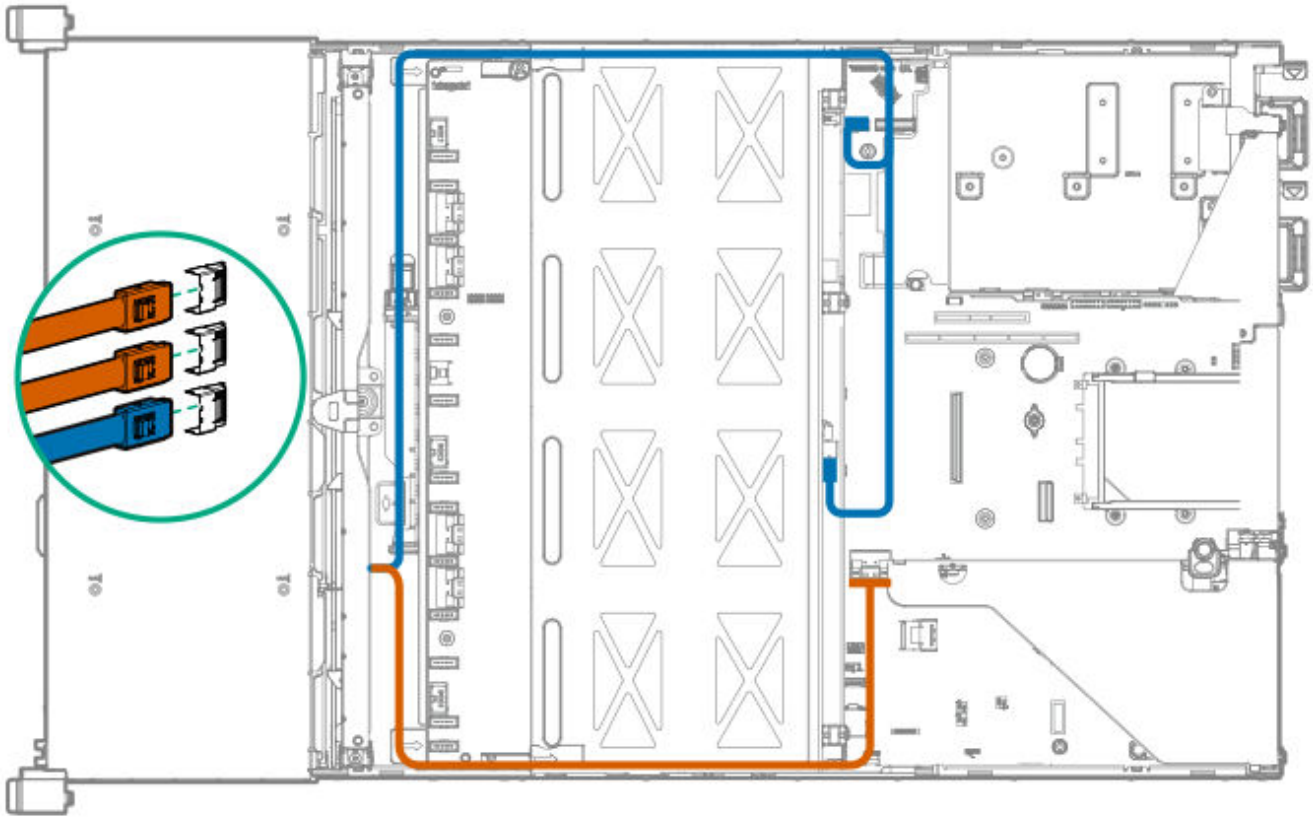

Cable routing: Front 12 LFF drive options (midtray to HPE Smart Array P816i-a SR Gen10 Controller, ports 1-4)

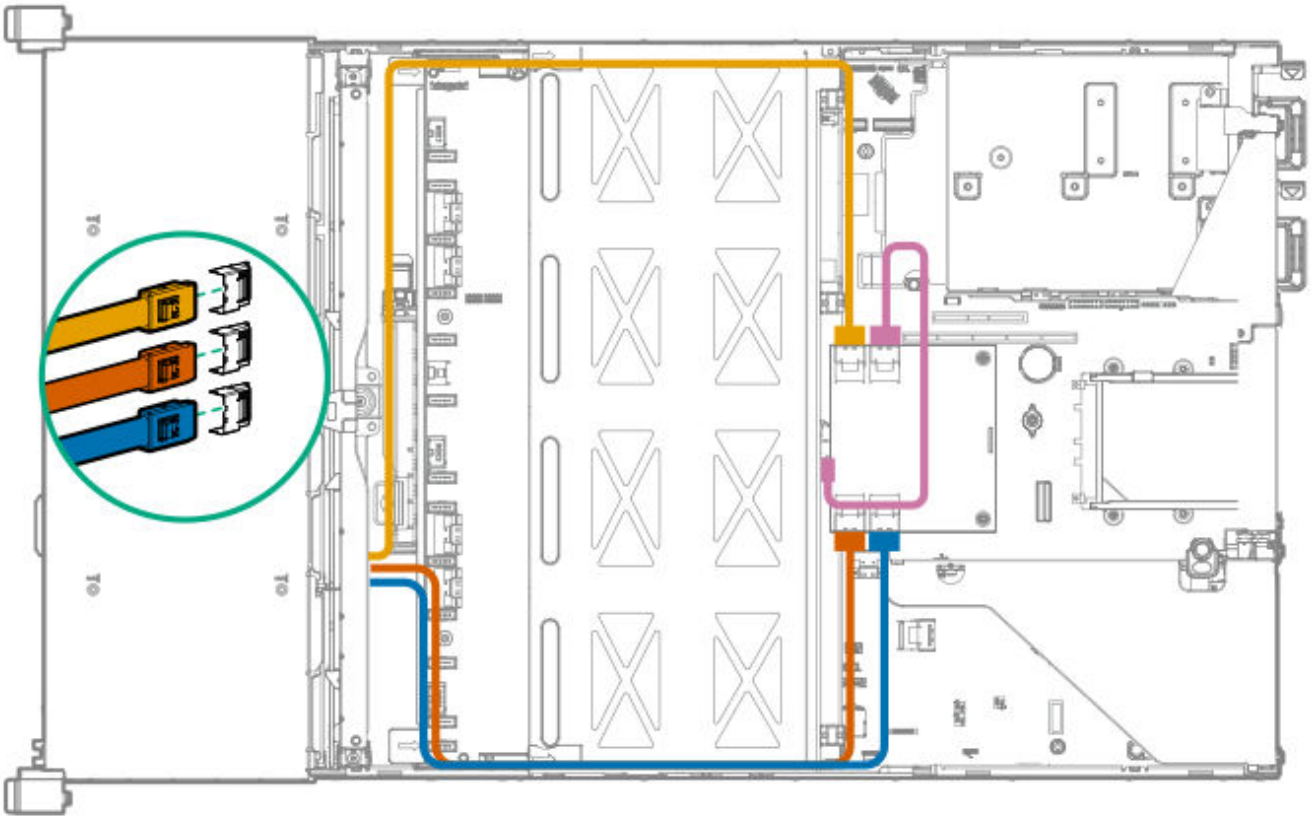

Cable routing: LFF backplane to HPE Smart Array P816i-a SR Gen10 Controller

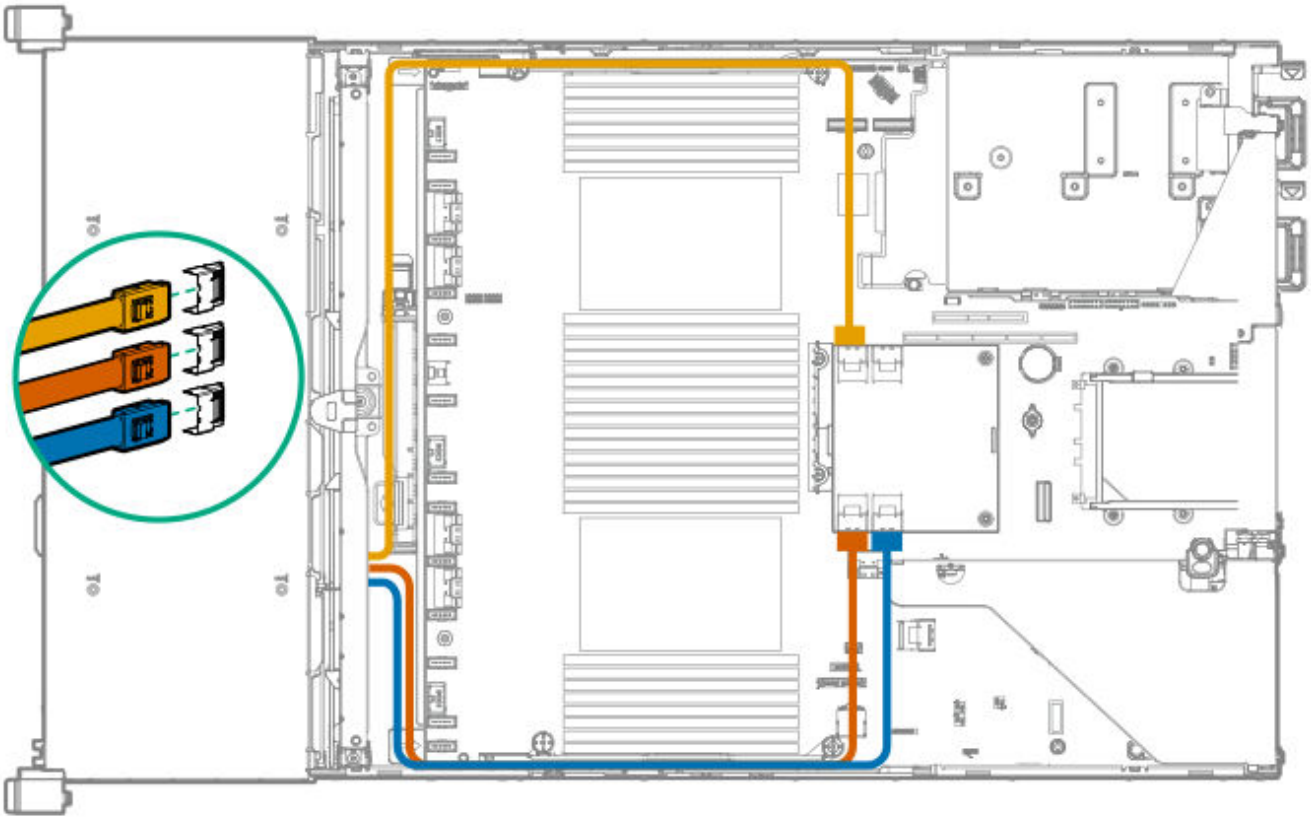

Cable routing: System board processor 1 (ports 1A and 2A) to slotted expansion board ports 1-2 in the primary riser

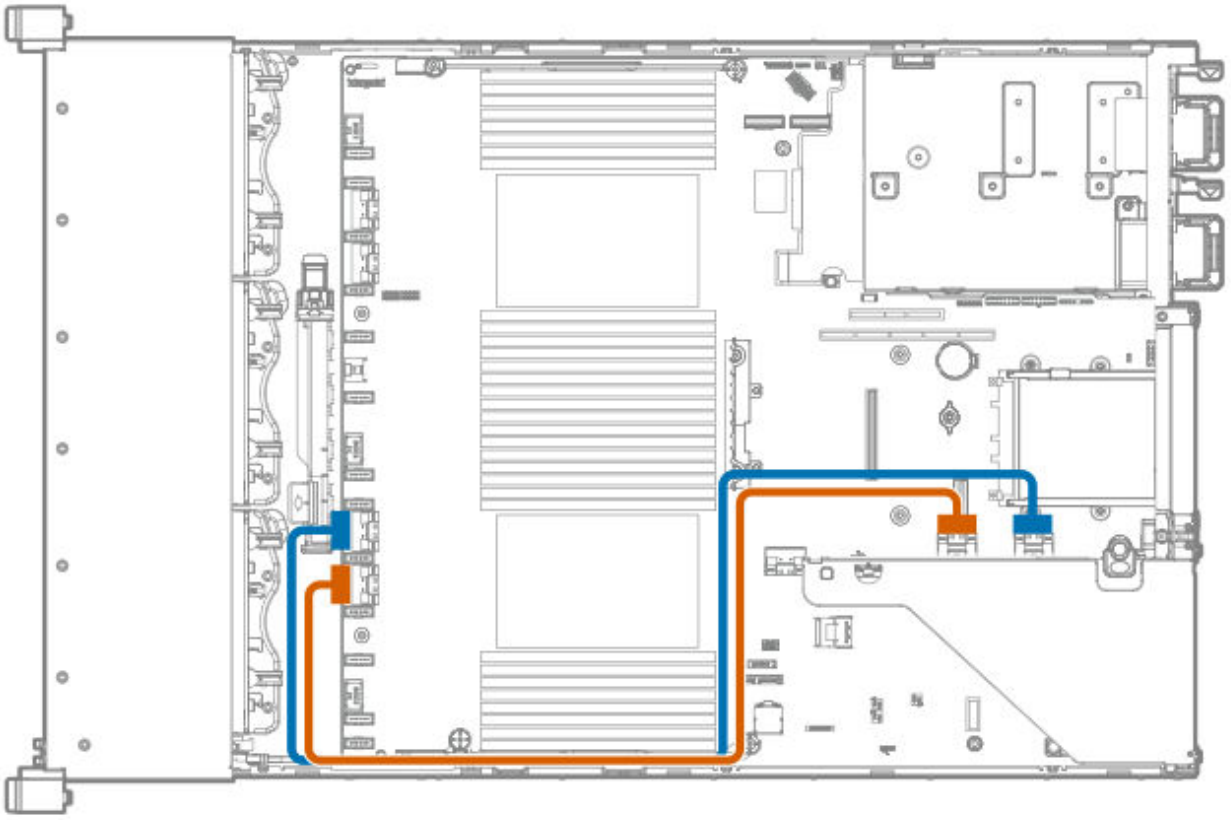

Cable routing: SFF Front I/O module to Front power/USB 3.1 Gen1 connector

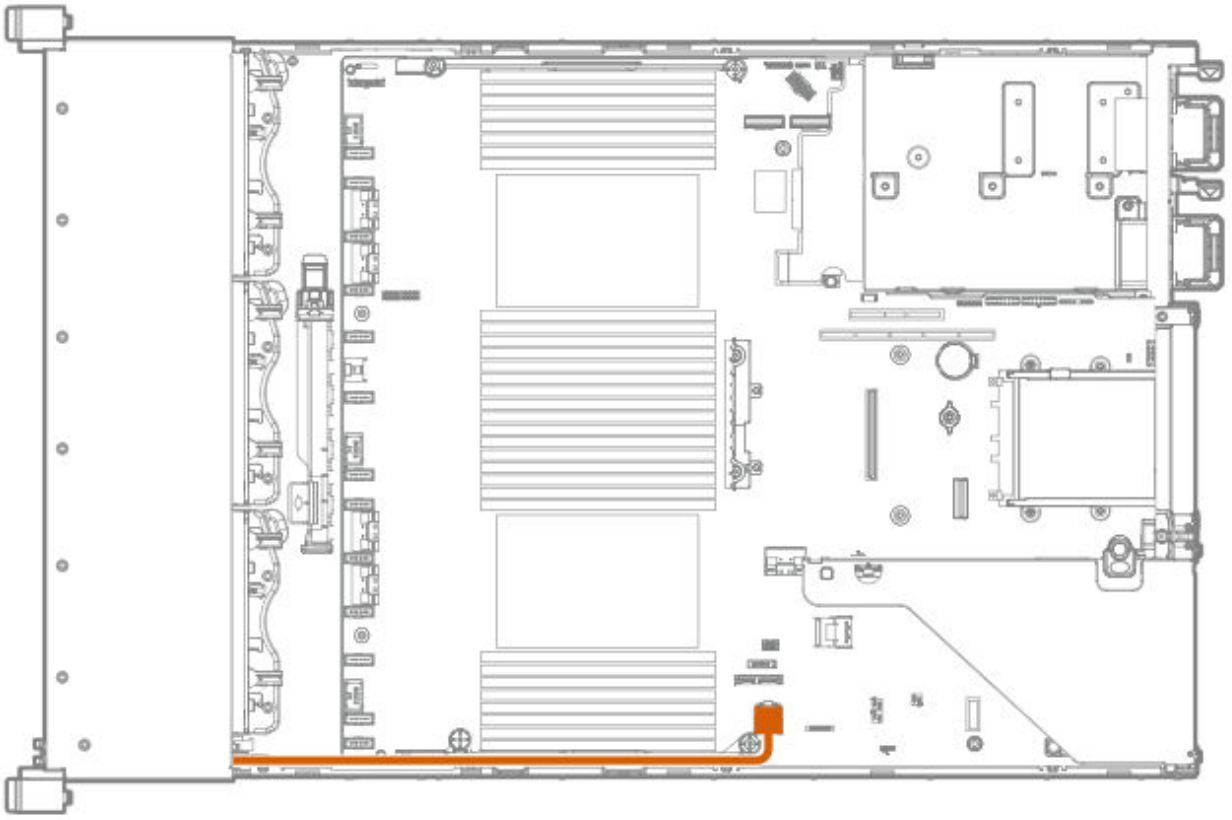

Cable routing: Systems Insight Display to front power/USB 3.1 Gen1 connector

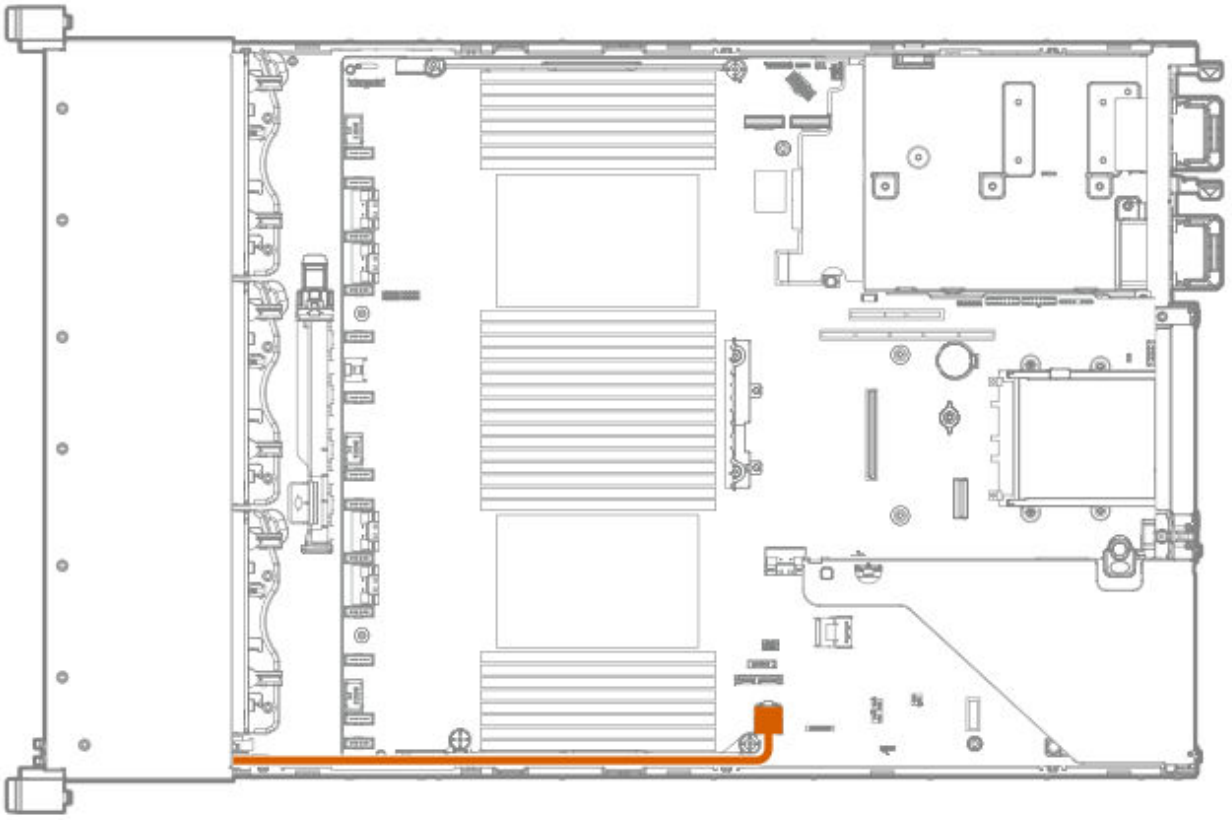

Cable routing: 12 LFF power switch and thermal sensor to system board

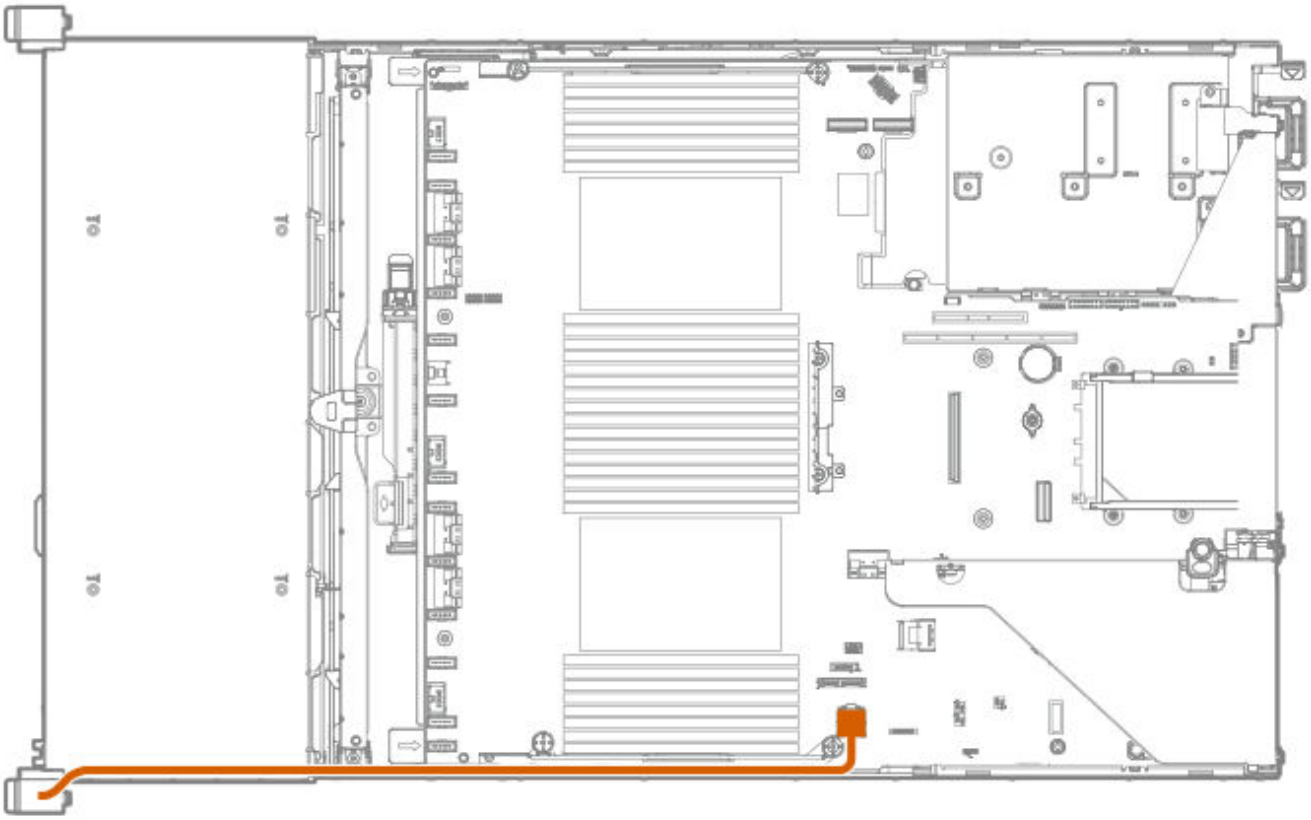

Cable routing: 8 LFF front I/O module display port to system board

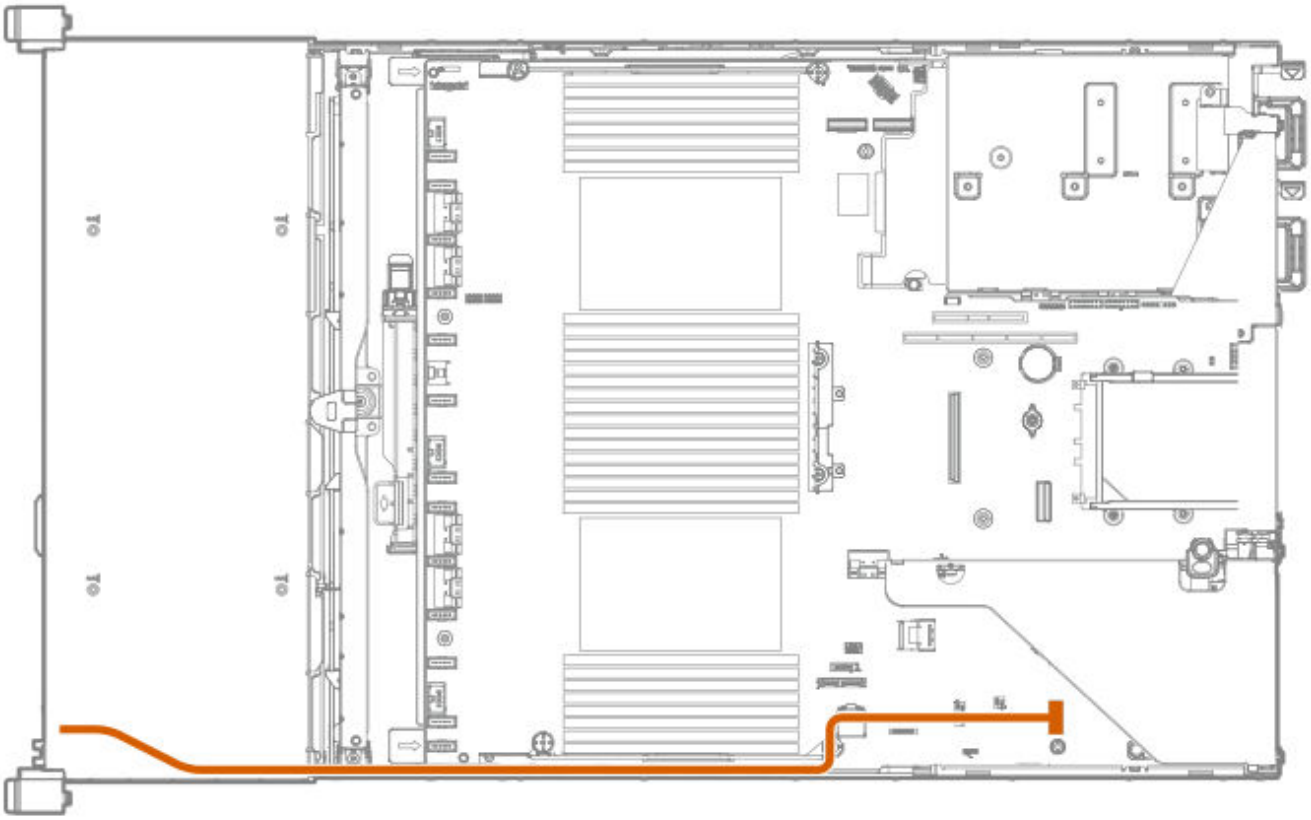

Cable routing: Display port to system board

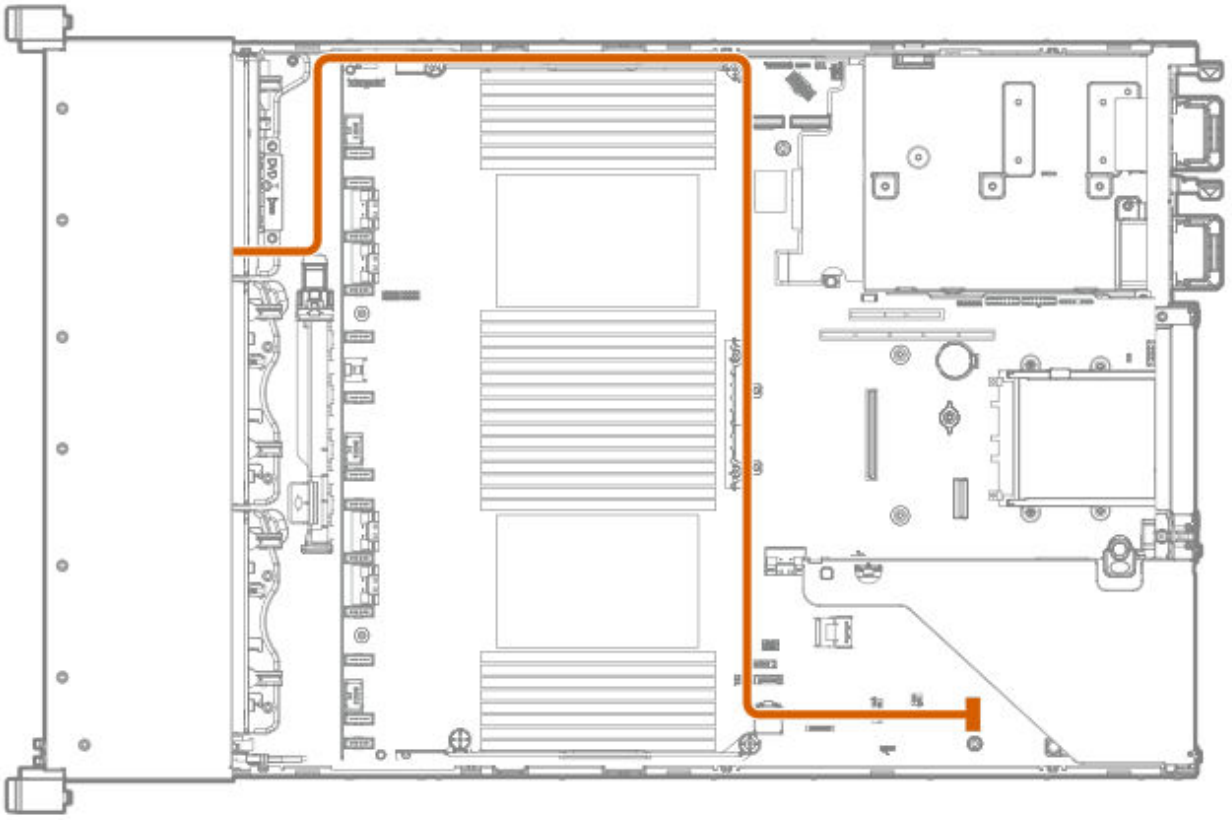

Cable routing: Universal Media bay external USB to dual USB port on system board

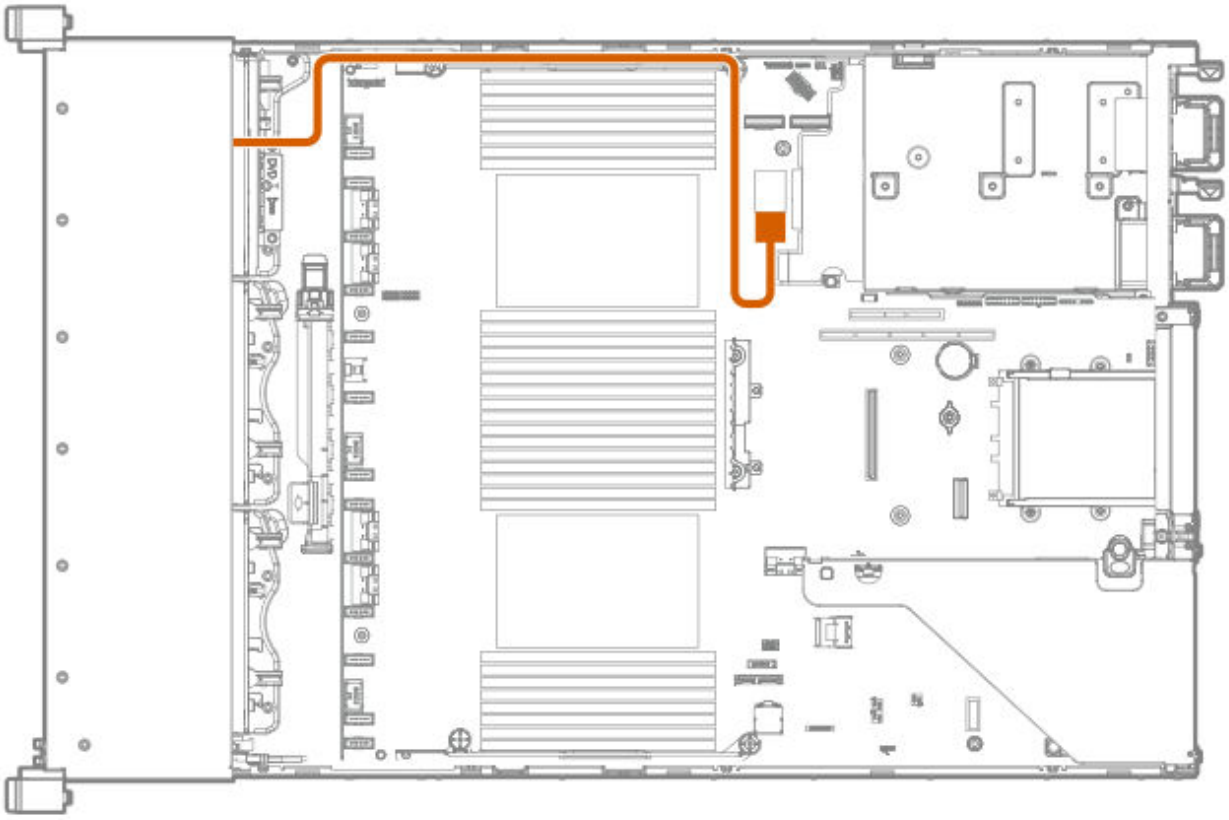

Cable routing: Rear serial port interface

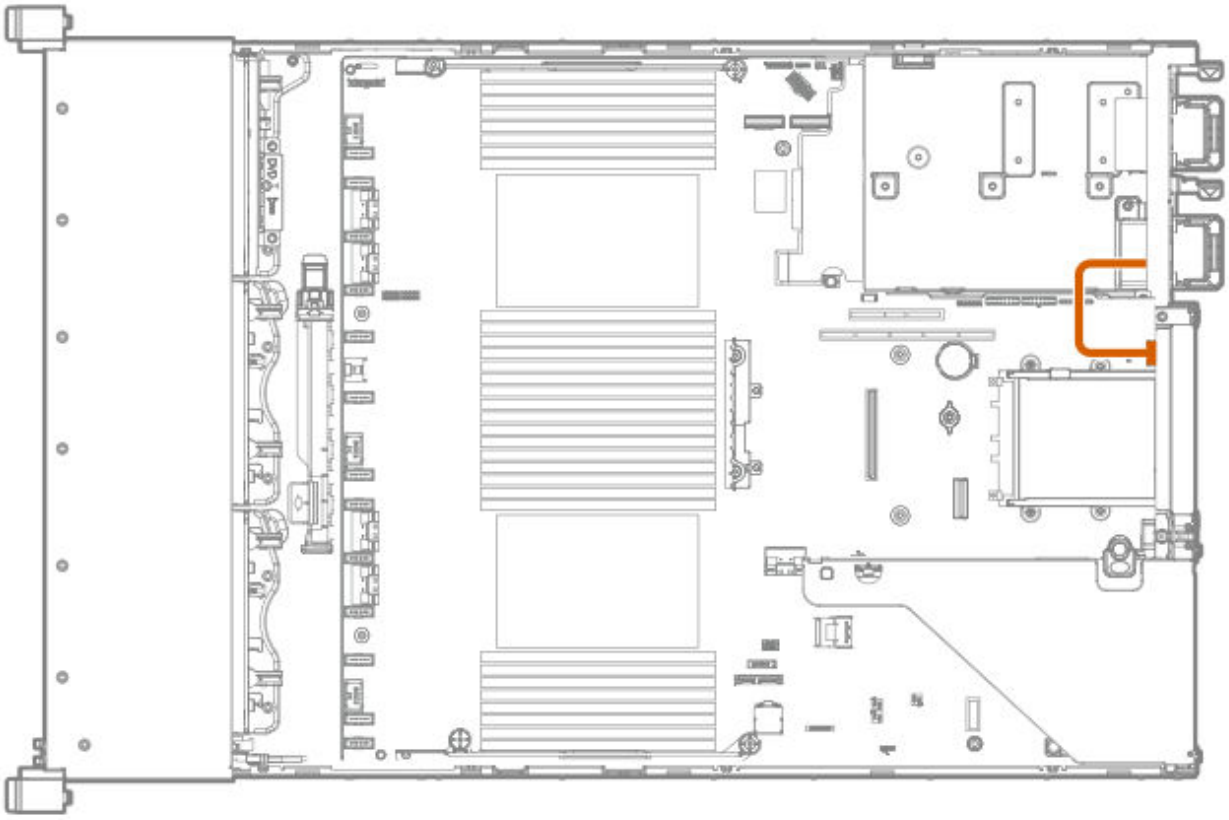

Cable routing: Rear serial port interface (tertiary riser)

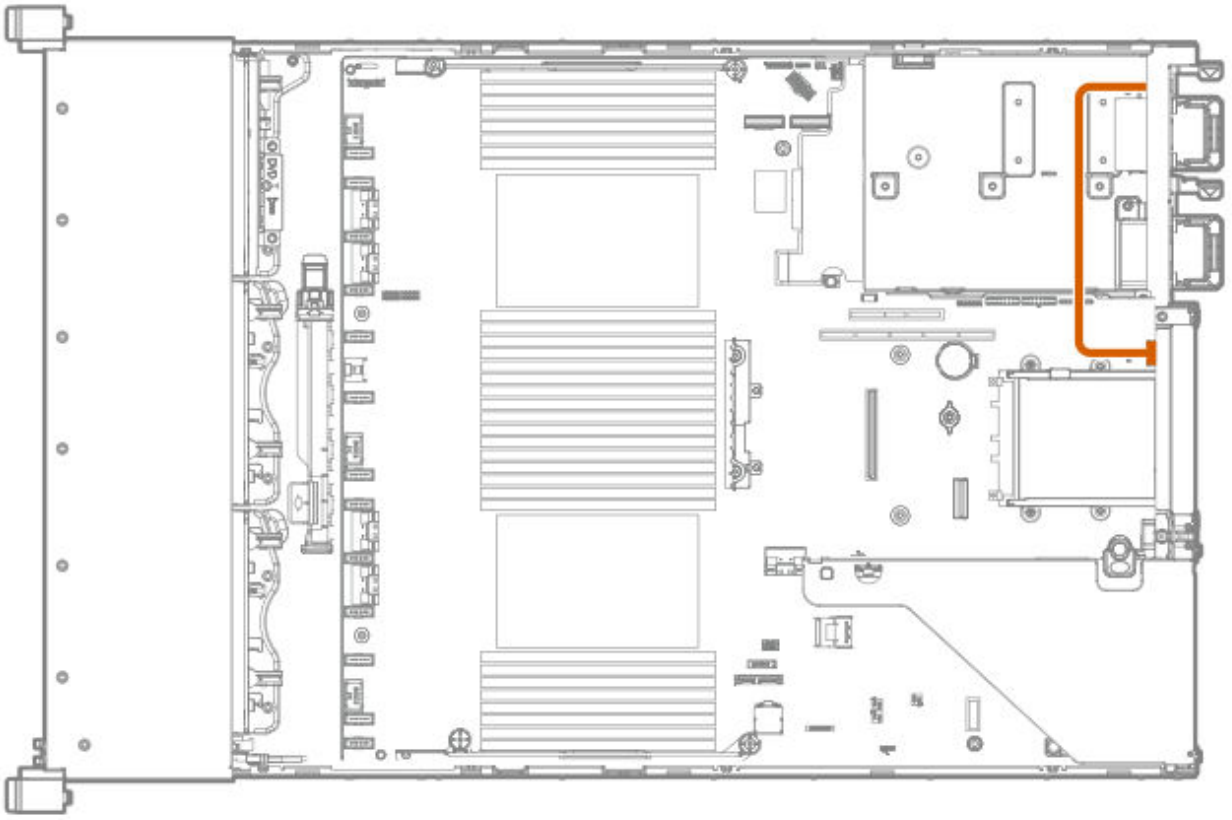

Cable routing: SFF backplane power cabling to the system board

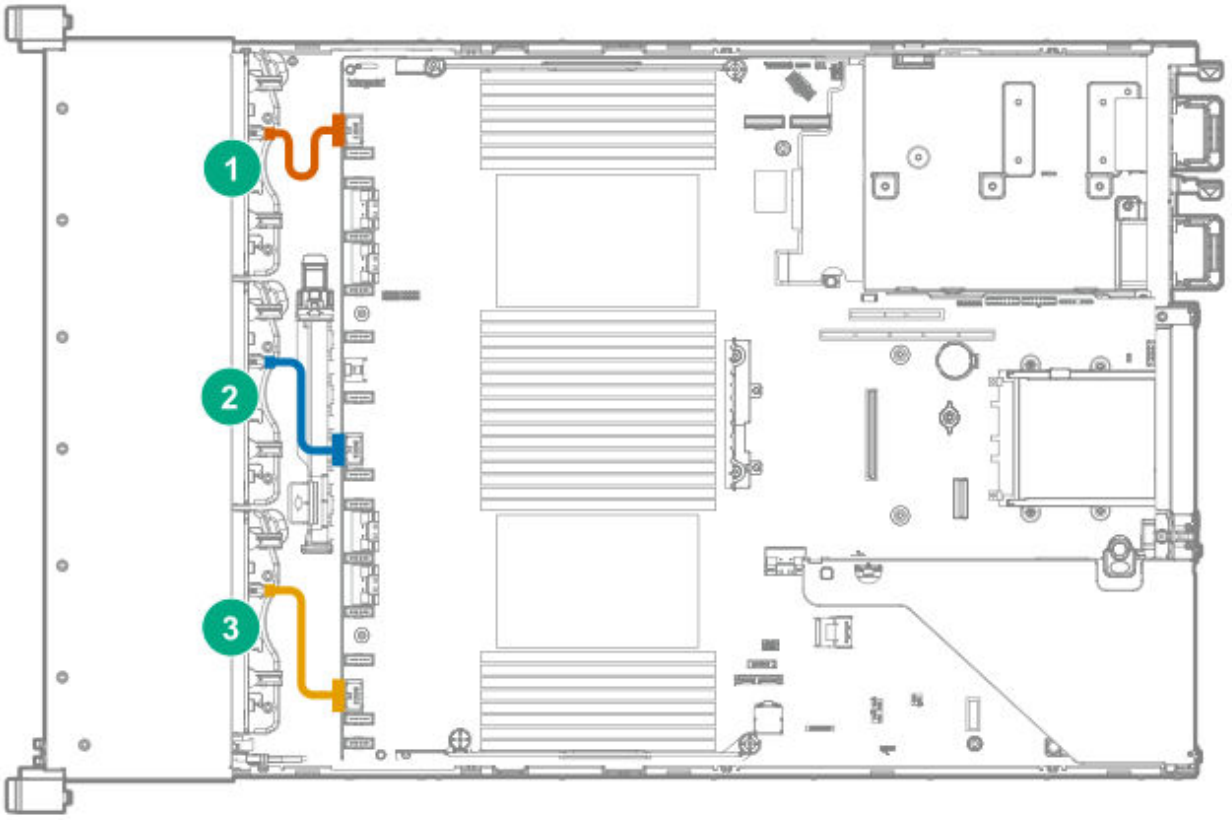

Item	Drive box
1	Box 1
2	Box 2
3	Box 3

Cable routing: LFF backplane power cabling to the system board

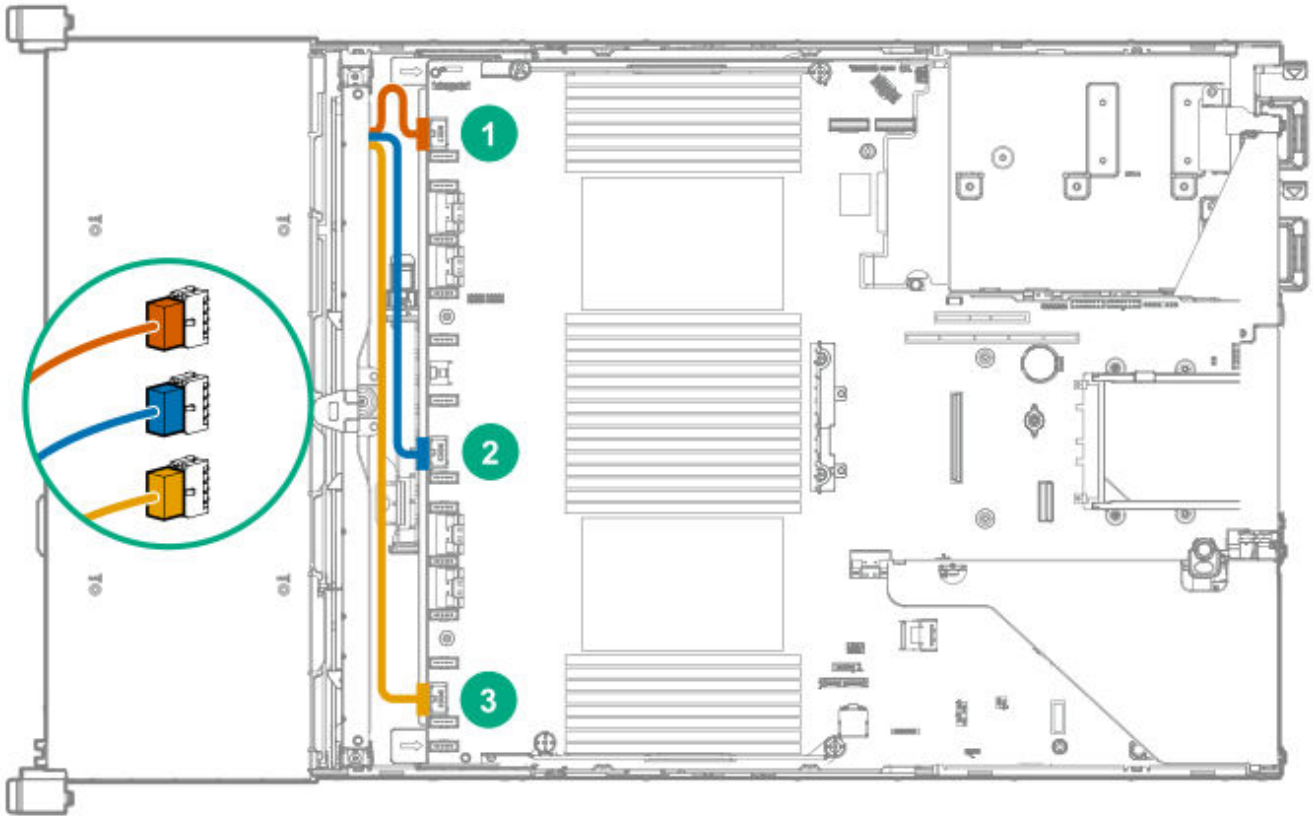

Item	Drive box
1	Box 1
2	Box 2
3	Box 3

Cable routing: 4 LFF backplane and 2 SFF side by side LFF power cable connections to the system board

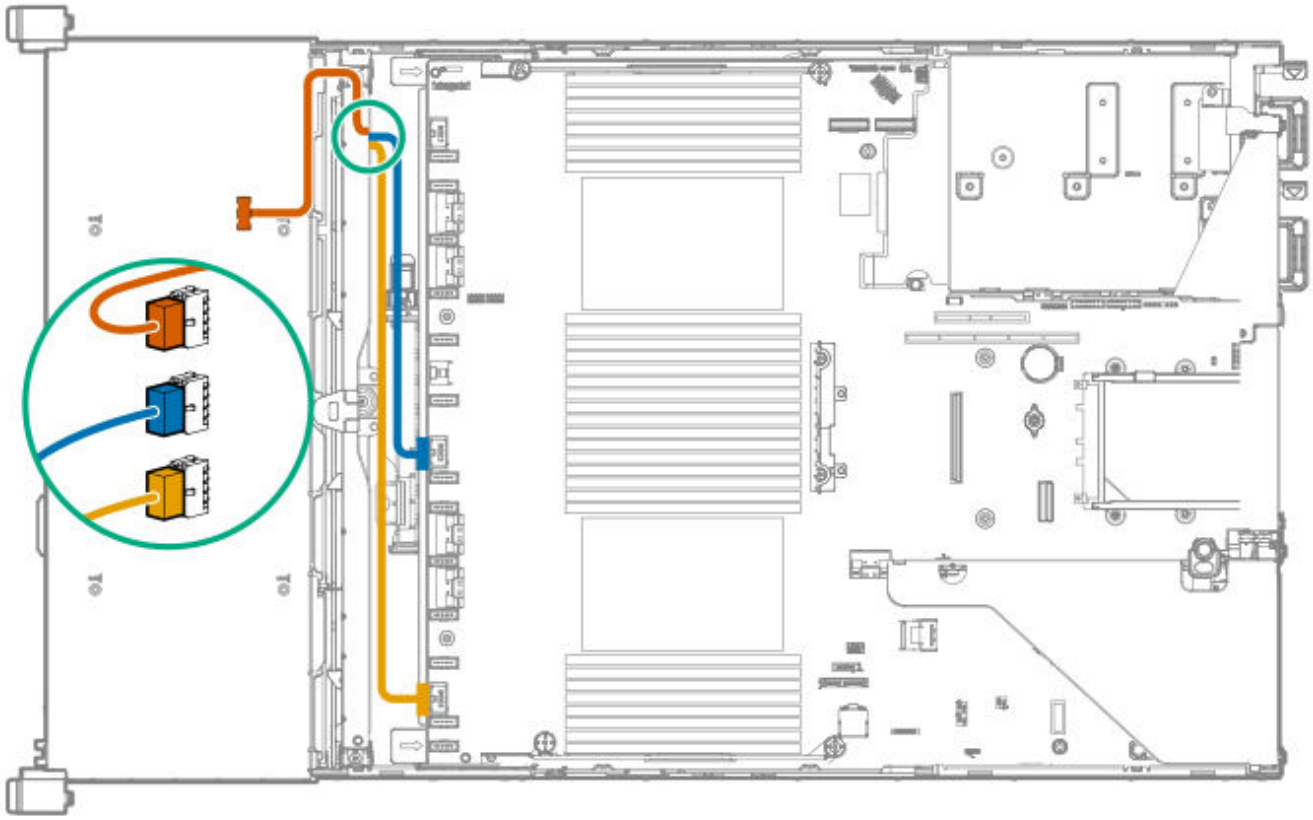

Cable routing: Rear 2 SFF riser power cable

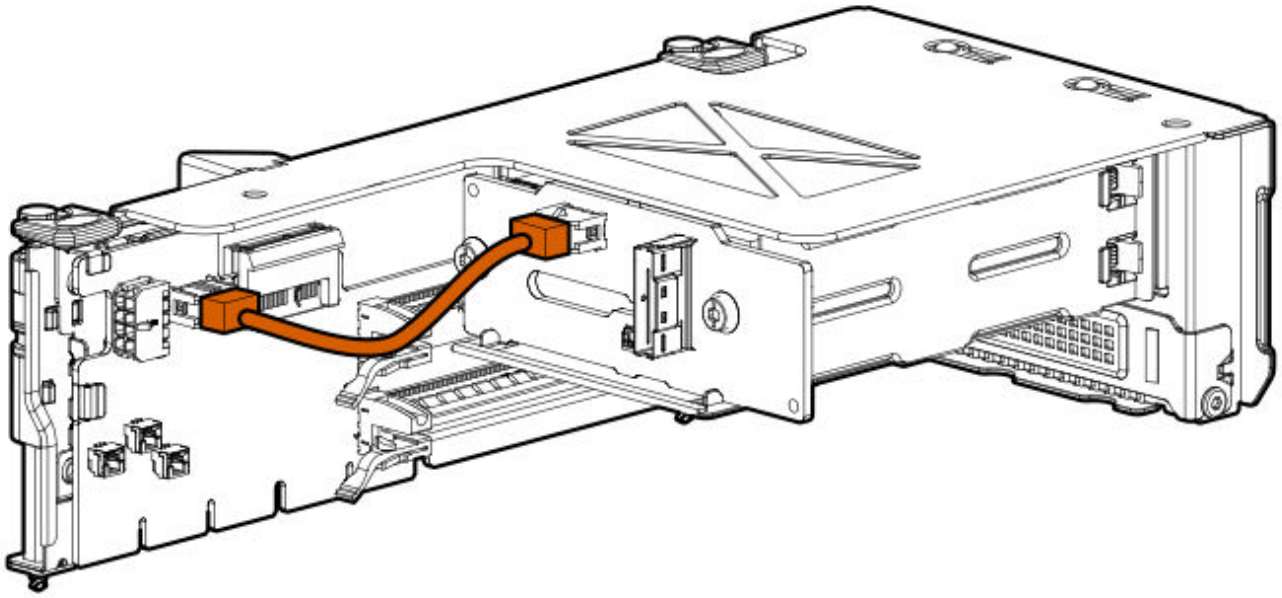

Software and configuration utilities

Server mode

The software and configuration utilities presented in this section operate in online mode, offline mode, or in both modes.

Software or configuration utility	Server mode
Active Health System	Online and Offline
HPE iLO 5	Online and Offline
HPE Smart Storage Administrator	Online and Offline
iLO RESTful API	Online and Offline
Intelligent Provisioning	Online and Offline

Software or configuration utility	Server mode
Scripting Toolkit for Windows and Linux	Online
Service Pack for ProLiant	Online and Offline
Smart Update Manager	Online and Offline
UEFI System Utilities	Offline

Product QuickSpecs

For more information about product features, specifications, options, configurations, and compatibility, see the product QuickSpecs on the Hewlett Packard Enterprise website (**https://www.hpe.com/info/qs**).

Active Health System Viewer

Active Health System Viewer (AHSV) is an online tool used to read, diagnose, and resolve server issues quickly using AHS uploaded data. AHSV provides Hewlett Packard Enterprise recommended repair actions based on experience and best practices. AHSV provides the ability to:

- Read server configuration information
- View Driver/Firmware inventory
- Review Event Logs
- Respond to Fault Detection Analytics alerts
- Open new and update existing support cases

Active Health System

The Active Health System monitors and records changes in the server hardware and system configuration.

The Active Health System provides:

- Continuous health monitoring of over 1600 system parameters

- Logging of all configuration changes
- Consolidated health and service alerts with precise time stamps
- Agentless monitoring that does not affect application performance

For more information about the Active Health System, see the iLO user guide at the following website: **https://www.hpe.com/support/ilo-docs**.

Active Health System data collection

The Active Health System does not collect information about your operations, finances, customers, employees, or partners.

Examples of information that is collected:

- Server model and serial number
- Processor model and speed
- Storage capacity and speed
- Memory capacity and speed
- Firmware/BIOS and driver versions and settings

The Active Health System does not parse or change OS data from third-party error event log activities (for example, content created or passed through the OS).

Active Health System Log

The data collected by the Active Health System is stored in the Active Health System Log. The data is logged securely, isolated from the operating system, and separate from customer data. Host resources are not consumed in the collection and logging of Active Health System data.

When the Active Health System Log is full, new data overwrites the oldest data in the log.

It takes less than 5 minutes to download the Active Health System Log and send it to a support professional to help you resolve an issue.

When you download and send Active Health System data to Hewlett Packard Enterprise, you agree to have the data used for analysis, technical resolution, and quality improvements. The data that is collected is managed according to the privacy statement, available at **https://www.hpe.com/info/privacy**.

You can also upload the log to the Active Health System Viewer. For more information, see the Active Health System Viewer documentation at the following website: **https://www.hpe.com/support/ahsv-docs**.

HPE iLO 5

iLO 5 is a remote server management processor embedded on the system boards of supported HPE servers and compute modules. iLO enables the monitoring and controlling of servers from remote locations. iLO management is a powerful tool that provides multiple ways to configure, update, monitor, and repair servers remotely.

For more information about iLO, see the iLO user guide at the following website: **https://www.hpe.com/support/ilo-docs**.

iLO Federation

iLO Federation enables you to manage multiple servers from one system using the iLO web interface.

When configured for iLO Federation, iLO uses multicast discovery and peer-to-peer communication to enable communication between the systems in iLO Federation groups.

When you navigate to one of the iLO Federation pages, a data request is sent from the iLO system running the web interface to its peers, and from those peers to other peers until all data for the selected iLO Federation group is retrieved.

iLO supports the following features:

- Group health status—View server health and model information.
- Group virtual media—Connect URL-based media for access by a group of servers.
- Group power control—Manage the power status of a group of servers.
- Group power capping—Set dynamic power caps for a group of servers.
- Group firmware update—Update the firmware of a group of servers.
- Group license installation—Enter a license key to activate iLO licensed features on a group of servers.
- Group configuration—Add iLO Federation group memberships for multiple iLO systems.

Any user can view information on iLO Federation pages, but a license is required for using the following features: Group virtual media, Group power control, Group power capping, Group configuration, and Group firmware update.

For more information about iLO Federation, see the iLO user guide at the following website: **https://www.hpe.com/support/ilo-docs**.

iLO Service Port

The Service Port is a USB port with the label **iLO** on supported servers and compute modules.

To find out if your server or compute module supports this feature, see the server specifications document at the following website: **https://www.hpe.com/info/qs**.

When you have physical access to a server, you can use the Service Port to do the following:

- Download the Active Health System Log to a supported USB flash drive.

  When you use this feature, the connected USB flash drive is not accessible by the host operating system.

- Connect a client (such as a laptop) with a supported USB to Ethernet adapter to access the following:

  - iLO web interface
  - Remote console
  - iLO RESTful API
  - CLI

  Hewlett Packard Enterprise recommends the HPE USB to Ethernet Adapter (part number Q7Y55A).

  Some servers, such as the XL170r, require an adapter to connect a USB to Ethernet adapter to the iLO Service Port.

  Hewlett Packard Enterprise recommends the HPE Micro USB to USB Adapter (part number 789904-B21).

When you use the iLO Service Port:

- Actions are logged in the iLO event log.
- The server UID flashes to indicate the Service Port status.

  You can also retrieve the Service Port status by using a REST client and the iLO RESTful API.

- You cannot use the Service Port to boot any device within the server, or the server itself.
- You cannot access the server by connecting to the Service Port.
- You cannot access the connected device from the server.

For more information about the iLO Service Port, see the iLO user guide at the following website: **https://www.hpe.com/support/ilo-docs**.

iLO RESTful API

iLO includes the iLO RESTful API, which is Redfish API conformant. The iLO RESTful API is a management interface that server management tools can use to perform configuration, inventory, and monitoring tasks by sending basic HTTPS operations (GET, PUT, POST, DELETE, and PATCH) to the iLO web server.

To learn more about the iLO RESTful API, see the Hewlett Packard Enterprise website (**https://www.hpe.com/support/restfulinterface/docs**).

For specific information about automating tasks using the iLO RESTful API, see libraries and sample code at **https://www.hpe.com/info/redfish**.

 For more information, watch the **Redfish & How it works with HPE Server Management** video.

RESTful Interface Tool

The RESTful Interface Tool (iLOREST) is a scripting tool that allows you to automate HPE server management tasks. It provides a set of simplified commands that take advantage of the iLO RESTful API. You can install the tool on your computer for remote use or install it locally on a server with a Windows or Linux Operating System. The RESTful Interface Tool offers an interactive mode, a scriptable mode, and a file-based mode similar to CONREP to help decrease automation times.

For more information, see the following website: **https://www.hpe.com/info/resttool**.

iLO Amplifier Pack

iLO Amplifier Pack is an advanced server inventory, firmware and driver update solution that enables rapid discovery, detailed inventory reporting, firmware, and driver updates by leveraging iLO advanced functionality. iLO Amplifier Pack performs rapid server discovery and inventory for thousands of supported servers for the purpose of updating firmware and drivers at scale.

For more information about iLO Amplifier Pack, see the iLO Amplifier Pack User Guide at the following website: **https://www.hpe.com/support/ilo-ap-ug-en**.

Integrated Management Log

The IML records hundreds of events and stores them in an easy-to-view form. The IML timestamps each event with one-minute granularity.

You can view recorded events in the IML in several ways, including the following:

- From within HPE SIM
- From within the UEFI System Utilities
- From within the Embedded UEFI shell
- From within the iLO web interface

Intelligent Provisioning

Intelligent Provisioning is a single-server deployment tool embedded in ProLiant servers and HPE Synergy compute modules. Intelligent Provisioning simplifies server setup, providing a reliable and consistent way to deploy servers.

NOTE:

- Rapid Setup Software is only available on the ProLiant 300 Series servers or below. When you launch F10 mode from the POST screen, you are prompted to select whether you want to enter the Intelligent Provisioning or HPE Rapid Setup Software mode.
- After you have selected a mode, you must reprovision the server to change the mode that launches when you boot to F10.

Intelligent Provisioning prepares the system for installing original, licensed vendor media and Hewlett Packard Enterprise-branded versions of OS software. Intelligent Provisioning also prepares the system to integrate optimized server support software from the Service Pack for ProLiant (SPP). SPP is a comprehensive systems software and firmware solution for ProLiant servers, server blades, their enclosures, and HPE Synergy compute modules. These components are preloaded with a basic set of firmware and OS components that are installed along with Intelligent Provisioning.

IMPORTANT:

HPE ProLiant DX/XL servers do not support operating system installation with Intelligent Provisioning, but they do support the maintenance features. For more information, see "Performing Maintenance" in the Intelligent Provisioning user guide and online help.

After the server is running, you can update the firmware to install additional components. You can also update any components that have been outdated since the server was manufactured.

To access Intelligent Provisioning:

- Press **F10** from the POST screen and enter either Intelligent Provisioning or HPE Rapid Setup Software.

- From the iLO web interface using **Lifecycle Management**. **Lifecycle Management** allows you to access Intelligent Provisioning without rebooting your server.

Intelligent Provisioning operation

NOTE:
Intelligent Provisioning 3.40 and later requires iLO firmware version 2.10 or later.

Intelligent Provisioning includes the following components:

- Critical boot drivers
- Active Health System (AHS)
- Erase Utility
- Deployment Settings

IMPORTANT:

- Although your server is preloaded with firmware and drivers, Hewlett Packard Enterprise recommends updating the firmware upon initial setup. Also, downloading and updating the latest version of Intelligent Provisioning ensures the latest supported features are available.
- For ProLiant servers, firmware is updated using the Intelligent Provisioning Firmware Update utility.
- Do not update firmware if the version you are currently running is required for compatibility.

NOTE:
Intelligent Provisioning does not function within multihomed configurations. A multihomed host is one that is connected to two or more networks or has two or more IP addresses.

Intelligent Provisioning provides installation help for the following operating systems:

- Microsoft Windows Server
- Red Hat Enterprise Linux

- SUSE Linux Enterprise Server
- VMware ESXi/vSphere Custom Image
- ClearOS

Not all versions of an OS are supported. For information about specific versions of a supported operating system, see the OS Support Matrix on the Hewlett Packard Enterprise website (**https://www.hpe.com/info/ossupport**).

Management security

HPE ProLiant Gen10, HPE ProLiant Gen10 Plus, and HPE Apollo servers are built with some of the industry's most advanced security capabilities, out of the box, with a foundation of secure embedded management applications and firmware. The management security provided by HPE embedded management products enables secure support of modern workloads, protecting your components from unauthorized access and unapproved use. The range of embedded management and optional software and firmware available with the iLO Advanced license provides security features that help ensure protection, detection, and recovery from advanced cyber attacks. For more information, see the HPE Gen10 and Gen10 Plus Security Reference Guide on the Hewlett Packard Enterprise Information Library at **https://www.hpe.com/support/gen10-security-ref-en**.

Scripting Toolkit for Windows and Linux

The STK for Windows and Linux is a server deployment product that delivers an unattended automated installation for high-volume server deployments. The STK is designed to support ProLiant servers. The toolkit includes a modular set of utilities and important documentation that describes how to apply these tools to build an automated server deployment process.

The STK provides a flexible way to create standard server configuration scripts. These scripts are used to automate many of the manual steps in the server configuration process. This automated server configuration process cuts time from each deployment, making it possible to scale rapid, high-volume server deployments.

For more information or to download the STK, see the **Hewlett Packard Enterprise website**.

UEFI System Utilities

The UEFI System Utilities is embedded in the system ROM. Its features enable you to perform a wide range of configuration activities, including:

- Configuring system devices and installed options.
- Enabling and disabling system features.
- Displaying system information.
- Selecting the primary boot controller or partition.
- Configuring memory options.
- Launching other preboot environments.

HPE servers with UEFI can provide:

- Support for boot partitions larger than 2.2 TB. Such configurations could previously only be used for boot drives when using RAID solutions.
- Secure Boot that enables the system firmware, option card firmware, operating systems, and software collaborate to enhance platform security.
- UEFI Graphical User Interface (GUI)
- An Embedded UEFI Shell that provides a preboot environment for running scripts and tools.
- Boot support for option cards that only support a UEFI option ROM.

Selecting the boot mode

This server provides two **Boot Mode** configurations: UEFI Mode and Legacy BIOS Mode. Certain boot options require that you select a specific boot mode. By default, the boot mode is set to **UEFI Mode**. The system must boot in **UEFI Mode** to use certain options, including:

- Secure Boot, UEFI Optimized Boot, Generic USB Boot, IPv6 PXE Boot, iSCSI Boot, and Boot from URL
- Fibre Channel/FCoE Scan Policy



NOTE:

The boot mode you use must match the operating system installation. If not, changing the boot mode can impact the ability of the server to boot to the installed operating system.

Prerequisite

When booting to **UEFI Mode**, leave **UEFI Optimized Boot** enabled.

Procedure

1. From the **System Utilities** screen, select **System Configuration > BIOS/Platform Configuration (RBSU) > Boot Options > Boot Mode**.
2. Select a setting.
   - **UEFI Mode** (default)—Configures the system to boot to a UEFI compatible operating system.
   - **Legacy BIOS Mode**—Configures the system to boot to a traditional operating system in Legacy BIOS compatibility mode.
3. Save your setting.
4. Reboot the server.

Secure Boot

Secure Boot is a server security feature that is implemented in the BIOS and does not require special hardware. Secure Boot ensures that each component launched during the boot process is digitally signed and that the signature is validated against a set of trusted certificates embedded in the UEFI BIOS. Secure Boot validates the software identity of the following components in the boot process:

- UEFI drivers loaded from PCIe cards
- UEFI drivers loaded from mass storage devices
- Preboot UEFI Shell applications
- OS UEFI boot loaders

When Secure Boot is enabled:

- Firmware components and operating systems with boot loaders must have an appropriate digital signature to execute during the boot process.
- Operating systems must support Secure Boot and have an EFI boot loader signed with one of the authorized keys to boot. For more information about supported operating systems, see **https://www.hpe.com/servers/ossupport**.

You can customize the certificates embedded in the UEFI BIOS by adding or removing your own certificates, either from a management console directly attached to the server, or by remotely connecting to the server using the iLO Remote Console.

You can configure Secure Boot:

- Using the **System Utilities** options described in the following sections.
- Using the iLO RESTful API to clear and restore certificates. For more information, see the Hewlett Packard Enterprise website (**https://www.hpe.com/info/redfish**).
- Using the `secboot` command in the Embedded UEFI Shell to display Secure Boot databases, keys, and security reports.

Launching the Embedded UEFI Shell

Use the **Embedded UEFI Shell** option to launch the Embedded UEFI Shell. The Embedded UEFI Shell is a preboot command-line environment for scripting and running UEFI applications, including UEFI boot loaders. The Shell also provides CLI-based commands you can use to obtain system information, and to configure and update the system BIOS.

Prerequisites

- **Embedded UEFI Shell** is set to **Enabled**.

Procedure

1. From the **System Utilities** screen, select **Embedded Applications > Embedded UEFI Shell**.

   The **Embedded UEFI Shell** screen appears.

2. Press any key to acknowledge that you are physically present.

   This step ensures that certain features, such as disabling **Secure Boot** or managing the **Secure Boot** certificates using third-party UEFI tools, are not restricted.

3. If an administrator password is set, enter it at the prompt and press **Enter**.

   The `Shell>` prompt appears.

4. Enter the commands required to complete your task.
5. Enter the `exit` command to exit the Shell.

HPE Smart Storage Administrator

HPE SSA is the main tool for configuring arrays on HPE Smart Array SR controllers. It exists in three interface formats: the HPE SSA GUI, the HPE SSA CLI, and HPE SSA Scripting. All formats provide support for configuration tasks. Some of the advanced tasks are available in only one format.

The diagnostic features in HPE SSA are also available in the standalone software HPE Smart Storage Administrator Diagnostics Utility CLI.

During the initial provisioning of the server or compute module, an array is required to be configured before the operating system can be installed. You can configure the array using SSA.

HPE SSA is accessible both offline (either through HPE Intelligent Provisioning or as a standalone bootable ISO image) and online:

- Accessing HPE SSA in the offline environment

  > **IMPORTANT:** If you are updating an existing server in an offline environment, obtain the latest version of HPE SSA through Service Pack for ProLiant before performing configuration procedures.

  Using one of multiple methods, you can run HPE SSA before launching the host operating system. In offline mode, users can configure or maintain detected and supported devices, such as optional Smart Array controllers and integrated Smart Array controllers. Some HPE SSA features are only available in the offline environment, such as setting the boot controller and boot volume.

- Accessing HPE SSA in the online environment
  This method requires an administrator to download the HPE SSA executables and install them. You can run HPE SSA online after launching the host operating system.

For more information, see HPE Smart Array SR Gen10 Configuration Guide at the **Hewlett Packard Enterprise website**.

HPE InfoSight for servers

The HPE InfoSight portal is a secure web interface hosted by HPE that allows you to monitor supported devices through a graphical interface.

HPE InfoSight for servers:

- Combines the machine learning and predictive analytics of HPE InfoSight with the health and performance monitoring of Active Health System (AHS) and HPE iLO to optimize performance and predict and prevent problems
- Provides automatic collection and analysis of the sensor and telemetry data from AHS to derive insights from the behaviors of the install base to provide recommendations to resolve problems and improve performance

For more information on getting started and using HPE InfoSight for servers, go to: **https://www.hpe.com/info/infosight-servers-docs**.

USB support

Hewlett Packard Enterprise Gen10 and Gen10 Plus servers support all USB operating speeds depending on the device that is connected to the server.

External USB functionality

Hewlett Packard Enterprise provides external USB support to enable local connection of USB devices for server administration, configuration, and diagnostic procedures.

For additional security, external USB functionality can be disabled through USB options in UEFI System Utilities.

Redundant ROM support

The server enables you to upgrade or configure the ROM safely with redundant ROM support. The server has a single ROM that acts as two separate ROM images. In the standard implementation, one side of the ROM contains the current ROM program version, while the other side of the ROM contains a backup version.

NOTE: The server ships with the same version programmed on each side of the ROM.

Safety and security benefits

When you flash the system ROM, the flashing mechanism writes over the backup ROM and saves the current ROM as a backup, enabling you to switch easily to the alternate ROM version if the new ROM becomes corrupted for any reason. This feature protects the existing ROM version, even if you experience a power failure while flashing the ROM.

Keeping the system current

Updating firmware or system ROM

To update firmware or system ROM, use one of the following methods:

- The **Firmware Update** option in the System Utilities.
- The `fwupdate` command in the **Embedded UEFI Shell**.
- Service Pack for ProLiant (SPP)
- HPE online flash components
- Moonshot Component Pack

Service Pack for ProLiant

SPP is a systems software and firmware solution delivered as a single ISO file download. This solution uses SUM as the deployment tool and is tested and supports HPE ProLiant, HPE BladeSystem, HPE Synergy, and HPE Apollo servers and infrastructure.

SPP, along with SUM and SUT, provides Smart Update system maintenance tools that systematically update HPE ProLiant, HPE BladeSystem, HPE Synergy, and HPE Apollo servers and infrastructure.

SPP can be used in an online mode on a server running Windows, Linux, or VMware vSphere ESXi, or in an offline mode where the server is booted to an operating system included in the ISO file.

The preferred method for downloading an SPP is using the SPP Custom Download at **https://www.hpe.com/servers/spp/custom**.

The SPP is also available for download from the SPP download page at **https://www.hpe.com/servers/spp/download**.

Smart Update Manager

SUM is an innovative tool for maintaining and updating the firmware, drivers, and system software of HPE ProLiant, HPE BladeSystem, HPE Synergy, HPE Superdome Flex servers, and HPE Apollo servers, infrastructure, and associated options.

SUM identifies associated nodes you can update at the same time to avoid interdependency issues.

Key features of SUM include:

- Discovery engine that finds installed versions of hardware, firmware, and software on nodes.
- SUM deploys updates in the correct order and ensures that all dependencies are met before deploying an update.
- Interdependency checking.
- Automatic and step-by-step Localhost Guided Update process.
- Web browser-based user interface.
- Ability to create custom baselines and ISOs.
- Support for iLO Repository (Gen10 or later iLO 5 nodes only).
- Simultaneous firmware and software deployment for multiple remote nodes.
- Local offline firmware deployments with SPP deliverables.
- Extensive logging in all modes.



NOTE:
Support for HPE Integrity servers has been discontinued from SUM 8.x.

Integrated Smart Update Tools

Integrated Smart Update Tools (SUT) is the smart update solution for performing online firmware and driver updates. SUT is used with iLO 4, iLO 5, and with update solutions (management appliances such as iLO Amplifier Pack or HPE OneView and Smart Update Manager (SUM) to stage, install, and activate firmware and driver updates.

The solution must be installed on the operating system, where it updates results through Rich Infrastructure Services (RIS) communication.

- **SUT**: Polls iLO to check for requests from SUM, iLO Amplifier Pack, or HPE OneView for updates through local iLO using the iLO channel interface driver installed on the OS and orchestrates staging, deploying, and activating updates. You can adjust the polling interval by issuing the appropriate command-line

option provided by SUT. Performs inventory on target servers, stages deployment, deploys updates, and then reboots the servers.

- **iLO 5 with integrated Smart Update** (Gen10 or later servers only): Performs iLO Repository-based updates by downloading the components from iLO Repository when iLO Installation Queue has the components which can be updated by SUT.
- **iLO Amplifier Pack and HPE OneView**: Displays available updates for servers. Communicates with SUT (or SUT 1.x) to initiate updates using the iLO Redfish interface. SUT reports the status of updates to iLO Amplifier Pack through iLO Restful Interface.
- **SUM**: A tool for firmware and driver maintenance for HPE ProLiant servers and associated options.



NOTE:

SUM and iLO Amplifier Pack should not manage the same nodes.

Updating firmware from the System Utilities

Use the **Firmware Updates** option to update firmware components in the system, including the system BIOS, NICs, and storage cards.

Procedure

1. Access the System ROM Flash Binary component for your server from the Hewlett Packard Enterprise Support Center.
2. Copy the binary file to a USB media or iLO virtual media.
3. Attach the media to the server.
4. Launch the **System Utilities**, and select **Embedded Applications > Firmware Update**.
5. Select a device.

   The **Firmware Updates** screen lists details about your selected device, including the current firmware version in use.
6. Select **Select Firmware File**.
7. Select the flash file in the **File Explorer** list.

   The firmware file is loaded and the **Firmware Updates** screen lists details of the file in the **Selected firmware file** field.

8. Select **Image Description**, and then select a firmware image.

   A device can have multiple firmware images.

9. Select **Start firmware update**.

Updating the firmware from the UEFI Embedded Shell

Procedure

1. Access the System ROM Flash Binary component for your server from the Hewlett Packard Enterprise Support Center (**https://www.hpe.com/support/hpesc**).
2. Copy the binary file to a USB media or iLO virtual media.
3. Attach the media to the server.
4. Boot to the UEFI Embedded Shell.
5. To obtain the assigned file system volume for the USB key, enter `map -r`.
6. Change to the file system that contains the System ROM Flash Binary component for your server. Enter one of the `fsx` file systems available, such as `fs0:` or `fs1:`, and press **Enter**.
7. Use the `cd` command to change from the current directory to the directory that contains the binary file.
8. Flash the system ROM by entering `fwupdate -d BIOS -f filename`.
9. Reboot the server. A reboot is required after the firmware update in order for the updates to take effect and for hardware stability to be maintained.

Online Flash components

This component provides updated system firmware that can be installed directly on supported operating systems. Additionally, when used in conjunction with SUM, this Smart Component allows the user to update firmware on remote servers from a central location. This remote deployment capability eliminates the need for the user to be physically present at the server to perform a firmware update.

Drivers

IMPORTANT: Always perform a backup before installing or updating device drivers.

Update drivers using any of the following **Smart Update Solutions**:

- Download the latest Service Pack for ProLiant (includes Smart Update Manager)
- Create a custom SPP download
- Download Smart Update Manager for Linux
- Download specific drivers
  To locate the drivers for a server, go to the **Hewlett Packard Enterprise Support Center website**, and then search for the product name/number.

Software and firmware

Update software and firmware before using the server for the first time, unless any installed software or components require an older version.

For system software and firmware updates, use one of the following sources:

- Download the SPP from the Hewlett Packard Enterprise website (**https://www.hpe.com/servers/spp/download**).
- Download individual drivers, firmware, or other system software components from the server product page in the Hewlett Packard Enterprise Support Center website (**https://www.hpe.com/support/hpesc**).

Operating system version support

For information about specific versions of a supported operating system, refer to the **operating system support matrix**.

HPE Pointnext Portfolio

HPE Pointnext delivers confidence, reduces risk, and helps customers realize agility and stability. Hewlett Packard Enterprise helps customers succeed through Hybrid IT by simplifying and enriching the on-premise experience, informed by public cloud qualities and attributes.

Operational Support Services enable you to choose the right service level, length of coverage, and response time to fit your business needs. For more information, see the Hewlett Packard Enterprise website:

https://www.hpe.com/us/en/services/operational.html

Utilize the Advisory and Transformation Services in the following areas:

- Private or hybrid cloud computing
- Big data and mobility requirements
- Improving data center infrastructure
- Better use of server, storage, and networking technology

For more information, see the Hewlett Packard Enterprise website:

https://www.hpe.com/services/consulting

Proactive notifications

30 to 60 days in advance, Hewlett Packard Enterprise sends notifications to subscribed customers on upcoming:

- Hardware, firmware, and software changes
- Bulletins
- Patches
- Security alerts

You can subscribe to proactive notifications on the **Hewlett Packard Enterprise website**.

Troubleshooting

NMI functionality

An NMI crash dump enables administrators to create crash dump files when a system is hung and not responding to traditional debugging methods.

An analysis of the crash dump log is an essential part of diagnosing reliability problems, such as hanging operating systems, device drivers, and applications. Many crashes freeze a system, and the only available action for administrators is to cycle the system power. Resetting the system erases any information that could support problem analysis, but the NMI feature preserves that information by performing a memory dump before a hard reset.

To force the OS to initiate the NMI handler and generate a crash dump log, the administrator can use the iLO Generate NMI feature.

Troubleshooting resources

Troubleshooting resources are available for HPE Gen10 and Gen10 Plus server products in the following documents:

- Troubleshooting Guide for HPE ProLiant Gen10 and Gen10 Plus servers provides procedures for resolving common problems and comprehensive courses of action for fault isolation and identification, issue resolution, and software maintenance.
- Error Message Guide for HPE ProLiant Gen10 servers and HPE Synergy provides a list of error messages and information to assist with interpreting and resolving error messages.
- Error Message Guide for HPE ProLiant Gen10 Plus servers and HPE Synergy provides a list of error messages and information to assist with interpreting and resolving error messages.
- Integrated Management Log Messages and Troubleshooting Guide for HPE ProLiant Gen10 and Gen10 Plus servers and HPE Synergy provides IML messages and associated troubleshooting information to resolve critical and cautionary IML events.

To access troubleshooting resources for your product, see the Hewlett Packard Enterprise Information Library:

- For Gen10 servers, see **https://www.hpe.com/info/gen10-troubleshooting**.
- For Gen10 Plus servers, see **https://www.hpe.com/info/gen10plus-troubleshooting**.

System battery replacement

System battery information

The server contains an internal lithium manganese dioxide, a vanadium pentoxide, or an alkaline battery that provides power to the real-time clock. If this battery is not properly handled, a risk of the fire and burns exists. To reduce the risk of personal injury:

- Do not attempt to recharge the battery.
- Do not expose the battery to temperatures higher than 60°C (140°F).
- Do not expose the battery to extremely low air pressure as it might lead to explosion or leakage of flammable liquid or gas.
- Do not disassemble, crush, puncture, short external contacts, or dispose the battery in fire or water.
- If the server no longer automatically displays the correct date and time, then replace the battery that provides power to the real-time clock. Under normal use, battery life is 5 to 10 years.

Replace the system battery

Prerequisites

Before you perform this procedure make sure you have a small flat-bladed, nonconductive tool available.
Procedure

1. Power down the server.
2. Remove all power:
   a. Disconnect each power cord from the power source.
   b. Disconnect each power cord from the server.
3. Do one of the following:
   - Extend the server from the rack.
   - Remove the server from the rack.

4. Remove the access panel.
5. If installed, remove the tertiary riser cage (Removing a riser cage).
6. Locate the battery on the system board (System board components).
7. Use a small flat-bladed, nonconductive tool to carefully lift the front of the battery from the socket.
8. Remove the battery.

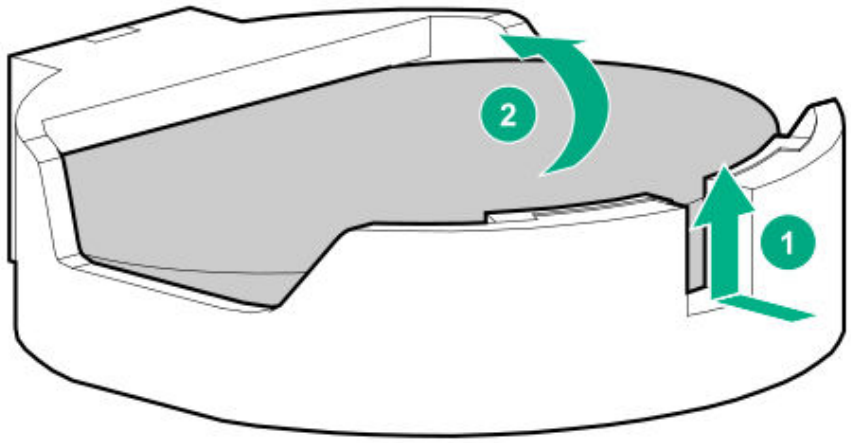

9. Install the system battery.

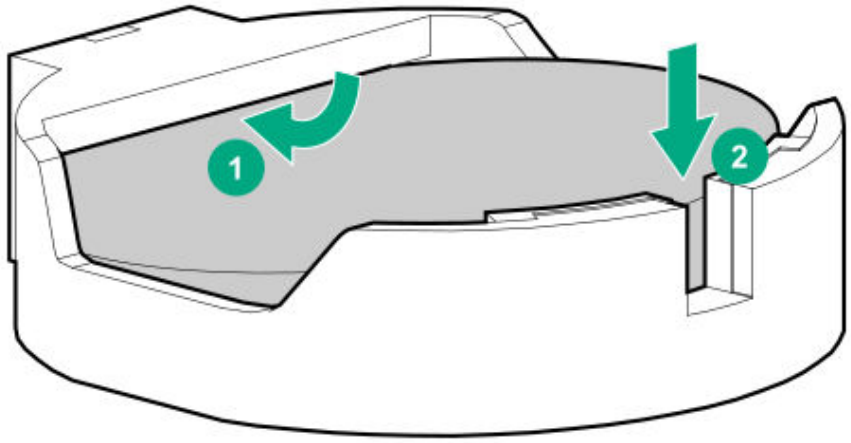

For more information about battery replacement or proper disposal, contact an authorized reseller or an authorized service provider.

Specifications

Environmental specifications

Specification	Value
Temperature range [1]	—
Operating	10°C to 35°C (50°F to 95°F)
Nonoperating	-30°C to 60°C (-22°F to 140°F)
Relative humidity (noncondensing)	—
Operating	Minimum to be the higher (more moisture) of -12°C (10.4°F) dew point or 8% relative humidity Maximum to be 24°C (75.2°F) dew point or 90% rel ative humidity
Nonoperating	5% to 95% 38.7°C (101.7°F), maximum wet bulb temperature

[1] All temperature ratings shown are for sea level. An altitude derating of 1.0°C per 304.8 m (1.8°F per 1000 ft) to 3048 m (10,000 ft) is applicable. No direct sunlight allowed. Maximum rate of change is 20°C per hour (36°F per hour). The upper limit and rate of change might be limited by the type and number of options installed.

For certain approved hardware configurations, the supported system inlet temperature range is extended:

- 5°C to 10°C (41°F to 50°F) and 35°C to 40°C (95°F to 104°F) at sea level with an altitude derating of 1.0°C per every 175 m (1.8°F per every 574 ft) above 900 m (2953 ft) to a maximum of 3048 m (10,000 ft).
- 40°C to 45°C (104°F to 113°F) at sea level with an altitude derating of 1.0°C per every 125 m (1.8°F per every 410 ft) above 900 m (2953 ft) to a maximum of 3048 m (10,000 ft).

The approved hardware configurations for this system are listed on the **Hewlett Packard Enterprise website**.

Mechanical specifications

Specification	Value
Height	87.50 mm (3.44 in)
Depth, SFF	711.20 mm (28.00 in)
Depth, LFF	749.30 mm (29.50 in)
Width	445.40 mm (17.54 in)
Weight, SFF minimum	16.05 kg (35.38 lb)
Weight, SFF maximum	28.60 kg (63.05 lb)
Weight, LFF minimum	22.50 kg (49.60 lb)
Weight, LFF maximum	34.80 kg (76.72 lb)

Power supply specifications

Depending on the installed options and the regional location where the server was purchased, the server can be configured with one of the following power supplies:

- HPE 500W Flex Slot Platinum Hot-plug Low Halogen Power Supply
- HPE 800W Flex Slot Platinum Hot-plug Low Halogen Power Supply
- HPE 800W Flex Slot Titanium Hot-plug Low Halogen Power Supply
- HPE 800W Flex Slot Universal Hot-plug Low Halogen Power Supply
- HPE 800W Flex Slot -48VDC Hot-plug Low Halogen Power Supply
- HPE 1600 W Flex Slot Platinum Hot-plug Low Halogen Power Supply
- HPE 1600 W Flex Slot -48 VDC Hot-plug Power Supply

For detailed power supply specifications, see the QuickSpecs on the **Hewlett Packard Enterprise website**.

CAUTION: Mixing different types of power supplies in the same server might:

- Limit or disable some power supply features including support for power redundancy.
- Cause the system to become unstable and might shut down.

To ensure access to all available features, all power supplies in the same server should have the same output and efficiency ratings. Verify that all power supplies have the same part number and label color.

HPE 500W Flex Slot Platinum Hot-plug Low Halogen Power Supply

Specification	Value
Input requirements	—
Rated input voltage	100 VAC to 240 VAC 240 VDC for China only
Rated input frequency	50 Hz to 60 Hz Not applicable to 240 VDC
Rated input current	5.6 A at 100 VAC 2.7 A at 200 VAC 2.3 A at 240 VDC for China only
Maximum rated input power	557 W at 100 VAC 539 W at 200 VAC 537 W at 240 VDC for China only
BTUs per hour	1902 at 100 VAC 1840 at 200 VAC 1832 at 240 VDC for China only
Power supply output	—
Rated steady-state power	500 W at 100 VAC to 127 VAC input

Specification	Value
	500 W at 100 VAC to 240 VAC input 500 W at 240 VDC input for China only
Maximum peak power	500 W at 100 VAC to 127 VAC input 500 W at 100 VAC to 240 VAC input 500 W at 240 VDC input for China only

HPE 800W Flex Slot Platinum Hot-plug Low Halogen Power Supply

Specification	Value
Input requirements	—
Rated input voltage	100 VAC to 127 VAC 200 VAC to 240 VAC 240 VDC for China only
Rated input frequency	50 Hz to 60 Hz Not applicable to 240 VDC
Rated input current	9.1 A at 100 VAC 4.4 A at 200 VAC 3.6 A at 240 VDC for China only
Maximum rated input power	899 W at 100 VAC 867 W at 200 VAC 864 W at 240 VDC for China only
BTUs per hour	3067 at 100 VAC 2958 at 200 VAC 2949 at 240 VAC for China only
Power supply output	—
Rated steady-state power	800 W at 100 VAC to 127 VAC input

Specification	Value
	800 W at 100 VAC to 240 VAC input 800 W at 240 VDC input for China only
Maximum peak power	800 W at 100 VAC to 127 VAC input 800 W at 100 VAC to 240 VAC input 800 W at 240 VDC input for China only

HPE 800W Flex Slot Titanium Hot-plug Low Halogen Power Supply

Specification	Value
Input requirements	—
Rated input voltage	200 VAC to 240 VAC 240 VDC for China only
Rated input frequency	50 Hz to 60 Hz Not applicable to 240 VDC
Rated input current	4.35 A at 200 VAC 3.62 A at 240 VAC 3.62 A at 240 VDC for China only
Maximum rated input power	851 W at 200 VAC 848 W at 240 VAC 848 W at 240 VDC for China only
BTUs per hour	2905 at 200 VAC 2893 at 240 VAC 2893 at 240 VDC for China only
Power supply output	—
Rated steady-state power	800 W at 200 VAC to 240 VAC input 800 W at 240 VDC input for China only

Specification	Value
Maximum peak power	800 W at 200 VAC to 240 VAC input 800 W at 240 VDC input for China only

HPE 800W Flex Slot Universal Hot-plug Low Halogen Power Supply

Specification	Value
Input requirements	—
Rated input voltage	200 VAC to 277 VAC 380 VDC
Rated input frequency	50 Hz to 60 Hz
Rated input current	4.4 A at 200 VAC 3.1 A at 277 VAC 2.3 A at 380 VDC
Maximum rated input power	869 W at 200 VAC 865 W at 230 VAC 861 W at 277 VAC 863 W at 380 VDC
BTUs per hour	2964 at 200 VAC 2951 at 230 VAC 2936 at 277 VAC 2943 at 380 VDC
Power supply output	—
Rated steady-state power	800 W at 200 VAC to 277 VAC input
Maximum peak power	800 W at 200 VAC to 277 VAC input

HPE 800W Flex Slot -48VDC Hot-plug Low Halogen Power Supply

Specification	Value
Input requirements	—
Rated input voltage	-40 VDC to -72 VDC -48 VDC nominal input
Rated input current	22.1 A at -40 VDC input 18.2 A at -48 VDC input, nominal input 12.0 A at -72 VDC input
Rated input power (W)	874 W at -40 VDC input 865 W at -48 VDC input, nominal input 854 W at -72 VDC input
Rated input power (BTUs per hour)	2983 at -40 VDC input 2951 at -48 VDC input, nominal input 2912 at -72 VDC input
Power supply output	—
Rated steady-state power (W)	800 W at -40 VDC to -72 VDC
Maximum peak power (W)	800 W at -40 VDC to -72 VDC
Maximum peak power	800 W at -40 VDC to -72 VDC input

WARNING: To reduce the risk of electric shock or energy hazards:

- This equipment must be installed by trained service personnel.
- Connect the equipment to a reliably grounded secondary circuit source. A secondary circuit has no direct connection to a primary circuit and derives its power from a transformer, converter, or equivalent isolation device.
- The branch circuit overcurrent protection must be rated 27 A.

CAUTION: This equipment is designed to permit the connection of the earthed conductor of the DC supply circuit to the earthing conductor at the equipment.

If this connection is made, all of the following must be met:

- This equipment must be connected directly to the DC supply system earthing electrode conductor or to a bonding jumper from an earthing terminal bar or bus to which the DC supply system earthing electrode conductor is connected.
- This equipment must be located in the same immediate area (such as adjacent cabinets) as any other equipment that has a connection between the earthed conductor of the same DC supply circuit and the earthing conductor, and also the point of earthing of the DC system. The DC system must be earthed elsewhere.
- The DC supply source is to be located within the same premises as the equipment.
- Switching or disconnecting devices must not be in the earthed circuit conductor between the DC source and the point of connection of the earthing electrode conductor.

HPE 1600 W Flex Slot Platinum Hot-plug Low Halogen Power Supply

Specification	Value
Input requirements	—
Rated input voltage	200 VAC to 240 VAC 240 VDC for China only
Rated input frequency	50 Hz to 60 Hz
Rated input current	8.7 A at 200 VAC 7.2 A at 240 VAC
Maximum rated input power	1734 W at 200 VAC 1725 W at 240 VAC
BTUs per hour	5918 at 200 VAC

Specification	Value
	5884 at 240 VAC
Power supply output	—
Rated steady-state power	1600 W at 200 VAC to 240 VAC input 1600 W at 240 VDC input
Maximum peak power	2200 W for 1 ms (turbo mode) at 200 VAC to 240 VAC input

HPE 1600 W Flex Slot -48 VDC Hot-plug Power Supply

Specification	Value
Input requirements	—
Rated input voltage	-40 VDC to -72 VDC
Rated input frequency	DC
Nominal input current	44.2 A DC at -40 VDC input 36.6 A DC at -48 VDC input 24.4 A DC at -72 VDC input
Maximum Rated Input Wattage Rating	1766 W at -40 VDC input 1758 W at -48 VDC input 1755 W at -72 VDC input
BTUs per hour	6026 at -40 VDC input 6000 at -48 VDC input input 5989 at -72 VDC input
Power supply output	—
Rated steady-state power	1600 W at -40 VDC to -72 VDC
Maximum peak power	1600 W at -40 VDC to -72 VDC

Websites

General websites

Hewlett Packard Enterprise Information Library

https://www.hpe.com/info/EIL

Single Point of Connectivity Knowledge (SPOCK) Storage compatibility matrix

https://www.hpe.com/storage/spock

Storage white papers and analyst reports

https://www.hpe.com/storage/whitepapers

For additional websites, see Support and other resources.

Product websites

HPE ProLiant DL385 Gen10 Plus Server product page

http://www.hpe.com/servers/dl385-gen10plus

HPE ProLiant DL385 Gen10 Plus Server user documents

http://www.hpe.com/info/dl385gen10plus-docs

Support and other resources

Accessing Hewlett Packard Enterprise Support

- For live assistance, go to the Contact Hewlett Packard Enterprise Worldwide website:

  https://www.hpe.com/info/assistance

- To access documentation and support services, go to the Hewlett Packard Enterprise Support Center website:

  https://www.hpe.com/support/hpesc

Information to collect

- Technical support registration number (if applicable)
- Product name, model or version, and serial number
- Operating system name and version
- Firmware version
- Error messages
- Product-specific reports and logs
- Add-on products or components
- Third-party products or components

Accessing updates

- Some software products provide a mechanism for accessing software updates through the product interface. Review your product documentation to identify the recommended software update method.
- To download product updates:

  Hewlett Packard Enterprise Support Center

  https://www.hpe.com/support/hpesc

  Hewlett Packard Enterprise Support Center: Software downloads

  https://www.hpe.com/support/downloads

  My HPE Software Center

  https://www.hpe.com/software/hpesoftwarecenter

- To subscribe to eNewsletters and alerts:

  https://www.hpe.com/support/e-updates

- To view and update your entitlements, and to link your contracts and warranties with your profile, go to the Hewlett Packard Enterprise Support Center **More Information on Access to Support Materials** page:

  https://www.hpe.com/support/AccessToSupportMaterials

> **IMPORTANT:**
> Access to some updates might require product entitlement when accessed through the Hewlett Packard Enterprise Support Center. You must have an HPE Passport set up with relevant entitlements.

Remote support

Remote support is available with supported devices as part of your warranty or contractual support agreement. It provides intelligent event diagnosis, and automatic, secure submission of hardware event notifications to Hewlett Packard Enterprise, which will initiate a fast and accurate resolution based on your product's service level. Hewlett Packard Enterprise strongly recommends that you register your device for remote support.

If your product includes additional remote support details, use search to locate that information.

Remote support and Proactive Care information

HPE Get Connected

https://www.hpe.com/services/getconnected

HPE Proactive Care services

https://www.hpe.com/services/proactivecare

HPE Datacenter Care services

https://www.hpe.com/services/datacentercare

HPE Proactive Care service: Supported products list

https://www.hpe.com/services/proactivecaresupportedproducts

HPE Proactive Care advanced service: Supported products list

https://www.hpe.com/services/proactivecareadvancedsupportedproducts

Proactive Care customer information

Proactive Care central

https://www.hpe.com/services/proactivecarecentral

Proactive Care service activation

https://www.hpe.com/services/proactivecarecentralgetstarted

Warranty information

To view the warranty information for your product, see the links provided below:

HPE ProLiant and IA-32 Servers and Options

https://www.hpe.com/support/ProLiantServers-Warranties

HPE Enterprise and Cloudline Servers

https://www.hpe.com/support/EnterpriseServers-Warranties

HPE Storage Products

https://www.hpe.com/support/Storage-Warranties

HPE Networking Products

https://www.hpe.com/support/Networking-Warranties

Regulatory information

To view the regulatory information for your product, view the Safety and Compliance Information for Server, Storage, Power, Networking, and Rack Products, available at the Hewlett Packard Enterprise Support Center:

https://www.hpe.com/support/Safety-Compliance-EnterpriseProducts

Additional regulatory information

Hewlett Packard Enterprise is committed to providing our customers with information about the chemical substances in our products as needed to comply with legal requirements such as REACH (Regulation EC No 1907/2006 of the European Parliament and the Council). A chemical information report for this product can be found at:

https://www.hpe.com/info/reach

For Hewlett Packard Enterprise product environmental and safety information and compliance data, including RoHS and REACH, see:

https://www.hpe.com/info/ecodata

For Hewlett Packard Enterprise environmental information, including company programs, product recycling, and energy efficiency, see:

https://www.hpe.com/info/environment

Documentation feedback

Hewlett Packard Enterprise is committed to providing documentation that meets your needs. To help us improve the documentation, send any errors, suggestions, or comments to Documentation Feedback (**docsfeedback@hpe.com**). When submitting your feedback, include the document title, part number, edition, and publication date located on the front cover of the document. For online help content, include the product name, product version, help edition, and publication date located on the legal notices page.