Hewlett Packard Enterprise

HPE ProLiant DL385 Gen10 Server User Guide

Abstract

This document is for the person who installs, administers, and troubleshoots servers and storage systems. Hewlett Packard Enterprise assumes you are qualified in the servicing of computer equipment and trained in recognizing hazards in products with hazardous energy levels.

Part Number: 880928-006
Published: September 2020
Edition: 6

© Copyright 2017–2020 Hewlett Packard Enterprise Development LP

Notices

The information contained herein is subject to change without notice. The only warranties for Hewlett Packard Enterprise products and services are set forth in the express warranty statements accompanying such products and services. Nothing herein should be construed as constituting an additional warranty. Hewlett Packard Enterprise shall not be liable for technical or editorial errors or omissions contained herein.

Confidential computer software. Valid license from Hewlett Packard Enterprise required for possession, use, or copying. Consistent with FAR 12.211 and 12.212, Commercial Computer Software, Computer Software Documentation, and Technical Data for Commercial Items are licensed to the U.S. Government under vendor's standard commercial license.

Links to third-party websites take you outside the Hewlett Packard Enterprise website. Hewlett Packard Enterprise has no control over and is not responsible for information outside the Hewlett Packard Enterprise website.

Acknowledgments

Linux® is the registered trademark of Linus Torvalds in the U.S. and other countries.

microSD is a trademark or a registered trademark of SD-3D in the United States, other countries of both.

Microsoft®, Windows®, and Windows Server® are either registered trademarks or trademarks of Microsoft Corporation in the United States and/or other countries.

Red Hat® Enterprise Linux® are registered trademarks of Red Hat, Inc. in the United States and other countries.

VMware ESXi™ and VMware vSphere® are registered trademarks or trademarks of VMware, Inc. in the United States and/or other jurisdictions.

All third-party marks are property of their respective owners.



Contents

Component identification 8

Front panel components 8
Front panel LEDs and buttons 10
UID button functionality 14
Power fault LEDs 14
Systems Insight Display LEDs 14
Systems Insight Display combined LED descriptions 16
Rear panel components 18
Rear panel LEDs 18
System board components 20
System maintenance switch descriptions 21
DIMM label identification 22
DIMM slot locations 23
Processor and socket components 24
Drive box identification 25
Drive bay numbering 26
Drive bay numbering: Smart Array controller 27
Drive bay numbering: SAS expander 28
Drive bay numbering: NVMe drives 31
uFF drive bay numbering 31
Drives 32
SAS/SATA drive components and LEDs 32
Smart Carrier NVMe (SCN) drive LED definitions 33
NVMe SSD button actions 34
uFF drive components and LEDs 35
DSC-25 2-port SFP28 card ports and LEDs 36
Fan bay numbering 38

Operations 39

Power up the server 39
Power down the server 39
Extending the server from the rack 39
Removing the server from the rack 40
Secure cables using the cable management arm 40
Remove the access panel 41
Install the access panel 42
Removing the fan cage 42
Installing the fan cage 43
Removing the air baffle or midplane drive cage 43
Installing the air baffle 45
Removing a riser cage 46
Removing a riser slot blank 47
Removing the hard drive blank 48
Accessing the Systems Insight Display 48
Accessing the product rear panel 49

Accessing the product rear panel 50

Setup 51
Optional service 51
Initial system installation 51
HPE Installation Service 51
Setting up the server 52
Operational requirements 55
Space and airflow requirements 55
Temperature requirements 56
Power requirements 56
Electrical grounding requirements 56
Server warnings and cautions 57
Rack warnings 58
Electrostatic discharge 58
POST screen options 59
Installing or deploying an operating system 59

Hardware options installation 60
Introduction 60
Installing the bezel and bezel lock 60
Drive options 61
Drive guidelines 61
Supported drive carriers 61
Installing a hot-plug SAS or SATA drive 62
Installing an NVMe drive 62
Installing a uFF drive and SCM drive carrier 63
Installing an M.2 drive 64
Power supply options 65
Hot-plug power supply calculations 65
Installing a redundant hot-plug power supply 65
Connecting a DC power cable to a DC power source 67
Installing a Universal Media Bay 68
Drive cage options 70
Installing a front 8NVMe SSD Express Bay drive cage 70
Installing a front 6SFF SAS/SATA + 2NVMe Premium drive cage 72
Installing a front 8SFF SAS/SATA drive cage in box 1 75
Installing a front 8SFF SAS/SATA drive cage in box 2 77
Installing a front 2SFF NVMe/SAS/SATA Premium drive cage 78
Installing a midplane 4LFF SAS/SATA drive cage 81
Installing a rear 2SFF SAS/SATA drive cage in the primary or secondary riser 84
Installing a rear 2 SFF SAS/SATA drive cage over the power supplies 87
Installing a rear 3LFF SAS/SATA drive cage 90
Fan options 92
Installing high-performance fans 92
Processor and heatsink options 94
Installing a processor 94
Installing a 1U or high-performance heatsink 98
Memory options 101
DIMM-processor compatibility 101
DIMM population information 101

Memory speed tables 102
Installing a DIMM 102
Controller options 103
Installing a storage controller 104
Energy pack options 105
HPE Smart Storage Battery 105
HPE Smart Storage Hybrid Capacitor 105
Installing an energy pack 106
Riser and riser cage options 108
Installing primary and secondary risers 108
Installing tertiary risers 109
Installing a secondary riser cage 110
Installing a tertiary riser cage 111
Installing the 2NVMe slimSAS riser option 114
Installing the 8NVMe slimSAS riser option 115
Expansion slots 116
Supported PCIe form factors 116
Installing expansion boards 117
Installing a 12G SAS Expander Card 119
Accelerator options 121
Installing the Pensando DSP DSC-25 2p SFP28 card with the iLO Sideband ALOM Module 126
Installing a FlexibleLOM adapter 130
Installing the Systems Insight Display 132
Installing the chassis intrusion detection switch 134
Installing a rear serial port interface 135
HPE Trusted Platform Module 2.0 Gen10 option 138
Overview 138
HPE Trusted Platform Module 2.0 guidelines 138
Installing and enabling the HPE TPM 2.0 Gen10 option 139

Cabling 144

HPE ProLiant Gen10 DL Servers Storage Cabling Guidelines 144
Cabling diagrams 144
Cable routing: Front 2SFF SAS side by side for LFF 147
Cable routing: Front 2SFF drive option for SFF 148
Cable routing: Front 2SFF drive option for LFF 148
Cable routing: Front/rear 2Premium SAS (SFF + LFF) 148
Cable routing: Front 8SFF SAS/SATA drive options 149
Cable routing: Midplane 4LFF SAS/SATA drive option 151
Cabling diagram: Mid 4LFF SAS/SATA drive cage for system board 152
Cable routing: Rear 2SFF SAS/SATA riser drive options 152
Cable routing: Rear 3LFF SAS/SATA drive option for system board 153
Cable routing: Rear 3LFF SAS/SATA drive option for SAS Expander 154
Cable routing: HPE 12G SAS Expander 154
Cable routing: Front 2SFF NVMe side-by-side drive options 155
Cable routing: Front/rear 2SFF Premium 156
Cable routing: Front 8SFF NVMe/SAS premium drive option 156
Cable routing: Front 8SFF NVMe drive options 157
Cable routing: 8NVMe Bay 1 drive options 159
Cable routing: Bays 1 and 2 8Premium 159
Cable routing: Storage controller backup power cable 160
Cable routing: External USB 2.0 cable 160
Cable routing: Power switch module/SID module 161

Software and configuration utilities 162
Server mode 162
Product QuickSpecs 162
Active Health System Viewer 162
Active Health System 163
HPE iLO 5 164
iLO Federation 164
iLO Service Port 164
iLO RESTful API 165
RESTful Interface Tool 165
iLO Amplifier Pack 165
Integrated Management Log 165
Intelligent Provisioning 166
Intelligent Provisioning operation 166
Management security 167
Scripting Toolkit for Windows and Linux 167
UEFI System Utilities 168
Selecting the boot mode 168
Secure Boot 169
Launching the Embedded UEFI Shell 169
HPE Smart Storage Administrator 170
HPE MR Storage Administrator 170
HPE InfoSight for servers 171
StorCLI 171
USB support 171
External USB functionality 172
Redundant ROM support 172
Safety and security benefits 172
Keeping the system current 172
Updating firmware or system ROM 172
Drivers 175
Software and firmware 175
Operating system version support 175
HPE Pointnext Portfolio 175
Proactive notifications 176

Troubleshooting 177
NMI functionality 177
Troubleshooting resources 177

System battery replacement 178
System battery information 178
Replace the system battery 178

Safety, warranty, and regulatory information 180
Regulatory information 180
Notices for Eurasian Economic Union 180
Turkey RoHS material content declaration 181
Ukraine RoHS material content declaration 181
Warranty information 181

Specifications 182
Environmental specifications 182
Mechanical specifications 182
Power supply specifications 183
HPE 500W Flex Slot Platinum Hot-plug Low Halogen Power Supply 183
HPE 800W Flex Slot Platinum Hot-plug Low Halogen Power Supply 184
HPE 800W Flex Slot Titanium Hot-plug Low Halogen Power Supply 185
HPE 800W Flex Slot Universal Hot-plug Low Halogen Power Supply 186
HPE 800W Flex Slot -48VDC Hot-plug Low Halogen Power Supply 186
HPE 1600 W Flex Slot Platinum Hot-plug Low Halogen Power Supply 188

Websites 189

Support and other resources 190
Accessing Hewlett Packard Enterprise Support 190
Accessing updates 190
Customer self repair 191
Remote support 191
Documentation feedback 191

Component identification

Front panel components

SFF front panel components

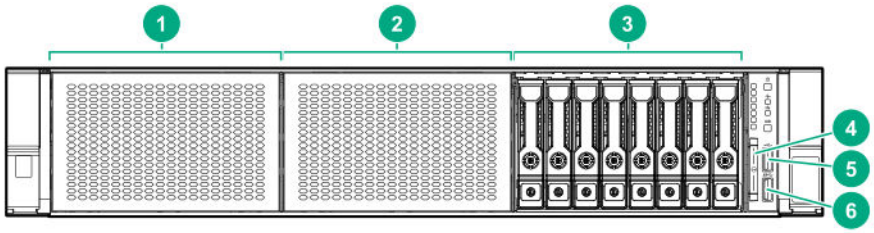

Item	Description
1	Box 1 (optional drives or universal media bay)
2	Box 2 (optional drives)
3	Box 3 drives 1 through 8
4	Serial label pull tab or optional **Systems Insight Display**
5	iLO service port
6	USB 3.1 Gen1 port

Universal media bay components

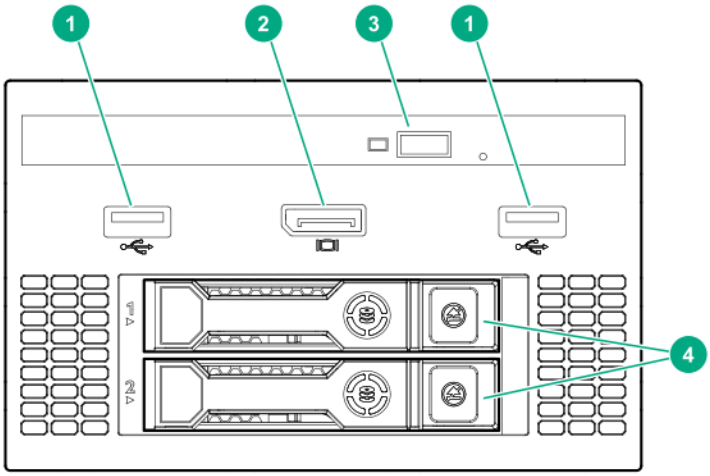

Item	Description
1	USB 2.0 port
2	Video display port
3	Optical disc drive (optional)
4	Drives (optional)

12 LFF front panel components

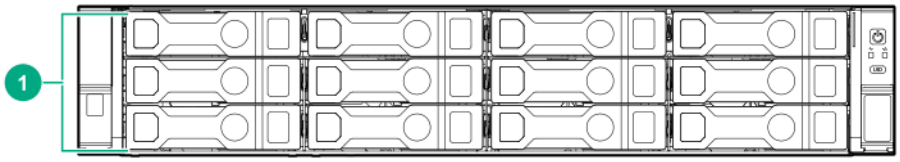

Item	Description
1	Drive bays

8 LFF front panel components

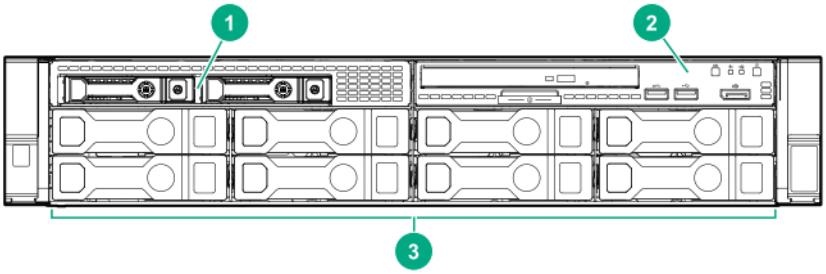

Item	Description
1	Drives (optional)
2	**LFF power switch module**
3	Drive bays

LFF power switch module components

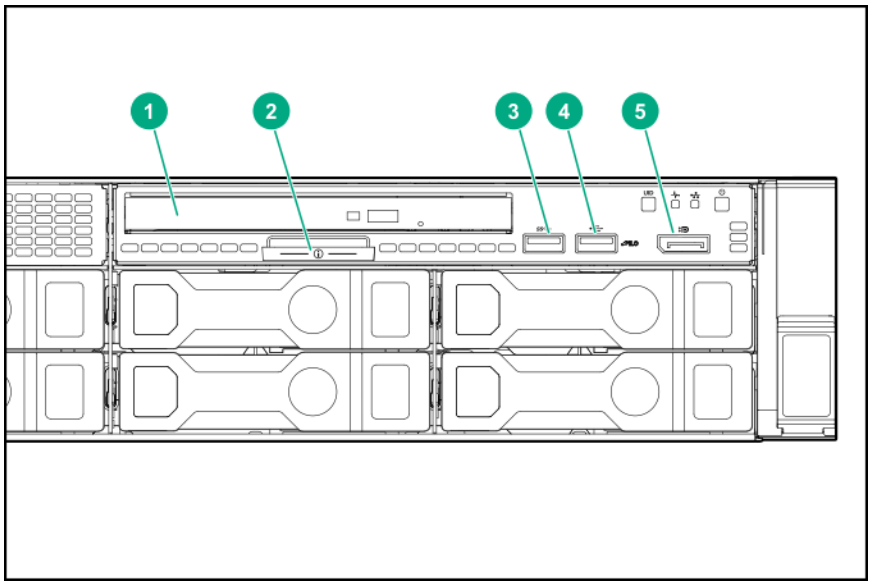

Item	Description
1	Optical disc drive
2	Serial label pull tab
3	USB 3.1 Gen1 port
4	iLO service port
5	Video display port

Front panel LEDs and buttons

SFF front panel LEDs and button

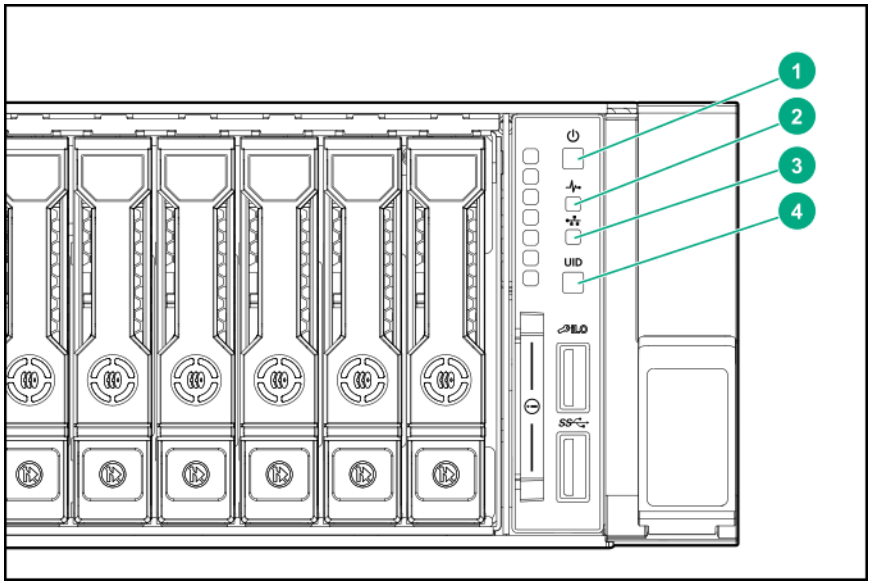

Item	Description	Status
1	Power On/Standby button and system power LED[1]	• Solid green = System on • Flashing green (1 Hz/cycle per sec) = Performing power on sequence • Solid amber = System in standby • Off = No power present[2]
2	Health LED[1]	• Solid green = Normal • Flashing green (1 Hz/cycle per sec) = iLO is rebooting • Flashing amber = System degraded • Flashing red (1 Hz/cycle per sec) = System critical[3]

Table Continued

Item	Description	Status
3	NIC status LED[1]	• Solid green = Link to network • Flashing green (1 Hz/cycle per sec) = Network active • Off = No network activity
4	UID button/LED[1]	• Solid blue = Activated • Flashing blue: ◦ 1 Hz/cycle per sec = Remote management or firmware upgrade in progress ◦ 4 Hz/cycle per sec = iLO manual reboot sequence initiated ◦ 8 Hz/cycle per sec = iLO manual reboot sequence in progress ◦ Off = Deactivated

1 When all four LEDs described in this table flash simultaneously, a power fault has occurred.

2 Facility power is not present, the power cord is not attached, no power supplies are installed, power supply failure has occurred, or the power button cable is disconnected.

3 If the health LED indicates a degraded or critical state, review the system IML or use iLO to review the system health status.

12 LFF front panel LEDs and button

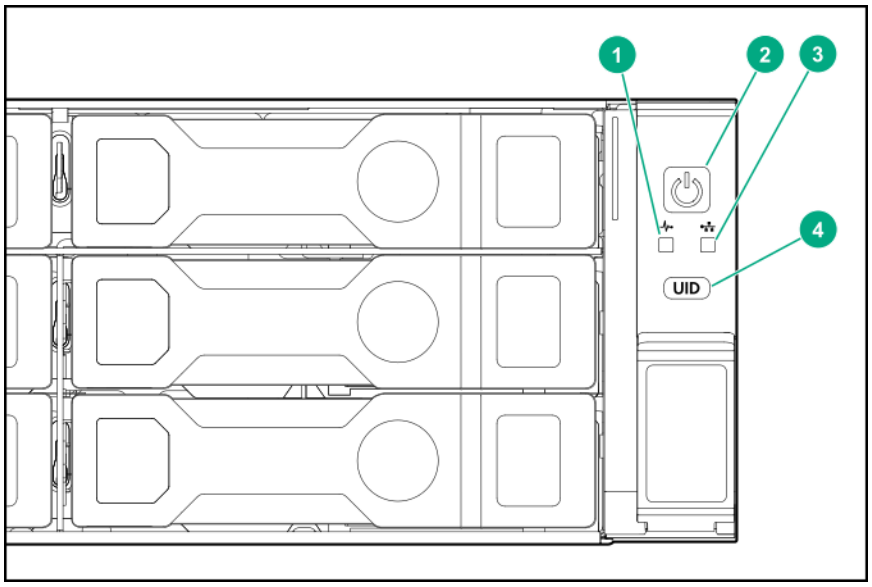

Item	Description	Status
1	Health LED[1]	• Solid green = Normal • Flashing green (1 Hz/cycle per sec) = iLO is rebooting • Flashing amber = System degraded • Flashing red (1 Hz/cycle per sec) = System critical[2]
2	Power On/Standby button and system power LED[1]	• Solid green = System on • Flashing green (1 Hz/cycle per sec) = Performing power on sequence • Solid amber = System in standby • Off = No power present[3]
3	NIC status LED[1]	• Solid green = Link to network • Flashing green (1 Hz/cycle per sec) = Network active • Off = No network activity
4	UID button/LED[1]	• Solid blue = Activated • Flashing blue: ◦ 1 Hz/cycle per sec = Remote management or firmware upgrade in progress ◦ 4 Hz/cycle per sec = iLO manual reboot sequence initiated ◦ 8 Hz/cycle per sec = iLO manual reboot sequence in progress • Off = Deactivated

1 When all four LEDs described in this table flash simultaneously, a power fault has occurred.

2 If the health LED indicates a degraded or critical state, review the system IML or use iLO to review the system health status.

3 Facility power is not present, the power cord is not attached, no power supplies are installed, power supply failure has occurred, or the power button cable is disconnected.

LFF power switch module LEDs and button

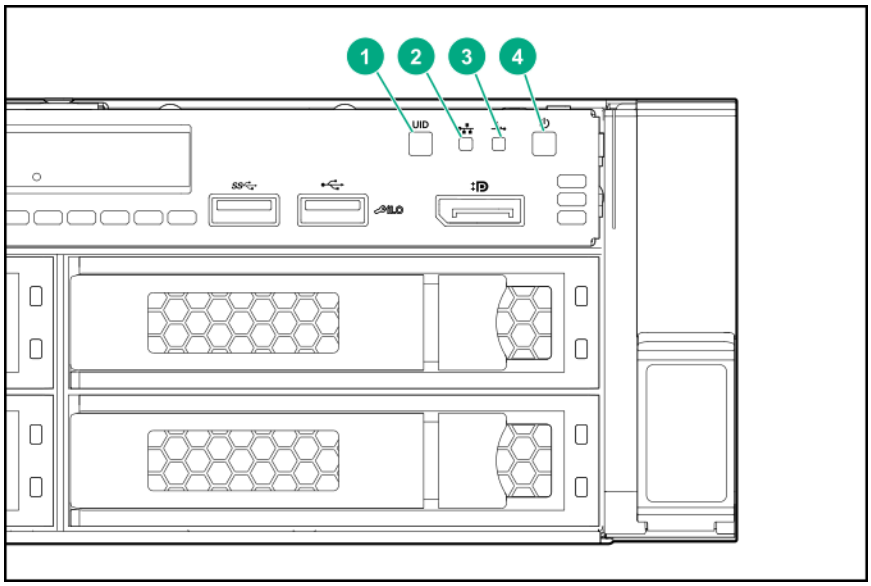

Item	Description	Status
1	UID button/LED[1]	• Solid blue = Activated • Flashing blue: ◦ 1 Hz/cycle per sec = Remote management or firmware upgrade in progress ◦ 4 Hz/cycle per sec = iLO manual reboot sequence initiated ◦ 8 Hz/cycle per sec = iLO manual reboot sequence in progress • Off = Deactivated
2	NIC status LED[1]	• Solid green = Link to network • Flashing green (1 Hz/cycle per sec) = Network active • Off = No network activity

Table Continued

Item	Description	Status
3	Health LED[1]	• Solid green = Normal • Flashing green (1 Hz/cycle per sec) = iLO is rebooting • Flashing amber = System degraded • Flashing red (1 Hz/cycle per sec) = System critical[2]
4	Power On/Standby button and system power LED[1]	• Solid green = System on • Flashing green (1 Hz/cycle per sec) = Performing power on sequence • Solid amber = System in standby • Off = No power present[3]

1 When all four LEDs described in this table flash simultaneously, a power fault has occurred.

2 If the health LED indicates a degraded or critical state, review the system IML or use iLO to review the system health status.

3 Facility power is not present, the power cord is not attached, no power supplies are installed, power supply failure has occurred, or the power button cable is disconnected.

UID button functionality

The UID button can be used to display the Server Health Summary when the server will not power on. For more information, see the latest *HPE iLO 5 User Guide* on the **Hewlett Packard Enterprise website**.

Power fault LEDs

The following table provides a list of power fault LEDs, and the subsystems that are affected. Not all power faults are used by all servers.

Subsystem	LED behavior
System board	1 flash
Processor	2 flashes
Memory	3 flashes
Riser board PCIe slots	4 flashes
FlexibleLOM	5 flashes
Removable HPE Flexible Smart Array controller	6 flashes
System board PCIe slots	7 flashes
Power backplane or storage backplane	8 flashes
Power supply	9 flashes

Systems Insight Display LEDs

The Systems Insight Display LEDs represent the system board layout. The display enables diagnosis with the access panel installed.

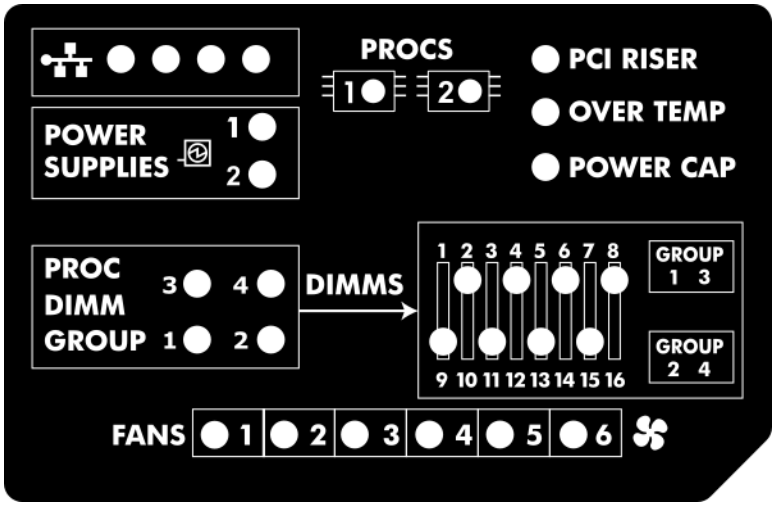

Description	Status
Processor LEDs	• Off = Normal • Amber = Failed processor
DIMM LEDs	• Off = Normal • Amber = Failed DIMM or configuration issue
Fan LEDs	• Off = Normal • Amber = Failed fan or missing fan
NIC LEDs[1]	• Off = No link to network • Solid green = Network link • Flashing green = Network link with activity If power is off, the front panel LED is not active. For status, see **Rear panel LEDs**.
Power supply LEDs	• Off = Normal • Solid amber = Power subsystem degraded, power supply failure, or input power lost
PCI riser LED	• Off = Normal • Amber = Incorrectly installed PCI riser cage
Over temp LED	• Off = Normal • Amber = High system temperature detected

Table Continued

Description	Status
AMP status LED	• Off = AMP modes disabled • Solid green = AMP mode enabled • Solid amber = Failover • Flashing amber = Invalid configuration
Power cap LED	• Off = System is in standby, or no cap is set • Solid green = Power cap applied

[1] For Networking Choice server models, the embedded NIC ports are not equipped on the server. Therefore, the NIC LEDs on the Systems Insight Display will flash based on the FlexibleLOM network port activity. In the case of a dual-port FlexibleLOM, only NIC LED 1 and 2 will illuminate to correspond with the activity of the respective network ports.

When the health LED on the front panel illuminates either amber or red, the server is experiencing a health event. For more information on the combination of these LEDs, see **Systems Insight Display combined LED descriptions**.

Systems Insight Display combined LED descriptions

The combined illumination of the following LEDs indicates a system condition:

- Systems Insight Display LEDs
- System power LED
- Health LED

Systems Insight Display LED and color	Health LED	System power LED	Status
Processor (amber)	Red	Amber	One or more of the following conditions might exist: • Processor in socket X has failed. • Processor X is not installed in the socket. • Processor X is unsupported. • ROM detects a failed processor during POST.
Processor (amber)	Amber	Green	Processor in socket X is in a pre-failure condition.
DIMM (amber)	Red	Green	One or more DIMMs have failed.
DIMM (amber)	Amber	Green	DIMM in slot X is in a pre-failure condition.
Over temp (amber)	Amber	Green	The Health Driver has detected a cautionary temperature level.

Table Continued

Systems Insight Display LED and color	Health LED	System power LED	Status
Over temp (amber)	Red	Amber	The server has detected a hardware critical temperature level.
PCI riser (amber)	Red	Green	The PCI riser cage is not seated properly.
Fan (amber)	Amber	Green	One fan has failed or has been removed.
Fan (amber)	Red	Green	Two or more fans have failed or been removed.
Power supply (amber)	Red	Amber	One or more of the following conditions might exist: • Only one power supply is installed and that power supply is in standby. • Power supply fault. • System board fault.
Power supply (amber)	Amber	Green	One or more of the following conditions might exist: • Redundant power supply is installed and only one power supply is functional. • AC power cord is not plugged into redundant power supply. • Redundant power supply fault. • Power supply mismatch at POST or power supply mismatch through hot-plug addition.
Power cap (off)	—	Amber	Standby.
Power cap (green)	—	Flashing green	Waiting for power.
Power cap (green)	—	Green	Power is available.
Power cap (flashing amber)	—	Amber	Power is not available.

IMPORTANT: If more than one DIMM slot LED is illuminated, further troubleshooting is required. Test each bank of DIMMs by removing all other DIMMs. Isolate the failed DIMM by replacing each DIMM in a bank with a known working DIMM.

Rear panel components

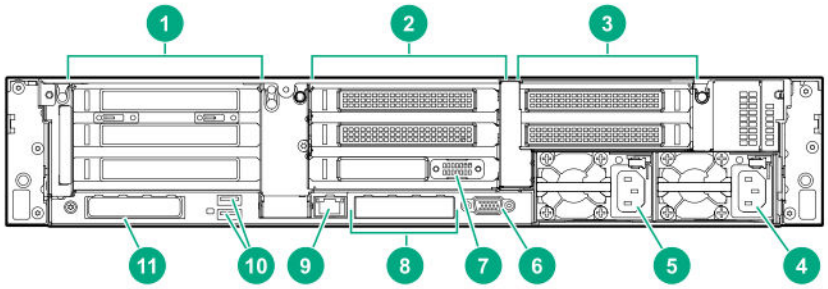

Item	Description
1	Primary riser slots 1–3 (optional drive cage)
2	Optional secondary riser slots 4–6 (optional drive cage)
3	Optional tertiary riser slots 7–8 (optional drive cage)
4	Power supply 1
5	Power supply 2
6	Video port
7	Serial port (optional)[1]
8	1Gb NIC ports (if equipped)
9	iLO management port
10	USB 3.1 Gen1 ports
11	FlexibleLOM slot

[1] When a tertiary riser cage is installed as shown, the serial port can be installed in the riser slot 6.

Rear panel LEDs

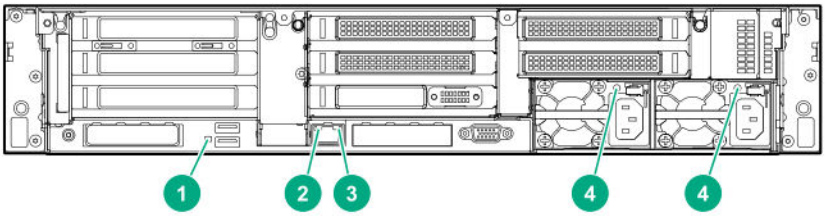

Item	Description	Status
1	UID LED	• Off = Deactivated • Solid blue = Activated • Flashing blue = System is being managed remotely.
2	Link LED	• Off = No network link • Green = Network link
3	Status LED	• Off = No network activity • Solid green = Link to network • Flashing green = Network activity
4	Power supply LEDs	• Off = System is off or power supply has failed. • Solid green = Normal

System board components

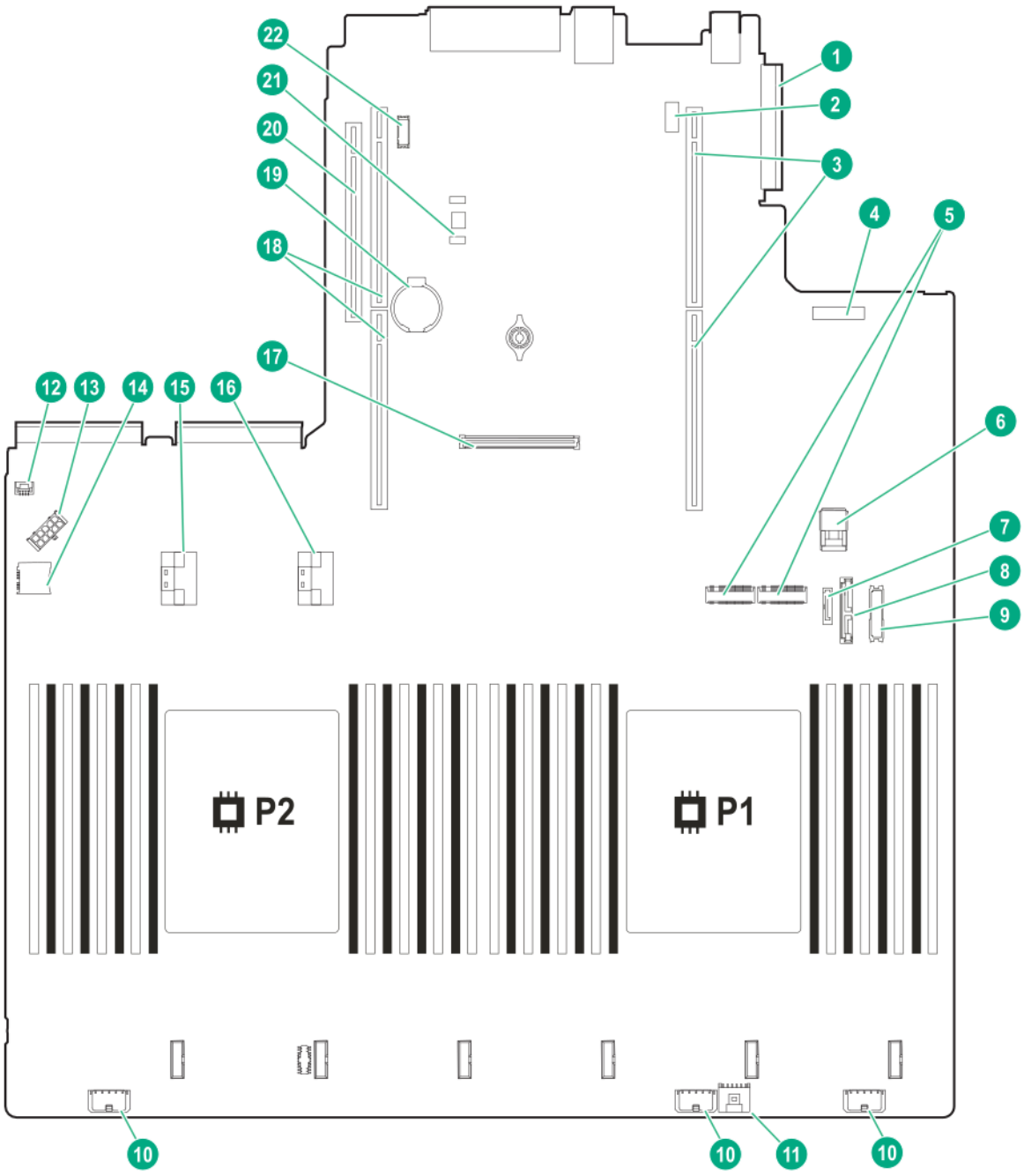

Item	Description
1	FlexibleLOM connector
2	System maintenance switch
3	Primary PCIe riser connector
4	Front display port/USB 2.0 connector

Table Continued

Item	Description
5	M.2 connectors
6	Internal USB 3.0 ports
7	x1 SATA port 4
8	Optical disc drive/SATA port 5
9	Power switch/SID module connector
10	Drive backplane power connectors
11	Energy pack connector
12	Chassis intrusion detection switch connector
13	Drive backplane power connector
14	microSD card slot
15	NVMe connector (port 7b)
16	NVMe connector (port 8b)
17	Smart Array modular controller connector
18	Secondary PCIe riser connector [1]
19	System battery
20	Tertiary PCIe riser connector[1]
21	TPM connector
22	Serial port connector

[1] The secondary and tertiary risers require a second processor.

System maintenance switch descriptions

Position	Default	Function
S1 [1]	Off	• Off = iLO security is enabled. • On = iLO security is disabled.
S2	Off	Reserved
S3	Off	Reserved
S4	Off	Reserved
S5	Off	• Off = Power-on password is enabled. • On = Power-on password is disabled.
S6 [2, 3]	Off	• Off = No function • On = Restore default manufacturing settings
S7	Off	Reserved

Table Continued

Position	Default	Function
S8	—	Reserved
S9	—	Reserved
S10	—	Reserved
S11	—	Reserved
S12	—	Reserved

1 To access the redundant ROM, set S1, S5, and S6 to On.

2 When the system maintenance switch position 6 is set to the On position, the system is prepared to restore all configuration settings to their manufacturing defaults.

3 When the system maintenance switch position 6 is set to the On position and Secure Boot is enabled, some configurations cannot be restored. For more information, see **Secure Boot**.

DIMM label identification

To determine DIMM characteristics, see the label attached to the DIMM. The information in this section helps you to use the label to locate specific information about the DIMM.

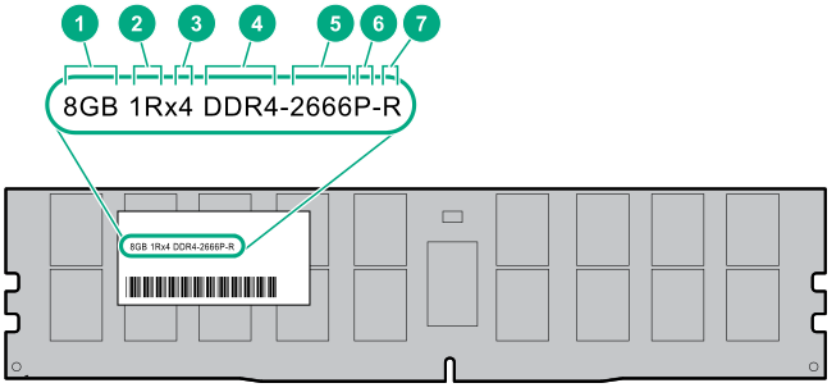

Item	Description	Example
1	Capacity	8 GB 16 GB 32 GB 64 GB 128 GB
2	Rank	1R = Single rank 2R = Dual rank 4R = Quad rank 8R = Octal rank

Table Continued

Item	Description	Example
3	Data width on DRAM	x4 = 4-bit x8 = 8-bit x16 = 16-bit
4	Memory generation	PC4 = DDR4
5	Maximum memory speed	2133 MT/s 2400 MT/s 2666 MT/s 2933 MT/s
6	CAS latency	P = CAS 15-15-15 T = CAS 17-17-17 U = CAS 20-18-18 V = CAS 19-19-19 (for RDIMM, LRDIMM) V = CAS 22-19-19 (for 3DS TSV LRDIMM) Y = CAS 21-21-21 (for RDIMM, LRDIMM) Y = CAS 24-21-21 (for 3DS TSV LRDIMM)
7	DIMM type	R = RDIMM (registered) L = LRDIMM (load reduced) E = Unbuffered ECC (UDIMM)

For more information about product features, specifications, options, configurations, and compatibility, see the HPE DDR4 SmartMemory QuickSpecs on the Hewlett Packard Enterprise website (**https://www.hpe.com/support/DDR4SmartMemoryQS**).

DIMM slot locations

DIMM slots are numbered sequentially (1 through 16) for each processor. The supported AMP modes use the letter assignments for population guidelines.



Processor and socket components

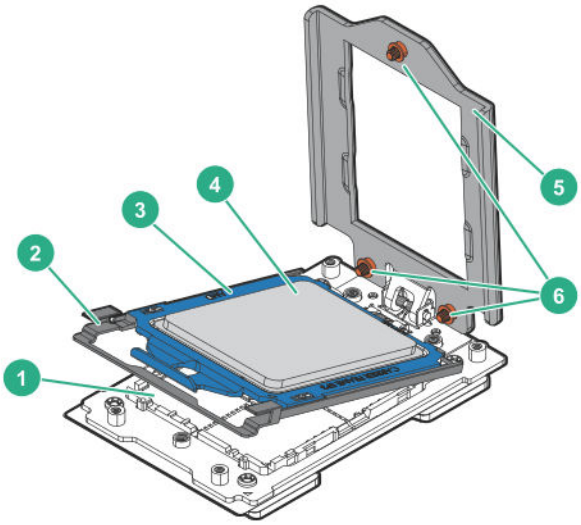

Item	Description
1	Pin field
2	Rail frame
3	Carrier frame
4	Processor
5	Force frame
6	Captive screws (Torx T-20)

Drive box identification

Front boxes

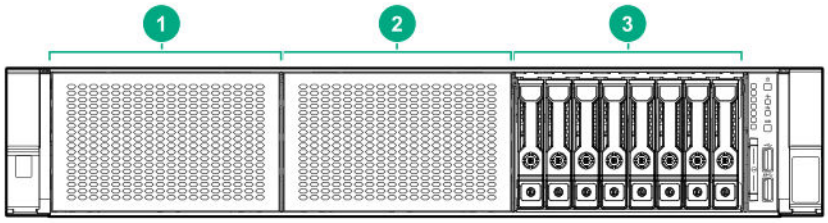

Item	Description
1	Box 1
2	Box 2
3	Box 3

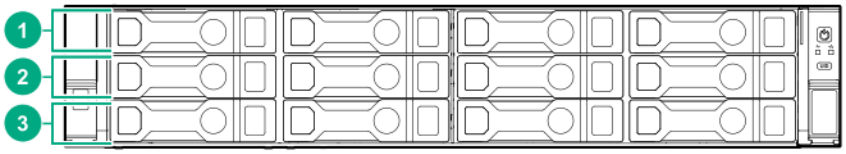

Item	Description
1	Box 1
2	Box 2
3	Box 3

Rear boxes

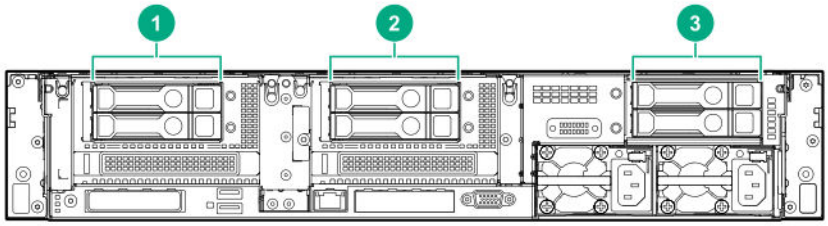

Item	Description
1	Box 4
2	Box 5
3	Box 6

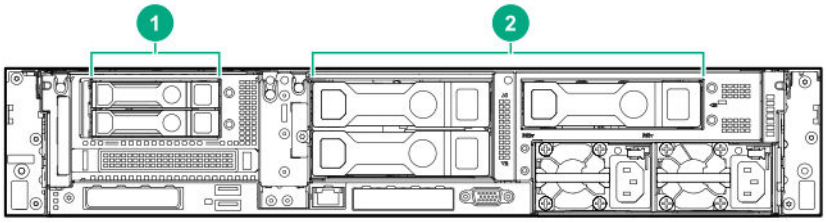

Item	Description
1	Box 4
2	Box 6

Midplane box (LFF only)

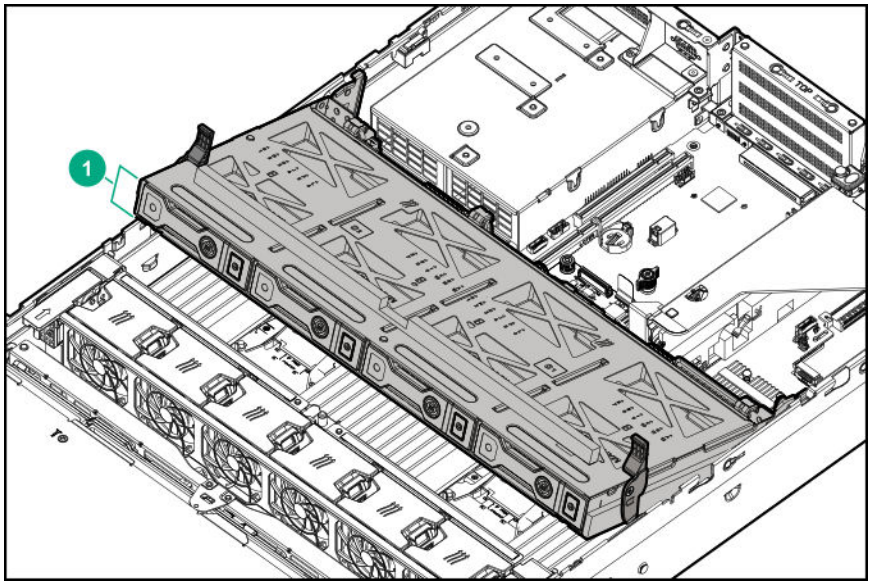

Item	Description
1	Box 7

Drive bay numbering

Drive bay numbering depends on how the drive backplanes are connected:

- To a controller:
  - Embedded controllers use the onboard SATA ports.
  - Type-a controllers install to the type-a smart array connector.
  - Type-p controllers install to a PCIe riser.
- To a SAS expander:

  Installs in the primary or secondary PCIe riser

Drive bay numbering: Smart Array controller

When the drive backplane is connected directly to a storage controller, then each drive box starts at 1. The following images are examples of common configurations.

24SFF

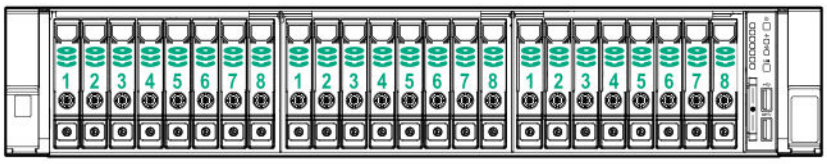

12LFF

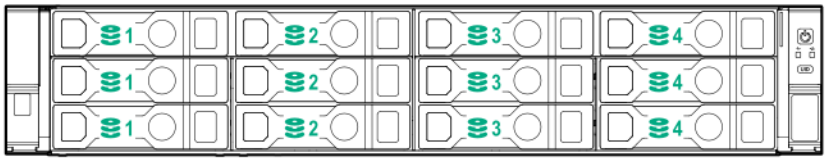

6SFF rear panel

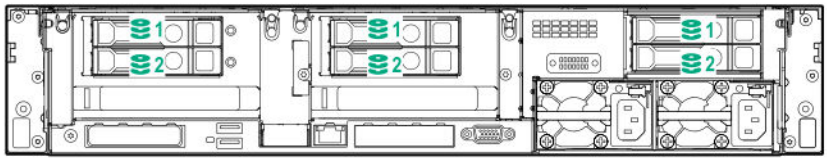

2SFF + 3LFF rear panel

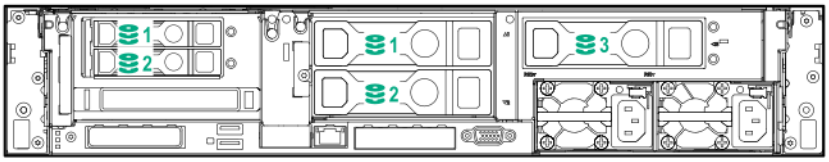

Universal media bay

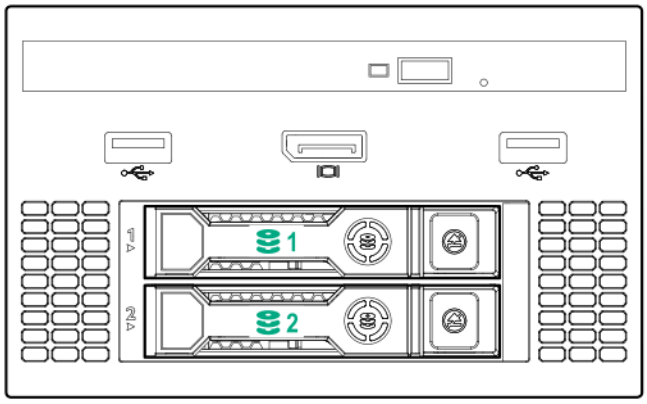

8LFF + Universal media bay, optional 2SFF, and optical drive

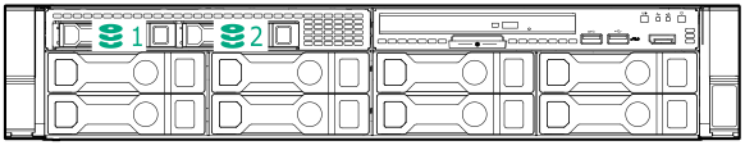

Midplane box

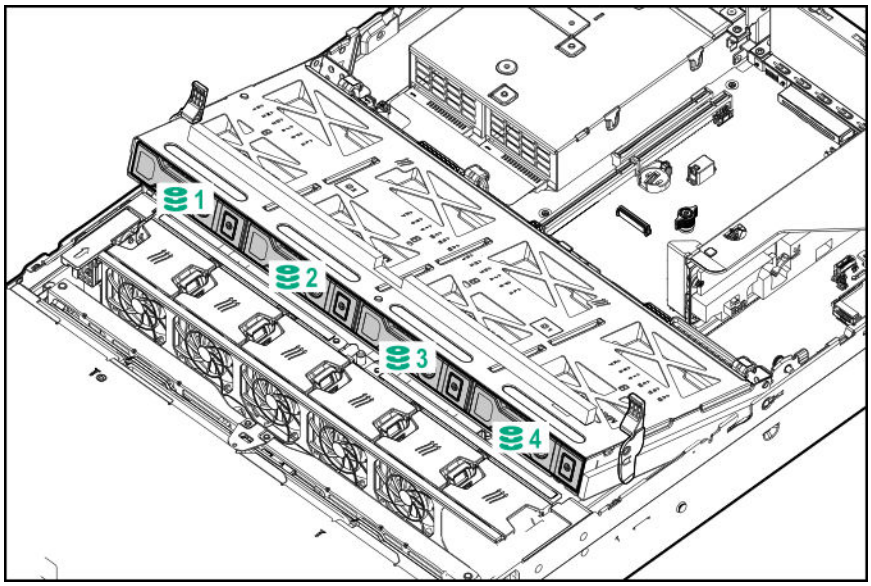

Drive bay numbering: SAS expander

Drive numbering through a SAS Expander is continuous:

- SAS expander port 1 always connects to port 1 of the controller.
- SAS expander port 2 always connects to port 2 of the controller.
- SAS expander port 3 = drive numbers 1 to 4.

- SAS expander port 4 = drive numbers 5 to 8.
- SAS expander port 5 = drive numbers 9 to 12.
- SAS expander port 6 = drive numbers 13 to 16.
- SAS expander port 7 = drive numbers 17 to 20.
- SAS expander port 8 = drive numbers 21 to 24.
- SAS expander port 9 = drive numbers 25 to 28.

Common configuration examples:

NVMe drives

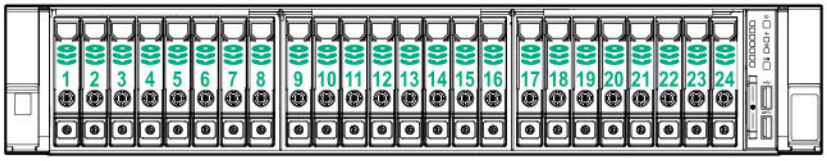

When any stacked 2SFF drive cage is connected to the SAS expander, the drive numbering skips the second number to allow **uFF drive bay numbering**. For example, when a rear 2SFF drive cage is connected to SAS expander port 9, then the drive numbers are 25 and 27.

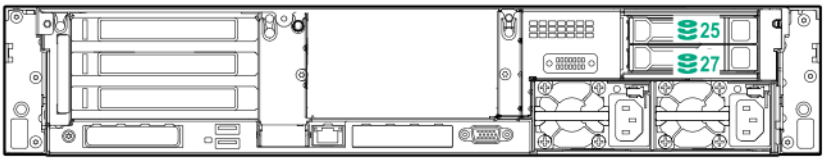

When the front 24SFF bays are populated, any installed rear 2SFF drives are always 25 and 27.

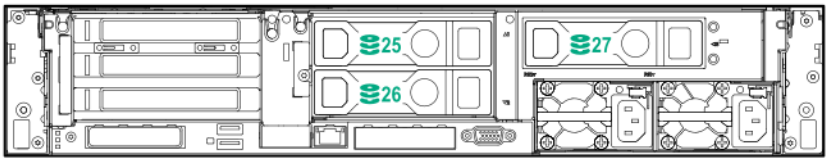

If a 2SFF drive cage is connected to SAS expander port 3, then the drive numbers are 1 and 3.

Universal media bay

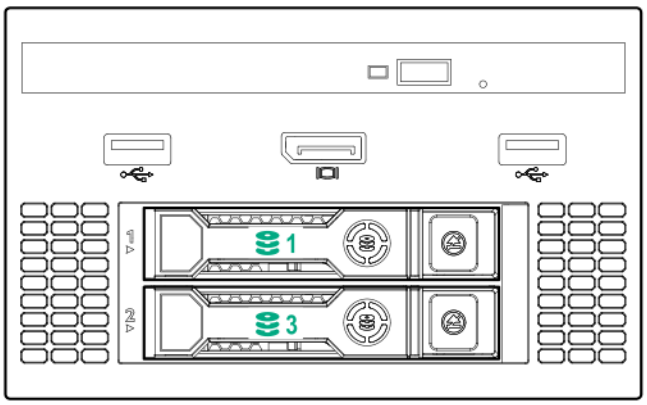

8LFF front panel

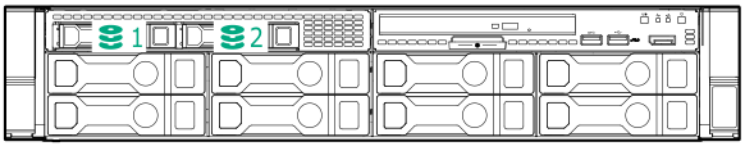

12LFF front panel

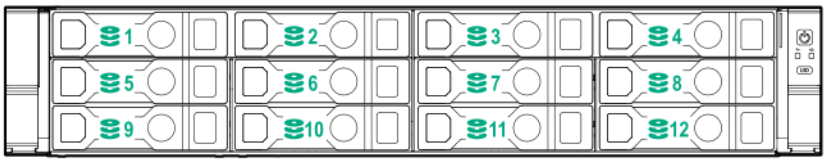

Midplane box (LFF only)

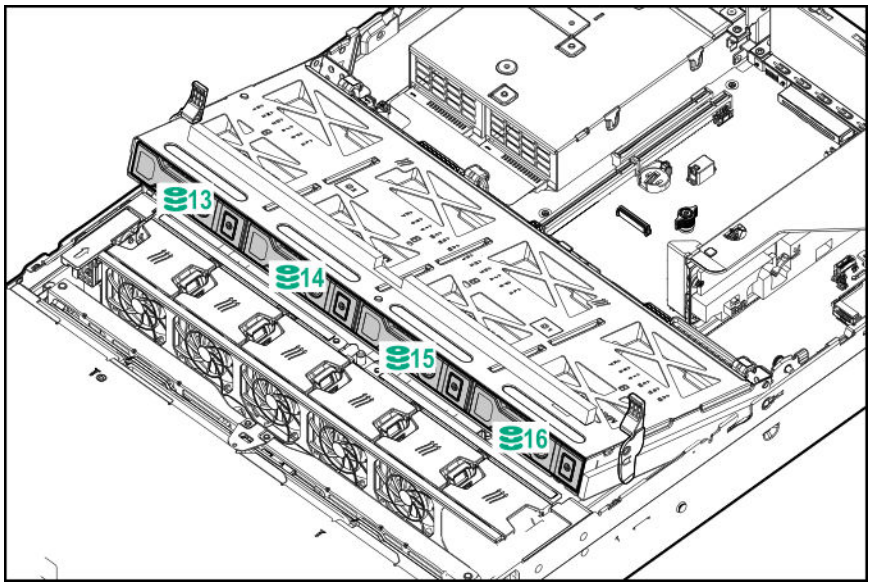

Front 12LFF + Midplane 4LFF + All rear 2SFF

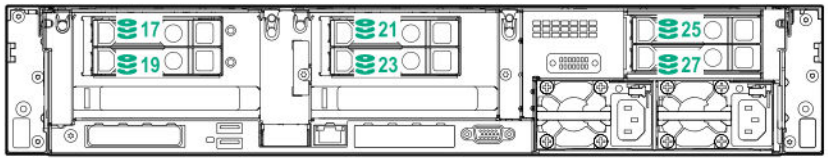

Drive bay numbering: NVMe drives

Server populated with NVMe drives and NVMe risers

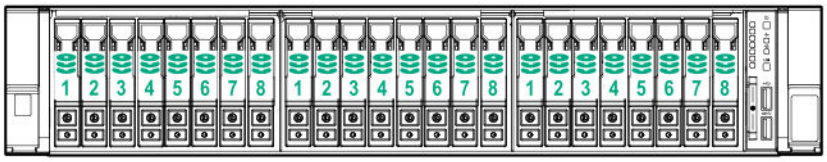

uFF drive bay numbering

There are two uFF drives in each drive carrier.

Drives connected to a controller

- The left bay = The default bay number of the server
- The right bay = The default bay number of the server + 100

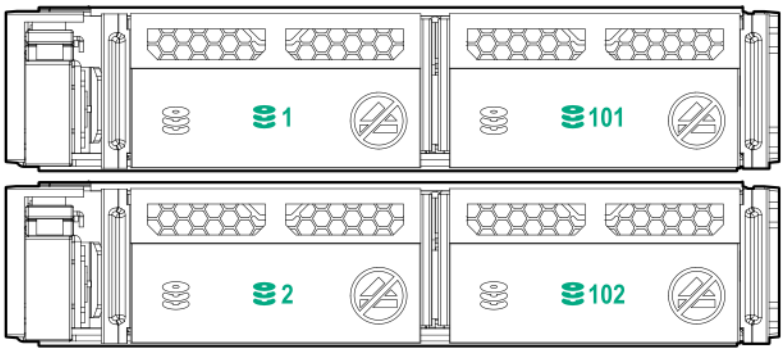

Drives connected to a SAS expander

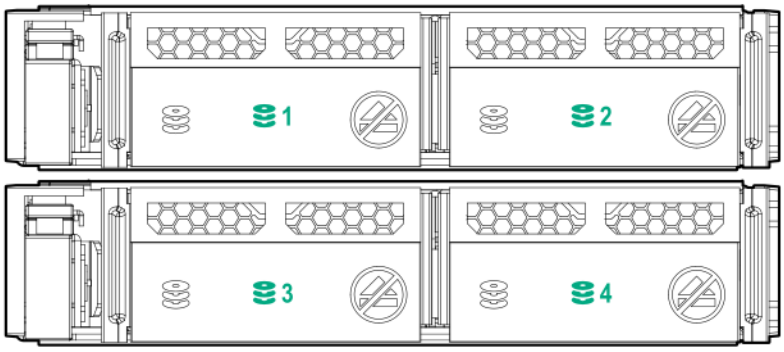

For example:

- If the drives are connected to port 3 of the SAS expander, then the uFF drives are 1 to 4.
- If the drives are connected to port 9 of the SAS expander, then the uFF drives are 25 to 28.

Drives

SAS/SATA drive components and LEDs

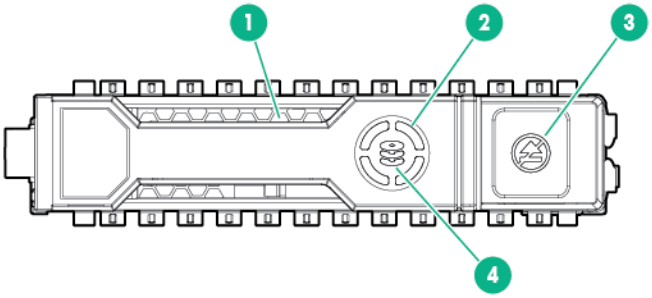

Item	Description	Status
1	Locate	• Solid blue = The drive is being identified by a host application. • Flashing blue = The drive carrier firmware is being updated or requires an update.
2	Activity ring LED	• Rotating green = Drive activity. • Off = No drive activity.

Table Continued

Item	Description	Status
3	Do not remove LED	• Solid white = Do not remove the drive. Removing the drive causes one or more of the logical drives to fail. • Off = Removing the drive does not cause a logical drive to fail.
4	Drive status LED	• Solid green = The drive is a member of one or more logical drives. • Flashing green = The drive is rebuilding or performing a RAID migration, strip size migration, capacity expansion, or logical drive extension, or is erasing. • Flashing amber/green = The drive is a member of one or more logical drives and predicts the drive will fail. • Flashing amber = The drive is not configured and predicts the drive will fail. • Solid amber = The drive has failed. • Off = The drive is not configured by a RAID controller.

Smart Carrier NVMe (SCN) drive LED definitions

The NVMe drive is a PCIe bus device. A device attached to a PCIe bus cannot be removed without allowing the device and bus to complete and cease the signal/traffic flow.

CAUTION: Do not remove an NVMe drive from the drive bay while the Do not remove LED is flashing. The Do not remove LED flashes to indicate that the device is still in use. Removing the NVMe drive before the device has completed and ceased signal/traffic flow can cause loss of data.

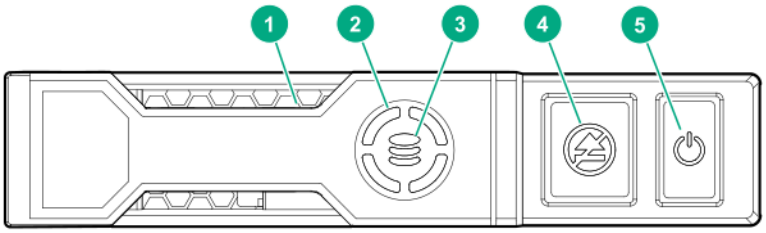

Item	LED	Status	Definition
1	Locate	Solid blue	The drive is being identified by a host application.
		Flashing blue	The drive carrier firmware is being updated or requires an update.
2	Activity ring	Rotating green	Drive activity
		Off	No drive activity

Table Continued

Item	LED	Status	Definition
3	Drive status	Solid green	The drive is a member of one or more logical drives.
		Flashing green	The drive is doing one of the following: • Rebuilding • Performing a RAID migration • Performing a stripe size migration • Performing a capacity expansion • Performing a logical drive extension • Erasing
		Flashing amber/ green	The drive is a member of one or more logical drives and predicts the drive will fail.
		Flashing amber	The drive is not configured and predicts the drive will fail.
		Solid amber	The drive has failed.
		Off	The drive is not configured by a RAID controller.
4	Do not remove	Solid white	Do not remove the drive. The drive must be ejected from the PCIe bus prior to removal.
		Flashing white	The drive ejection request is pending.
		Off	The drive has been ejected.
5	Power	Solid green	Do not remove the drive. The drive must be ejected from the PCIe bus prior to removal.
		Flashing green	The drive ejection request is pending.
		Off	The drive has been ejected.

NVMe SSD button actions

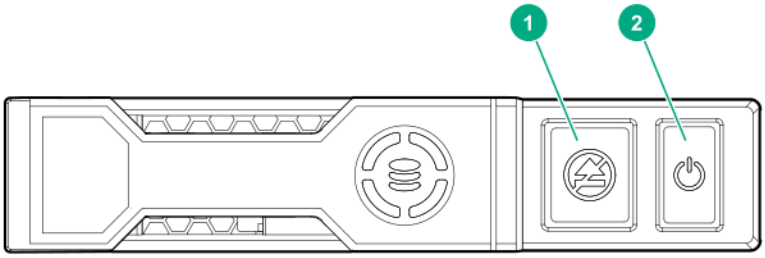

Item	Button	Action
1	Do Not Remove	Press to open the release lever.
2	Power	Press to request PCIe ejection. Removal request can be denied by the: • RAID controller (one or more of the logical drives could fail) • Operating system

uFF drive components and LEDs

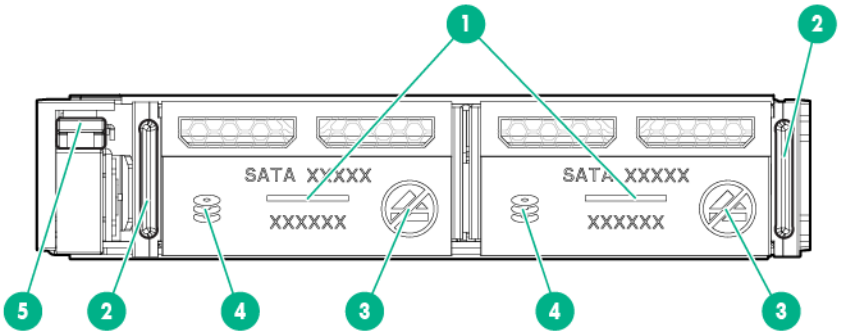

Item	Description	Status
1	Locate	• Off—Normal • Solid blue—The drive is being identified by a host application • Flashing blue—The drive firmware is being updated or requires an update
2	uFF drive ejection latch	Removes the uFF drive when released
3	Do not remove LED	• Off—OK to remove the drive. Removing the drive does not cause a logical drive to fail. • Solid white—Do not remove the drive. Removing the drive causes one or more of the logical drives to fail.

Table Continued

Item	Description	Status
4	Drive status LED	• Off—The drive is not configured by a RAID controller • Solid green—The drive is a member of one or more logical drives • Flashing green (4 Hz)—The drive is operating normally and has activity • Flashing green (1 Hz)—The drive is rebuilding or performing a RAID migration, stripe size migration, capacity expansion, logical drive extension, or is erasing • Flashing amber/green (1 Hz)—The drive is a member of one or more logical drives that predicts the drive will fail • Solid amber—The drive has failed • Flashing amber (1 Hz)—The drive is not configured and predicts the drive will fail
5	Adapter ejection release latch and handle	Removes the SFF flash adapter when released

DSC-25 2-port SFP28 card ports and LEDs

Ports

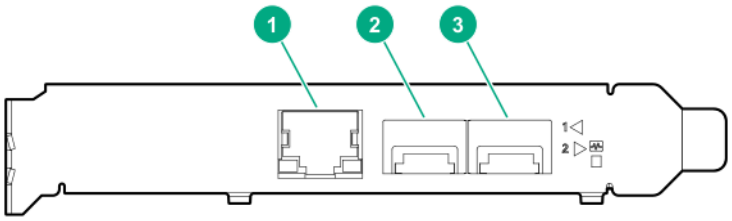

Table 1: Ports

Item	Port	Description
1	Management port	1GbE RJ45
2	Network interface port	10/25G SFP+ based
3	Network interface port	10/25G SFP+ based

LEDs

The HPE for Pensando DSP DSC-25 2p SFP28 card is a dual-port, single-slot, half-height, half-length (HHHL) SFP28 network adapter. It has LEDs for Link (L) and Activity (A) for each port. A half-height bracket is shown in the following illustration with SFP28 ports and LEDs.

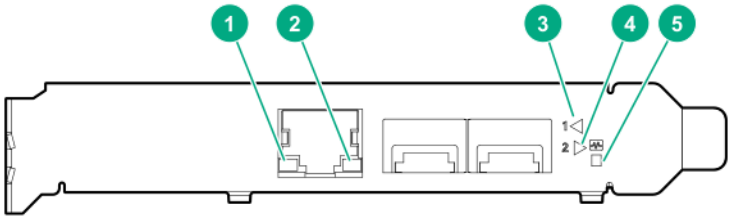

Table 2: LED indicators

Item	LED	Status	Description
1	Management Port Activity LED	Off	No activity
		Flashing	Passing traffic; flashing frequency indicates traffic intensity
2	Management Port Link LED	Off	A link has not been established
		Solid green	Valid Ethernet link
3	SFP Port 1 Link/Activity LED	Off	A link has not been established
		Solid green	Valid Ethernet link
		Flashing green	Passing traffic; flashing frequency indicates traffic intensity
		Solid amber	Link fault
4	SFP Port 2 Link/Activity LED	Off	A link has not been established
		Solid green	Valid Ethernet link
		Flashing green	Passing traffic; flashing frequency indicates traffic intensity
		Solid amber	Link fault
5	System status LED	Off	System is not powered
		Solid amber	Power is up, software has not booted yet
		Solid green	System is up and fully operational

Fan bay numbering

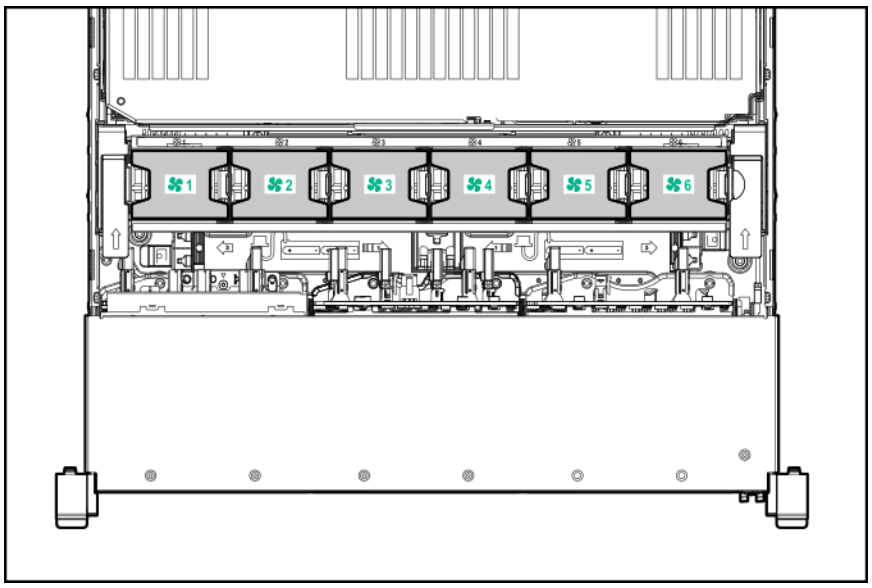

Operations

Power up the server

To power up the server, use one of the following methods:

- Press the Power On/Standby button.
- Use the virtual power button through iLO.

Power down the server

Before powering down the server for any upgrade or maintenance procedures, perform a backup of critical server data and programs.

IMPORTANT: When the server is in standby mode, auxiliary power is still being provided to the system.

To power down the server, use one of the following methods:

- Press and release the Power On/Standby button.

  This method initiates a controlled shutdown of applications and the OS before the server enters standby mode.
- Press and hold the Power On/Standby button for more than 4 seconds to force the server to enter standby mode.

  This method forces the server to enter standby mode without properly exiting applications and the OS. If an application stops responding, you can use this method to force a shutdown.
- Use a virtual power button selection through iLO.

  This method initiates a controlled remote shutdown of applications and the OS before the server enters standby mode.

Before proceeding, verify that the server is in standby mode by observing that the system power LED is amber.

Extending the server from the rack

WARNING: To reduce the risk of personal injury or equipment damage, be sure that the rack is adequately stabilized before extending anything from the rack.

Procedure

Pull down the quick release levers on each side of the server, and then extend the server from the rack.

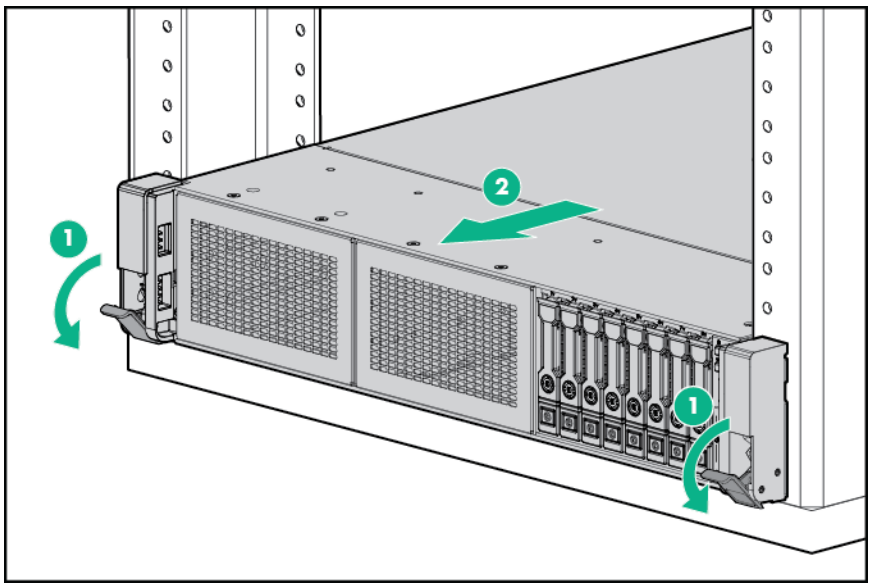

Removing the server from the rack

To remove the server from a Hewlett Packard Enterprise, Compaq-branded, Telco, or third-party rack:

Procedure

1. **Power down the server**.
2. **Extend the server from the rack**.
3. Disconnect the cabling and remove the server from the rack.
   For more information, see the documentation that ships with the rack mounting option.
4. Place the server on a sturdy, level surface.

Secure cables using the cable management arm

For rack rail installation instructions, see the documentation that ships with the rack rails.

WARNING: To reduce the risk of electric shock, fire, or damage to the equipment:

- Do not insert wrong connectors into ports.
- Do not disable the power cord grounding plug. The grounding plug is an important safety feature.
- Plug the power cord into a grounded (earthed) electrical outlet that is easily accessible at all times.
- Unplug the power cord from the power supply to disconnect power to the equipment.
- Do not route the power cord where it can be walked on or pinched by items placed against it. Pay particular attention to the plug, electrical outlet, and the point where the cord extends from the server.

Procedure

1. After the server is racked, connect any peripheral devices to the server.

To identify components, see "Rear panel components".

2. At the rear of the server, plug in the power cord to the power supply.
3. Install the power cord anchors.

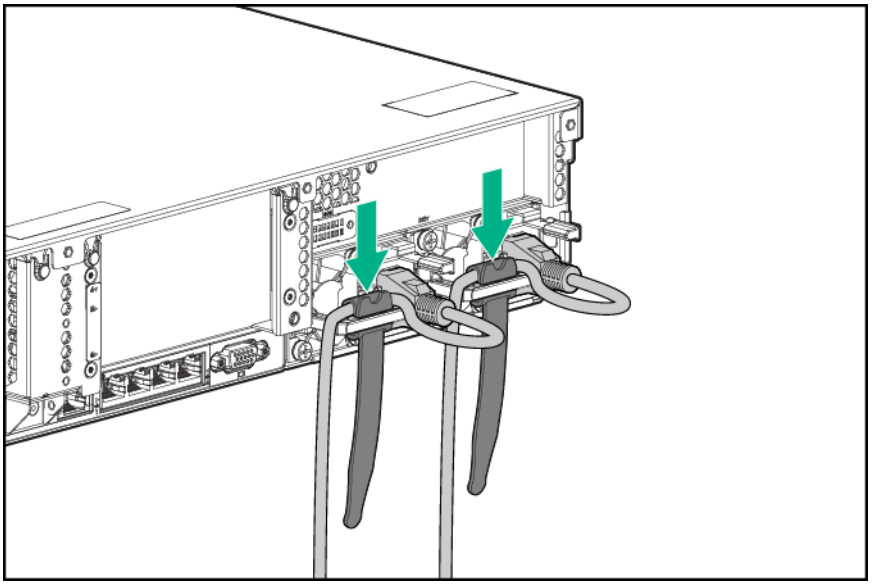

4. Secure the cables to the cable management arm.

IMPORTANT: Leave enough slack in each of the cables to prevent damage to the cables when the server is extended from the rack.

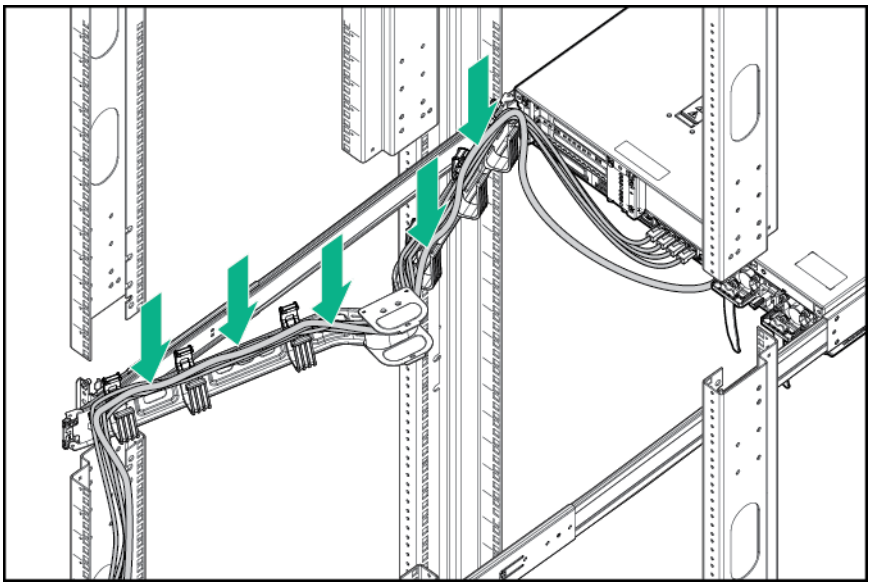

5. Connect the power cord to the AC power source.

Remove the access panel

WARNING: To reduce the risk of personal injury from hot surfaces, allow the drives, power supplies, and internal system components to cool before touching them.

CAUTION: Do not operate the chassis for long periods with the access panel open or removed. Operating the chassis in this manner results in improper airflow and improper cooling that can lead to thermal damage.

Procedure

1. **Power down the server**.
2. **Extend the server from the rack**.
3. Open or unlock the locking latch, slide the access panel to the rear of the chassis, and remove the access panel.

Install the access panel

Procedure

1. Place the access panel on top of the server with the latch open.
   Allow the panel to extend past the rear of the server approximately 1.25 cm (0.5 in).
2. Push down on the latch.
   The access panel slides to a closed position.
3. Tighten the security screw on the latch, if needed.

Removing the fan cage

CAUTION: Do not operate the server for long periods with the access panel open or removed. Operating the server in this manner results in improper airflow and improper cooling that can lead to thermal damage.

IMPORTANT: For optimum cooling, install fans in all primary fan locations.

Procedure

1. **Power down the server**.
2. Do one of the following:
   - Disconnect each power cord from the power source.
   - Disconnect each power cord from the server.
3. Do one of the following:
   - **Extend the server from the rack**.
   - **Remove the server from the rack**.
4. **Remove the access panel**.
5. **Remove the air baffle**.
6. Remove the fan cage.

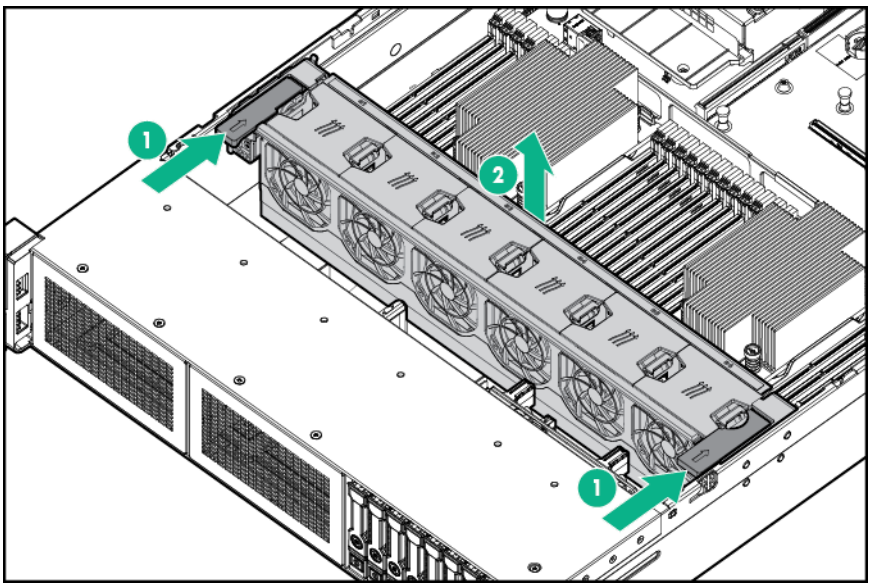

Installing the fan cage

CAUTION: Do not operate the server for long periods with the access panel open or removed. Operating the server in this manner results in improper airflow and improper cooling that can lead to thermal damage.

IMPORTANT: For optimum cooling, install fans in all primary fan locations.

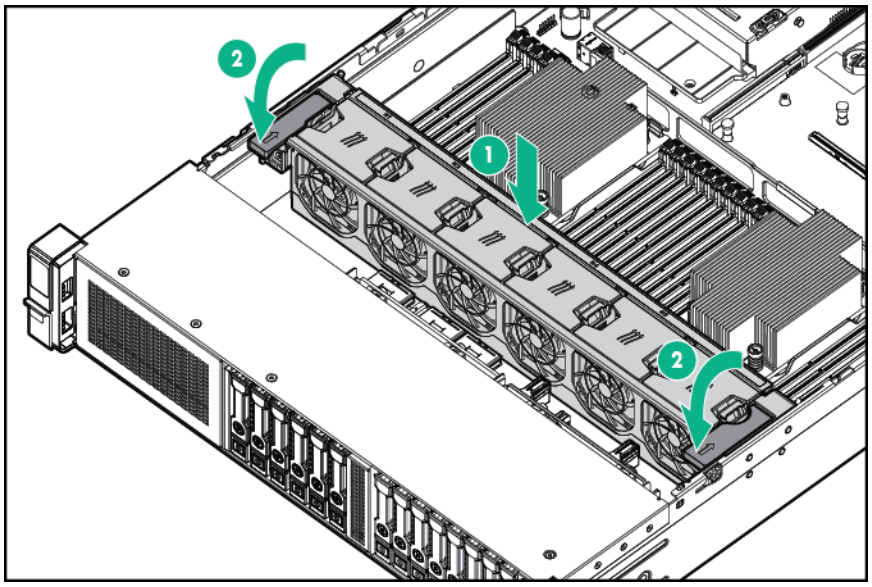

Removing the air baffle or midplane drive cage

CAUTION: Do not detach the cable that connects the battery pack to the cache module. Detaching the cable causes any unsaved data in the cache module to be lost.

CAUTION: For proper cooling, do not operate the server without the access panel, baffles, expansion slot covers, or blanks installed. If the server supports hot-plug components, minimize the amount of time the access panel is open.

Procedure

1. **Power down the server**.
2. Remove all power:
   a. Disconnect each power cord from the power source.
   b. Disconnect each power cord from the server.
3. Do one of the following:
   - **Extend the server from the rack**.
   - **Remove the server from the rack**.
4. **Remove the access panel**.
5. Do one of the following:
   - Remove the air baffle.

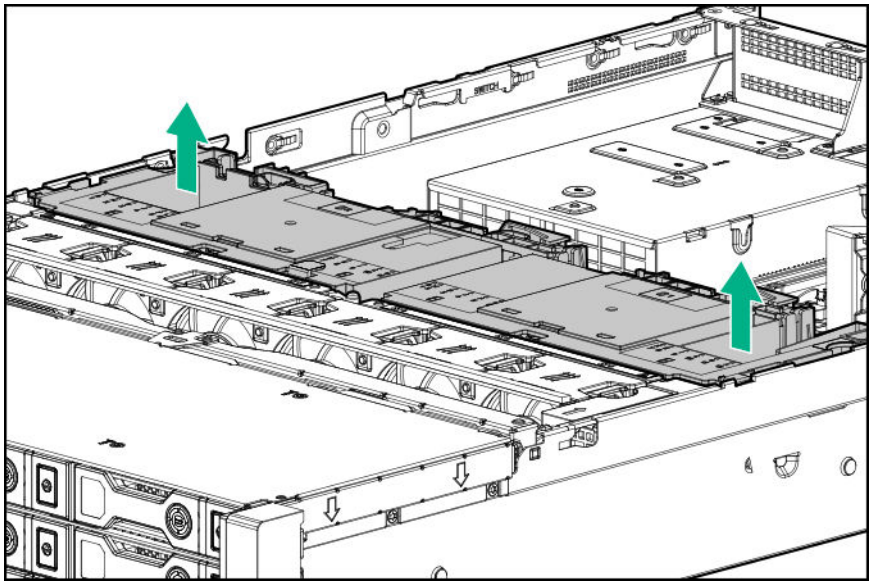

   - Remove the 4LFF midplane drive cage:
     a. Disconnect all cables.
     b. Remove all drives.

        Be sure to note the location of each drive.
     c. Remove the drive cage.

CAUTION: Do not drop the drive cage on the system board. Dropping the drive cage on the system board might damage the system or components. Remove all drives and use two hands when installing or removing the drive cage.

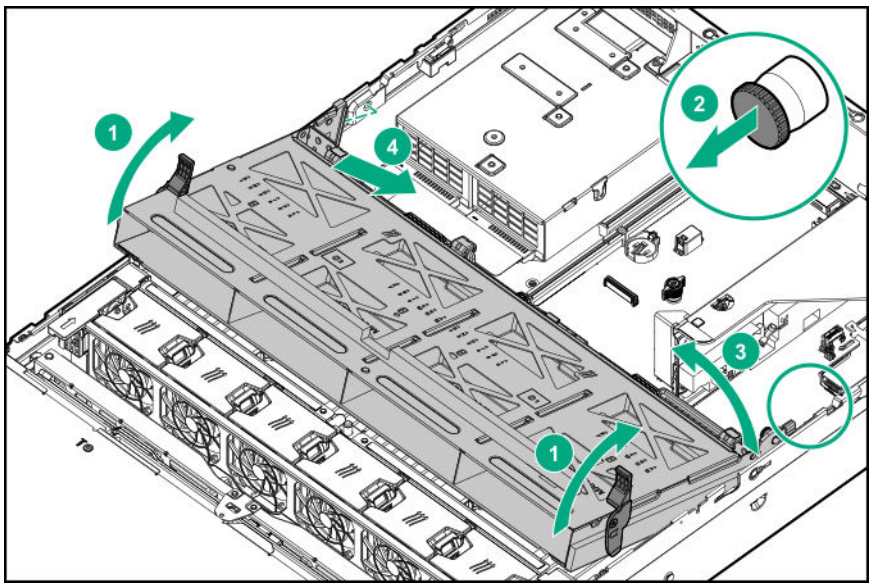

Installing the air baffle

Procedure

1. Observe the following alerts.

   CAUTION: For proper cooling, do not operate the server without the access panel, baffles, expansion slot covers, or blanks installed. If the server supports hot-plug components, minimize the amount of time the access panel is open.

   CAUTION: Do not detach the cable that connects the battery pack to the cache module. Detaching the cable causes any unsaved data in the cache module to be lost.

2. Install the air baffle.

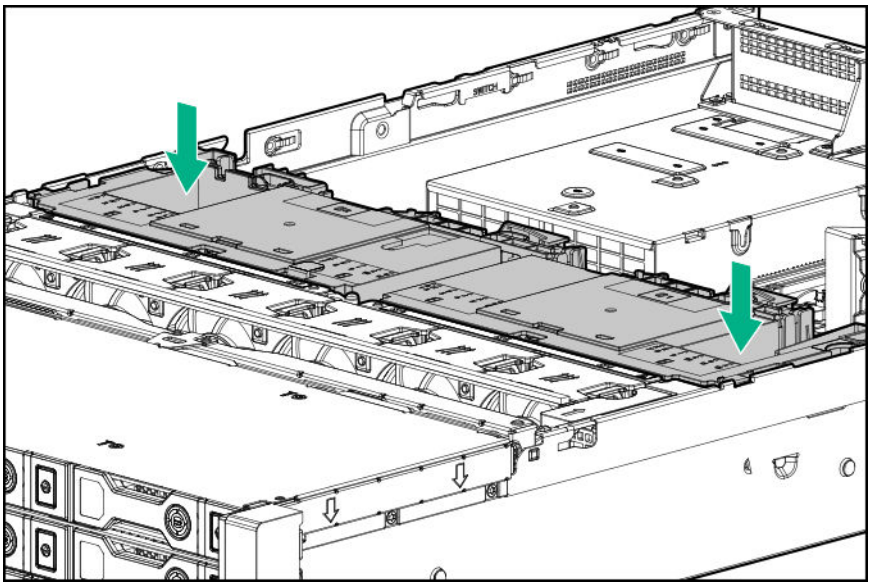

Removing a riser cage

CAUTION: To prevent damage to the server or expansion boards, power down the server and remove all AC power cords before removing or installing the PCI riser cage.

Procedure

1. **Power down the server**.
2. Remove all power:
   a. Disconnect each power cord from the power source.
   b. Disconnect each power cord from the server.
3. Do one of the following:
   - **Extend the server from the rack**.
   - **Remove the server from the rack**.
4. **Remove the access panel**.
5. Remove the riser cage:
   - Primary and secondary riser cages

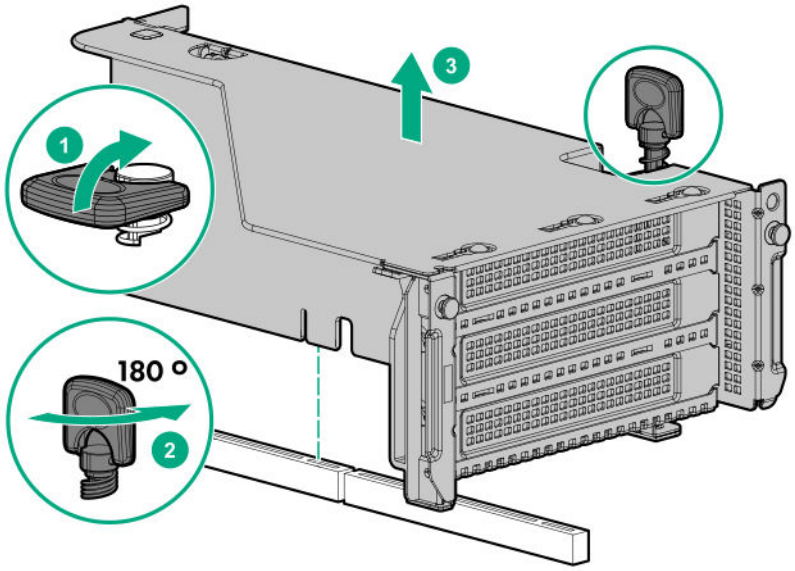

   - Tertiary riser cage

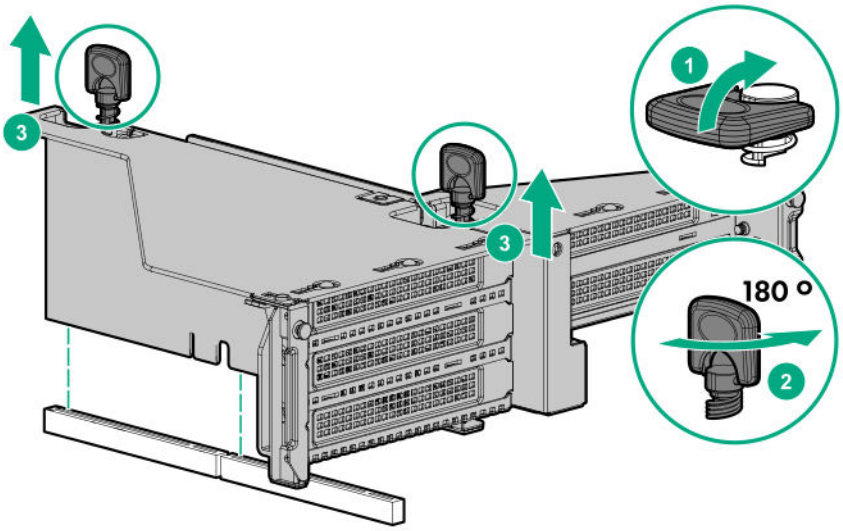

Removing a riser slot blank

CAUTION: To prevent improper cooling and thermal damage, do not operate the server unless all PCI slots have either an expansion slot cover or an expansion board installed.

Procedure

1. **Power down the server**.
2. Remove all power:
   a. Disconnect each power cord from the power source.
   b. Disconnect each power cord from the server.
3. Do one of the following:
   - **Extend the server from the rack**.
   - **Remove the server from the rack**.
4. **Remove the access panel**.
5. **Remove the riser cage**.
6. Remove the blank.

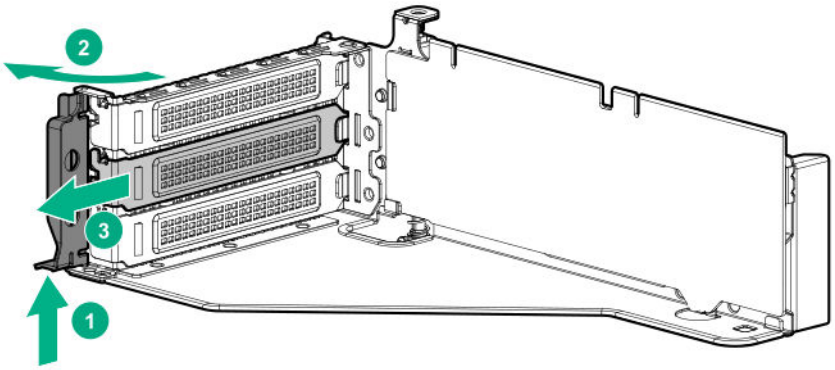

Removing the hard drive blank

Remove the component as indicated.

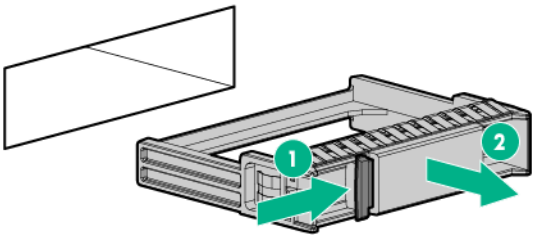

Accessing the Systems Insight Display

The Systems Insight Display is supported only on SFF models.

Procedure

1. Press and release the panel.
2. After the display fully ejects, rotate the display to view the LEDs.

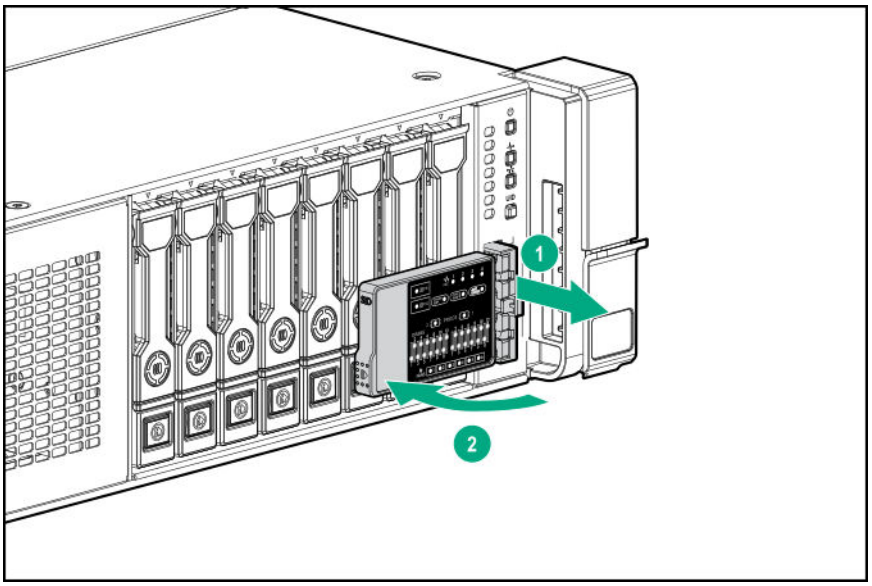

Accessing the product rear panel

Procedure

If installed, release the cable management arm and then swing the arm away from the rack.

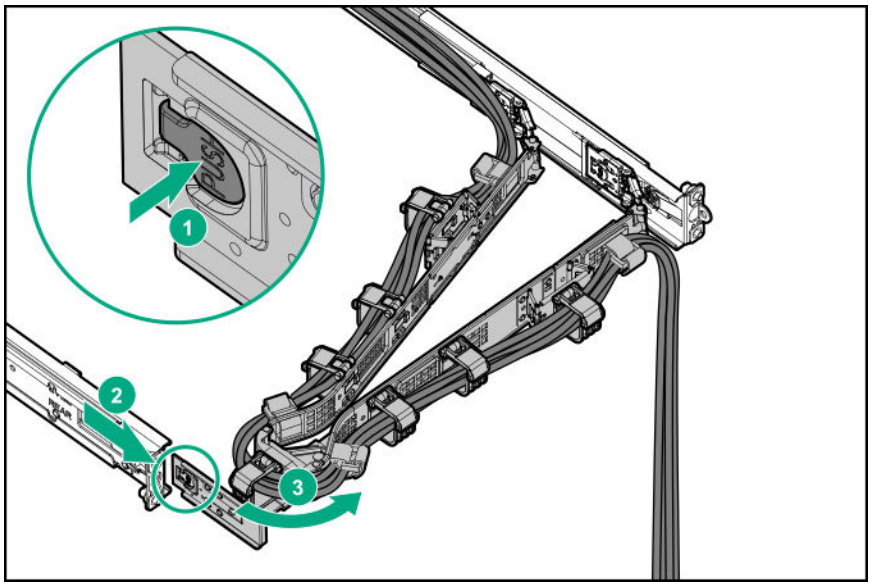

Accessing the product rear panel

Procedure

If installed, release the cable management arm and then swing the arm away from the rack.

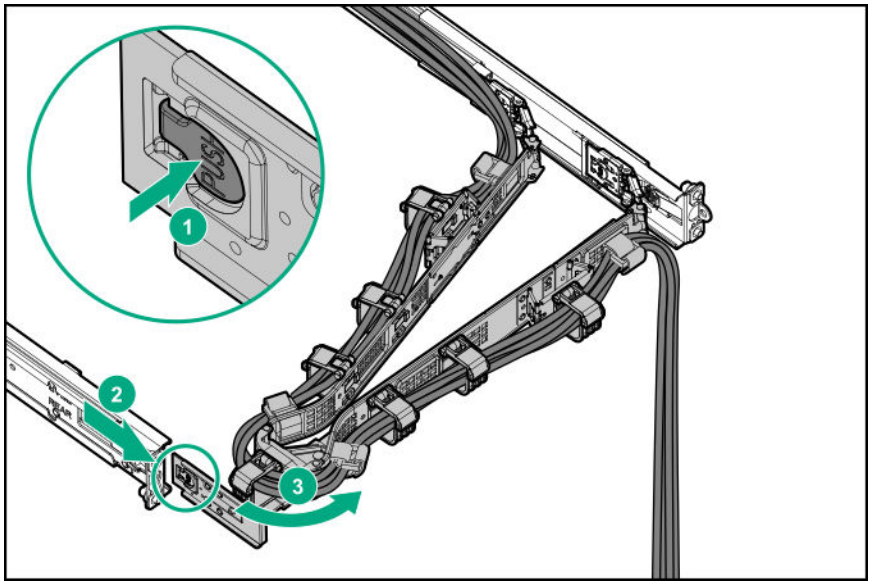

Optional service

Delivered by experienced, certified engineers, Hewlett Packard Enterprise support services help you keep your servers up and running with support packages tailored specifically for HPE ProLiant systems. Hewlett Packard Enterprise support services let you integrate both hardware and software support into a single package. A number of service level options are available to meet your business and IT needs.

Hewlett Packard Enterprise support services offer upgraded service levels to expand the standard product warranty with easy-to-buy, easy-to-use support packages that will help you make the most of your server investments. Some of the Hewlett Packard Enterprise support services for hardware, software or both are:

- Foundation Care – Keep systems running.
  - 6-Hour Call-to-Repair[1]
  - 4-Hour 24x7
  - Next Business Day
- Proactive Care – Help prevent service incidents and get you to technical experts when there is one.
  - 6-Hour Call-to-Repair[1]
  - 4-Hour 24x7
  - Next Business Day
- Deployment service for both hardware and software
- Hewlett Packard Enterprise Education Services – Help train your IT staff.

[1]The time commitment for this repair service might vary depending on the geographical region of site. For more service information available in your site, contact your local **Hewlett Packard Enterprise support center**.

For more information on Hewlett Packard Enterprise support services, see the **Hewlett Packard Enterprise website**.

Initial system installation

Depending on your technical expertise and the complexity of the product, for the initial system installation, select one of the following options:

- **Ordering the HPE Installation Service**
- **Setting up the server**

HPE Installation Service

HPE Installation Service provides basic installation of Hewlett Packard Enterprise branded equipment, software products, as well as HPE-supported products from other vendors that are sold by HPE or by HPE authorized resellers. The Installation Service is part of a suite of HPE deployment services that are designed to give users the peace of mind that comes from knowing that their HPE and HPE-supported products have been installed by an HPE specialist.

The HPE Installation Service provides the following benefits:

- Installation by an HPE authorized technical specialist.
- Verification prior to installation that all service prerequisites are met.
- Delivery of the service at a mutually scheduled time convenient to your organization.
- Allows your IT resources to stay focused on their core tasks and priorities.
- Full coverage during the warranty period for products that require installation by an HPE authorized technical specialist.

For more information on the features, limitations, provisions, and ordering information of the HPE Installation Service, see this Hewlett Packard Enterprise website:

https://www.hpe.com/support/installation-service

Setting up the server

Prerequisites

Before setting up the server:

- Download the latest SPP:

  https://www.hpe.com/servers/spp/download

  Support validation required
- Verify that your OS or virtualization software is supported:

  https://www.hpe.com/info/ossupport
- Read the HPE UEFI requirements for ProLiant servers on the HPE website:

  https://www.hpe.com/support/Gen10UEFI

  If the UEFI requirements are not met, you might experience boot failures or other errors when installing the operating system.
- Obtain the storage driver if needed:
  - Download it from the HPE Support Center website:

    https://www.hpe.com/support/hpesc
  - Extract it from the SPP.
- Read the operational requirements for the server:

  Operational requirements
- Read the safety and compliance information on the HPE website:

  https://www.hpe.com/support/safety-compliance-enterpriseproducts

Procedure

Unbox the server

1. Unbox the server and verify the contents:
   - Server
   - Power cord

- Rack-mounting hardware
- Documentation

The server does not ship with OS media. All system software and firmware is preloaded on the server.

Install the hardware options

2. (Optional) Install hardware options. For installation instructions, see **Hardware options installation**.

Rack the server and connect the peripherals

3. Install the server in the rack. The racking procedures are included with the rack rails.
4. Connect the peripheral devices and power cords to the server.
5. **Secure the cables and power cords using the cable management arm**.
6. Decide how to manage the server:
   - Locally: Use a KVM switch or a connect a keyboard, monitor, and mouse.
   - Remotely: Connect to the iLO web interface and run a remote console:
     a. Verify the following:
        - iLO is licensed to use the remote console feature.

          If iLO is not licensed, visit the HPE website:

          https://www.hpe.com/info/ilo
        - The iLO management port is connected to a secure network.

     b. Using a browser, navigate to the iLO web interface, and then log in.

        `https://<iLO hostname or IP address>`

        Note the following:
        - The iLO hostname is located on the serial number/iLO information pull tab.
        - If a DHCP server assigns the IP address, the IP address appears on the boot screen.
        - If a static IP address is assigned, use that IP address.
        - The default login credentials are located on the serial number/iLO information pull tab.

     c. In the side navigation, click the **Remote Console & Media** link, and then launch a remote console.

Power on the server

7. Press the Power On/Standby button.
   For remote management, use the iLO virtual power button.
8. Using the SPP, **update the following**:
   - System ROM
   - Storage controller
   - Network controller
   - Intelligent Provisioning

Set up the storage

9. Set up the storage. Do one of the following:

- To configure the server to boot from a SAN, see the following guide:

  https://www.hpe.com/info/boot-from-san-config-guide

- If an HPE Smart Array controller is installed:
  - For SR controllers, use the HPE Smart Storage Administrator to create arrays:

    a. From the boot screen, press **F10** to run Intelligent Provisioning.

    b. From Intelligent Provisioning, run **HPE Smart Storage Administrator**.

  - For MR controllers, use the UEFI System Configuration to create arrays. For more information, see the following guide in the **information library**:

    HPE Smart Array P824i-p MR Gen10 User Guide

    Intelligent Provisioning and Smart Storage Administrator does not support Smart Array MR controller configuration.

    IMPORTANT: Before you install an OS on drives connected to the HPE Smart Array P824i-p MR Gen10 Controller, configure the drives using **UEFI System Utilities (F9)**. If the drives are not configured, the OS will not detect the drives during installation. For more information, see *HPE Smart Array P824i-p MR Gen10 User Guide* at the Hewlett Packard Enterprise website **https://www.hpe.com/info/P824i-p-docs**.

- If no controller option is installed, do one of the following:
  - AHCI is enabled by default. You can deploy an OS or virtualization software.
  - Disable AHCI, enable software RAID, and then create an array:

    a. From the boot screen, press **F9** to run UEFI System Utilities.

    b. From the UEFI System Utilities screen, select **System Configurations** > **BIOS/Platform Configuration (RBSU)** > **Storage Options** > **SATA Controller Options** > **Embedded SATA Configuration** > **Smart Array SW RAID Support**.

    c. Enable **Smart Array SW RAID Support**.

    d. Save the configuration and reboot the server.

    e. Create an array:

    I. From the boot screen, press **F9** to run UEFI System Utilities.

    II. From the UEFI System Utilities screen, select **System Configuration** > **Embedded Storage: HPE Smart Storage S100i SR Gen10** > **Array Configuration** > **Create Array**.

Deploy an OS or virtualization software

10. Deploy an OS or virtualization software. Do one of the following:

- Press **F10** at the POST screen.

For Intelligent Provisioning 3.30 and later, you are prompted to select whether you want to enter the Intelligent Provisioning or HPE Rapid Setup Software mode. After you have selected a mode, you must reprovision the server to change the mode that launches when you boot to **F10**.

- Manually deploy an OS.
  a. Insert the installation media.

  For remote management, click **Virtual Drives** in the iLO remote console to mount images, drivers, or files to a virtual folder. If a storage driver is required to install the OS, use the virtual folder to store the driver.

  b. Press **F11** at boot screen to select the boot device.

  c. After the OS installed, **update the drivers**.

Register the server

11. To experience quicker service and more efficient support, register the server at the HPE website:
https://myenterpriselicense.hpe.com

Operational requirements

Space and airflow requirements

To allow for servicing and adequate airflow, observe the following space and airflow requirements when deciding where to install a rack:

- Leave a minimum clearance of 63.5 cm (25 in) in front of the rack.
- Leave a minimum clearance of 76.2 cm (30 in) behind the rack.
- Leave a minimum clearance of 121.9 cm (48 in) from the back of the rack to the back of another rack or row of racks.

Hewlett Packard Enterprise servers draw in cool air through the front door and expel warm air through the rear door. Therefore, the front and rear rack doors must be adequately ventilated to allow ambient room air to enter the cabinet, and the rear door must be adequately ventilated to allow the warm air to escape from the cabinet.

CAUTION: To prevent improper cooling and damage to the equipment, do not block the ventilation openings.

When vertical space in the rack is not filled by a server or rack component, the gaps between the components cause changes in airflow through the rack and across the servers. Cover all gaps with blanking panels to maintain proper airflow.

CAUTION: Always use blanking panels to fill empty vertical spaces in the rack. This arrangement ensures proper airflow. Using a rack without blanking panels results in improper cooling that can lead to thermal damage.

The 9000 and 10000 Series Racks provide proper server cooling from flow-through perforations in the front and rear doors that provide 64 percent open area for ventilation.

CAUTION: When using a Compaq branded 7000 series rack, install the high airflow rack door insert (PN 327281-B21 for 42U rack, PN 157847-B21 for 22U rack) to provide proper front-to-back airflow and cooling.

CAUTION: If a third-party rack is used, observe the following additional requirements to ensure adequate airflow and to prevent damage to the equipment:

- Front and rear doors—If the 42U rack includes closing front and rear doors, you must allow 5,350 sq cm (830 sq in) of holes evenly distributed from top to bottom to permit adequate airflow (equivalent to the required 64 percent open area for ventilation).
- Side—The clearance between the installed rack component and the side panels of the rack must be a minimum of 7 cm (2.75 in).

Temperature requirements

To ensure continued safe and reliable equipment operation, install or position the system in a well-ventilated, climate-controlled environment.

The maximum recommended ambient operating temperature (TMRA) for most server products is 35°C (95°F). The temperature in the room where the rack is located must not exceed 35°C (95°F).

CAUTION: To reduce the risk of damage to the equipment when installing third-party options:

- Do not permit optional equipment to impede airflow around the server or to increase the internal rack temperature beyond the maximum allowable limits.
- Do not exceed the manufacturer's TMRA.

Power requirements

Installation of this equipment must comply with local and regional electrical regulations governing the installation of information technology equipment by licensed electricians. This equipment is designed to operate in installations covered by NFPA 70, 1999 Edition (National Electric Code) and NFPA-75, 1992 (code for Protection of Electronic Computer/Data Processing Equipment). For electrical power ratings on options, refer to the product rating label or the user documentation supplied with that option.

WARNING: To reduce the risk of personal injury, fire, or damage to the equipment, do not overload the AC supply branch circuit that provides power to the rack. Consult the electrical authority having jurisdiction over wiring and installation requirements of your facility.

CAUTION: Protect the server from power fluctuations and temporary interruptions with a regulating uninterruptible power supply. This device protects the hardware from damage caused by power surges and voltage spikes and keeps the system in operation during a power failure.

Electrical grounding requirements

The server must be grounded properly for proper operation and safety. In the United States, you must install the equipment in accordance with NFPA 70, 1999 Edition (National Electric Code), Article 250, as well as any local and regional building codes. In Canada, you must install the equipment in accordance with Canadian Standards Association, CSA C22.1, Canadian Electrical Code. In all other countries, you must install the equipment in accordance with any regional or national electrical wiring codes, such as the International Electrotechnical Commission (IEC) Code 364, parts 1 through 7. Furthermore, you must be sure that all power distribution devices used in the installation, such as branch wiring and receptacles, are listed or certified grounding-type devices.

Because of the high ground-leakage currents associated with multiple servers connected to the same power source, Hewlett Packard Enterprise recommends the use of a PDU that is either permanently wired to the building's branch circuit or includes a nondetachable cord that is wired to an industrial-style plug. NEMA locking-style plugs or those complying

with IEC 60309 are considered suitable for this purpose. Using common power outlet strips for the server is not recommended.

Server warnings and cautions

WARNING: This server is heavy. To reduce the risk of personal injury or damage to the equipment:

- Observe local occupational health and safety requirements and guidelines for manual material handling.
- Get help to lift and stabilize the product during installation or removal, especially when the product is not fastened to the rails. Hewlett Packard Enterprise recommends that a minimum of two people are required for all rack server installations. If the server is installed higher than chest level, a third person may be required to help align the server.
- Use caution when installing the server in or removing the server from the rack; it is unstable when not fastened to the rails.

WARNING: To reduce the risk of personal injury from hot surfaces, allow the drives and the internal system components to cool before touching them.

WARNING: To reduce the risk of personal injury, electric shock, or damage to the equipment, remove the power cord to remove power from the server. The front panel Power On/Standby button does not completely shut off system power. Portions of the power supply and some internal circuitry remain active until AC/DC power is removed.

WARNING: To reduce the risk of fire or burns after removing the energy pack:

- Do not disassemble, crush, or puncture the energy pack.
- Do not short external contacts.
- Do not dispose of the energy pack in fire or water.

After power is disconnected, battery voltage might still be present for 1s to 160s.

AVERTISSEMENT: Pour réduire les risques d'incendie ou de brûlures après le retrait du module batterie :

- N'essayez pas de démonter, d'écraser ou de percer le module batterie.
- Ne court-circuitez pas ses contacts externes.
- Ne jetez pas le module batterie dans le feu ou dans l'eau.

Après avoir déconnecté l'alimentation, une tension peut subsister dans la batterie durant 1 à 160 secondes.

CAUTION: Protect the server from power fluctuations and temporary interruptions with a regulating uninterruptible power supply. This device protects the hardware from damage caused by power surges and voltage spikes and keeps the system in operation during a power failure.

CAUTION: Do not operate the server for long periods with the access panel open or removed. Operating the server in this manner results in improper airflow and improper cooling that can lead to thermal damage.

Rack warnings

WARNING: To reduce the risk of personal injury or damage to the equipment, be sure that:

- The leveling jacks are extended to the floor.
- The full weight of the rack rests on the leveling jacks.
- The stabilizing feet are attached to the rack if it is a single-rack installation.
- The racks are coupled together in multiple-rack installations.
- Only one component is extended at a time. A rack may become unstable if more than one component is extended for any reason.

WARNING: To reduce the risk of personal injury or equipment damage when unloading a rack:

- At least two people are needed to safely unload the rack from the pallet. An empty 42U rack can weigh as much as 115 kg (253 lb), can stand more than 2.1 m (7 ft) tall, and might become unstable when being moved on its casters.
- Never stand in front of the rack when it is rolling down the ramp from the pallet. Always handle the rack from both sides.

WARNING: To reduce the risk of personal injury or damage to the equipment, adequately stabilize the rack before extending a component outside the rack. Extend only one component at a time. A rack may become unstable if more than one component is extended.

WARNING: When installing a server in a telco rack, be sure that the rack frame is adequately secured at the top and bottom to the building structure.

Electrostatic discharge

Be aware of the precautions you must follow when setting up the system or handling components. A discharge of static electricity from a finger or other conductor may damage system boards or other static-sensitive devices. This type of damage may reduce the life expectancy of the system or component.

To prevent electrostatic damage:

- Avoid hand contact by transporting and storing products in static-safe containers.
- Keep electrostatic-sensitive parts in their containers until they arrive at static-free workstations.
- Place parts on a grounded surface before removing them from their containers.
- Avoid touching pins, leads, or circuitry.
- Always be properly grounded when touching a static-sensitive component or assembly. Use one or more of the following methods when handling or installing electrostatic-sensitive parts:
  - Use a wrist strap connected by a ground cord to a grounded workstation or computer chassis. Wrist straps are flexible straps with a minimum of 1 megohm ±10 percent resistance in the ground cords. To provide proper ground, wear the strap snug against the skin.
  - Use heel straps, toe straps, or boot straps at standing workstations. Wear the straps on both feet when standing on conductive floors or dissipating floor mats.

- Use conductive field service tools.
- Use a portable field service kit with a folding static-dissipating work mat.

If you do not have any of the suggested equipment for proper grounding, have an authorized reseller install the part.

For more information on static electricity or assistance with product installation, contact an authorized reseller.

POST screen options

When the server is powered on, the POST screen is displayed. The following options are displayed:

- **System Utilities** (**F9**)

  Use this option to configure the system BIOS.

- **Intelligent Provisioning** (**F10**)

  Use this option to deploy an operating system or configure storage.

- Boot order (**F11**)

  Use this option to make a one-time boot selection.

- Network boot (**F12**)

  Use this option to boot the server from the network.

Installing or deploying an operating system

Before installing an operating system, observe the following:

- Be sure to read the HPE UEFI requirements for ProLiant servers on the **Hewlett Packard Enterprise website**. If UEFI requirements are not met, you might experience boot failures or other errors when installing the operating system.
- Update firmware before using the server for the first time, unless software or components require an older version. For more information, see **Keeping the system current**.
- For the latest information on supported operating systems, see the **Hewlett Packard Enterprise website**.
- The server does not ship with OS media. All system software and firmware is preloaded on the server.

Hardware options installation

This chapter provides detailed instructions on how to install hardware options.

For more information on supported options, see the product QuickSpecs on the HPE ProLiant DL385 Gen10 Server website at:

https://www.hpe.com/servers/dl385-gen10

To view the warranty for your server and supported options, see **Warranty information**.

Introduction

Install any hardware options before initializing the server. If multiple options are being installed, read the installation instructions for all the hardware options to identify similar steps and streamline the installation process.

WARNING: To reduce the risk of personal injury from hot surfaces, allow the drives and the internal system components to cool before touching them.

CAUTION: To prevent damage to electrical components, properly ground the server before beginning any installation procedure. Improper grounding can cause electrostatic discharge.

Installing the bezel and bezel lock

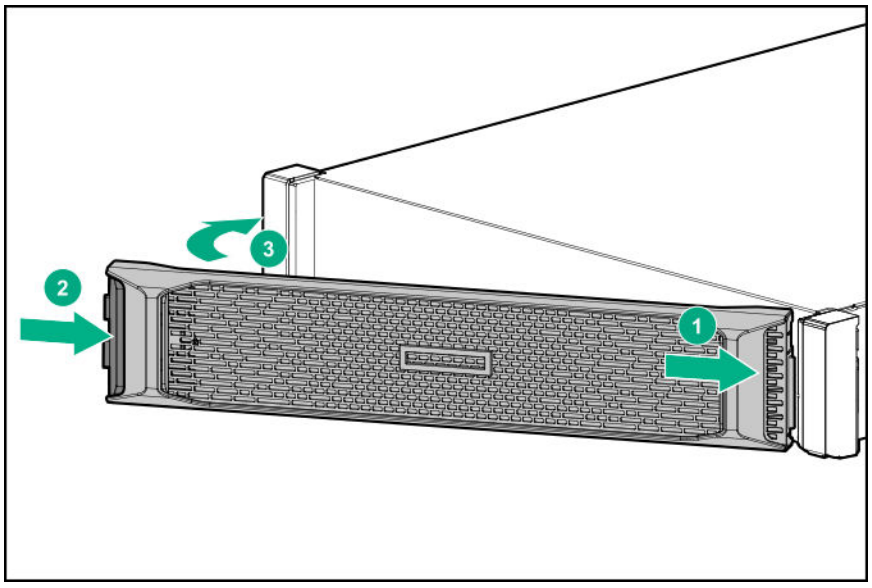

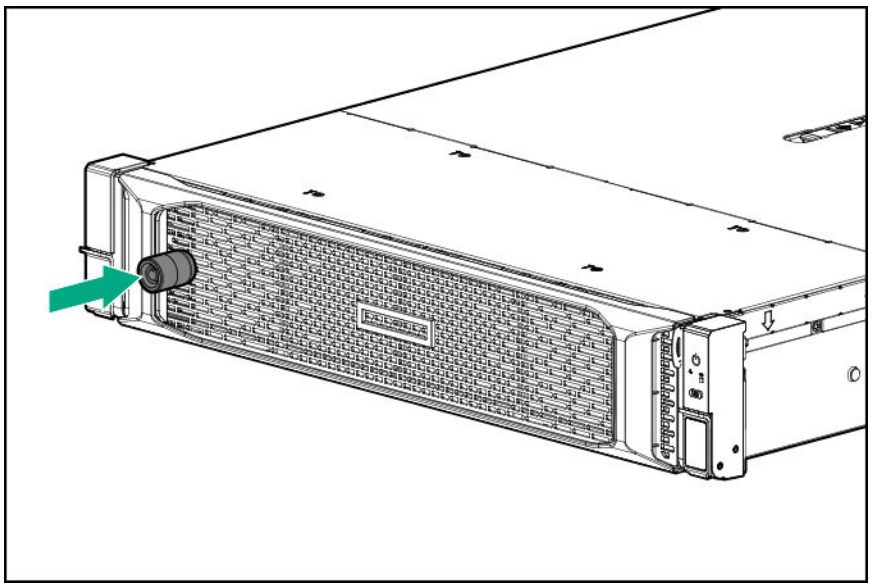

Drive options

Drive guidelines

Depending on the configuration, the server supports SAS, SATA, and NVMe drives.

Observe the following general guidelines:

- The system automatically sets all drive numbers.
- If only one hard drive is used, install it in the bay with the lowest drive number.

  For drive numbering, see **Drive bay numbering**.
- The NVMe SSD is a PCIe bus device. Devices attached to a PCIe bus cannot be removed without allowing the device and bus to complete and cease the signal/traffic flow.

  Do not remove an NVMe SSD from the drive bay while the Do Not Remove button LED is flashing. The Do Not Remove button LED flashes to indicate that the device is still in use. Removal of the NVMe SSD before the device has completed and ceased signal/traffic flow can cause loss of data.
- Drives with the same capacity provide the greatest storage space efficiency when grouped into the same drive array.

Supported drive carriers

Depending on the drive cage, the server supports the following drive carriers:

- SFF Smart Carrier (SC)
- SFF Smart Carrier NVMe (SCN)
- SFF Smart Carrier M.2 (SCM)
- LFF Smart Carrier (SC)
- LFF to SFF Smart Carrier Converter

Installing a hot-plug SAS or SATA drive

Procedure

1. Remove the drive blank.

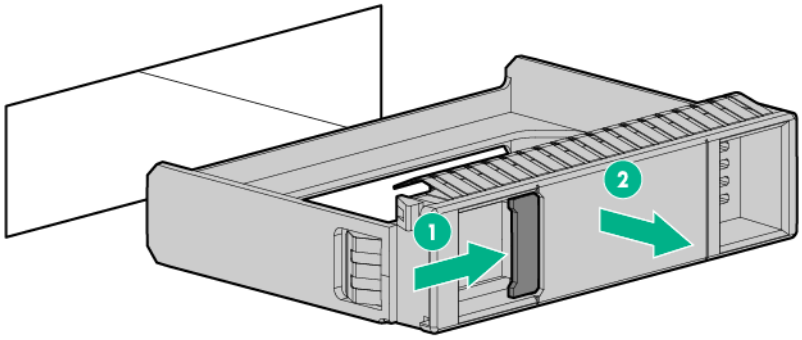

2. Prepare the drive.

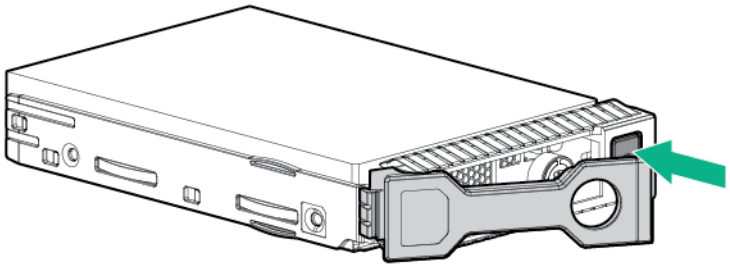

3. Install the drive.

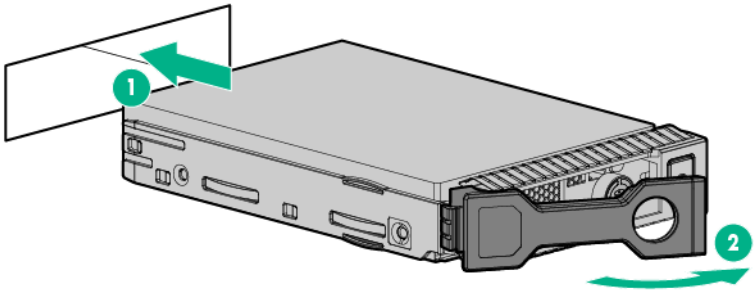

4. Observe the LED status of the drive.

Installing an NVMe drive

CAUTION: To prevent improper cooling and thermal damage, do not operate the server unless all drive and device bays are populated with either a component or a blank.

Procedure

1. Remove the drive blank.

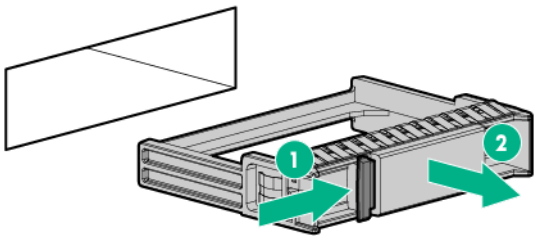

2. Prepare the drive.

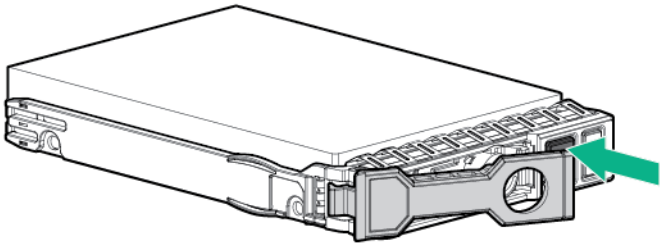

3. Install the drive.

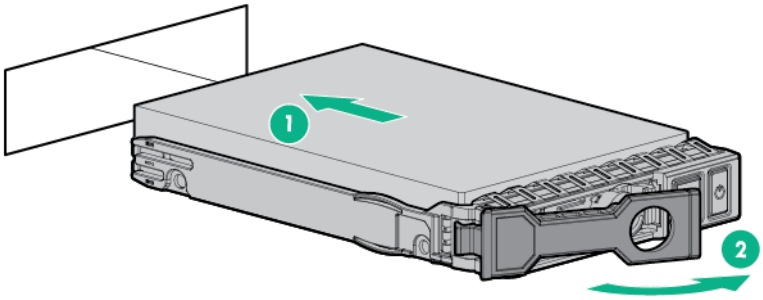

4. **Observe the LED status of the drive**.

Installing a uFF drive and SCM drive carrier

IMPORTANT: Not all drive bays support the drive carrier. To find supported bays, see the server QuickSpecs on the Hewlett Packard Enterprise website (**https://www.hpe.com/info/qs**).

Procedure

1. If needed, install the uFF drive into the drive carrier.

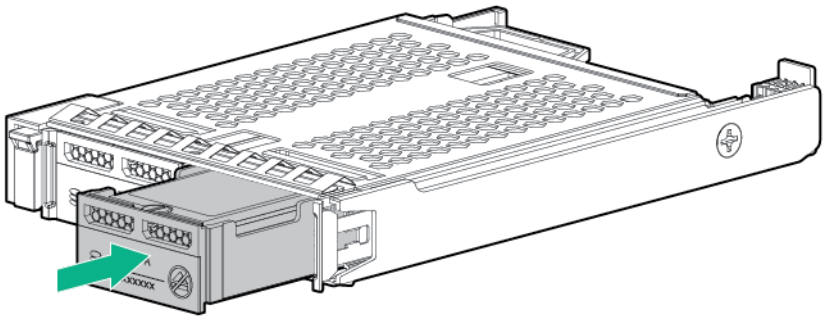

2. Remove the drive blank.

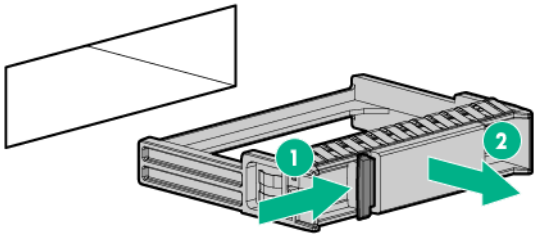

3. Install the drives.

   Push firmly near the ejection handle until the latching spring engages with the drive bay.

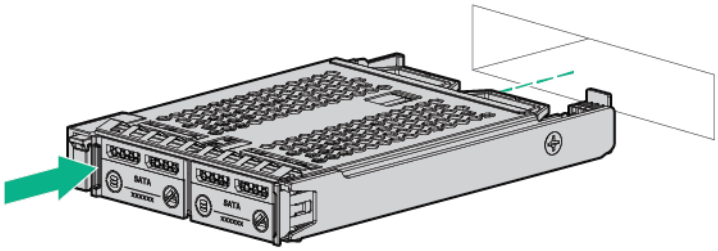

4. Power on the server.

   To configure the drive, use **HPE Smart Storage Administrator**.

Installing an M.2 drive

This procedure is for replacing M.2 drives located on an expansion card, riser, or the system board only. Do not use this procedure to replace uFF drives.

Prerequisites

Before you perform this procedure, make sure that you have the following items available:

- The components included with the hardware option kit
- T-10 Torx screwdriver

Procedure

1. **Power down the server**.
2. Remove all power:
   a. Disconnect each power cord from the power source.
   b. Disconnect each power cord from the server.
3. Do one of the following:
   - **Extend the server from the rack**.
   - **Remove the server from the rack**.
4. **Remove the access panel**.
5. **Remove the riser cage**.
6. Install the drive.

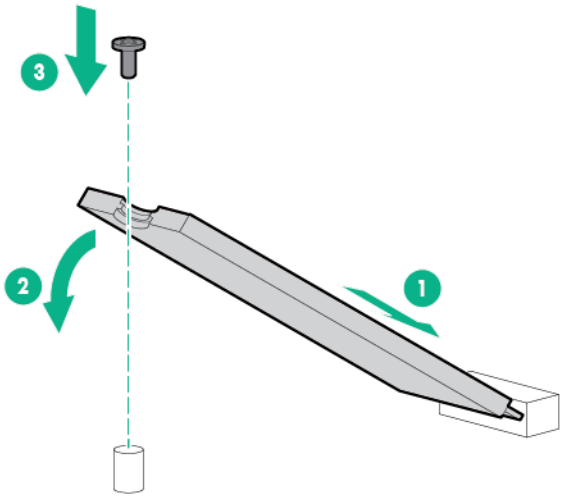

The installation is complete.

Power supply options

Hot-plug power supply calculations

For hot-plug power supply specifications and calculators to determine electrical and heat loading for the server, see the Hewlett Packard Enterprise Power Advisor website (**https://www.hpe.com/info/poweradvisor/online**).

Installing a redundant hot-plug power supply

CAUTION: All power supplies installed in the server must have the same output power capacity. Verify that all power supplies have the same part number and label color. The system becomes unstable and might shut down if it detects different power supplies.

CAUTION: To prevent improper cooling and thermal damage, do not operate the server unless all bays are populated with either a component or a blank.

Procedure

1. **Release the cable management arm to access the rear panel**
2. Remove the blank.

   WARNING: To reduce the risk of personal injury from hot surfaces, allow the power supply or power supply blank to cool before touching it.

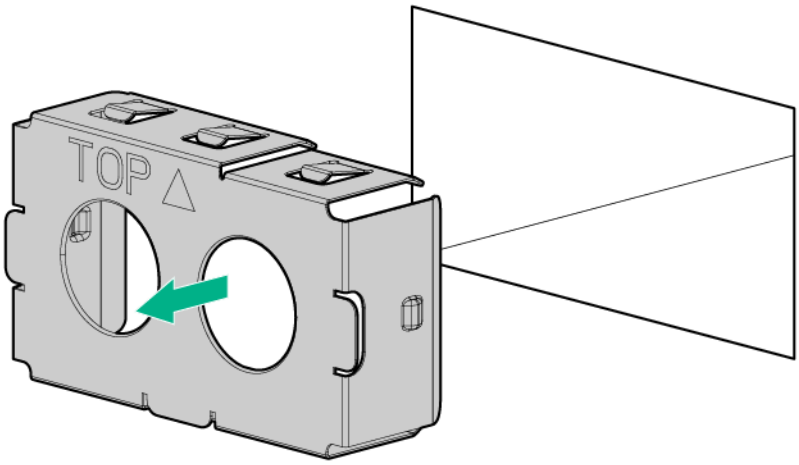

3. Insert the power supply into the power supply bay until it clicks into place.

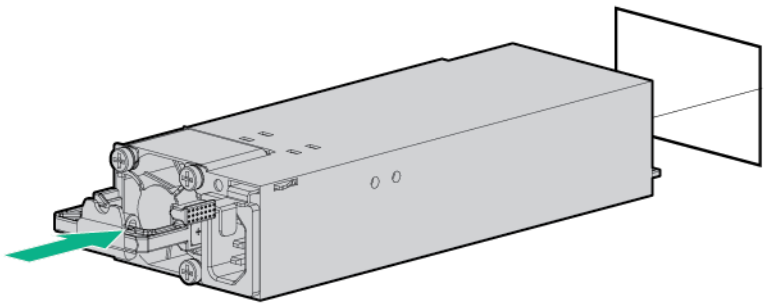

4. Connect the power cord to the power supply.
5. Secure the power cord in the strain relief strap attached to the power supply handle:
   a. Unwrap the strain relief strap from the power supply handle.

      CAUTION: Avoid tight bend radii to prevent damaging the internal wires of a power cord or a server cable. Never bend power cords and server cables tight enough to cause a crease in the sheathing.

   b. Secure the power cord with the strain relief strap.

      Roll the extra length of the strap around the power supply handle.

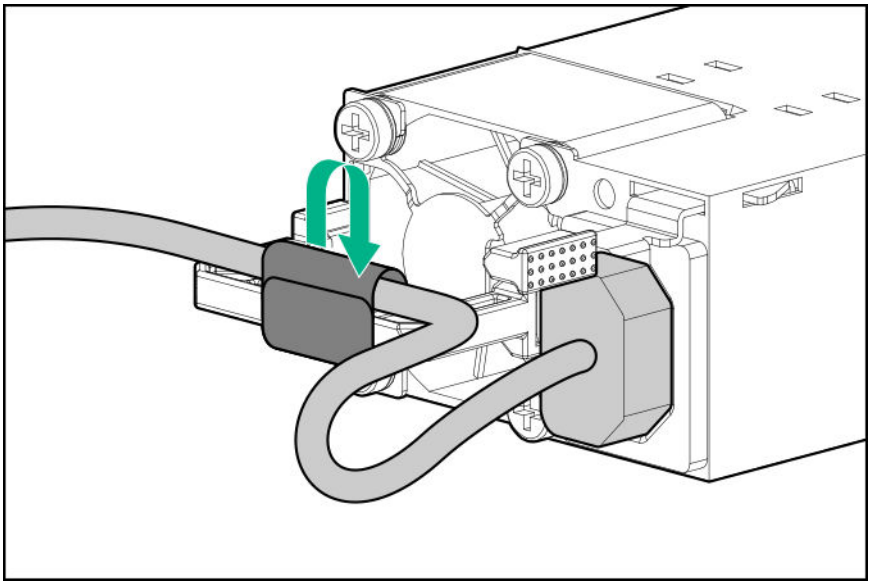

6. Connect the power cord to the power source.
7. Observe the power supply LED.

Connecting a DC power cable to a DC power source

WARNING: To reduce the risk of electric shock or energy hazards:

- This equipment must be installed by trained service personnel, as defined by the NEC and IEC 60950-1, Second Edition, the standard for Safety of Information Technology Equipment.
- Connect the equipment to a reliably grounded Secondary circuit source. A Secondary circuit has no direct connection to a Primary circuit and derives its power from a transformer, converter, or equivalent isolation device.
- The branch circuit overcurrent protection must be rated 27 A.

WARNING: When installing a DC power supply, the ground wire must be connected before the positive or negative leads.

WARNING: Remove power from the power supply before performing any installation steps or maintenance on the power supply.

CAUTION: The server equipment connects the earthed conductor of the DC supply circuit to the earthing conductor at the equipment. For more information, see the documentation that ships with the power supply.

CAUTION: If the DC connection exists between the earthed conductor of the DC supply circuit and the earthing conductor at the server equipment, the following conditions must be met:

- This equipment must be connected directly to the DC supply system earthing electrode conductor or to a bonding jumper from an earthing terminal bar or bus to which the DC supply system earthing electrode conductor is connected.
- This equipment should be located in the same immediate area (such as adjacent cabinets) as any other equipment that has a connection between the earthed conductor of the same DC supply circuit and the earthing conductor, and also the point of earthing of the DC system. The DC system should be earthed elsewhere.
- The DC supply source is to be located within the same premises as the equipment.
- Switching or disconnecting devices should not be in the earthed circuit conductor between the DC source and the point of connection of the earthing electrode conductor.

To connect a DC power cable to a DC power source:

1. Cut the DC power cord ends no shorter than 150 cm (59.06 in).
2. If the power source requires ring tongues, use a crimping tool to install the ring tongues on the power cord wires.

   IMPORTANT: The ring terminals must be UL approved and accommodate 12 gauge wires.

   IMPORTANT: The minimum nominal thread diameter of a pillar or stud type terminal must be 3.5 mm (0.138 in); the diameter of a screw type terminal must be 4.0 mm (0.157 in).
3. Stack each same-colored pair of wires and then attach them to the same power source. The power cord consists of three wires (black, red, and green).

For more information, see the documentation that ships with the power supply.

Installing a Universal Media Bay

Prerequisites

Before you perform this procedure, make sure that you have the following items available:

- The components included with the hardware option kit
- T-10 Torx screwdriver

Procedure

1. **Power down the server**.
2. Remove all power:
   a. Disconnect each power cord from the power source.
   b. Disconnect each power cord from the server.
3. Do one of the following:

- **Extend the server from the rack**.
- **Remove the server from the rack**.

4. **Remove the access panel**.
5. **Remove the air baffle**.
6. **Remove the fan cage**.
7. Remove the bay blank.

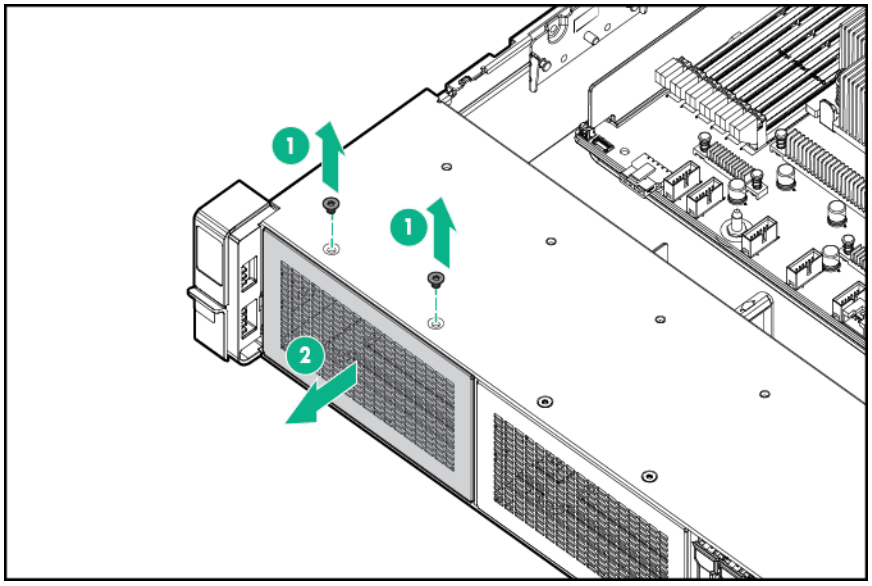

8. Route the USB and video cables through the opening.
9. If installing a two-bay SFF front drive cage, **install the drive cage**.
10. Install the universal media bay.

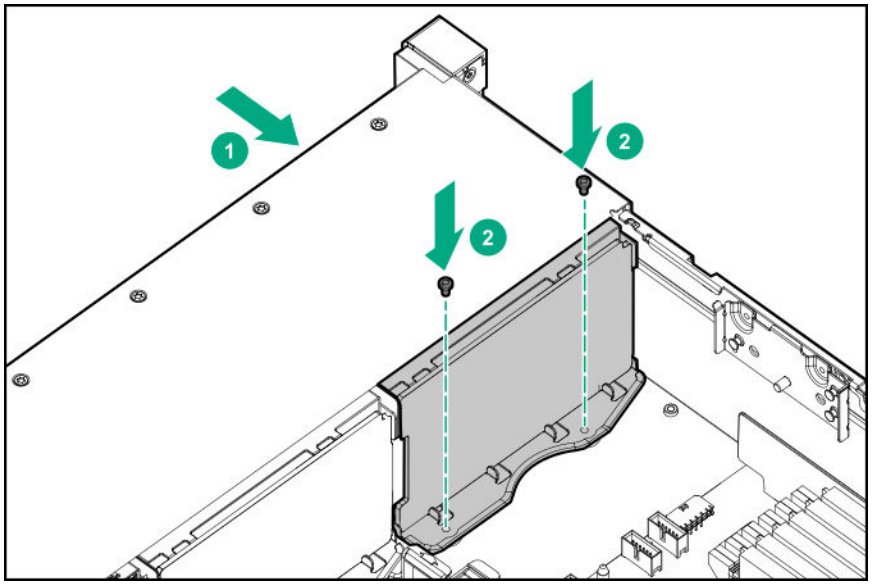

11. (Optional) Install the optical disc drive.

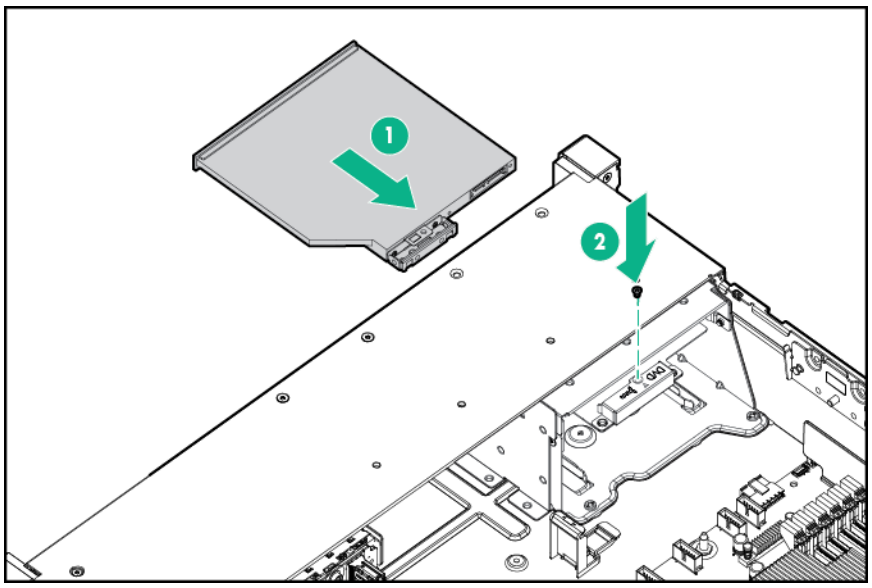

12. **Connect the cables**.
13. Install the fan cage.
14. **Install the air baffle**.
15. **Install the access panel**.
16. Slide the server into the rack.
17. Connect each power cord to the server.
18. Connect each power cord to the power source.
19. **Power up the server**.

The installation is complete.

Drive cage options

Installing a front 8NVMe SSD Express Bay drive cage

Observe the following:

- The drive cage can be installed in any box. This procedure covers installing the drive cage in box 1.
- When installing in box 1, the NVMe riser must be installed in the tertiary PCIe slot.
- When installing in box 2, the NVMe riser must be installed in the secondary PCIe slot.
- When installing in box 3, the NVMe riser must be installed in the primary PCIe slot.

Prerequisites

An associated NVMe riser and high-performance fans are required when installing this option.

Procedure

1. Observe the following alerts.

WARNING: To reduce the risk of personal injury from hot surfaces, allow the drives and the internal system components to cool before touching them.

CAUTION: To prevent damage to electrical components, properly ground the server before beginning any installation procedure. Improper grounding can cause ESD.

2. **Power down the server**.
3. Do one of the following:
   - **Extend the server from the rack**.
   - **Remove the server from the rack**.
4. **Remove the access panel**.
5. **Remove the air baffle**.
6. **Remove the fan cage**.
7. Remove the blank.

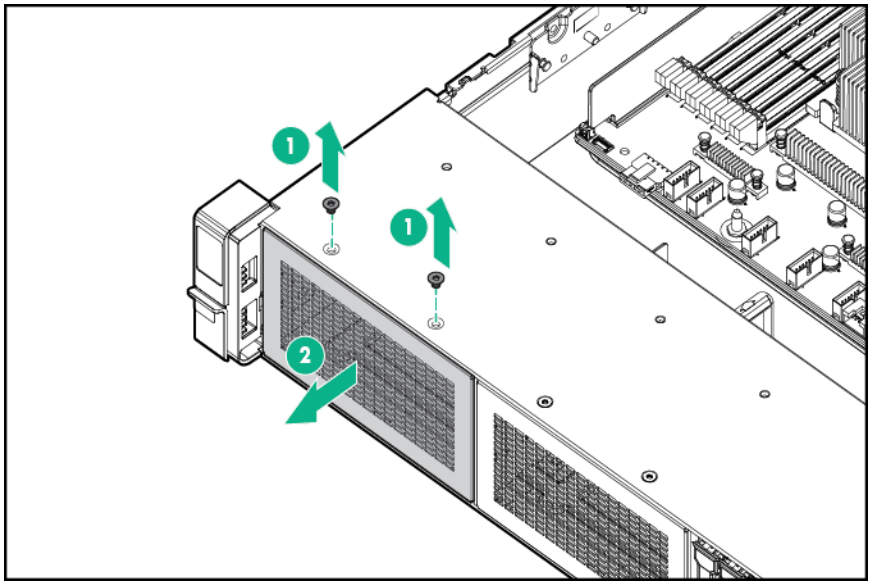

8. Install the drive cage:
   a. **Remove all drives and drive blanks**.
   b. Install the drive cage.

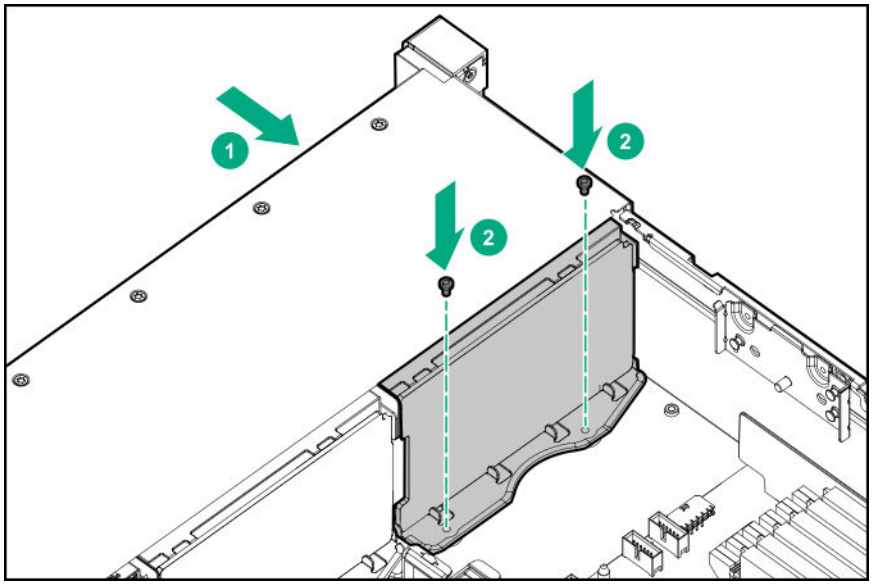

9. **Install the associated NVMe riser**.
10. **Connect the power cable to the drive backplane power connector**.
11. **Connect the data cables from the drive backplane to the NVMe riser**.
12. **Install drives** or drive blanks.

The installation is complete.

Installing a front 6SFF SAS/SATA + 2NVMe Premium drive cage

The drive cage can be installed in any box. This procedure covers installing the drive cage in box 1.

Prerequisites

A storage controller and high-performance fans are required when installing this drive cage.

Procedure

1. Observe the following alerts.

   WARNING: To reduce the risk of personal injury from hot surfaces, allow the drives and the internal system components to cool before touching them.

   CAUTION: To prevent damage to electrical components, properly ground the server before beginning any installation procedure. Improper grounding can cause ESD.

2. **Power down the server**.
3. Do one of the following:
   - **Extend the server from the rack**.
   - **Remove the server from the rack**.
4. **Remove the access panel**.
5. **Remove the air baffle**.

6. **Remove the fan cage**.
7. Remove the blank.

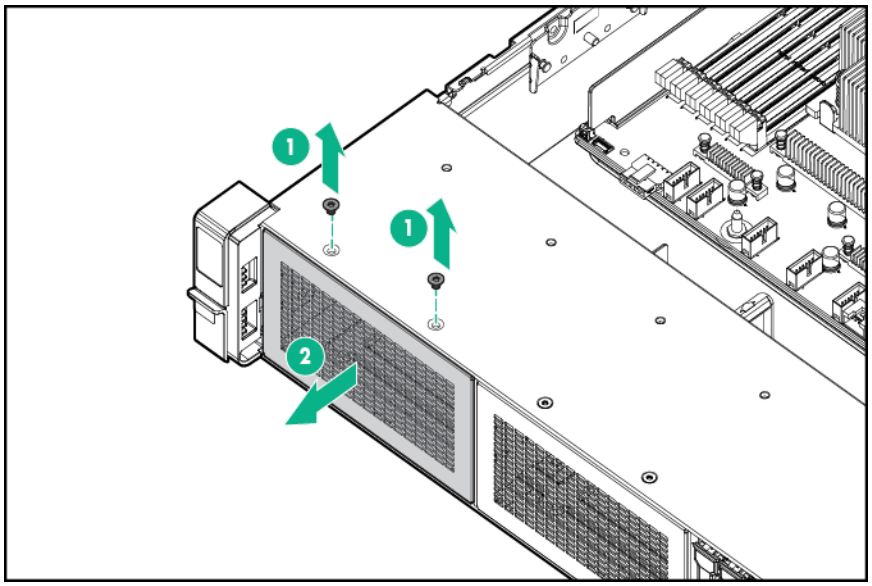

8. Install the drive cage:
   a. If drive blanks are installed in the drive cage assembly, **remove the drive blanks**. Retain the drive blanks for use in empty drive bays.
   b. Install the drive cage.

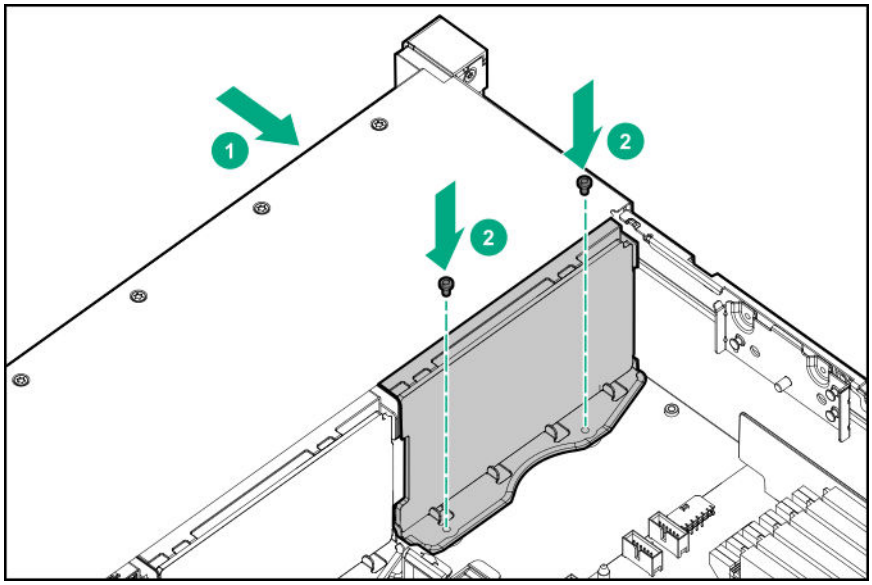

9. **Connect the power cable**.
10. **Install a storage controller**.
11. **Connect the data cables from the drive backplane to the controller**.
12. **Install drives** or drive blanks.

The installation is complete.

Installing airflow labels

When an Express Bay drive cage is installed, airflow labels might be required:

Prerequisites

Before you perform this procedure, make sure that you have the components included with the hardware option kit.

Procedure

- If an eight-bay SFF drive cage is installed in box 1, then airflow labels are not required.
- If a blank is installed in box 1, replace it with the blank that comes with the kit.

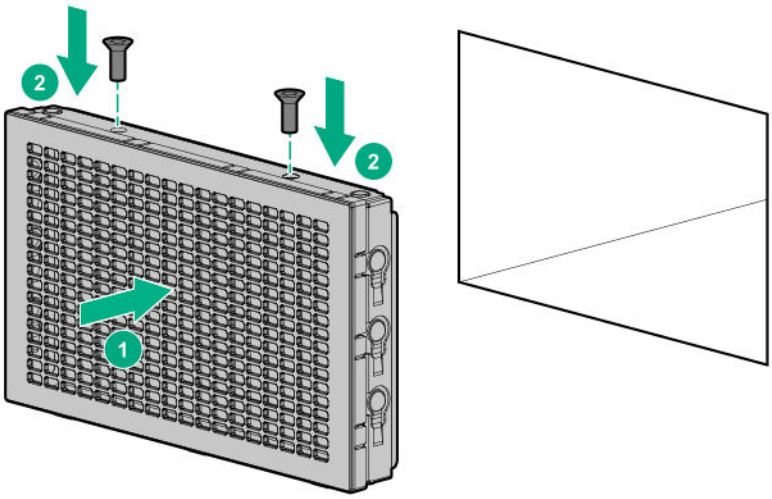

- If a Universal Media Bay is installed in box 1, do one of the following:
  - If the 2 SFF drive cage is not installed, then install airflow labels as shown.

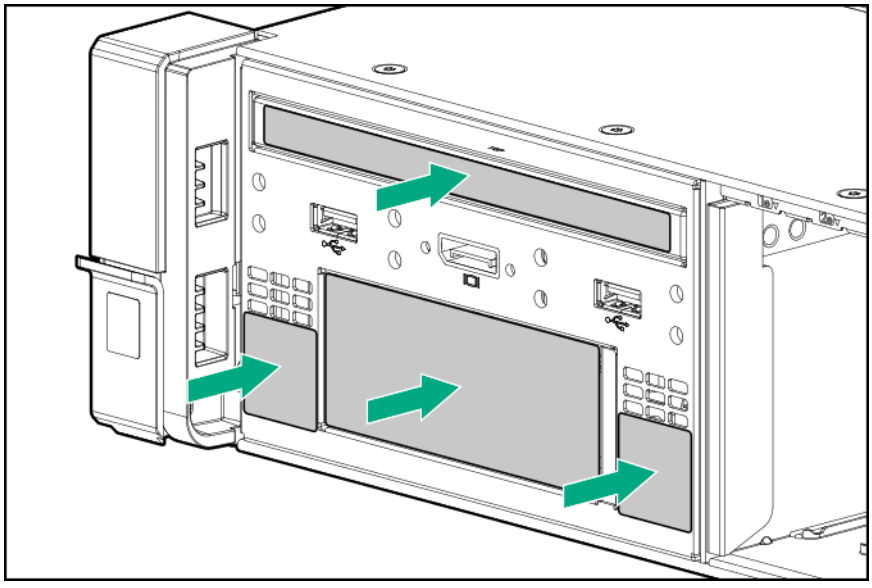

  - If a 2 SFF drive cage is installed, then install the airflow labels as shown.

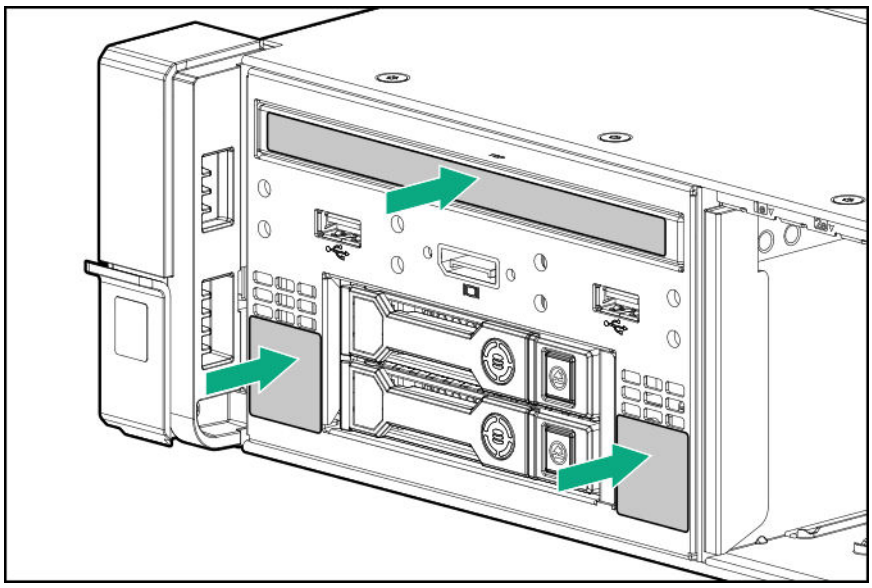

Installing a front 8SFF SAS/SATA drive cage in box 1

Prerequisites

Before you perform this procedure, make sure that you have the following items available:

- T-10 Torx screwdriver
- The components included with the hardware option kit

Procedure

1. **Power down the server**.
2. Remove all power:
   a. Disconnect each power cord from the power source.
   b. Disconnect each power cord from the server.
3. Do one of the following:
   - **Extend the server from the rack**.
   - **Remove the server from the rack**.
4. **Remove the access panel**.
5. **Remove the air baffle**.
6. **Remove the fan cage**.
7. Remove the bay blank.

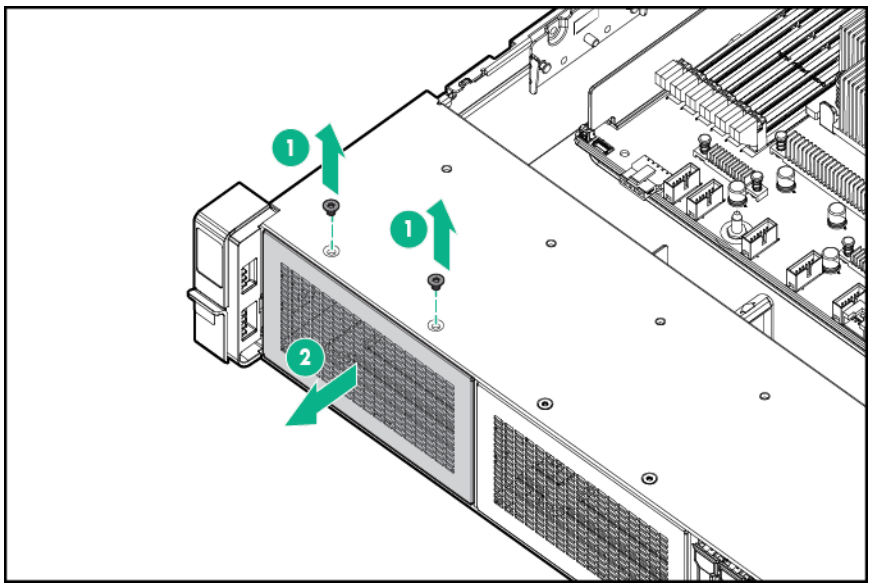

8. Install the 8SFF front drive cage option.

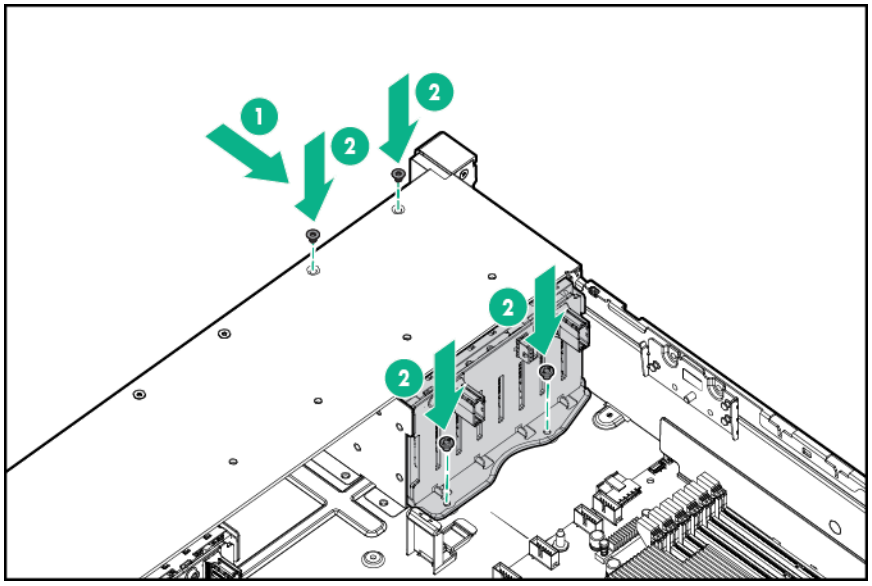

9. **Connect the power and data cables**.
10. **Install the fan cage**.
11. **Install the air baffle**.
12. **Install the access panel**.
13. Slide the server into the rack.
14. Connect each power cord to the server.
15. Connect each power cord to the power source.
16. **Power up the server**.

The installation is complete.

Installing a front 8SFF SAS/SATA drive cage in box 2

Procedure

1. **Power down the server**.
2. Remove all power:
   a. Disconnect each power cord from the power source.
   b. Disconnect each power cord from the server.
3. Do one of the following:
   - **Extend the server from the rack**.
   - **Remove the server from the rack**.
4. **Remove the access panel**.
5. **Remove the air baffle**.
6. **Remove the fan cage**.
7. Remove the bay blank.

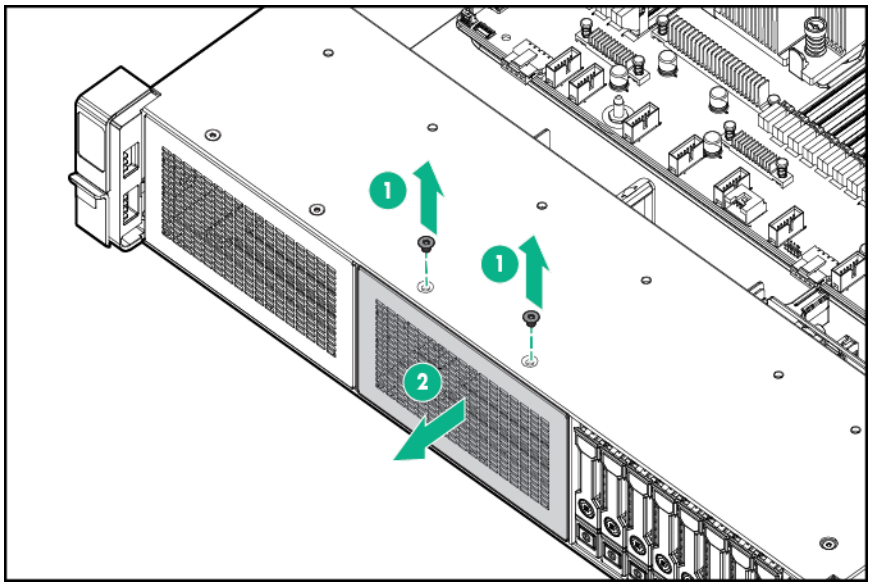

8. Install the 8SFF front drive cage option.

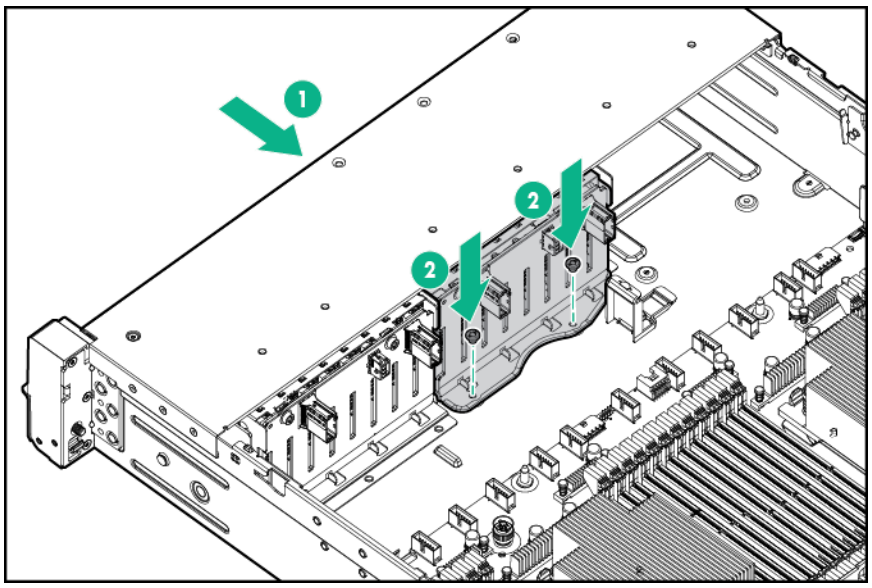

9. **Connect the power and data cables**.
10. **Install the fan cage**.
11. **Install the access panel**.
12. Slide the server into the rack.
13. Connect each power cord to the server.
14. Connect each power cord to the power source.
15. **Power up the server**.

The installation is complete.

Installing a front 2SFF NVMe/SAS/SATA Premium drive cage

Prerequisites

Before you perform this procedure, make sure that you have the following items available:

- T-10 Torx screwdriver
- The components included with the hardware option kit
- This installation requires a universal media bay.

Procedure

1. **Power down the server**.
2. Remove all power:
   a. Disconnect each power cord from the power source.
   b. Disconnect each power cord from the server.
3. Do one of the following:

- **Extend the server from the rack**.
- **Remove the server from the rack**.

4. **Remove the access panel**.
5. Remove the front bay blank.

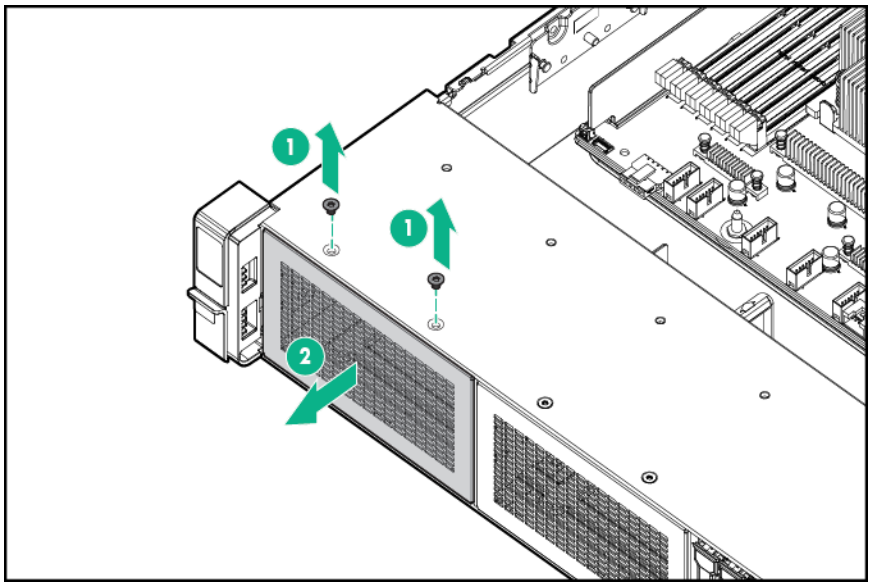

6. Remove the optical disc drive from the universal media bay.

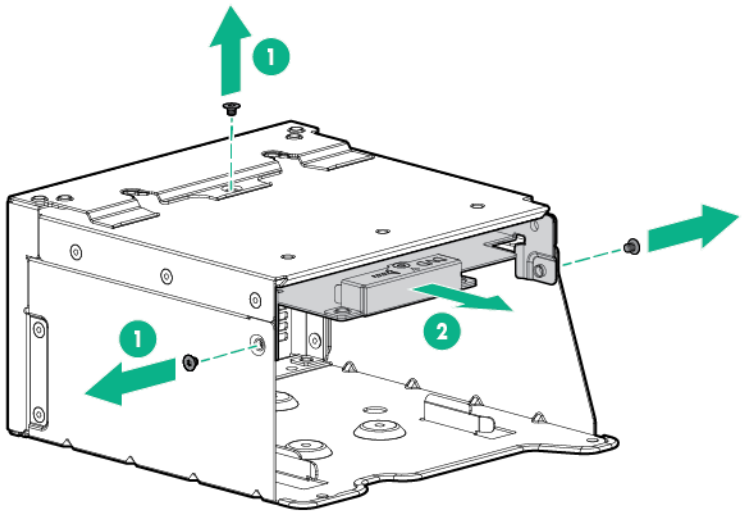

7. Remove the SFF drive blank from the universal media bay.

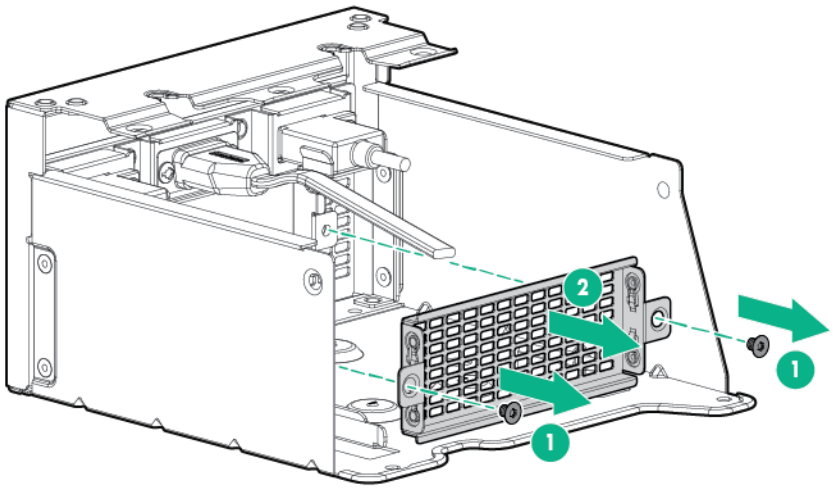

8. Install the drive cage into the universal media bay.

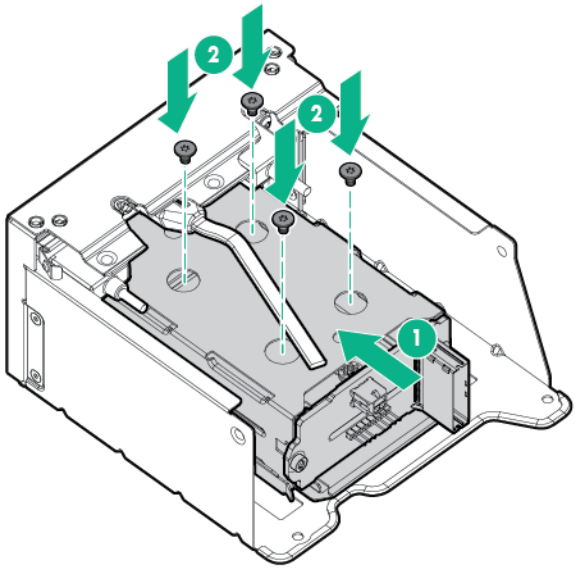

9. Install the optical disc drive in the universal media bay.

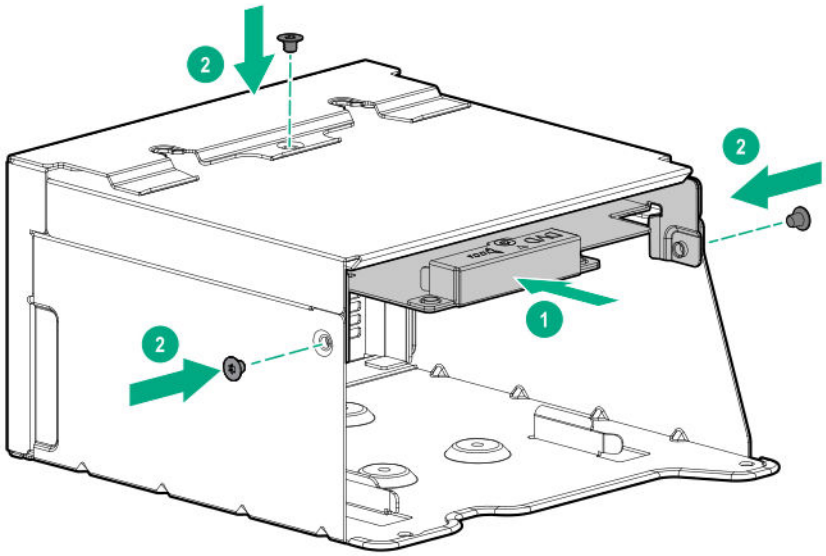

10. Install the universal media bay.

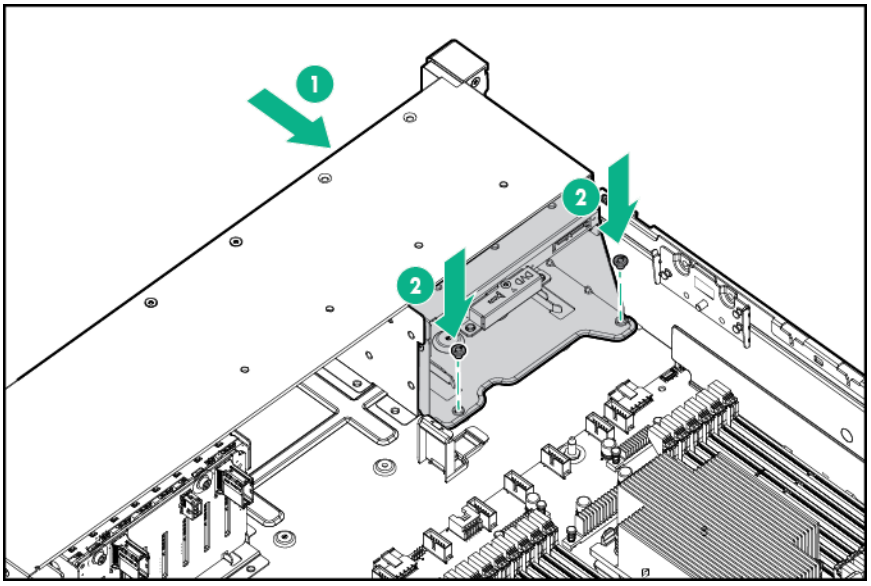

11. **Connect the power and data cables**.
12. **Install the access panel**.
13. Slide the server into the rack.
14. Connect each power cord to the server.
15. Connect each power cord to the power source.
16. **Power up the server**.

The installation is complete.

Installing a midplane 4LFF SAS/SATA drive cage

Observe the following:

- A 1U heatsink is required for each processor when installing this option.
- If you have a TPM, install it prior to this option.
- If you have a type-a controller, install it prior to this option.

Prerequisites

Before you perform this procedure, make sure that you have the following items available:

The components included with the hardware option kit

Procedure

1. **Power down the server**.
2. Remove all power:
   a. Disconnect each power cord from the power source.
   b. Disconnect each power cord from the server.
3. Do one of the following:
   - **Extend the server from the rack**.
   - **Remove the server from the rack**.
4. **Remove the access panel**.
5. **Remove the air baffle**.
   The air baffle is no longer needed. The drive cage acts as an air baffle for the server.

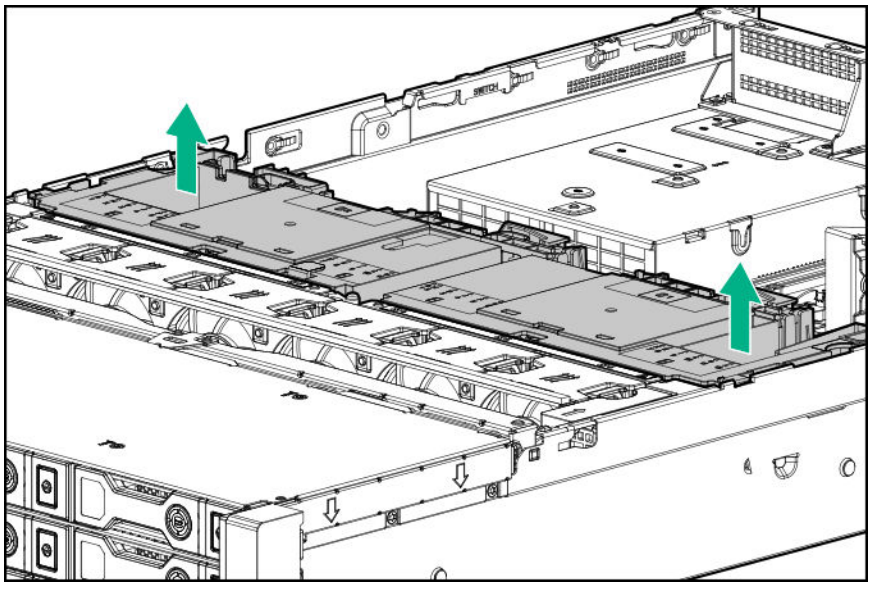

6. Remove all riser cages.

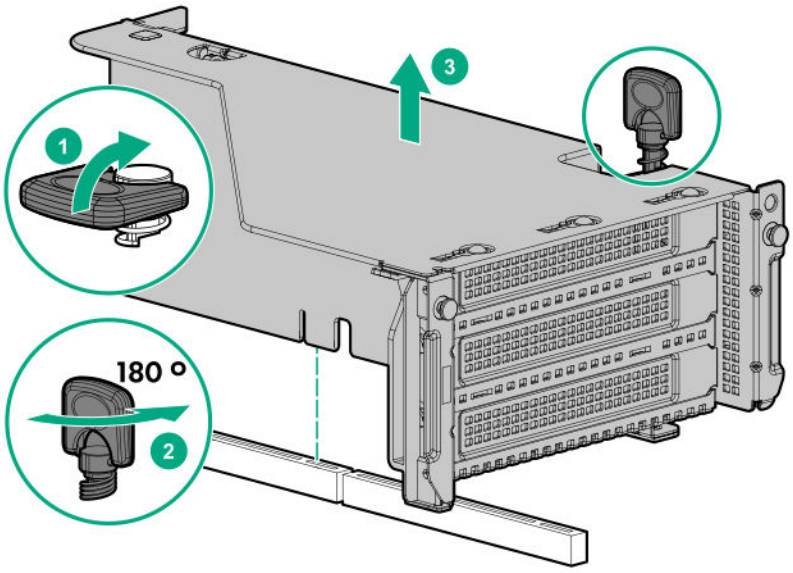

7. Connect the power cable to the drive backplane power connector on the system board.
8. If connecting the data cable to the system board or a controller, connect the data cable.
9. Prepare the drive cage for installation by lifting the latches on the drive cage.
10. Install the drive cage:

> **CAUTION:** Do not drop the drive cage on the system board. Dropping the drive cage on the system board might damage the system or components. Remove all drives and use two hands when installing or removing the drive cage.

   a. Locate the alignment pins on the rear of the drive cage.
   b. Align the pin on the rear left of the drive cage to the server and then insert the pin.
   c. Gently lower the opposite side of the drive cage.
   d. Pull the plunger pin on the rear right of the drive cage and then lower the drive cage until the plunger pin engages.

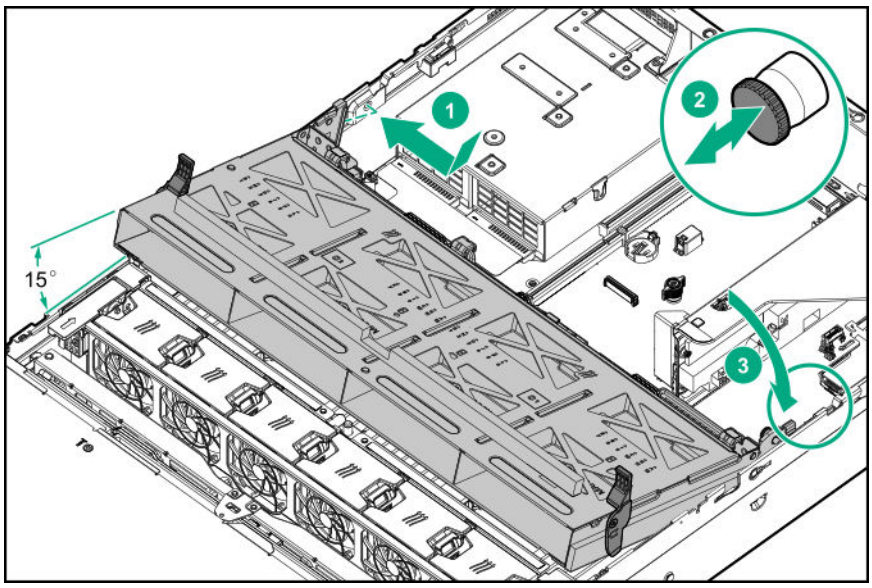

11. Install drives or drive blanks.

12. Push down on the latches to lower the drive cage into place.

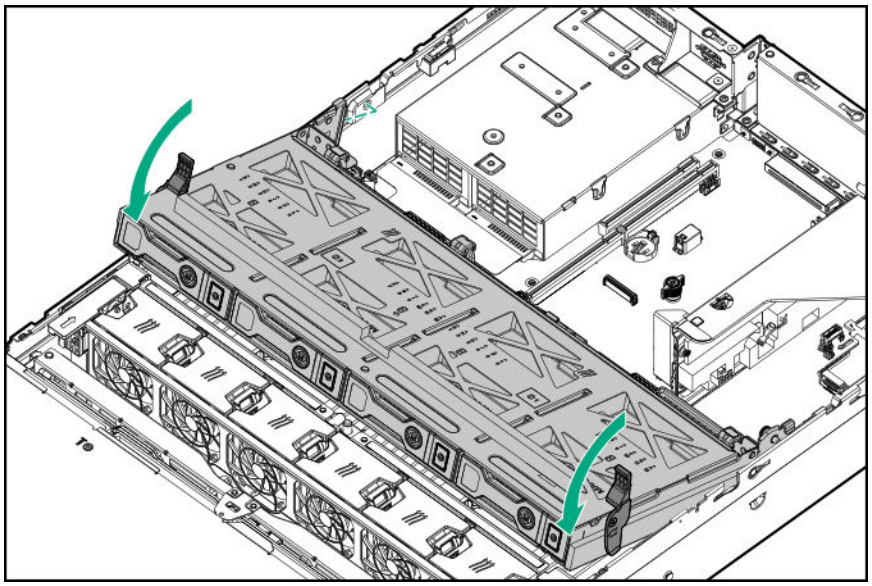

13. Connect the power and data cables to the drive backplane.

The installation is complete.

Installing a rear 2SFF SAS/SATA drive cage in the primary or secondary riser

Prerequisites

Before you perform this procedure, make sure that you have the following items available:

- T-10 Torx screwdriver
- The components included with the hardware option kit

- The front drive bays are fully populated with 12 LFF or 24 SFF drives.
- High performance fans are installed in all fan bays.

Procedure

1. **Power down the server**.
2. Remove all power:
   a. Disconnect each power cord from the power source.
   b. Disconnect each power cord from the server.
3. Do one of the following:
   - **Extend the server from the rack**.
   - **Remove the server from the rack**.
4. **Remove the access panel**.
5. Do one of the following:
   For primary bays, remove the riser cage.

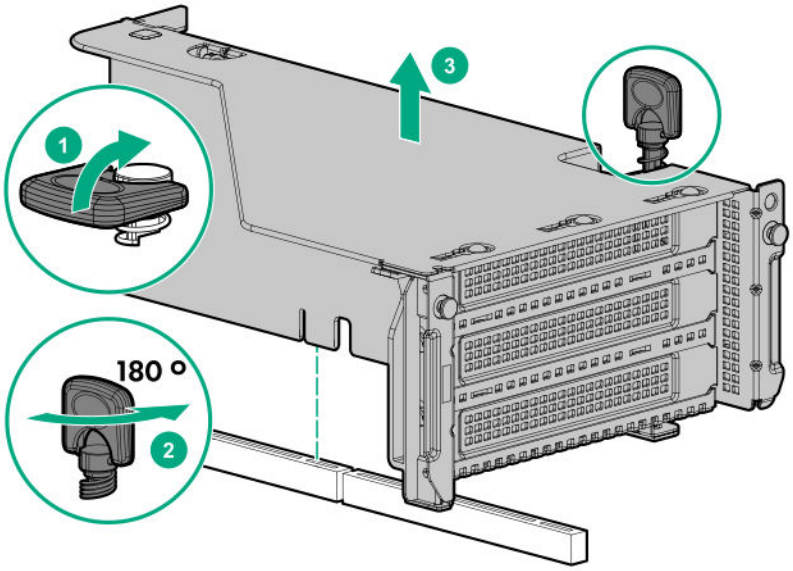

   For secondary bays, remove the rear wall blank.

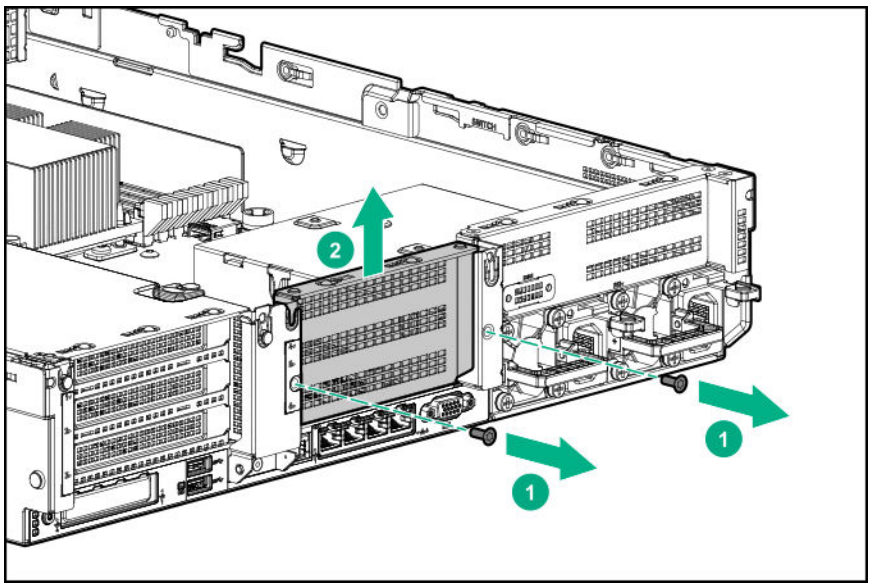

6. **Install a SAS expander or other expansion card, if needed**.
7. Install the drive cage.

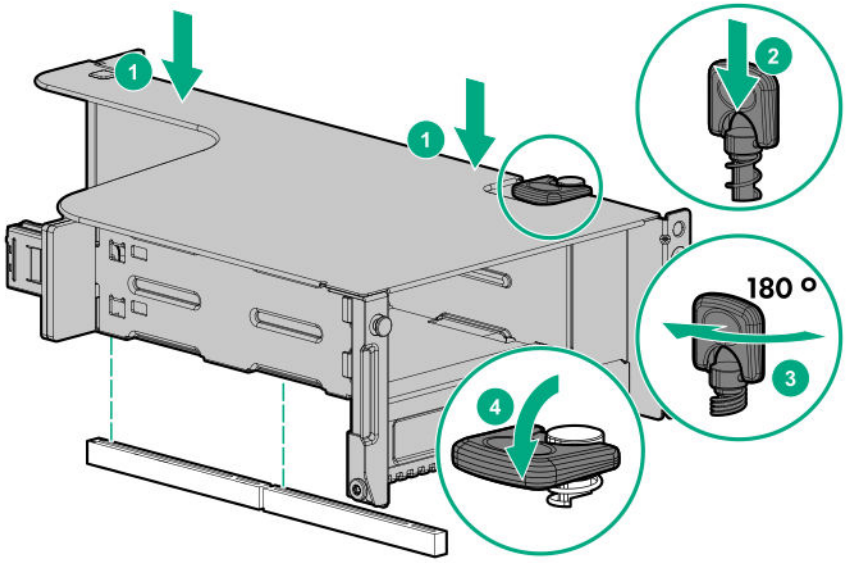

8. **Cable the drive backplane**.
9. **Install drives or drive blanks**.
10. **Install the access panel**.
11. Slide the server into the rack.
12. Connect each power cord to the server.
13. Connect each power cord to the power source.
14. **Power up the server**.

The installation is complete.

Installing a rear 2 SFF SAS/SATA drive cage over the power supplies

Prerequisites

Before you perform this procedure, make sure that you have the following items available:

- T-10 Torx screwdriver
- The components included with the hardware option kit
- The front bays are fully populated with 12 LFF or 24 SFF drives
- High-performance fans are installed in all fan bays

Procedure

1. **Power down the server**.
2. Remove all power:
   a. Disconnect each power cord from the power source.
   b. Disconnect each power cord from the server.
3. Do one of the following:
   - **Extend the server from the rack**.
   - **Remove the server from the rack**.
4. **Remove the access panel**.
5. Do one of the following:
   - If installed, remove the secondary riser cage.

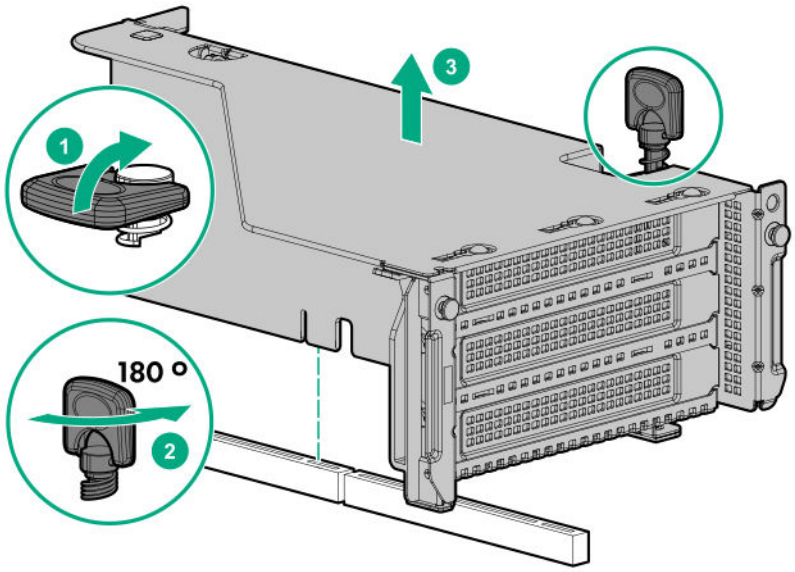

   - Remove the secondary wall blank.

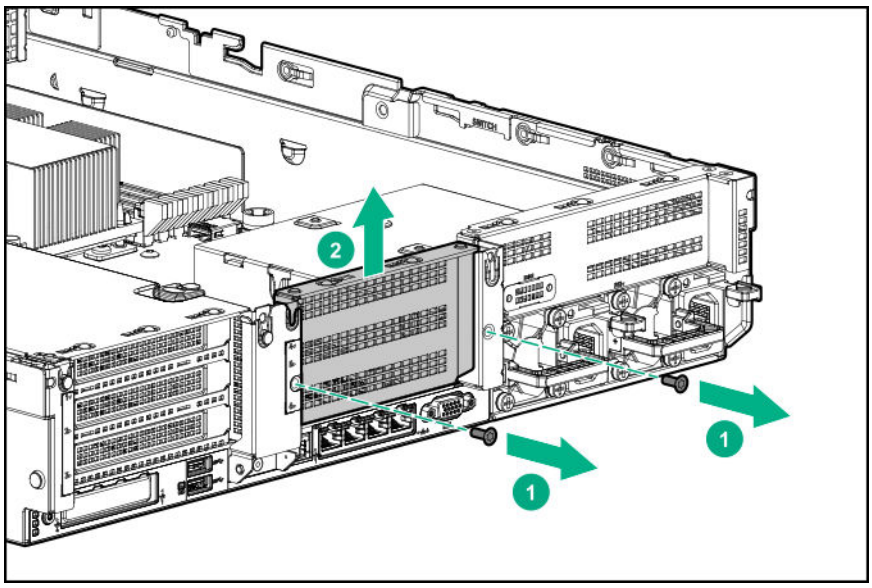

6. Remove the tertiary wall blank.

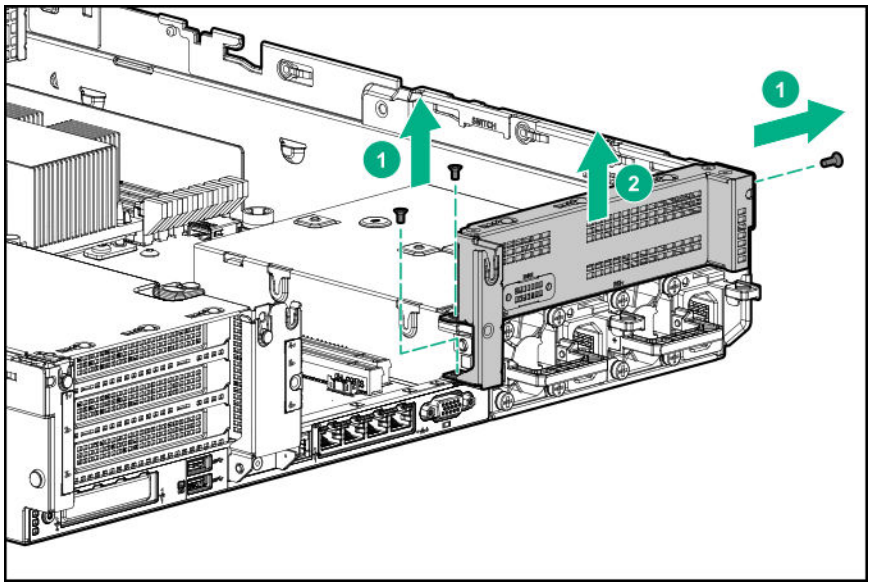

7. Install the drive cage compatible rear wall.

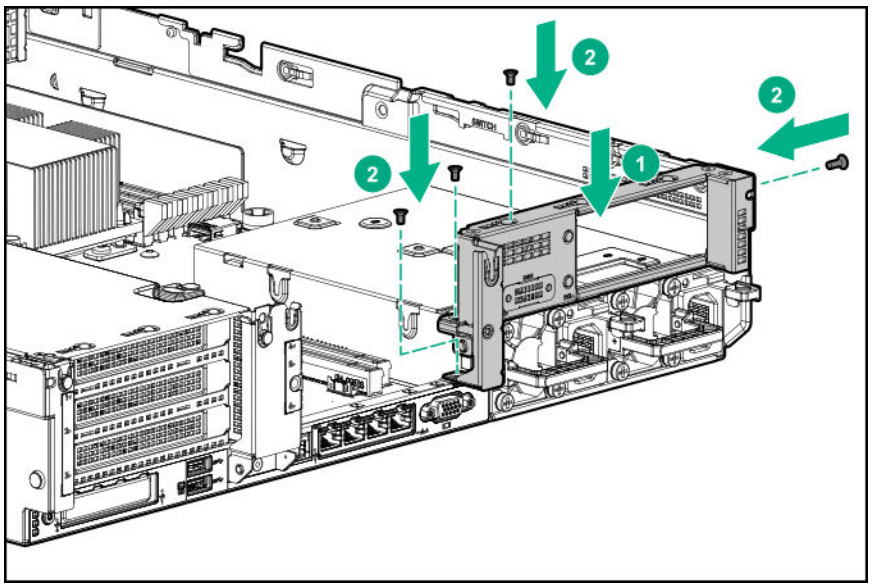

8. Install the drive cage.

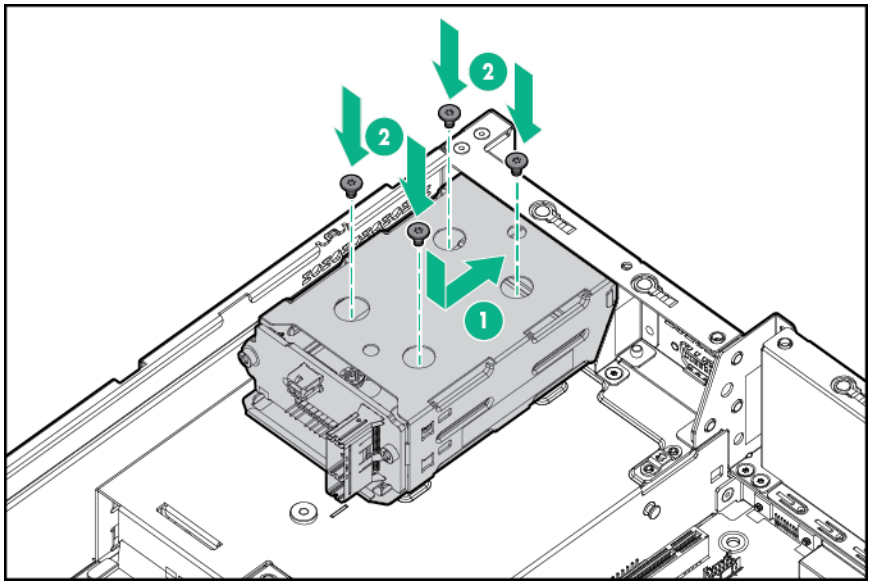

9. Install drives or drive blanks.
10. Install the secondary riser cage or rear wall.
11. **Cable the drive backplane**.
12. **Install the access panel**.
13. Slide the server into the rack.
14. Connect each power cord to the server.
15. Connect each power cord to the power source.
16. **Power up the server**.

The installation is complete.

Installing a rear 3LFF SAS/SATA drive cage

Before installing this option, the front bays must be fully populated with 12 LFF drives. High-performance fans must be installed in all fan bays.

Prerequisites

Before you perform this procedure, make sure that you have the following items available:

- T-10 Torx screwdriver
- The components included with the hardware option kit

Procedure

1. **Power down the server**.
2. Remove all power:
   a. Disconnect each power cord from the power source.
   b. Disconnect each power cord from the server.
3. Do one of the following:
   - **Extend the server from the rack**.
   - **Remove the server from the rack**.
4. **Remove the access panel**.
5. If installed, remove the secondary riser cage. The secondary riser cage is not supported with a three-bay LFF rear configuration.

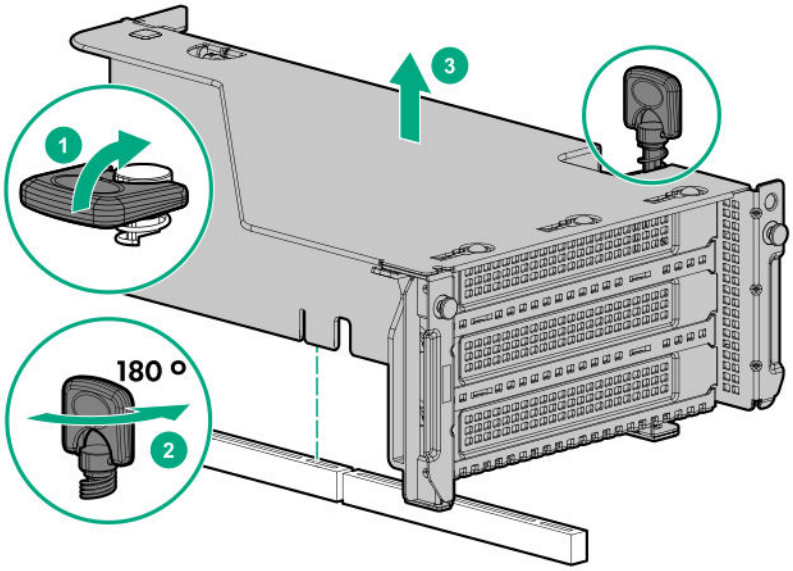

6. Remove the rear wall blank.

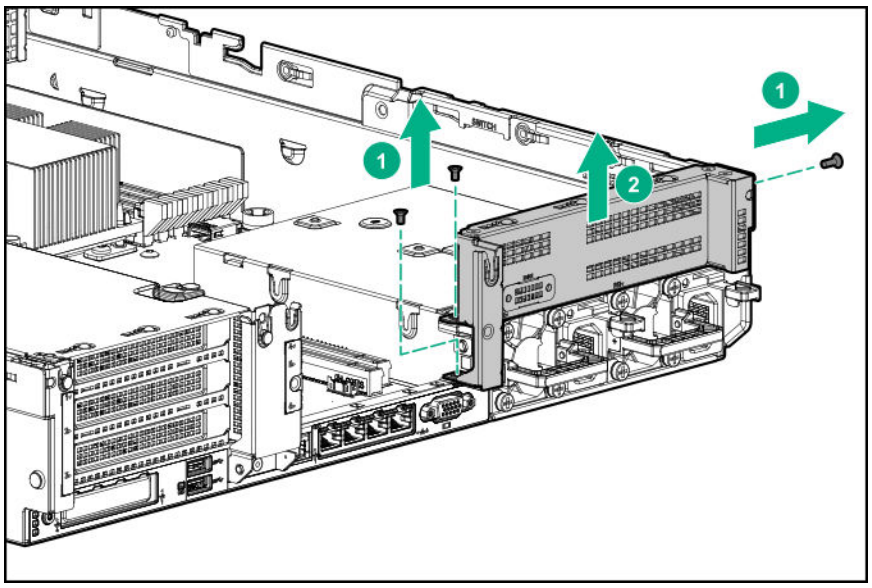

7. Install the three-bay LFF rear drive cage option.

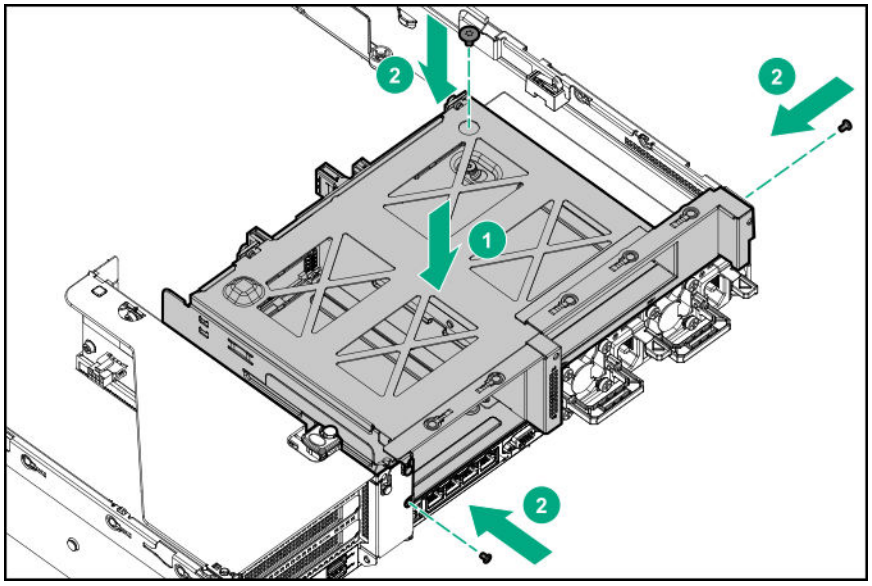

8. Install drives or drive blanks.
9. **Connect the power and data cables**.
10. **Install the access panel**.
11. Slide the server into the rack.
12. Connect each power cord to the server.
13. Connect each power cord to the power source.
14. **Power up the server**.

The installation is complete.

Fan options

CAUTION: To avoid damage to server components, fan blanks must be installed in fan bays 1 and 2 in a single-processor configuration.

CAUTION: To avoid damage to the equipment, do not operate the server for extended periods of time if the server does not have the optimal number of fans installed. Although the server might boot, Hewlett Packard Enterprise does not recommend operating the server without the required fans installed and operating.

Valid fan configurations are listed in the following table.

Configuration	Fan bay 1	Fan bay 2	Fan bay 3	Fan bay 4	Fan bay 5	Fan bay 6
1 processor	Fan blank	Fan blank	Fan	Fan	Fan	Fan
1 processor 24-SFF or 12-LFF configuration with high-performance fans	Fan	Fan	Fan	Fan	Fan	Fan
2 processors	Fan	Fan	Fan	Fan	Fan	Fan

For a single-processor configuration, excluding 24-SFF and 12-LFF configurations, four fans and two blanks are required in specific fan bays for redundancy. A fan failure or missing fan causes a loss of redundancy. A second fan failure or missing fan causes an orderly shutdown of the server.

For a dual-processor configuration or single-processor 24-SFF or 12-LFF configurations, six fans are required for redundancy. A fan failure or missing fan causes a loss of redundancy. A second fan failure or missing fan causes an orderly shutdown of the server.

High-performance fans might be necessary in 24-SFF and 12-LFF configurations for the following installations:

- Optional GPU riser installations
- ASHRAE compliant configurations

  For more information, see the **Hewlett Packard Enterprise website**.

The server supports variable fan speeds. The fans operate at minimum speed until a temperature change requires a fan speed increase to cool the server. The server shuts down during the following temperature-related scenarios:

- At POST and in the OS, iLO performs an orderly shutdown if a cautionary temperature level is detected. If the server hardware detects a critical temperature level before an orderly shutdown occurs, the server performs an immediate shutdown.
- When the Thermal Shutdown feature is disabled in the BIOS/Platform Configuration (RBSU), iLO does not perform an orderly shutdown when a cautionary temperature level is detected. Disabling this feature does not disable the server hardware from performing an immediate shutdown when a critical temperature level is detected.

  CAUTION: A thermal event can damage server components when the Thermal Shutdown feature is disabled in the BIOS/Platform Configuration (RBSU).

Installing high-performance fans

CAUTION: Caution: To prevent damage server, ensure that all DIMM latches are closed and locked before installing the fans.

CAUTION: Do not operate the server for long periods with the access panel open or removed. Operating the server in this manner results in improper airflow and improper cooling that can lead to thermal damage.

Procedure

1. **Extend the server from the rack**.
2. **Remove the access panel**.
3. If installed, remove all fan blanks.

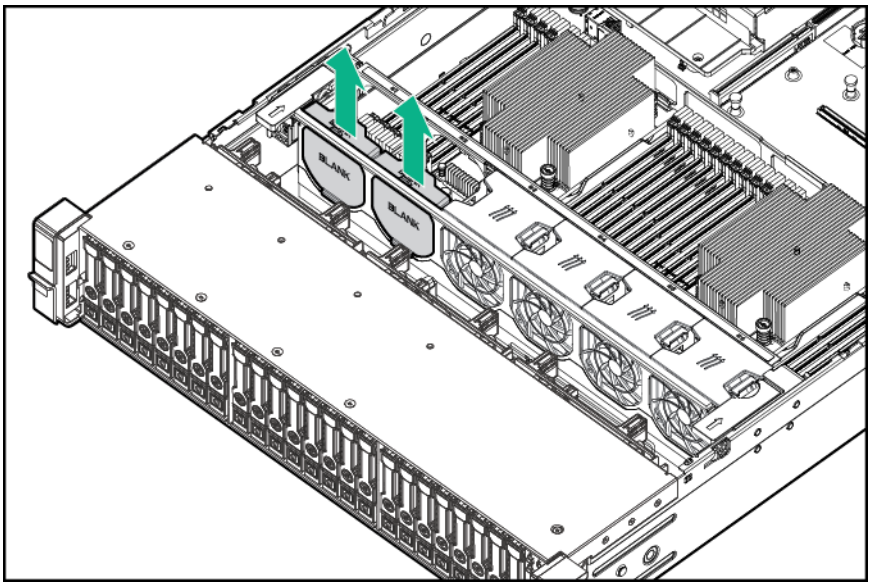

4. **Remove the air baffle**.
5. Remove all standard fans.

IMPORTANT: Do not mix standard fans and high-performance fans in the same server.

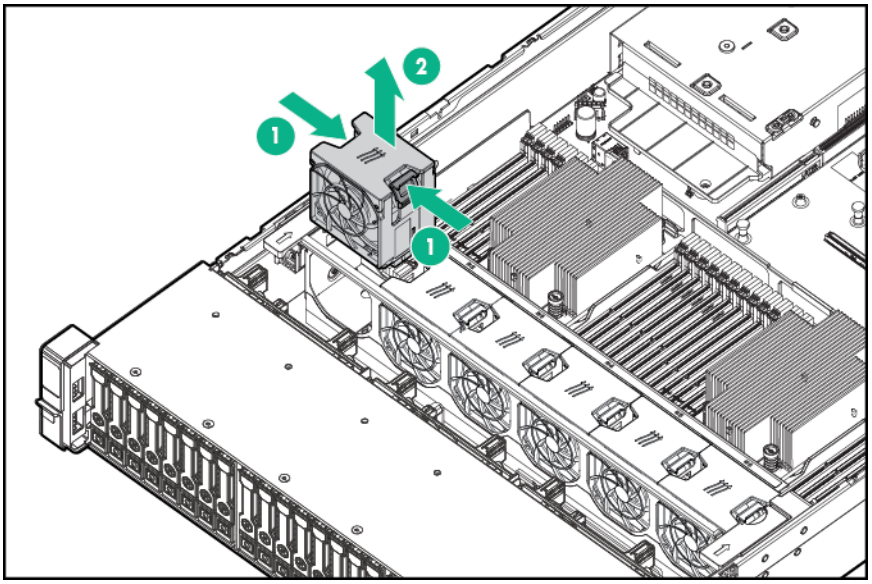

6. Install high-performance fans in all fan bays.

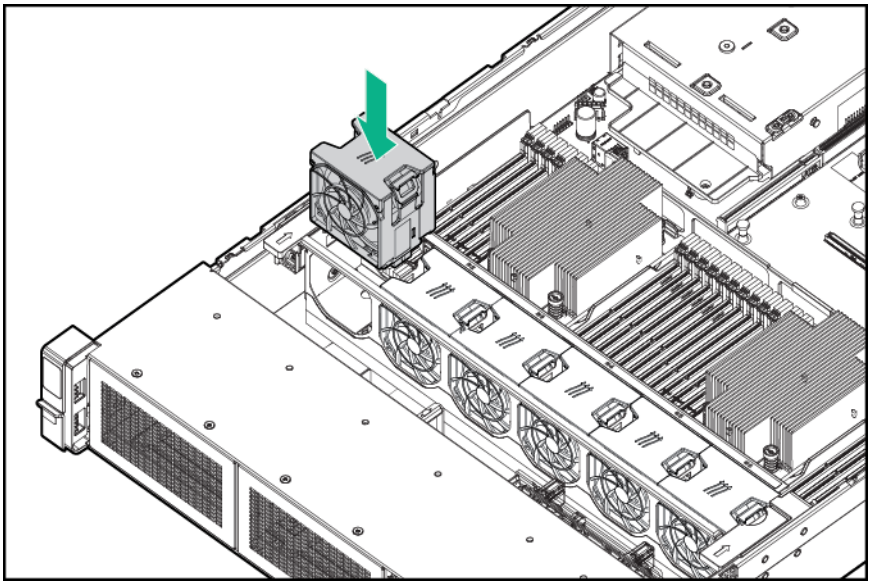

7. **Install the air baffle**.
8. **Install the access panel**.
9. **Install the server into the rack**.

Processor and heatsink options

Installing a processor

Hewlett Packard Enterprise recommends **identifying the processor and socket components** before performing this procedure.

Prerequisites

Before you perform this procedure, make sure that you have the following items available:

- The components included with the hardware option kit
- T-20 Torx screwdriver
- 1.0 gm (0.5 ml) or two 0.5 gm (0.25 ml) of thermal grease
- Alcohol wipe

Procedure

1. Observe the following alerts:

CAUTION: To avoid damage to the processor or system board, only authorized personnel should attempt to replace or install the processor in this server.

CAUTION: To prevent possible server malfunction and damage to the equipment, multiprocessor configurations must contain processors with the same part number.

CAUTION: If installing a processor with a faster speed, update the system ROM before installing the processor.

To download firmware and view installation instructions, see the **Hewlett Packard Enterprise Support Center website**.

CAUTION: THE CONTACTS ARE VERY FRAGILE AND EASILY DAMAGED. To avoid damage to the socket or processor, do not touch the contacts.

2. **Power down the server**.
3. Remove all power:
   a. Disconnect each power cord from the power source.
   b. Disconnect each power cord from the server.
4. Do one of the following:
   - **Extend the server from the rack**.
   - **Remove the server from the rack**.
5. **Remove the access panel**.
6. Do one of the following:
   - **Remove the air baffle**.
   - **If installed, remove the 4LFF midplane drive cage**.
7. Remove the heatsink blank.
8. Use a T-20 Torx screwdriver to loosen the three captive screws in the sequence shown in the following image, and then pivot the force frame upward.

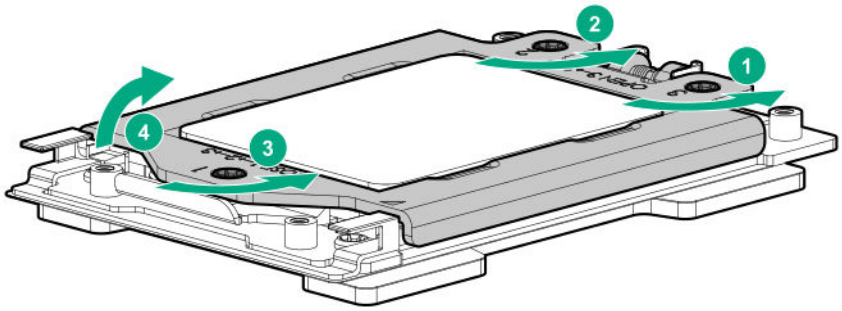

9. Remove the external cap:
   a. Hold the lift tabs near the front end of the rail frame, and then pivot the rail frame to the vertical position.
   b. Slide the external cap out of the rail frame.

      Retain the external cap for future use.

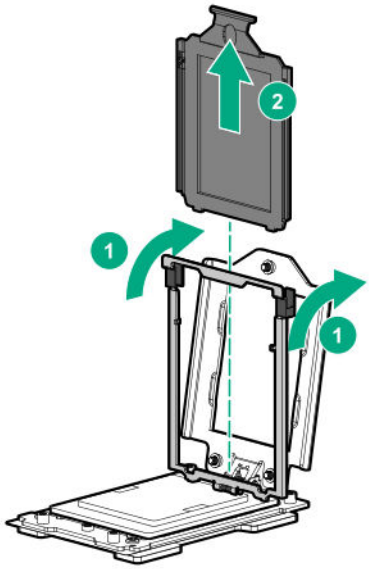

10. Install the processor:

a. Hold the processor by its carrier handle and slide the processor into the rail frame until it engages with a click sound.

b. Remove the pin field cover cap.

CAUTION: To prevent the risk of damaging the pins in the processor socket, do not reinstall the pin field cover cap after removing it.

c. Hold the lift tabs near the front end of the rail frame, and then pivot the rail frame to the closed position.

A click sound indicates that the rail frame is properly engaged.

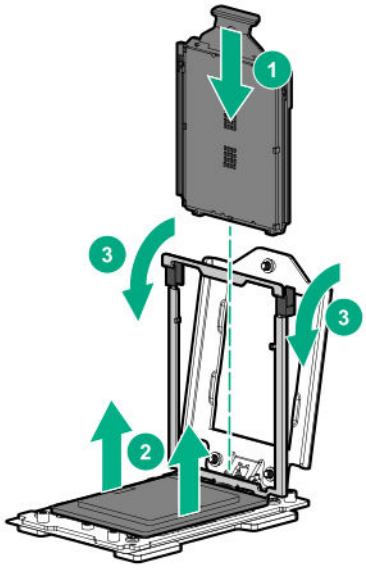

11. Close the force frame:

CAUTION: Do not overtighten the screws as this might damage the system board or the processor socket.

a. Pivot the spring loaded force frame downward and hold it down (callout 1).

b. Use a T-20 Torx screwdriver to tighten the captive screws in the sequence shown in the following image (callouts 2–4).

When using a torque wrench to tighten the screws, apply a torque of 1.58 N · m (14 lbf-in).

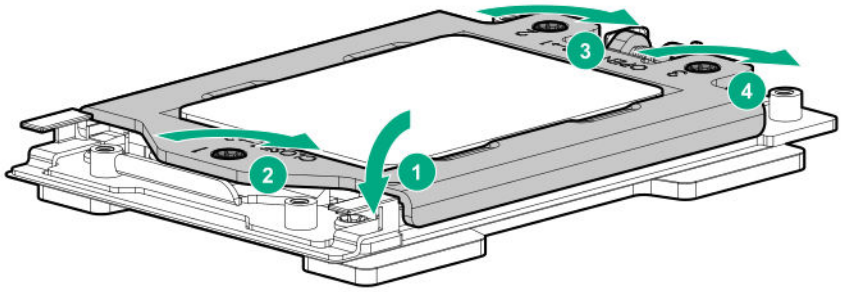

12. Remove the thermal interface protective cover from the new heatsink.

13. Install the heatsink:

CAUTION: To prevent mechanical damage or depositing oil on your hands or other contaminant to the heatsink contact surface, hold the heatsink only by the edge of its base plate. Do not touch the heatsink fins.

CAUTION: To prevent thermal failure or component damage, do not move the heatsink once the bottom of its base plate touches the top of the processor. Excessive heatsink movement can cause the thermal grease to smear and become uneven. Voids in the compound can adversely impact the transfer of heat away from the processor.

CAUTION: Heatsink screws must be tightened and loosened in alternating sequence. Do not overtighten the screws as this might damage the system board or the processor socket.

a. Position the heatsink on top of the processor, ensuring that it is properly seated before securing the screws.

b. Use a T-20 Torx screwdriver to tighten the captive screws in the sequence specified on the heatsink label.

When using a torque wrench to tighten the screws, apply a torque of 1.58 N-m (14 lbf-in).

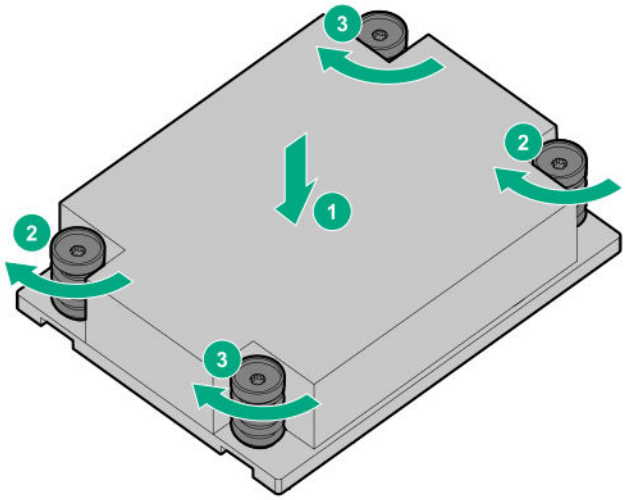

14. Do one of the following:
    - **Install the air baffle**.
    - Perform steps 9–13 of "**Installing a midplane 4LFF SAS/SATA drive cage**".
15. **Install the access panel**.
16. **Install the server into the rack**.
17. Connect each power cord to the server.
18. Connect each power cord to the power source.
19. **Power up the server**.

The installation is complete.

Installing a 1U or high-performance heatsink

This procedure shows a standard heatsink as an example. The installation process is the same for both the standard and high-performance heatsinks.

Hewlett Packard Enterprise recommends **identifying the processor and socket components** before performing this procedure.

Prerequisites

Before you perform this procedure, make sure that you have the following items available:

- The components included with the hardware option kit
- T-20 Torx screwdriver
- 1.0 gm (0.5 ml) or two 0.5 gm (0.25 ml) of thermal grease
- Alcohol wipe

Procedure

1. **Power down the server**.
2. Remove all power:
   a. Disconnect each power cord from the power source.
   b. Disconnect each power cord from the server.
3. Do one of the following:
   - **Extend the server from the rack**.
   - **Remove the server from the rack**.
4. **Remove the access panel**.
5. Do one of the following:
   - **Remove the air baffle**.
   - **If installed, remove the 4LFF midplane drive cage**.
6. Allow the existing heatsink to cool.
7. Remove the heatsink:

   CAUTION: To prevent mechanical damage or depositing oil on your hands or other contaminant to the heatsink contact surface, hold the heatsink only by the edge of its base plate. Do not touch the heatsink fins.

   CAUTION: Heatsink screws must be tightened and loosened in alternating sequence. Do not overtighten the screws as this might damage the system board or the processor socket.

   a. Use a T-20 Torx screwdriver to loosen the captive screws in the sequence specified on the heatsink label.
   b. Lift the heatsink away from the system board.

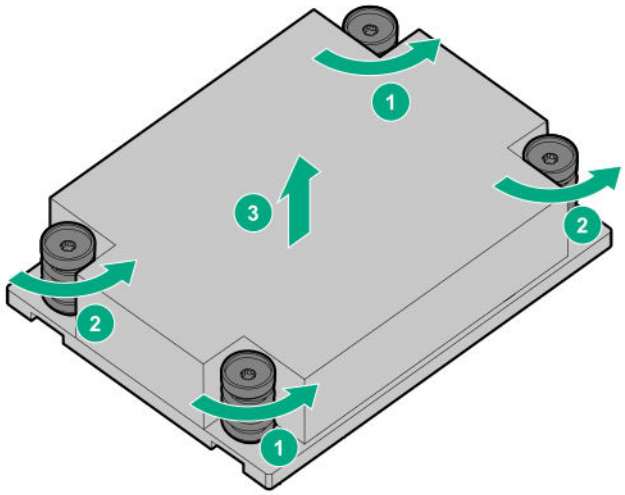

c. Place the heatsink on a flat work surface with its contact side facing upward.

8. Use an alcohol wipe to remove the existing thermal grease from the processor.

Allow the alcohol to evaporate before continuing.

9. Remove the thermal interface protective cover from the new heatsink.

10. Install the heatsink:

CAUTION: To prevent mechanical damage or depositing oil on your hands or other contaminant to the heatsink contact surface, hold the heatsink only by the edge of its base plate. Do not touch the heatsink fins.

CAUTION: To prevent thermal failure or component damage, do not move the heatsink once the bottom of its base plate touches the top of the processor. Excessive heatsink movement can cause the thermal grease to smear and become uneven. Voids in the compound can adversely impact the transfer of heat away from the processor.

CAUTION: Heatsink screws must be tightened and loosened in alternating sequence. Do not overtighten the screws as this might damage the system board or the processor socket.

a. Position the heatsink on top of the processor, ensuring that it is properly seated before securing the screws.

b. Use a T-20 Torx screwdriver to tighten the captive screws in the sequence specified on the heatsink label.

When using a torque wrench to tighten the screws, apply a torque of 1.58 N-m (14 lbf-in).

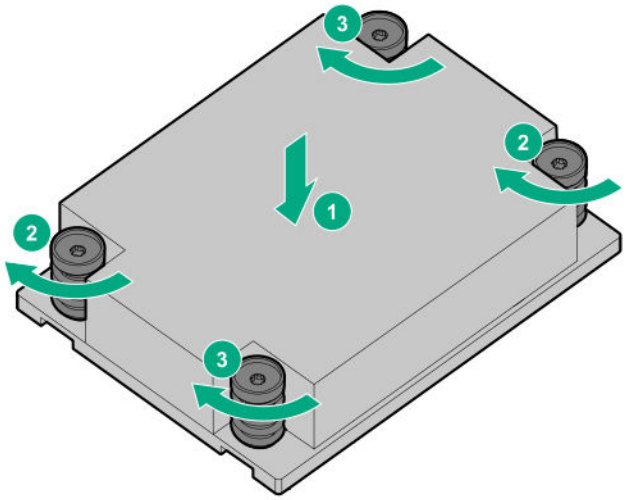

11. Do one of the following:
    - **Install the air baffle**.
    - Perform steps 9–13 of "**Installing a midplane 4LFF SAS/SATA drive cage**".
12. **Install the access panel**.
13. **Install the server into the rack**.
14. Connect each power cord to the server.
15. Connect each power cord to the power source.
16. **Power up the server**.

The installation is complete.

Memory options

IMPORTANT: This server does not support mixing LRDIMMs and RDIMMs. Attempting to mix any combination of these DIMMs can cause the server to halt during BIOS initialization. All memory installed in the server must be of the same type.

DIMM-processor compatibility

The installed processor determines the type of DIMM that is supported in the server:

- AMD EPYC 7xx1 processors support DDR4-2666 DIMMs.
- AMD EPYC 7xx2 processors support DDR4-2933 DIMMs.

Mixing DIMM types is not supported. Install only the supported DDR4-2666 or DDR4-2933 DIMMs in the server.

DIMM population information

For DIMM population information, see the DIMM population guidelines specific to the type of processor installed in the server:

- AMD EPYC 7xx1 processors— **https://www.hpe.com/docs/amd-population-rules**
- AMD EPYC 7xx2 processors— **https://www.hpe.com/docs/amd-population-rules-Gen10Plus**

Memory speed tables

For specific DDR4 server memory speeds, for HPE servers using AMD processors, see the Hewlett Packard Enterprise website (**https://www.hpe.com/docs/amd-speed-tables**).

Installing a DIMM

The server has **32 DIMM slots**.

Prerequisites

Before installing this option, be sure you have the components included with the hardware option kit.

Procedure

1. **Power down the server**.
2. Remove all power:
   a. Disconnect each power cord from the power source.
   b. Disconnect each power cord from the server.
3. Do one of the following:
   - **Extend the server from the rack**.
   - **Remove the server from the rack**.
4. **Remove the access panel**.
5. Do one of the following:
   - **Remove the air baffle**.
   - **If installed, remove the 4 LFF midplane drive cage**.
6. Install the DIMM:
   a. Open the DIMM slot latches.
   b. Align the notch on the bottom edge of the DIMM with the keyed surface of the DIMM slot, and then fully press the DIMM into the slot until the latches snap back into place.

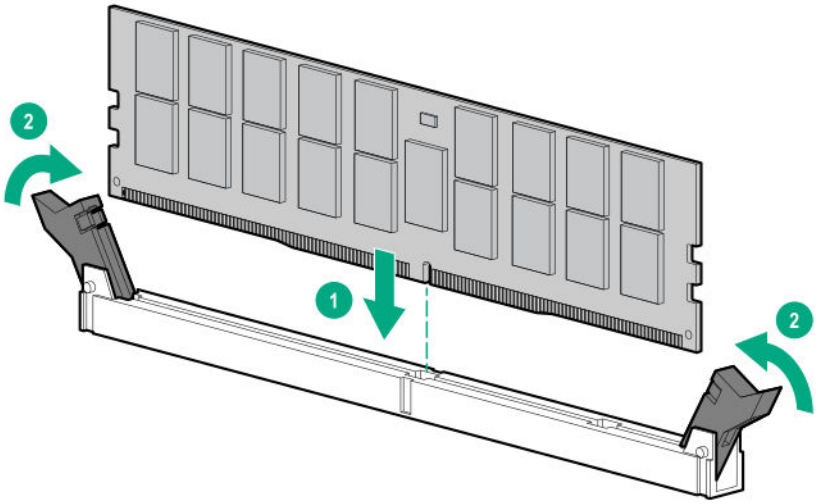

The DIMM slots are structured to ensure proper installation. If you try to insert a DIMM but it does not fit easily into the slot, you might have positioned it incorrectly. Reverse the orientation of the DIMM and insert it again.

7. Do one of the following:
   - **Install the air baffle**.
   - Perform steps 9–13 of "**Installing a midplane 4LFF SAS/SATA drive cage**".
8. **Install the access panel**.
9. **Install the server into the rack**.
10. Connect each power cord to the server.
11. Connect each power cord to the power source.
12. **Power up the server**.

Use the BIOS/Platform Configuration (RBSU) in the UEFI System Utilities to configure the memory mode.

For more information about LEDs and troubleshooting failed DIMMs, see "**Systems Insight Display combined LED descriptions**".

Controller options

The server supports the following storage controllers:

- Embedded controllers

  Enabled through System Utilities and configured through HPE Smart Storage Administrator (Intelligent Provisioning).
- Type-a controllers

  Type-a controllers install in the type-a smart array connector.
- Type-p controllers

  Type-p controllers install in a PCIe expansion slot.

Installing a storage controller

Prerequisites

Before you perform this procedure, make sure that you have the components included with the hardware option kit.

Procedure

1. **Power down the server**.
2. Remove all power:
   a. Disconnect each power cord from the power source.
   b. Disconnect each power cord from the server.
3. Do one of the following:
   - **Extend the server from the rack**.
   - **Remove the server from the rack**.
4. **Remove the access panel**.
5. Do one of the following:
   - **Remove the air baffle**.
   - **If installed, remove the 4 LFF midplane drive cage**.
6. Do one of the following:
   - For Type-a Smart Array controllers, install the controller in the Smart Array modular controller connector.

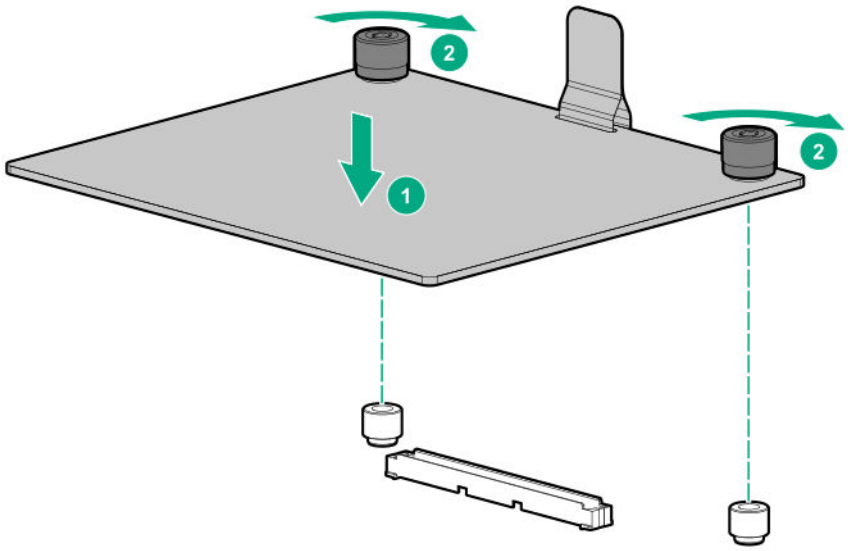

   - For Type-p Smart Array controllers, **install the controller in a compatible expansion slot**.
7. **Cable the controller**.

The installation is complete.

Energy pack options

Hewlett Packard Enterprise offers two centralized backup power source options to back up write cache content on P-class Smart Array controllers in case of an unplanned server power outage.

- **HPE Smart Storage Battery**
- **HPE Smart Storage Hybrid Capacitor**

> **IMPORTANT:** The HPE Smart Storage Hybrid Capacitor is only supported on Gen10 and later servers.

One energy pack option can support multiple devices. An energy pack option is required for P-class Smart Array controllers. Once installed, the status of the energy pack displays in HPE iLO. For more information, see the HPE iLO user guide on the Hewlett Packard Enterprise website (**https://www.hpe.com/support/ilo-docs**).

HPE Smart Storage Battery

The HPE Smart Storage Battery supports the following devices:

- HPE Smart Array SR controllers
- HPE Smart Array MR controllers

A single 96W battery can support up to 24 devices.

After the battery is installed, it might take up to two hours to charge. Controller features requiring backup power are not re-enabled until the battery is capable of supporting the backup power.

This server supports the 96W HPE Smart Storage Battery with the 145mm cable.

HPE Smart Storage Hybrid Capacitor

The HPE Smart Storage Hybrid Capacitor supports the following devices:

- HPE Smart Array SR controllers
- HPE Smart Array MR controllers

The capacitor pack can support up to three devices.

This server supports the HPE Smart Storage Hybrid Capacitor with the 145mm cable.

Before installing the HPE Smart Storage Hybrid Capacitor, verify that the system BIOS meets the minimum firmware requirements to support the capacitor pack.

> **IMPORTANT:** If the system BIOS or controller firmware is older than the minimum recommended firmware versions, the capacitor pack will only support one device.

The capacitor pack is fully charged after the system boots.

Minimum firmware versions

Product	Minimum firmware version
HPE ProLiant server system ROM	1.40
HPE Smart Array SR controllers	1.90
HPE Smart Array MR controllers	24.23.0-0041

Installing an energy pack

Prerequisites

Before you perform this procedure, make sure that you have the following items available:

- T-10 Torx screwdriver
- The components included with the hardware option kit
- Storage controller backup power cable (ships with the storage controller)
- **Make sure that a Smart Array P-class Gen10 controller is installed**.
- If you are installing the HPE Smart Storage Hybrid Capacitor, **verify that the system BIOS meets the minimum firmware requirements**.

Procedure

1. **Power down the server**.
2. Remove all power:
   a. Disconnect each power cord from the power source.
   b. Disconnect each power cord from the server.
3. Do one of the following:
   - **Extend the server from the rack**.
   - **Remove the server from the rack**.
4. **Remove the access panel**.
5. Do one of the following:
   - **Remove the air baffle**.
   - **If installed, remove the 4LFF midplane drive cage**.
6. **Remove the fan cage**.
7. Install the energy pack.

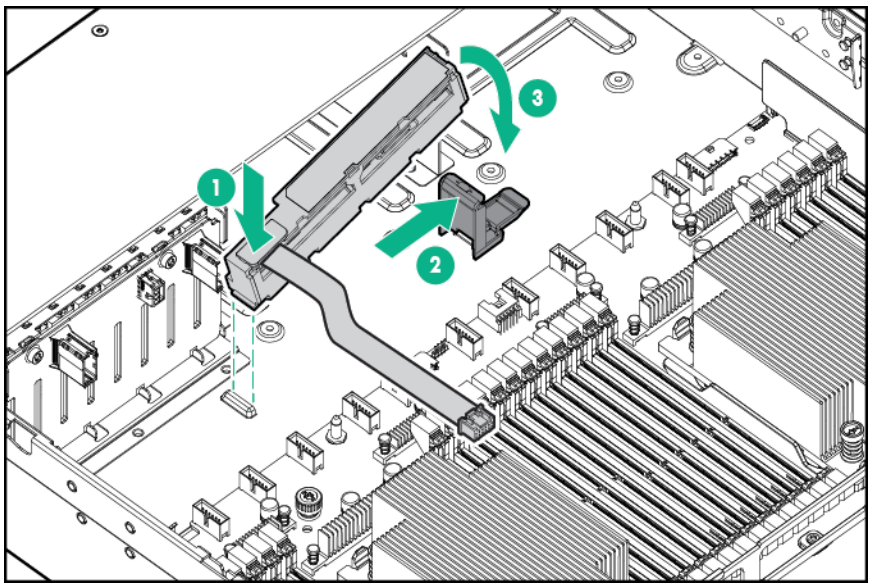

8. Connect the energy pack cable.

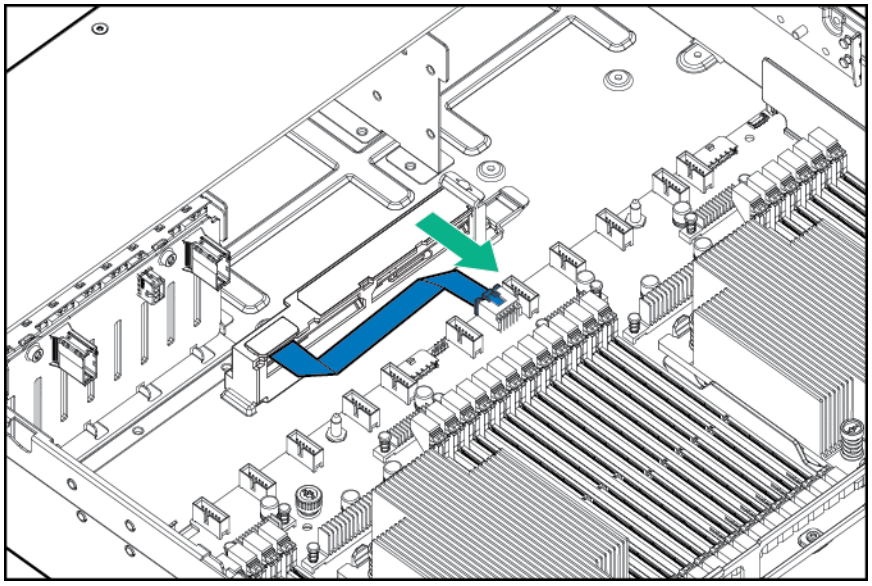

9. **Connect the storage controller backup power cable**.
10. **Install the fan cage**.
11. Do one of the following:
    - **Install the air baffle**.
    - Perform steps 9–13 of "**Installing a midplane 4LFF SAS/SATA drive cage**".
12. **Install the access panel**.
13. **Install the server into the rack**.
14. Connect each power cord to the server.
15. Connect each power cord to the power source.
16. **Power up the server**.

The installation is complete.

Riser and riser cage options

Installing primary and secondary risers

Prerequisites

Before you perform this procedure, make sure that you have the following items available:

- The components included with the hardware option kit
- T-10 Torx screwdriver

Procedure

1. **Power down the server**.
2. Do one of the following:
   - Disconnect each power cord from the power source.
   - Disconnect each power cord from the server.
3. Do one of the following:
   - **Extend the server from the rack**.
   - **Remove the server from the rack**.
4. **Remove the access panel**.
5. **Remove the riser cage**.
6. Remove the riser board.

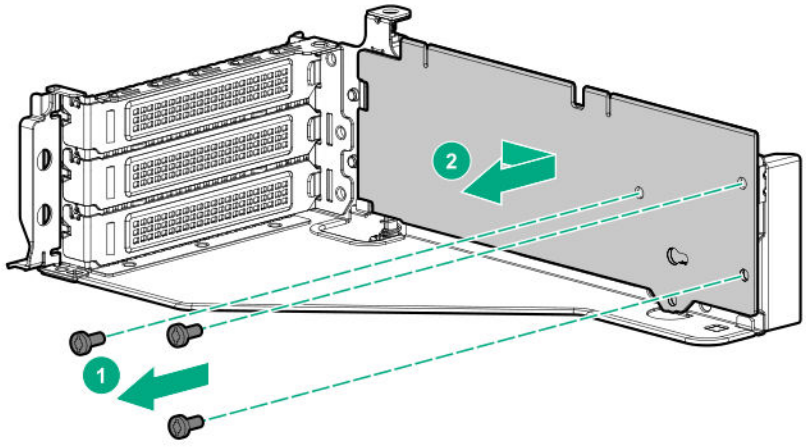

7. Install the riser.

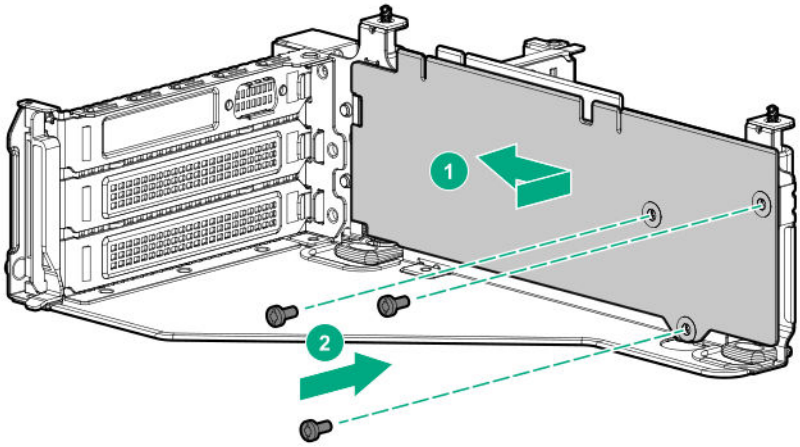

8. **If needed, install an expansion board**.
9. If needed, connect data cables to the riser or expansion board.
10. **Install the riser cage**.
11. If needed, connect data cables to the drive backplane.

The installation is complete.

Installing tertiary risers

Prerequisites

Before you perform this procedure, make sure that you have the following items available:

- The components included with the hardware option kit
- T-10 Torx screwdriver
- A tertiary riser cage is required to install this option.

Procedure

1. **Power down the server**.
2. Do one of the following:
   - Disconnect each power cord from the power source.
   - Disconnect each power cord from the server.
3. Do one of the following:
   - **Extend the server from the rack**.
   - **Remove the server from the rack**.
4. **Remove the access panel**.
5. **Remove the riser cage**.
6. Install the riser.

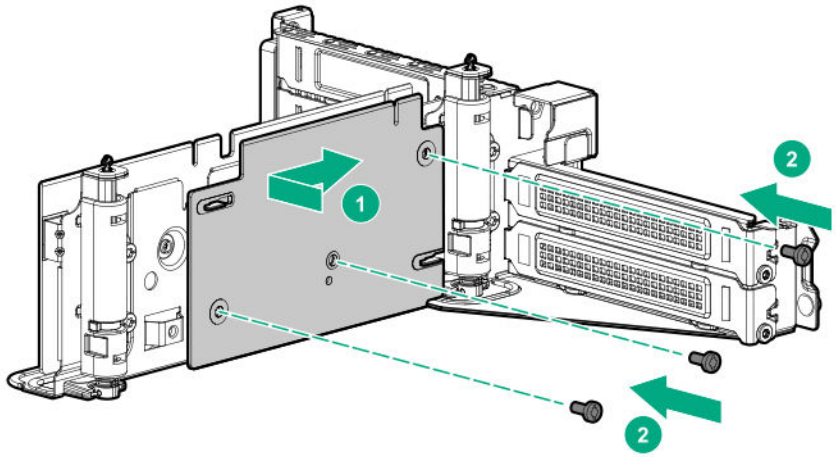

7. **If needed, install an expansion board**.
8. If needed, connect data cables to the riser or expansion board.
9. **Install the tertiary riser cage**.
10. If needed, connect cables to drive backplane.

The installation is complete.

Installing a secondary riser cage

Prerequisites

Before you perform this procedure, make sure that you have the following items available:

- The components included with the hardware option kit
- T-10 Torx screwdriver

Procedure

1. Observe the following alert:

   CAUTION: To prevent damage to the server or expansion boards, power down the server and remove all AC power cords before removing or installing the PCI riser cage.

2. **Power down the server**.
3. Remove all power:
   a. Disconnect each power cord from the power source.
   b. Disconnect each power cord from the server.
4. Do one of the following:
   - **Extend the server from the rack**.
   - **Remove the server from the rack**.
5. **Remove the access panel**.

6. Remove the rear wall blank.

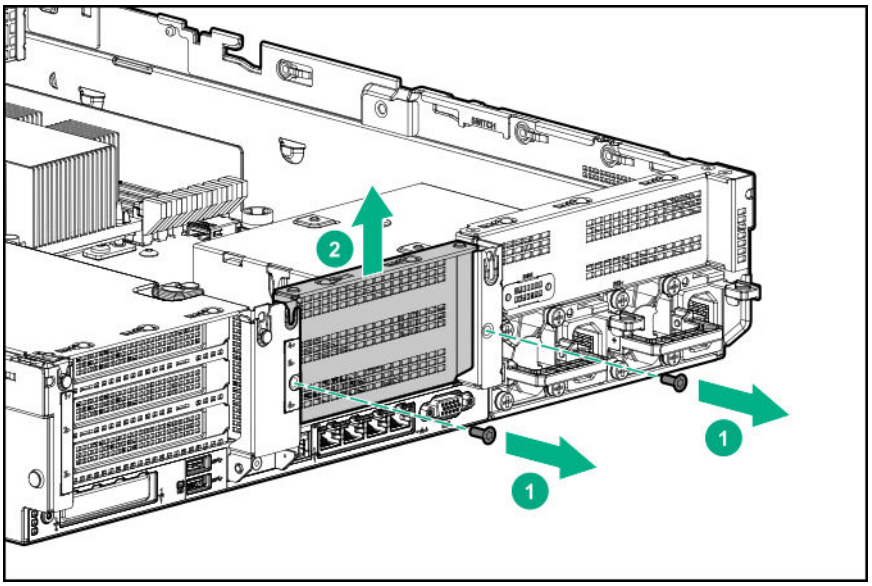

7. **Install any expansion boards, if needed**.
8. Install the riser cage:

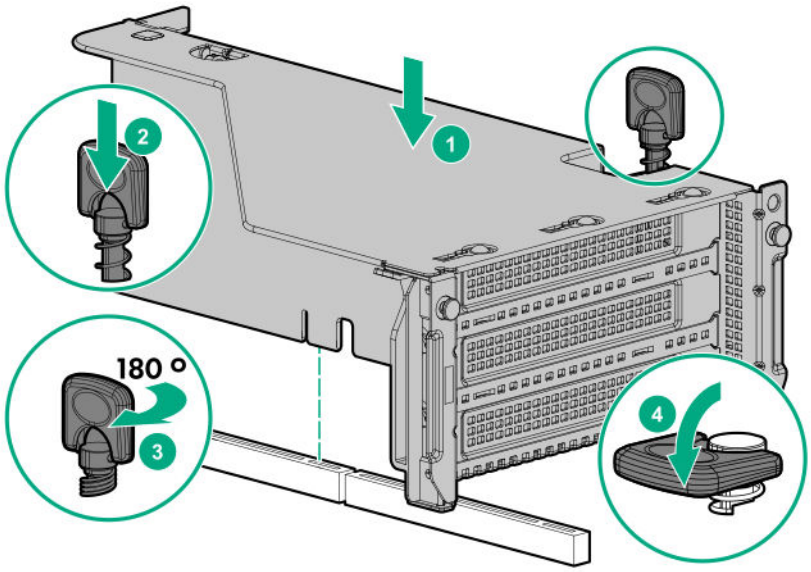

The installation is complete.

Installing a tertiary riser cage

Prerequisites

Before you perform this procedure, make sure that you have the following items available:

- The components included with the hardware option kit
- T-10 Torx screwdriver

Procedure

1. Observe the following alert.

   CAUTION: To prevent damage to the server or expansion boards, power down the server and remove all AC power cords before removing or installing the PCI riser cage.

2. **Power down the server**.
3. Remove all power:
   a. Disconnect each power cord from the power source.
   b. Disconnect each power cord from the server.
4. Do one of the following:
   - **Extend the server from the rack**.
   - **Remove the server from the rack**.
5. **Remove the access panel**.
6. Remove the rear wall blanks.

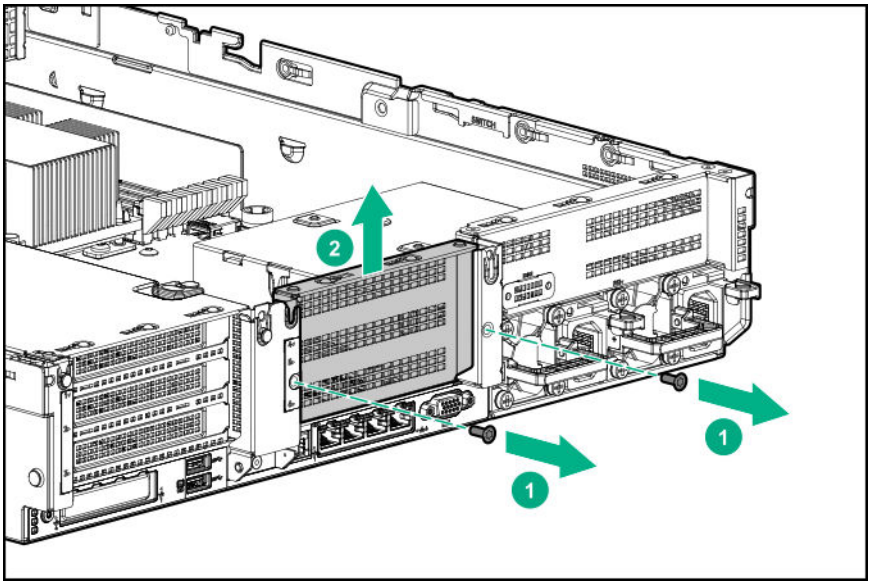

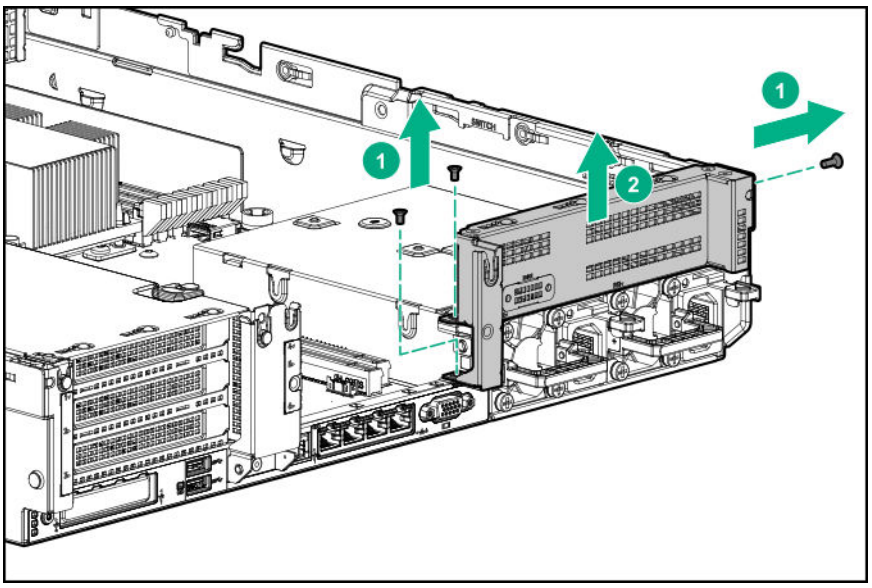

7. Install the rear blank from the option kit.

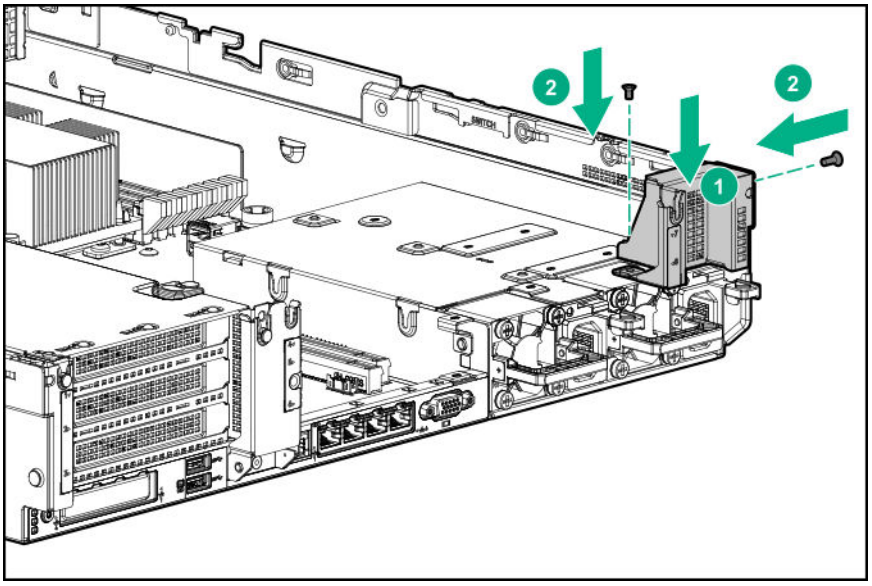

8. **Install any expansion boards, if needed**
9. Install the tertiary riser cage:

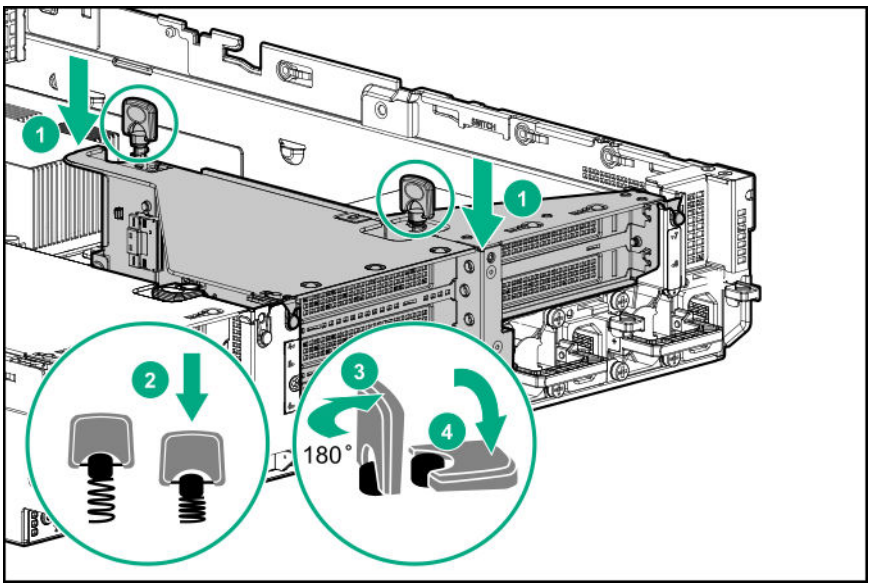

The installation is complete.

Installing the 2NVMe slimSAS riser option

Prerequisites

Before you perform this procedure, make sure that you have the following items available:

- The components included with the hardware option kit
- T-10 Torx screwdriver

Procedure

1. **Power down the server**.
2. Do one of the following:
   - Disconnect each power cord from the power source.
   - Disconnect each power cord from the server.
3. Do one of the following:
   - **Extend the server from the rack**.
   - **Remove the server from the rack**.
4. **Remove the access panel**.
5. **Using the labels on the cable, connect the cables to the riser**.
6. **Install the tertiary riser cage**.
7. Connect the cable to the drive backplane.

The installation is complete.

Installing the 8NVMe slimSAS riser option

The 8NVMe slimSAS riser can be installed in the primary or secondary position.

Prerequisites

Before you perform this procedure, make sure that you have the following items available:

- The components included with the hardware option kit
- T-10 Torx screwdriver

Procedure

1. **Power down the server**.
2. Do one of the following:
   - Disconnect each power cord from the power source.
   - Disconnect each power cord from the server.
3. Do one of the following:
   - **Extend the server from the rack**.
   - **Remove the server from the rack**.
4. **Remove the access panel**.
5. **Using the labels on the cable, connect the cables to the riser**.
6. Do one of the following:
   To install the riser in the primary position:

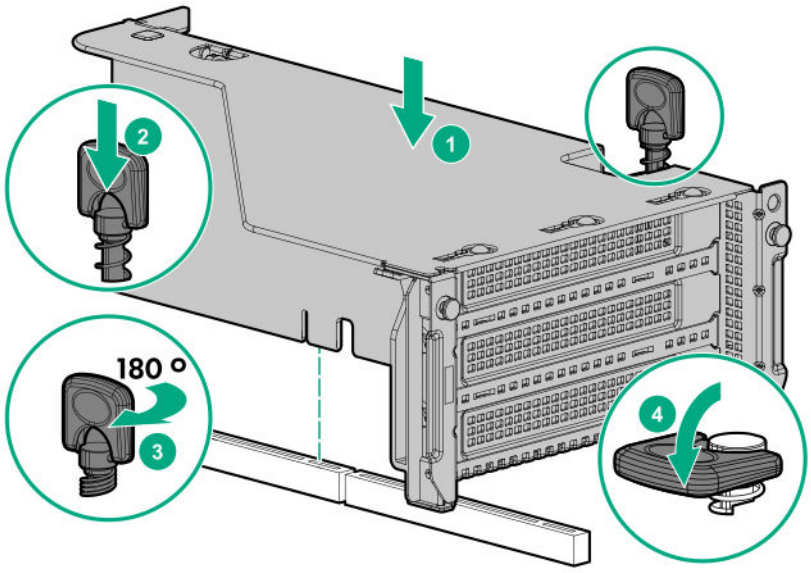

   To install the riser in the secondary position, install the **secondary riser cage**.
7. Connect data cables to the drive backplane.

Expansion slots

Supported PCIe form factors

All slots support full-height expansion cards. Use the following information to find supported lengths for each slot.

Slot description example

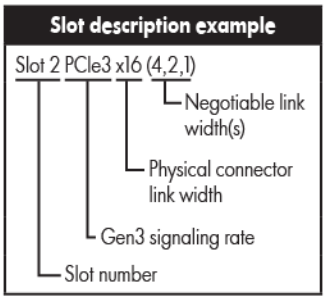

Primary riser connector

PCIe slot and card length	3-slot riser*	2-slot riser (Optional)	2-slot riser (Optional)
Slot 1 - Full-length/Full-height (FL/FH)	PCIe3 x8 (8, 4, 2, 1)	—	PCIe3 x16 (16, 8, 4, 2, 1)
Slot 2 - Full-length/Full-height (FL/FH)	PCIe3 x16 (16, 8, 4, 2, 1)	PCIe3 x16 (16, 8, 4, 2, 1)	PCIe3 x16 (16, 8, 4, 2, 1)
Slot 3 - Half-length/Full-height (HL/FH)	PCIe3 x8 (8, 4, 2, 1)	PCIe3 x16 (16, 8, 4, 2, 1)	—

*The server ships with one PCIe3 riser cage installed in the primary riser cage connector.

Secondary riser connector

PCIe slot and card length	3-slot riser*	2-slot riser (Optional)	2-slot riser (Optional)
Slot 4 - Full-length/Full-height (FL/FH)	PCIe3 x8 (8, 4, 2, 1)	—	PCIe3 x16 (16, 8, 4, 2, 1)
Slot 5 - Full-length/Full-height (FL/FH)	PCIe3 x16 (16, 8, 4, 2, 1)	PCIe3 x16 (16, 8, 4, 2, 1)	PCIe3 x16 (16, 8, 4, 2, 1)
Slot 6 - Half-length/Full-height (HL/FH)	PCIe3 x8 (8, 4, 2, 1)	PCIe3 x16 (16, 8, 4, 2, 1)	—

Tertiary riser connector

PCIe slot and card length	2-slot riser (Optional)	1-slot riser (Optional)
Slot 7 - Full-length/Full-height (FL/FH)	PCIe3 x8 (8, 4, 2, 1)	PCIe3 x16 (16, 8, 4, 2, 1)
Slot 8 - Half-length/Full-height (HL/FH)	PCIe3 x8 (8, 4, 2, 1)	—

Installing expansion boards

WARNING: To reduce the risk of personal injury, electric shock, or damage to the equipment, remove the power cord to remove power from the server. The front panel Power On/Standby button does not completely shut off system power. Portions of the power supply and some internal circuitry remain active until AC power is removed.

CAUTION: To prevent improper cooling and thermal damage, do not operate the server unless all PCI slots have either an expansion slot cover or an expansion board installed.

To install the component:

Prerequisites

Use these instructions to install expansion boards such as Smart I/O cards (DSC-25 2-port SFP28 card), solid state NVMe/PCIe Add-In-Cards, HBAs, CNAs, InfiniBand adapters, and accelerators.

Before you perform this procedure, make sure that you have the following items available:

The components included with the hardware option kit

Procedure

1. **Power down the server**.
2. Remove all power:
   a. Disconnect each power cord from the power source.
   b. Disconnect each power cord from the server.
3. Do one of the following:
   - **Extend the server from the rack**.
   - **Remove the server from the rack**.
4. **Remove the access panel**.
5. Remove the riser cage.

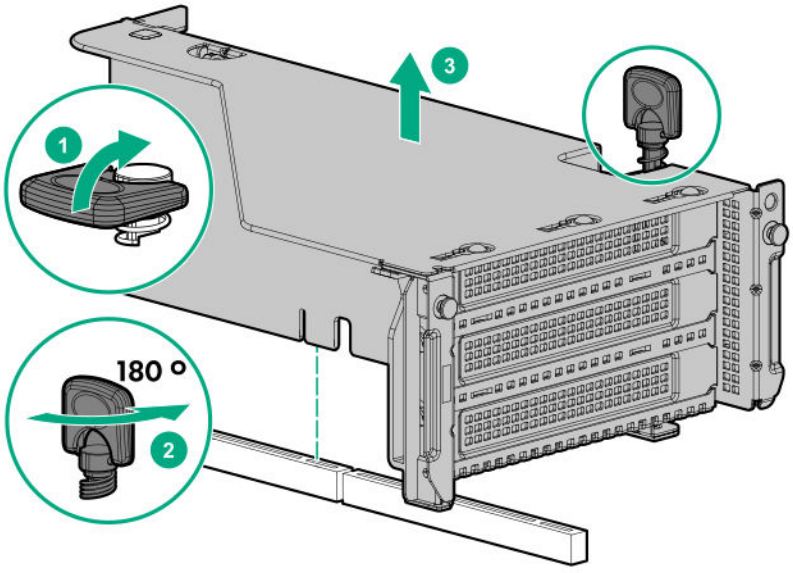

6. Identify and then remove the PCIe blank from the riser cage.

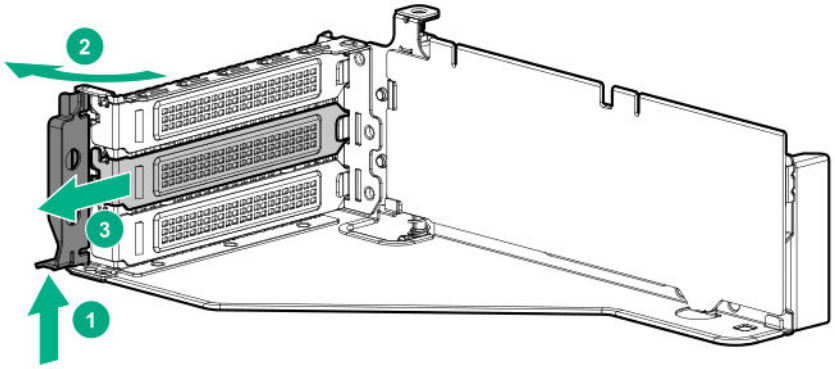

7. Install the expansion board.

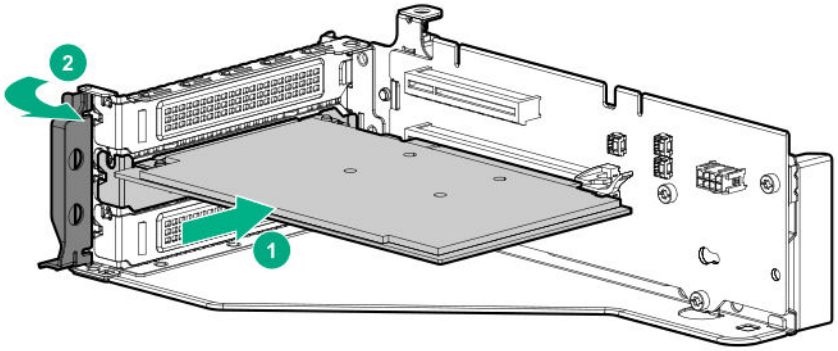

8. If internal cables are required for the expansion board, connect the cables.
9. Install the riser cage.

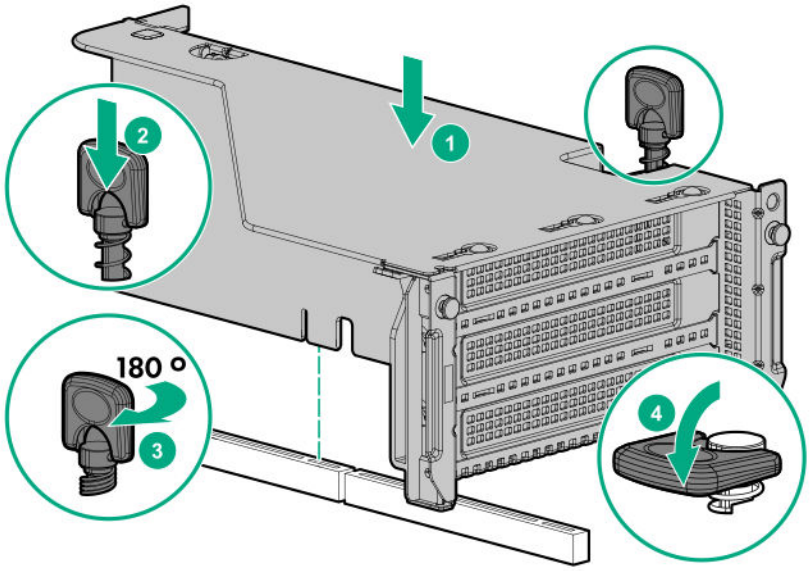

10. **Install the access panel**.
11. Slide the server into the rack.
12. Connect each power cord to the server.

13. Connect each power cord to the power source.
14. **Power up the server**.

The installation is complete.

Installing a 12G SAS Expander Card

- For 24SFF configurations, install 8SFF front drive cages in boxes 1 and 2.
- For configurations including a 2SFF rear drive cage, install the drive cage over the power supplies.
- HPE recommends installing the SAS expander card into slot 3 of the primary PCIe riser.
- To ensure that cables are connected correctly, observe the labels on the cable and port.
- Be sure that you have the latest firmware for the controllers and the expander card. To download the latest firmware, see the **Hewlett Packard Enterprise website**.

Prerequisites

Before you perform this procedure, make sure that you have the following items available:

- The components included with the hardware option kit
- Storage cables for each drive box
- A storage controller

Procedure

1. **Power down the server**.
2. Remove all power:
   a. Disconnect each power cord from the power source.
   b. Disconnect each power cord from the server.
3. Do one of the following:
   - **Extend the server from the rack**.
   - **Remove the server from the rack**.
4. **Remove the access panel**.
5. **Remove the air baffle**.
6. **Remove the fan cage**.
7. Remove the riser cage.

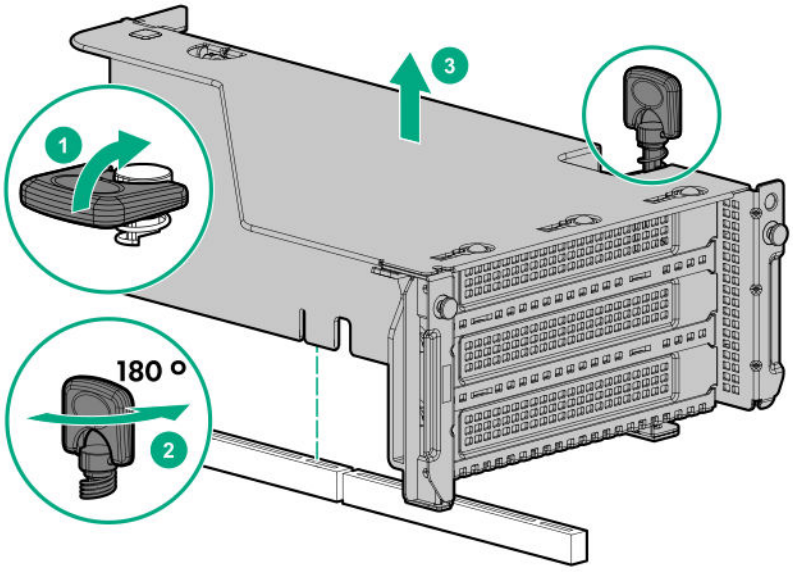

8. Locate slot 3, and then **remove the expansion slot blank**.
9. **Install the 12G SAS expander card**.

> **IMPORTANT:** The 12G SAS expander card requires a controller. The server supports embedded, type-a, and type-p Smart Array controllers. If using a type-p Smart Array controller, then install the controller in slot 1.

10. Using the labels on each cable, connect the cables to the SAS expander.
    For drive numbering, see "**Drive bay numbering: SAS expander**".
11. **Install the riser cage**.
12. **Connect cables from the 12G SAS expander to the controller**.

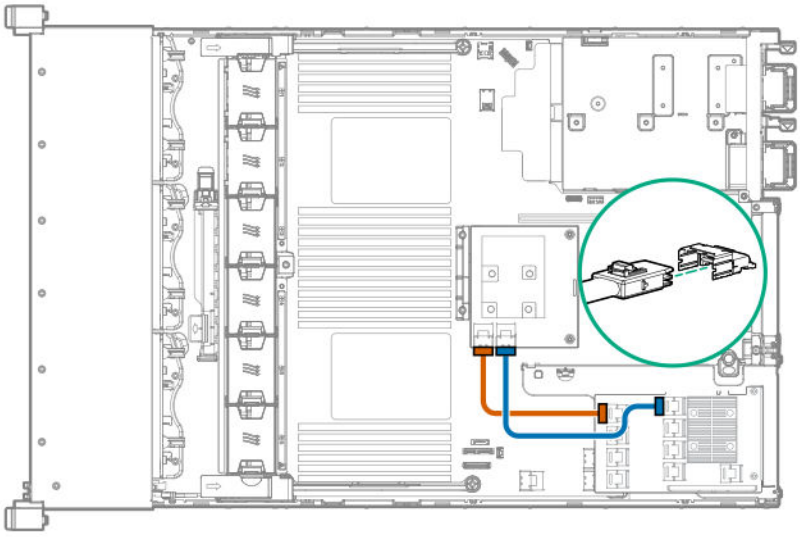

13. **Connect cables from the 12G SAS expander to the drive backplanes**.
    A standard configuration is shown. For additional cabling diagrams, see "**Cabling**".

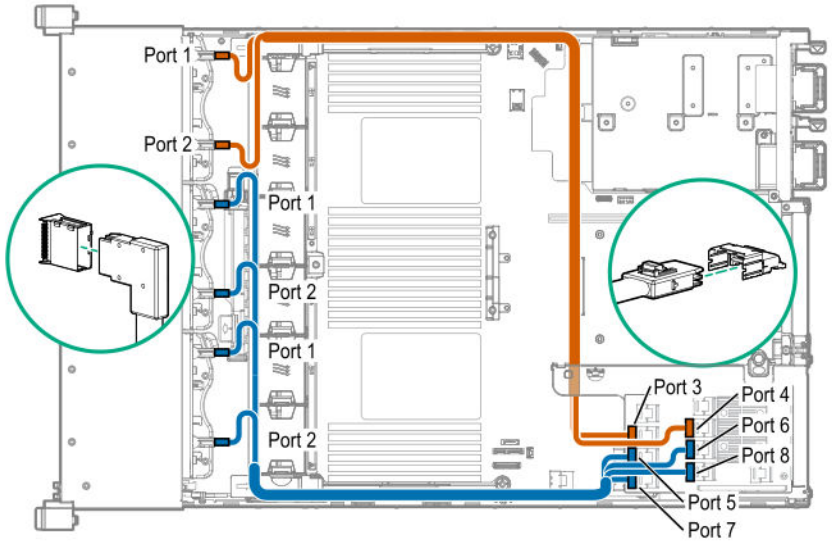

14. **Install the fan cage**.
15. **Install the air baffle**.
16. **Install the access panel**.
17. **Install the server into the rack**.
18. Connect each power cord to the server.
19. Connect each power cord to the power source.
20. **Power up the server**.

The installation is complete.

Accelerator options

This server supports various accelerator options to meet your computational and graphics workload requirements. For a list of supported accelerator models, see the server QuickSpecs on the Hewlett Packard Enterprise website (**https://www.hpe.com/info/qs**).

- PCIe workload accelerators – These options are PCIe card-based, direct-attach solutions that use solid-state storage technology directly on the PCI bus to boost I/O performance and reduce latency to scale in line with your processing requirements.
- Computation and graphics accelerators – These options deliver accelerated compute performance for a range of deep learning, high-performance computing (HPC), and graphics-intensive applications.

Installing an accelerator or GPU

This server supports up to three double width or five single width accelerators. The accelerator/GPU can be installed into the primary, secondary, or tertiary position. This procedure shows an installation in the secondary position.

WARNING: To reduce the risk of personal injury, electric shock, or damage to the equipment, remove the power cord to remove power from the server. The front panel Power On/Standby button does not completely shut off system power. Portions of the power supply and some internal circuitry remain active until AC power is removed.

CAUTION: To prevent improper cooling and thermal damage, do not operate the server unless all PCI slots have either an expansion slot cover or an expansion board installed.

Prerequisites

Before you perform this procedure, make sure that you have the following items available:

- The components included with the hardware option kit
- T-30 Torx screwdriver
- T-10 Torx screwdriver
- If the total maximum power requirement of all installed accelerators/GPUs is higher than 25 W, the high-performance fans and heatsinks are required.

Procedure

1. **Power down the server**.
2. Remove all power:
   a. Disconnect each power cord from the power source.
   b. Disconnect each power cord from the server.
3. Do one of the following:
   - **Extend the server from the rack**.
   - **Remove the server from the rack**.
4. **Remove the access panel**.
5. **Remove the air baffle**.
6. If you are installing a full-length accelerator, install the corresponding retention clip:
   a. Remove the air diverters from the air baffle.

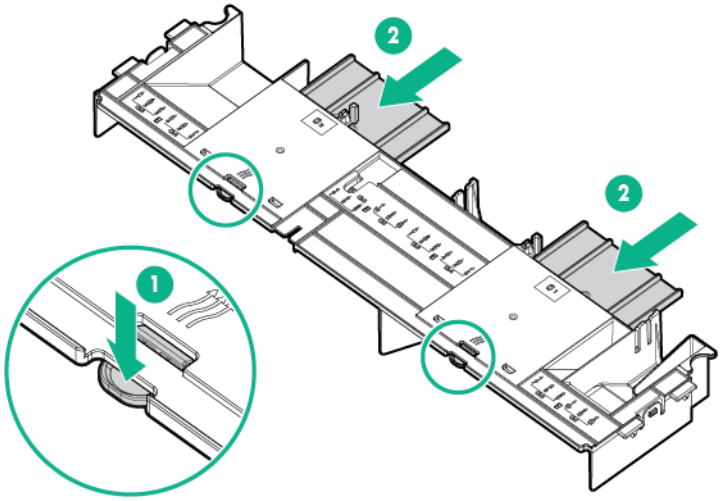

b. Install the appropriate retention clip onto the air baffle.

Install the clip that supports your configuration. Primary, secondary, and tertiary positions are shown.

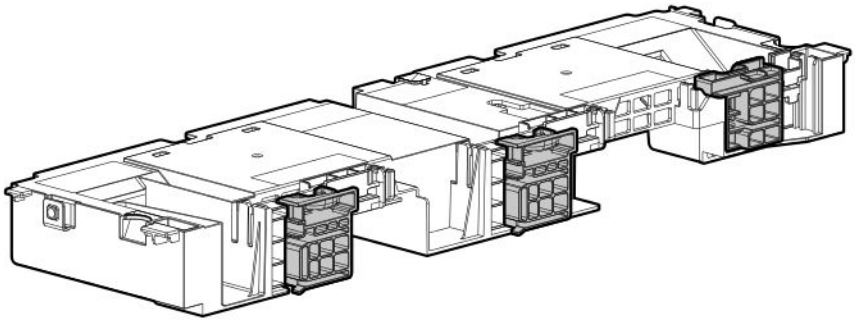

7. If the total maximum power requirement of all installed accelerators is higher than 25 W, install the high-performance fans and heatsinks to maintain proper system cooling:

a. **Install high-performance fans**.

b. **Install high-performance heatsinks**.

8. **Install the air baffle**.

9. Remove the PCI riser blank.

The secondary PCI riser blank is shown.

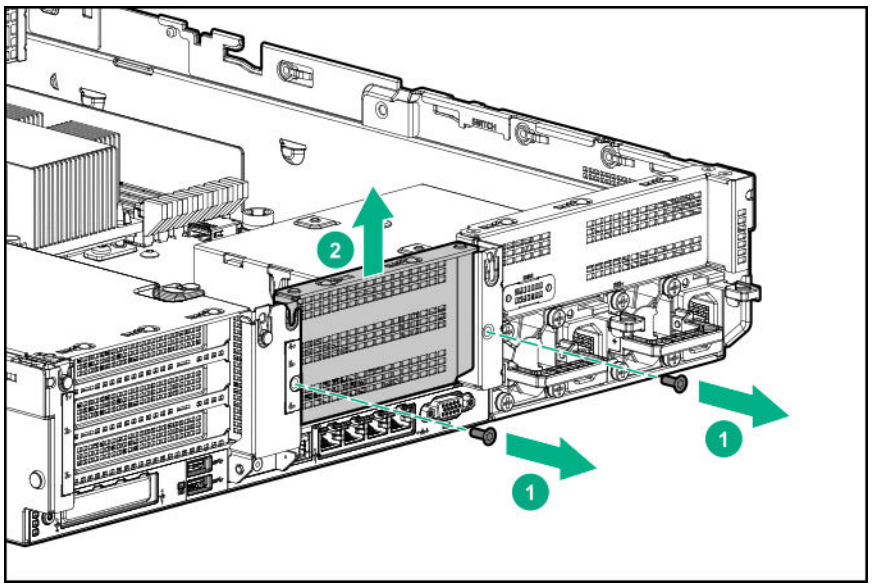

To install an accelerator in the primary riser cage, see "**Removing a riser cage**".

To install an accelerator in the tertiary riser cage, see "**Installing a tertiary riser cage**".

10. Remove the blank.

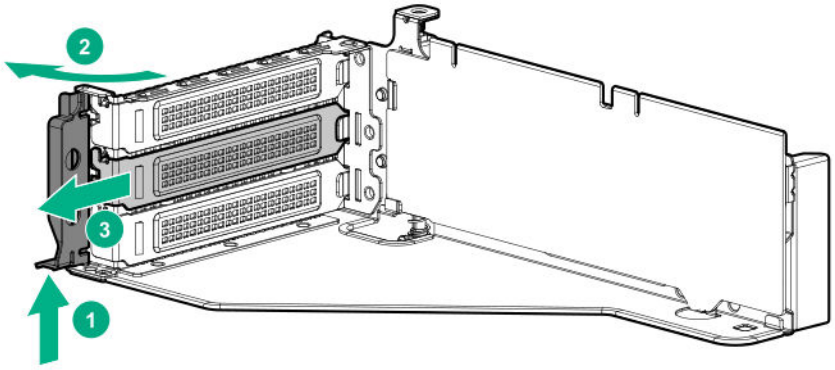

11. Install the accelerator into the riser.

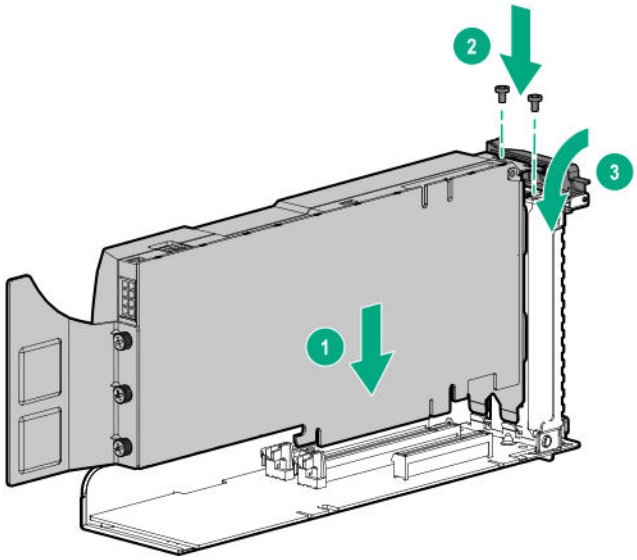

12. If you are installing an accelerator that requires an auxiliary power cable, connect the power cable from the accelerator to the riser.
13. If you are installing a full-length accelerator, slide the retention clip to the unlocked position.

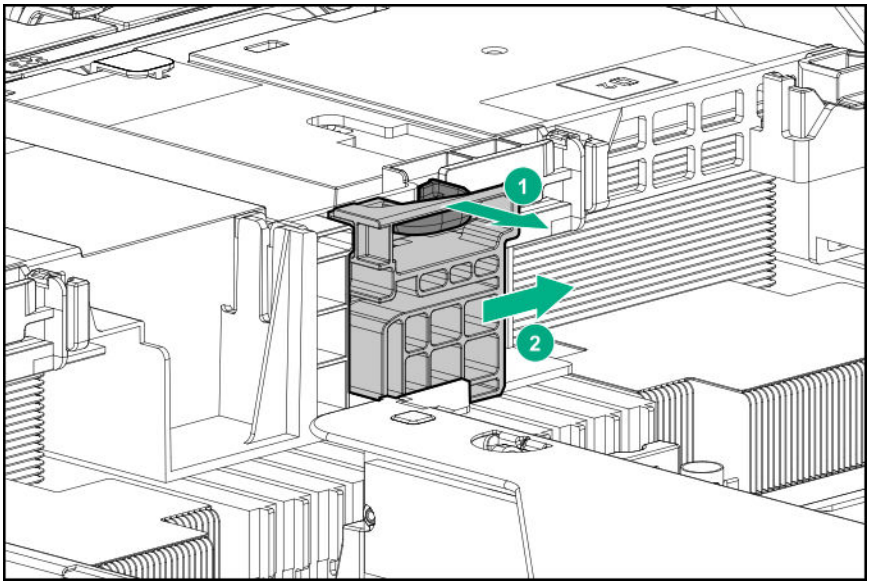

14. Install the riser cage.

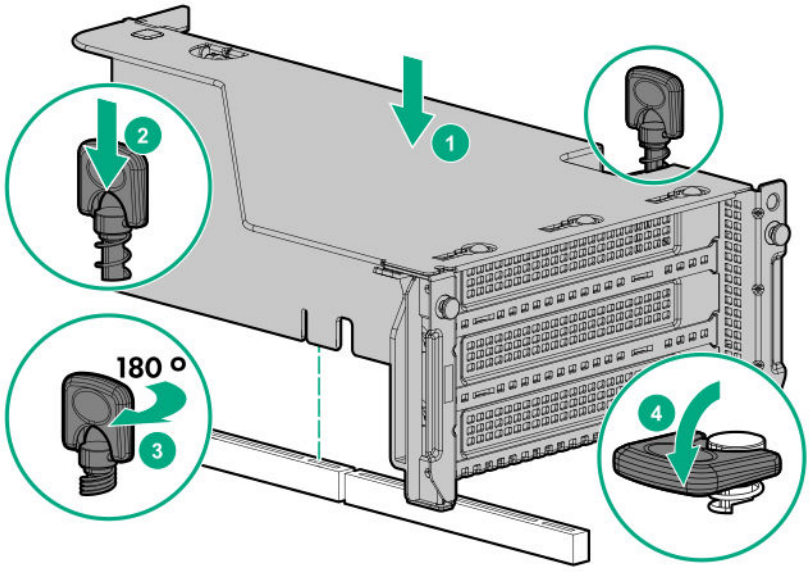

15. If you are installing a full-length accelerator, slide the retention clip to the locked position.

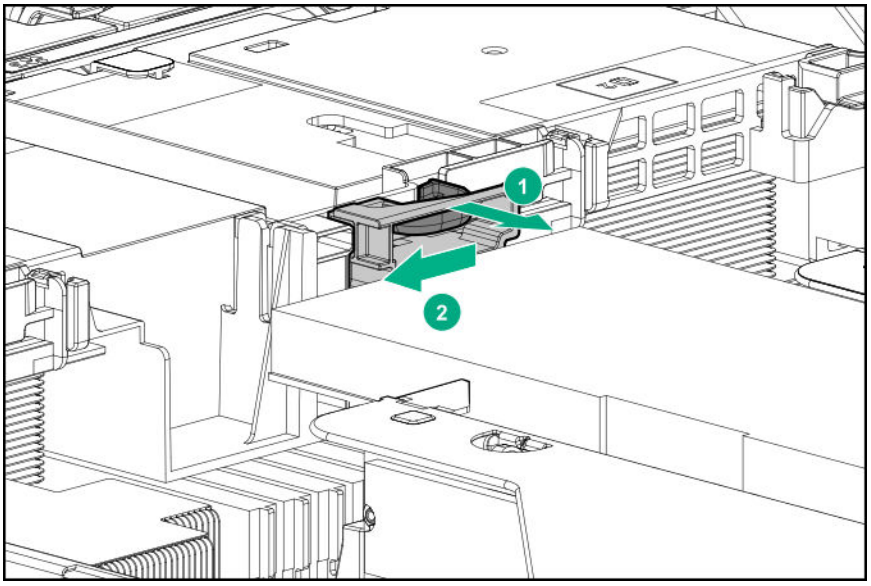

The installation is complete.

Installing the Pensando DSP DSC-25 2p SFP28 card with the iLO Sideband ALOM Module

The type of server determines the supported slot locations in which to install the DSP cards. For specific slot locations for installing the DSP cards, see the product Quick Specs on the **Hewlett Packard Enterprise** website.

For more information about the HPE for Pensando Distributed Services Platform (DSP) cards, see the Hewlett Packard Enterprise website (**https://www.hpe.com/support/Pensando-DSP-Installation**).

WARNING: To reduce the risk of personal injury from hot surfaces, allow the drives and the internal system components to cool before touching them.

CAUTION: Electrostatic discharge (ESD) can damage electronic components. Be sure that you are properly grounded (earthed) before beginning any installation procedure.

CAUTION: To prevent improper cooling and thermal damage, do not operate the server unless all PCIe slots have either an expansion slot cover or an expansion board installed.

The SFP28 card must be installed in the PCIe slot closest to the ALOM slot.

Procedure

1. **Power down the server**.
2. Remove all power:
   a. Disconnect each power cord from the power source.
   b. Disconnect each power cord from the server.
3. Do one of the following:
   - **Extend the server from the rack**.
   - **Remove the server from the rack**.
4. **Remove the access panel**.
5. Remove the PCIe riser cage to access the slot on the system board in which to install the ALOM module.

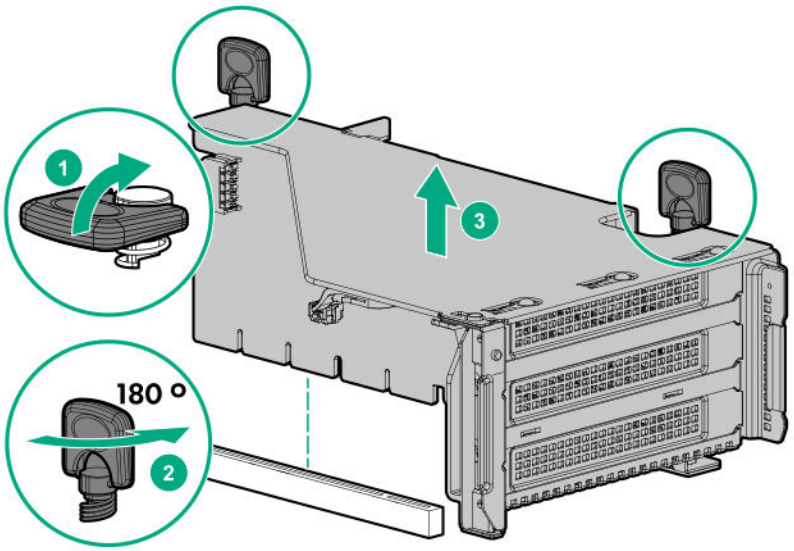

NOTE: Image may differ from actual product.

6. Install the Pensando DSP iLO Sideband ALOM Module into the FlexibleLOM adapter connector on the system board.

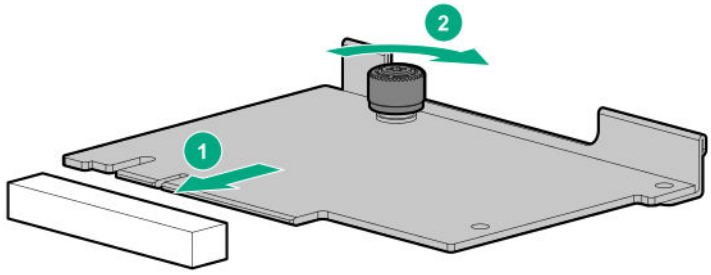

NOTE: Image may differ from actual product.

7. Remove the shipping cap from the auxiliary cable.
8. Connect the auxiliary cable to the iLO Sideband ALOM Module:
   a. Align the connector keying posts to the ALOM module.
   b. Secure the auxiliary cable to the ALOM module with a Phillips screwdriver.

CAUTION: Do not over torque the screw.

NOTE: Be sure not to twist the cable.

9. Remove the PCIe blank from the riser cage.

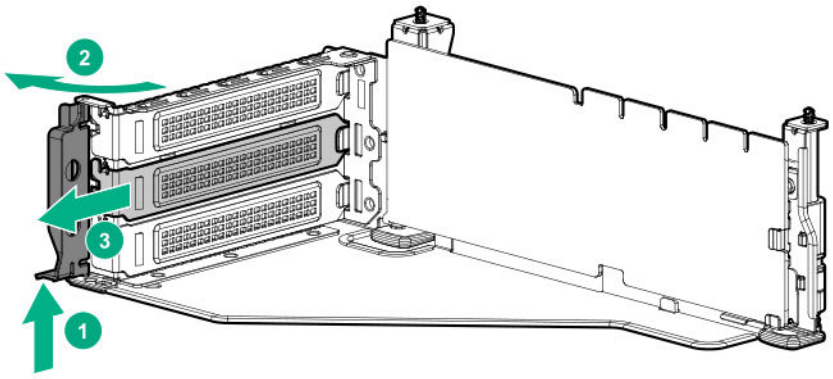

NOTE: Image may differ from actual product.

10. Install the SFP28 card into the slot:

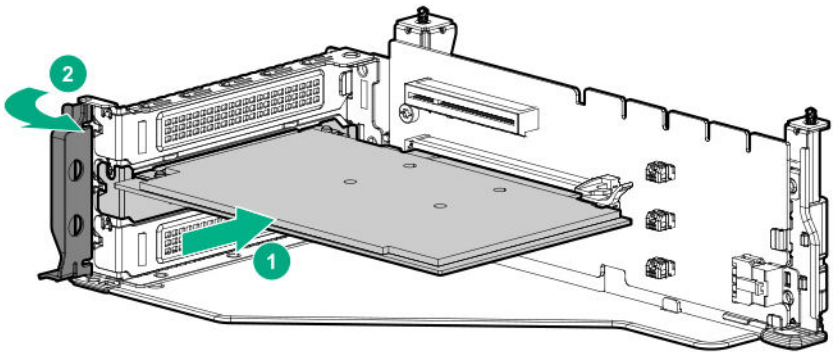

NOTE: Image may differ from actual product.

NOTE: Be sure that you install the SFP28 card into a slot that allows the cable to make connection to the ALOM module.

11. Install the PCIe riser cage into the server.

CAUTION: Do not twist the cable service loop during installation.

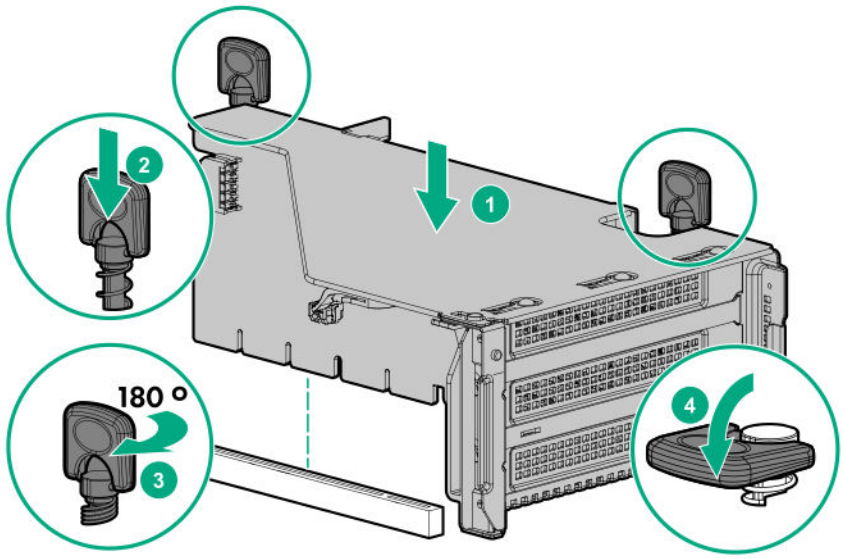

NOTE: Image may differ from actual product.

12. Remove the shipping cap from the auxiliary cable.

13. Connect the auxiliary cable to the SFP28 card:

a. Align the connector keying posts to the SFP28 card.

b. Secure the auxiliary cable to the SFP28 card using a Phillips screwdriver.

NOTE: The PCIe riser cage is not shown in this illustration for clarity purposes.

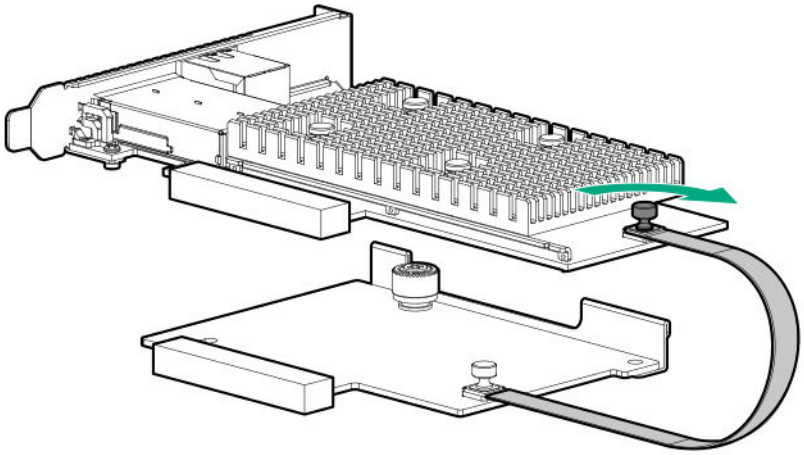

NOTE: Image may differ from actual product.

14. **Install the access panel**.
15. Slide the server into the rack.
16. Connect each power cord to the server.
17. Connect each power cord to the power source.
18. **Power up the server**.

The installation is complete.

Installing a FlexibleLOM adapter

Prerequisites

- The components included with the hardware option kit
- A T-10 Torx screwdriver might be needed to unlock the access panel.

Procedure

1. **Power down the server**.
2. Do one of the following:
   - Disconnect each power cord from the power source.
   - Disconnect each power cord from the server.
3. Do one of the following:
   - **Extend the server from the rack**.
   - **Remove the server from the rack**.
4. **Remove the access panel**.

5. **Remove the primary riser cage**.
6. Remove the FlexibleLOM blank.

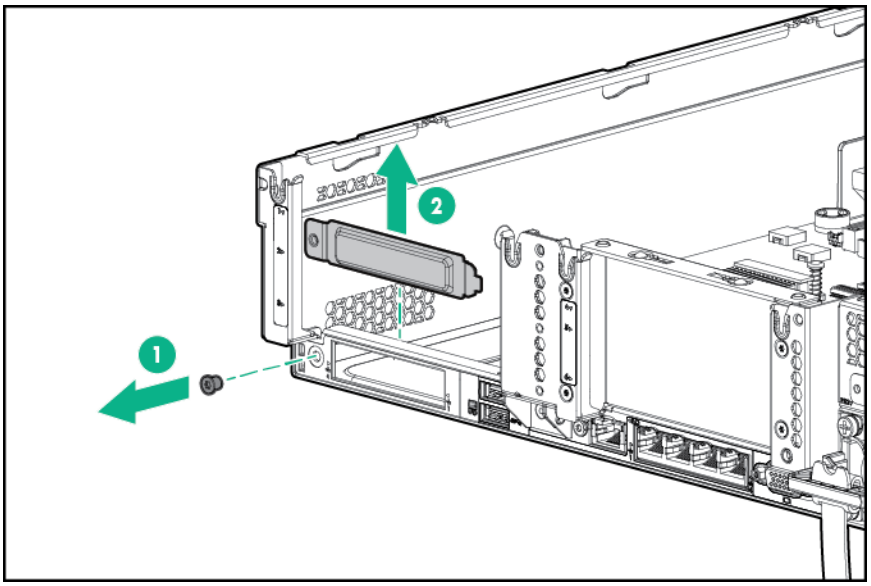

7. Install the FlexibleLOM adapter.

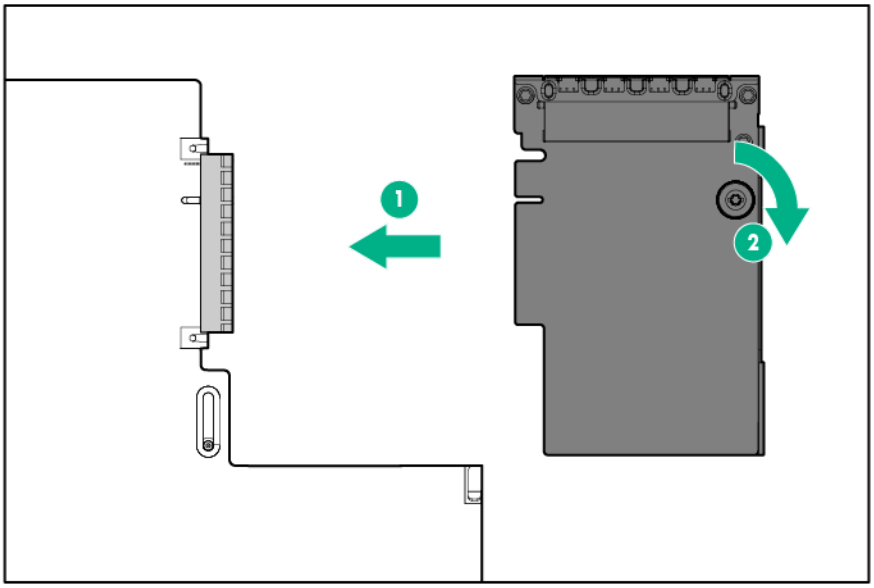

8. Install the riser cage.
9. **Install the access panel**.
10. **Install the server into the rack**.
11. Connect the LAN segment cables.
12. Connect each power cord to the server.

13. Connect each power cord to the power source.
14. **Power up the server**.

The installation is complete.

Installing the Systems Insight Display

Prerequisites

Before you perform this procedure, make sure that you have the following items available:

- The components included with the hardware option kit
- T-10 Torx screwdriver

Procedure

1. **Power down the server**.
2. Remove all power:
   a. Disconnect each power cord from the power source.
   b. Disconnect each power cord from the server.
3. Do one of the following:
   - **Extend the server from the rack**.
   - **Remove the server from the rack**.
4. **Remove the access panel**.
5. Do one of the following:
   - **Remove the air baffle**.
   - **If installed, remove the 4LFF midplane drive cage**.
6. **Remove the fan cage**.
7. Disconnect the power switch module cable from the power switch/SID module connector.
   The SID module cable will be connected to this same connector.
8. Remove the power switch module. Retain the T-10 screw for later use.

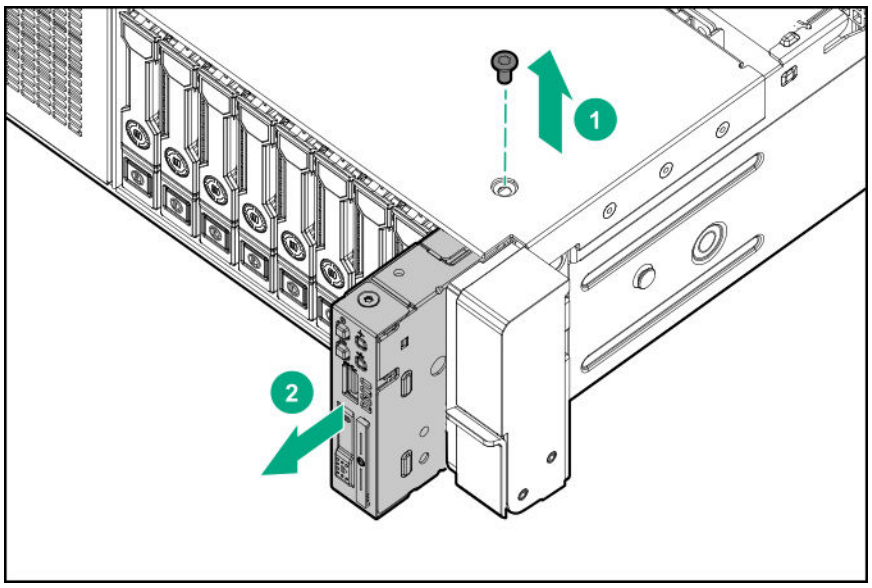

CAUTION: When routing cables, make sure that the cables are not in a position where they can be pinched or crimped.

9. Route the SID cable through the opening in the front of the server, and then install the SID module. Secure the module using the T-10 screw removed in step 8.

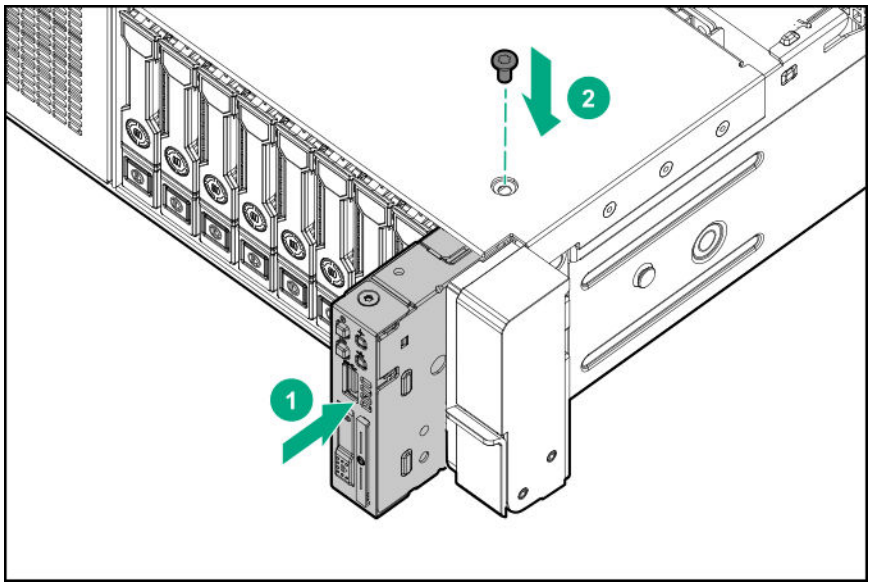

10. Connect the SID module cable to the power switch/SID module connector.
11. **Install the fan cage**.
12. Do one of the following:
    - **Install the air baffle**.
    - Perform steps 9–13 of "**Installing a midplane 4LFF SAS/SATA drive cage**".
13. **Install the access panel**.
14. Slide the server into the rack.

15. Connect each power cord to the server.
16. Connect each power cord to the power source.
17. **Power up the server**.

The installation is complete.

Installing the chassis intrusion detection switch

Prerequisites

Before you perform this procedure, make sure that you have the following items available:

The components included with the hardware option kit

Procedure

1. **Power down the server**.
2. Remove all power:
   a. Disconnect each power cord from the power source.
   b. Disconnect each power cord from the server.
3. Do one of the following:
   - **Extend the server from the rack**.
   - **Remove the server from the rack**.
4. **Remove the access panel**.
5. Install the chassis intrusion detection switch.

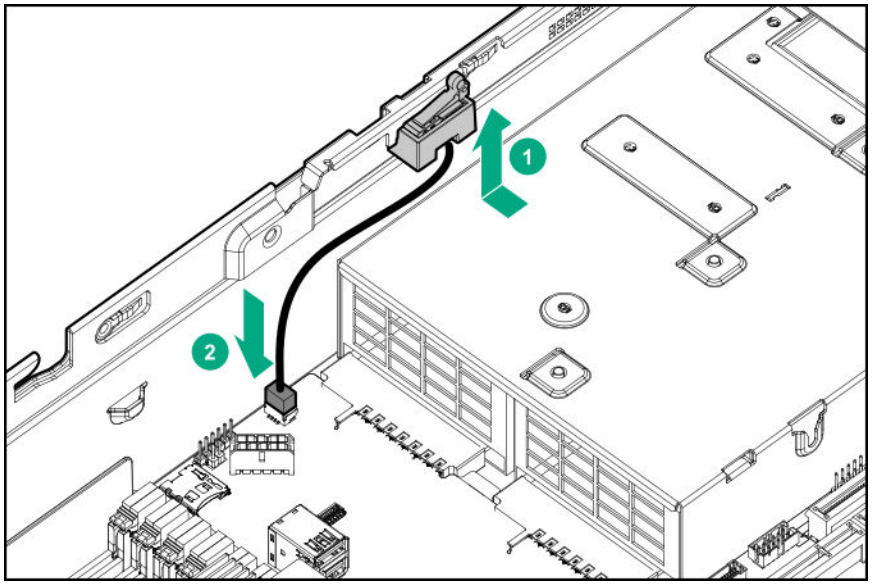

6. **Install the access panel**.

7. **Install the server into the rack**.
8. Connect each power cord to the server.
9. Connect each power cord to the power source.
10. **Power up the server**.

The installation is complete.

Installing a rear serial port interface

If a tertiary riser cage is installed, you can install the serial port into slot 6.

Prerequisites

Before you perform this procedure, make sure that you have the following items available:

The components included with the hardware option kit

Procedure

1. **Power down the server**.
2. Do one of the following:
   - Disconnect each power cord from the power source.
   - Disconnect each power cord from the server.
3. Do one of the following:
   - **Extend the server from the rack**.
   - **Remove the server from the rack**.
4. **Remove the access panel**.
5. If a tertiary riser cage is not installed, perform the following steps:
   a. Remove the serial port blank.

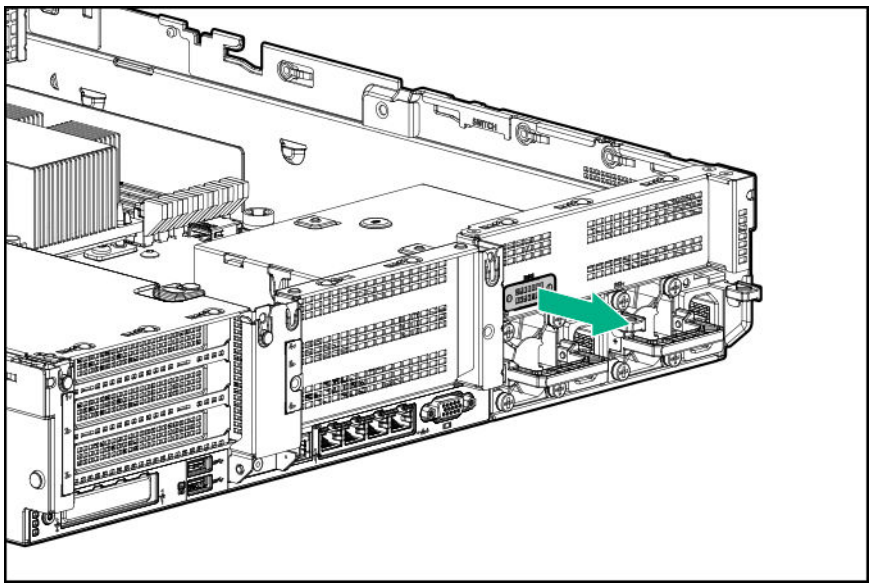

b. Insert the serial cable through the blank port and connect it to the system board.

c. Insert the serial port connector and fasten it to slot 6.

d. Route the cable around the riser cage screws.

e. Remove the double-sided backing and secure the cable to the side of the power supply cage.

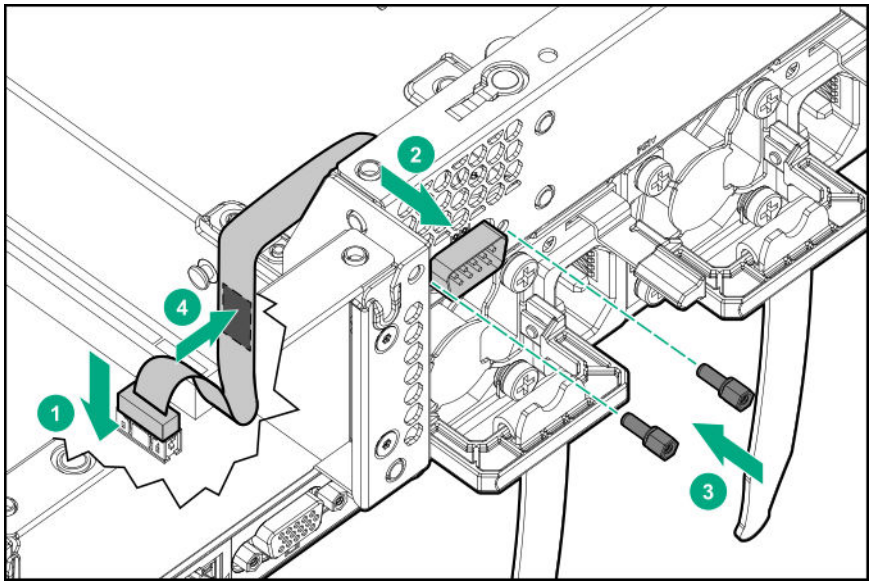

6. If a tertiary riser cage is installed, perform the following steps:

a. Remove the riser and the blank.

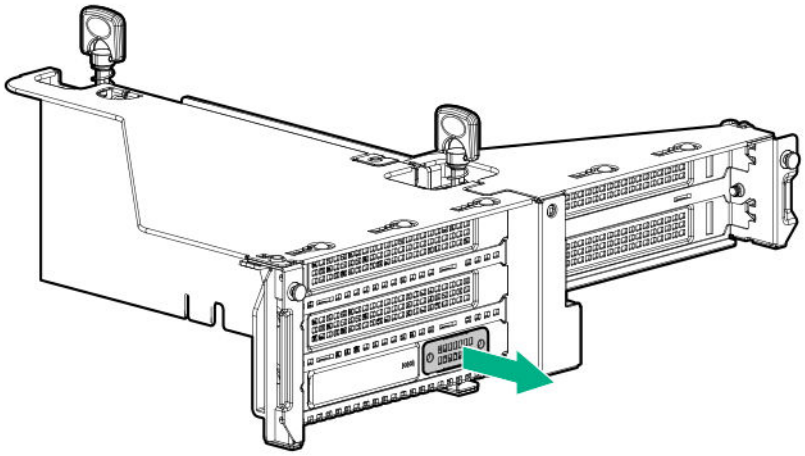

b. Install the serial port.

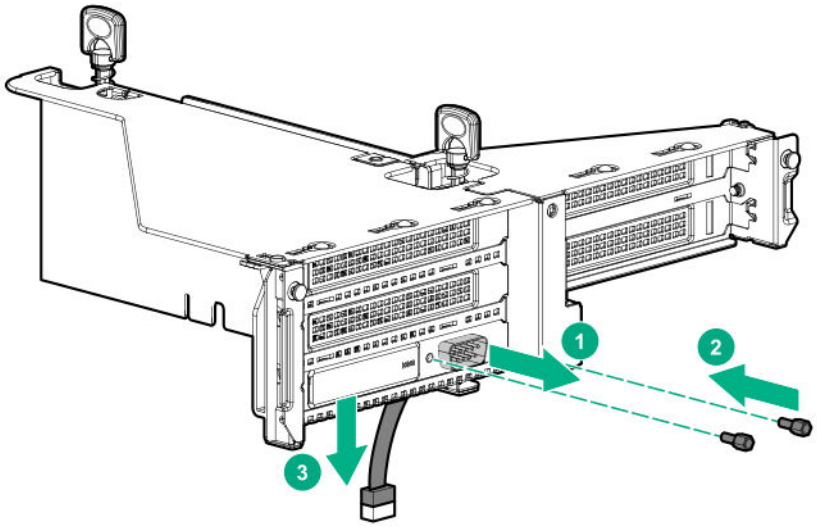

7. **Install the access panel**.
8. Install the server in the rack.
9. Connect each power cord to the server.
10. Connect each power cord to the power source.
11. **Power up the server**.

The installation is complete.

HPE Trusted Platform Module 2.0 Gen10 option

Overview

Use these instructions to install and enable an HPE TPM 2.0 Gen10 Kit in a supported server. This option is not supported on a Gen9 and earlier server.

This procedure includes three sections:

1. Installing the Trusted Platform Module board.
2. Enabling the Trusted Platform Module.
3. Retaining the recovery key/password.

HPE TPM 2.0 installation is supported with specific operating system support such as Microsoft Windows Server 2012 R2 and later. For more information about operating system support, see the product QuickSpecs on the Hewlett Packard Enterprise website (**https://www.hpe.com/info/qs**). For more information about Microsoft Windows BitLocker Drive Encryption feature, see the Microsoft website (**https://www.microsoft.com**).

CAUTION: If the TPM is removed from the original server and powered up on a different server, data stored in the TPM including keys will be erased.

IMPORTANT: In UEFI Boot Mode, the HPE TPM 2.0 Gen10 Kit can be configured to operate as TPM 2.0 (default) or TPM 1.2 on a supported server. In Legacy Boot Mode, the configuration can be changed between TPM 1.2 and TPM 2.0, but only TPM 1.2 operation is supported.

HPE Trusted Platform Module 2.0 guidelines

CAUTION: Always observe the guidelines in this document. Failure to follow these guidelines can cause hardware damage or halt data access.

Hewlett Packard Enterprise SPECIAL REMINDER: Before enabling TPM functionality on this system, you must ensure that your intended use of TPM complies with relevant local laws, regulations and policies, and approvals or licenses must be obtained if applicable.

For any compliance issues arising from your operation/usage of TPM which violates the above mentioned requirement, you shall bear all the liabilities wholly and solely. Hewlett Packard Enterprise will not be responsible for any related liabilities.

慧与特别提醒：在您启用系统中的TPM功能前，请务必确认您对TPM的使用遵守当地相关法律、法规及政策，并已事先获得所需的一切批准及许可（如适用），因您未获得相应的操作/使用许可而导致的违规问题，皆由您自行承担全部责任，与慧与无涉。

When installing or replacing a TPM, observe the following guidelines:

- Do not remove an installed TPM. Once installed, the TPM becomes a permanent part of the system board.
- When installing or replacing hardware, Hewlett Packard Enterprise service providers cannot enable the TPM or the encryption technology. For security reasons, only the customer can enable these features.
- When returning a system board for service replacement, do not remove the TPM from the system board. When requested, Hewlett Packard Enterprise Service provides a TPM with the spare system board.
- Any attempt to remove the cover of an installed TPM from the system board can damage the TPM cover, the TPM, and the system board.

- If the TPM is removed from the original server and powered up on a different server, all data stored in the TPM including keys will be erased.
- When using BitLocker, always retain the recovery key/password. The recovery key/password is required to complete Recovery Mode after BitLocker detects a possible compromise of system integrity.
- Hewlett Packard Enterprise is not liable for blocked data access caused by improper TPM use. For operating instructions, see the TPM documentation or the encryption technology feature documentation provided by the operating system.

Installing and enabling the HPE TPM 2.0 Gen10 option

Installing the Trusted Platform Module board

Preparing the server for installation

Procedure

1. Observe the following warnings:

   WARNING: The front panel Power On/Standby button does not shut off system power. Portions of the power supply and some internal circuitry remain active until AC power is removed.

   To reduce the risk of personal injury, electric shock, or damage to the equipment, remove power from the server:

   - For rack and tower servers, remove the power cord.
   - For server blades and compute modules, remove the server blade or compute module from the enclosure.

   WARNING: To reduce the risk of personal injury from hot surfaces, allow the drives and the internal system components to cool before touching them.

2. Update the system ROM.

   Locate and download the latest ROM version from the **Hewlett Packard Enterprise Support Center website**. Follow the instructions on the website to update the system ROM.

3. Power down the server (**Power down the server**).
4. Remove all power:
   a. Disconnect each power cord from the power source.
   b. Disconnect each power cord from the server.
5. Do one of the following:
   - **Extend the server from the rack**.
   - **Remove the server from the rack**.
6. Place the server on a flat, level work surface.
7. **Remove the access panel**.
8. Do one of the following:

- **Remove the air baffle**.
- **If installed, remove the 4LFF midplane drive cage**.

9. If installed, **remove the tertiary riser cage**.
10. Proceed to **Installing the TPM board and cover**.

Installing the TPM board and cover

Procedure

1. Observe the following alerts:

> **CAUTION:** If the TPM is removed from the original server and powered up on a different server, data stored in the TPM including keys will be erased.

> **CAUTION:** The TPM is keyed to install only in the orientation shown. Any attempt to install the TPM in a different orientation might result in damage to the TPM or system board.

2. Align the TPM board with the key on the connector, and then install the TPM board. To seat the board, press the TPM board firmly into the connector. To locate the TPM connector on the system board, see the server label on the access panel.

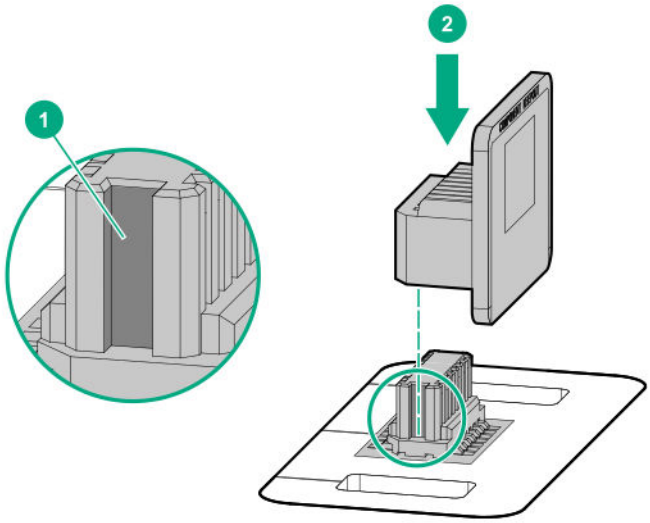

3. Install the TPM cover:
   a. Line up the tabs on the cover with the openings on either side of the TPM connector.
   b. To snap the cover into place, firmly press straight down on the middle of the cover.

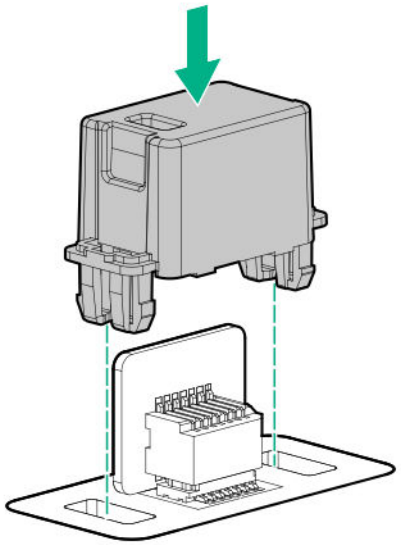

4. Proceed to **Preparing the server for operation**.

Preparing the server for operation

Procedure

1. Install any options or cables previously removed to access the TPM connector.
2. Do one of the following:
   - **Install the air baffle**.
   - Perform steps 9–13 of "**Installing a midplane 4LFF SAS/SATA drive cage**".
3. **Install the access panel**.
4. **Install the server into the rack**.
5. Connect each power cord to the server.
6. Connect each power cord to the power source.
7. **Power up the server**.

Enabling the Trusted Platform Module

When enabling the Trusted Platform module, observe the following guidelines:

- By default, the Trusted Platform Module is enabled as TPM 2.0 when the server is powered on after installing it.
- In UEFI Boot Mode, the Trusted Platform Module can be configured to operate as TPM 2.0 (default) or TPM 1.2.
- In Legacy Boot Mode, the Trusted Platform Module configuration can be changed between TPM 1.2 and TPM 2.0 (default), but only TPM 1.2 operation is supported.

Enabling the Trusted Platform Module as TPM 2.0

Procedure

1. During the server startup sequence, press the **F9** key to access **System Utilities**.
2. From the System Utilities screen, select **System Configuration** > **BIOS/Platform Configuration (RBSU)** > **Server Security** > **Trusted Platform Module options**.
3. Verify the following:
   - "Current TPM Type" is set to **TPM 2.0**.
   - "Current TPM State" is set to **Present and Enabled**.
   - "TPM Visibility" is set to **Visible**.
4. If changes were made in the previous step, press the **F10** key to save your selection.
5. If **F10** was pressed in the previous step, do one of the following:
   - If in graphical mode, click **Yes**.
   - If in text mode, press the **Y** key.
6. Press the **ESC** key to exit System Utilities.
7. If changes were made and saved, the server prompts for reboot request. Press the **Enter** key to confirm reboot.

   If the following actions were performed, the server reboots a second time without user input. During this reboot, the TPM setting becomes effective.
   - Changing from TPM 1.2 and TPM 2.0
   - Changing TPM bus from FIFO to CRB
   - Enabling or disabling TPM
   - Clearing the TPM
8. Enable TPM functionality in the OS, such as Microsoft Windows BitLocker or measured boot.

   For more information, see the **Microsoft website**.

Enabling the Trusted Platform Module as TPM 1.2

Procedure

1. During the server startup sequence, press the **F9** key to access **System Utilities**.
2. From the System Utilities screen select **System Configuration** > **BIOS/Platform Configuration (RBSU)** > **Server Security** > **Trusted Platform Module options**.
3. Change the "TPM Mode Switch Operation" to **TPM 1.2**.
4. Verify that "TPM Visibility" is set to **Visible**.
5. Press the **F10** key to save your selection.
6. When prompted to save the change in System Utilities, do one of the following:

- If in graphical mode, click **Yes**.
- If in text mode, press the **Y** key.

7. Press the **ESC** key to exit System Utilities.

   The server reboots a second time without user input. During this reboot, the TPM setting becomes effective.

8. Enable TPM functionality in the OS, such as Microsoft Windows BitLocker or measured boot.

   For more information, see the **Microsoft website**.

Retaining the BitLocker recovery key/password

The recovery key/password is generated during BitLocker setup, and can be saved and printed after BitLocker is enabled. When using BitLocker, always retain the recovery key/password. The recovery key/password is required to enter Recovery Mode after BitLocker detects a possible compromise of system integrity.

To help ensure maximum security, observe the following guidelines when retaining the recovery key/password:

- Always store the recovery key/password in multiple locations.
- Always store copies of the recovery key/password away from the server.
- Do not save the recovery key/password on the encrypted hard drive.

Cabling

HPE ProLiant Gen10 DL Servers Storage Cabling Guidelines

When installing cables, observe the following:

- All ports are labeled:
  - System board ports
  - Controller ports
  - 12G SAS Expander ports
- Most data cables have labels near each connector with destination port information.
- Some data cables are pre-bent. Do not unbend or manipulate the cables.
- Before connecting a cable to a port, lay the cable in place to verify the length of the cable.
- When routing cables from the front to the rear of the server, use the cable channels on either side of the chassis.

Cabling diagrams

Use the following tables to find cabling information and diagrams. For additional cabling configurations, see the Hewlett Packard Enterprise website (**https://www.hpe.com/info/CablingMatrixGen10**).

Table 3: SAS/SATA kits

Option kit	Cable part number	From	To	Power cable part number
Front 2 SFF SATA side by side (LFF)	**882066-001**[1]	Drive backplane	System board	869810-001[7]
Front 2 SFF SAS/SATA drive cage (SFF)	**869826-001**[2]	Drive backplane	• SAS expander • Controller	869810-001[7] 869825-001[7]
Front 2 SFF SAS/SATA 1U drive cage (LFF)	**869826-001**[2]	Drive backplane	• SAS expander • Controller	869810-001[7]
Front/rear 2 SFF 2Premium SAS (SFF + LFF)	**P00698-001**[1]	Drive backplane	System board	869810-001[7]
Front 4 LFF SAS/SATA drive cages	869827-001[2]	Drive backplane	• SAS expander • Controller	869825-001[7]

Table Continued

Option kit	Cable part number	From	To	Power cable part number
Front 8 SFF SAS/SATA drive cages	**776402-001**[5]	Drive backplane	• SAS expander • Controller	869825-001[7]
Mid 4 LFF SAS/SATA drive cage	**869824-001**[3]	Drive backplane	• SAS expander • Controller	**Data** 12G SAS Expander Kit (875094-001)
Mid 4 LFF SAS/SATA drive cage for system board	882068-001 **(cabling diagram)**	Drive backplane	System board	**Data** HPE DL385 Gen10 Mini-SAS 3POS cable kit (P00658-001)
Rear 2 SFF SAS/SATA riser drive cage	**869823-001**[4]	Drive backplane	• SAS expander • Controller	869806-001[7]
Rear 3 LFF SAS/SATA drive cage for system board	**882068-001**[1]	Drive backplane	System board	869806-001[7]
Rear 3 LFF SAS/SATA drive cage for SAS expander	**869823-001**[4]	Drive backplane	• SAS expander • Controller	869806-001[7]
HPE 12G SAS Expander Card	**869802-001**[6] **869803-001**[6]	SAS expander	Controller	—

To order spare cables, use the following kits and spare part numbers.

[1] HPE DL385 Gen10 Mini-SAS 3POS cable kit (P00658-001)

[2] Mini-SAS LFF kit (875090-001)

[3] 12G SAS expander kit (875094-001)

[4] Mini-SAS SFF kit (875089-001)

[5] SAS 8 SFF kit (784629-001)

[6] 12G SAS expander to controller kit (875093-001)

[7] Power cables kit (875096-001)

Table 4: NVMe bay/riser kits

Option kit	Cable part number	From	To	Power cable part number
Front 2 SFF NVMe side by side	**869812-001**[1]	Drive backplane	System board	869825-001[3]
Front 2 SFF Premium	**869812-001**[1]	Drive backplane	System board	869825-001[3]
Front 8 SFF SAS/SATA/NVMe Premium for SFF	776402-001 **NVMe cable included with NVMe riser**	Drive backplane	SATA to: • SAS expander • Controller • Tertiary riser	869825-001[3]
Front 8 SFF NVMe drive cage	**NVMe cable included with NVMe riser** [2]	Drive backplane	Primary riser	869825-001[3]
Bay 1 8 NVMe drive cage	**869812-001**[1]	Drive backplane	System board	869825-001[3]
Bay 1 8 Premium	**869812-001**[1]	Drive backplane	System board	869825-001[3]
Bay 2 8 Premium	**869812-001**[1]	Drive backplane	System board	869825-001[3]
HPE DL380 Gen10 4-Port Slim SAS Riser, Secondary PCIe	**869814-001**[1] **869813-001**[1]	PCIe riser	Backplane	—
HPE DL380 Gen10 2-Port Slim SAS Riser, Tertiary PCIe	**869812-001**[1]	PCIe riser	Backplane	—
HPE DL380 Gen10 4-Port Slim SAS Riser	**869811-001** **776402-001**	PCIe riser	Backplane	—
HPE DL380 Gen10 1-Port Slim SAS Riser	**869812-001**[1]	PCIe riser	Backplane	—

[1] NVMe Direct Attach kit (875092-001)

[2] NVMe SFF riser kit (875091-001)

[3] Power cables kit (875096-001)

Table 5: GPU power (not shown)

Option kit	Cable part number	From	To
HPE GPU 6px6p Y-Power Cable Kit	873193-001[1]	GPU	Riser
HPE GPU 8px6p Y-Power Cable Kit	869805-001[1]	GPU	Riser
HPE GPU 8p Keyed GPU Cable Kit	869820-001[1]	GPU	Riser
HPE GPU 8p Cable Kit	869821-001[1]	GPU	Riser
HPE GPU power adapter	869828-001[1]	GPU	System board

[1] GPU cables kit (875097-001)

Table 6: Data kits (not shown)

Option kit	Cable part number	From	To
Front USB/display port (SFF UMB)	869804-001[1]	Component	System board
External USB 2.0	869817-001[1]	Component	System board
Front USB port (SFF UMB)	869829-001[1]	Component	System board
Front display port (LFF)	869808-001[1]	Component	System board
Optical disc drive	756914-001[2]	Component	System board
Systems Insight Display	Included with component	Component	System board

[1] Data cables kit (875095-001)

[2] DVD cable kit (784623-001)

Cable routing: Front 2SFF SAS side by side for LFF

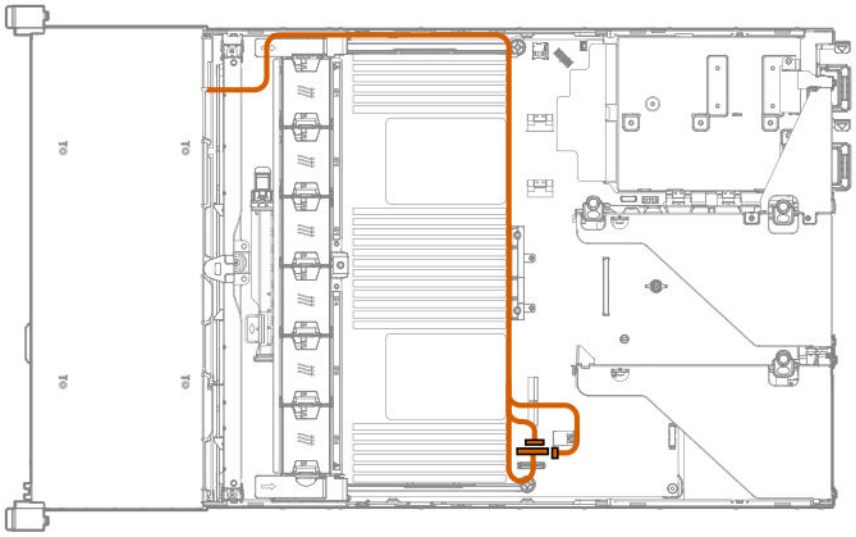

Cable routing: Front 2SFF drive option for SFF

SAS Expander

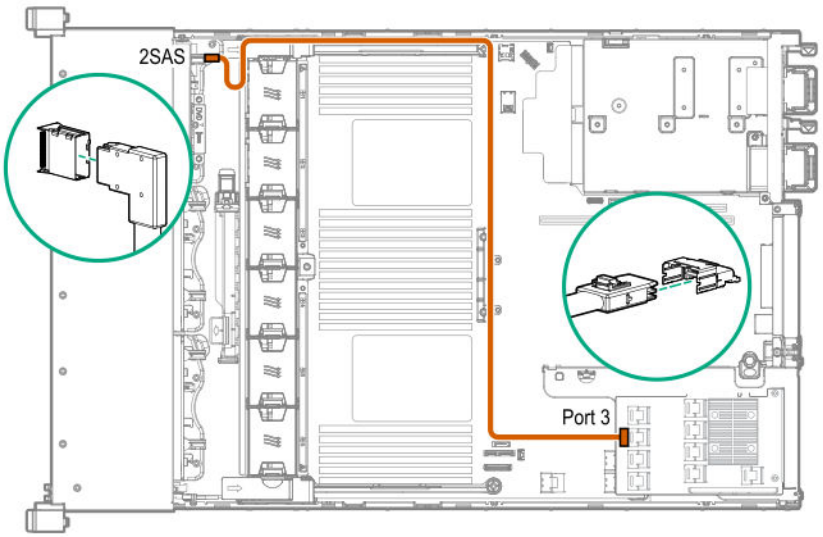

Controller option not shown.

Cable routing: Front 2SFF drive option for LFF

Controller

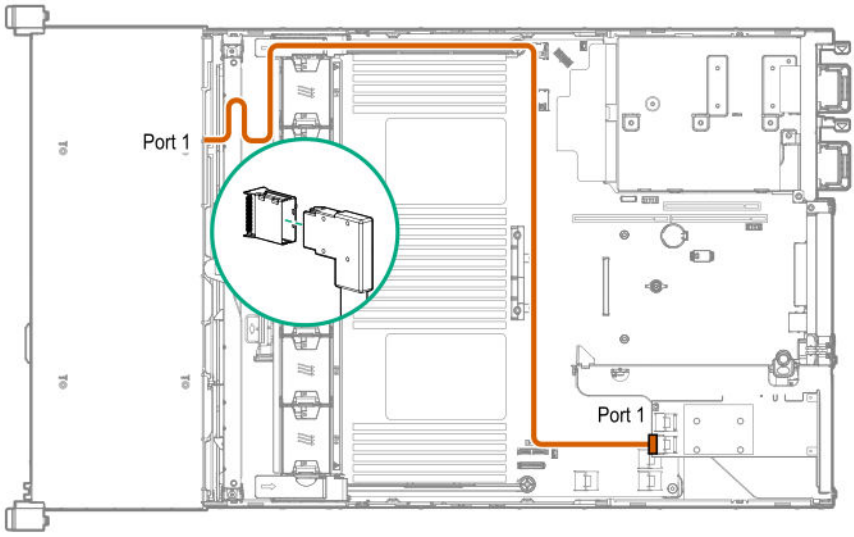

SAS Expander option not shown.

Cable routing: Front/rear 2Premium SAS (SFF + LFF)

Front 2SFF to system board

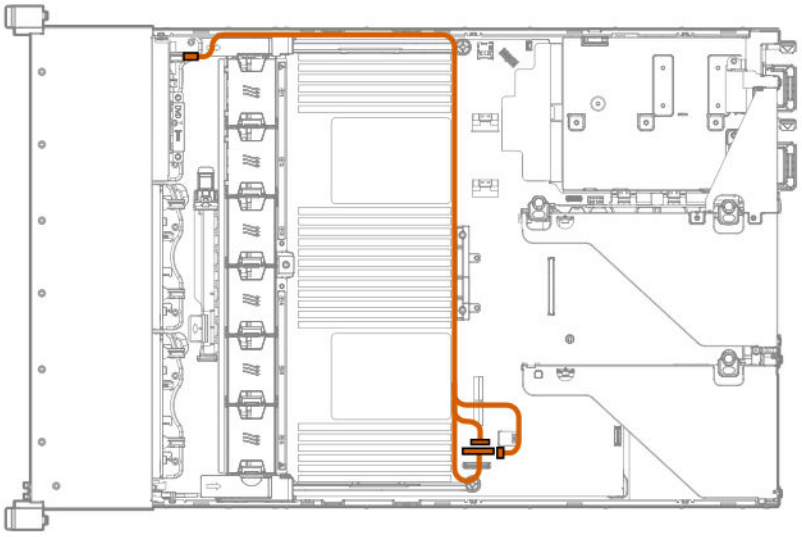

Rear 2SFF to system board

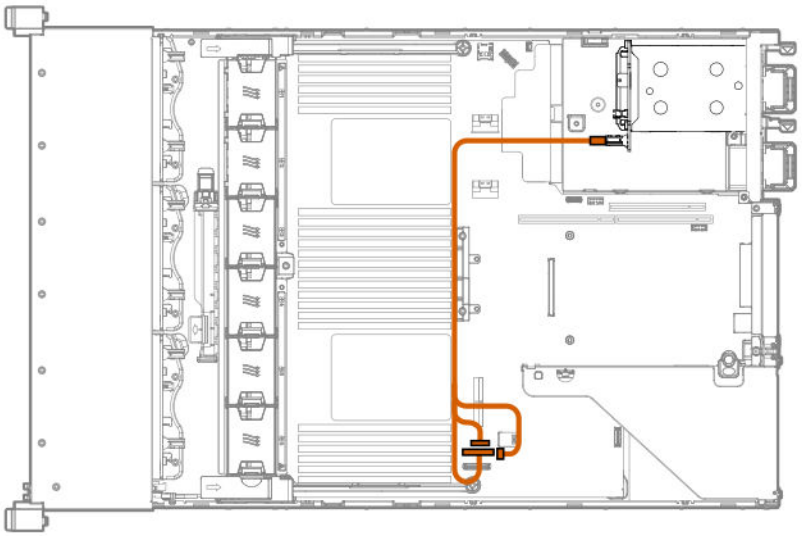

Cable routing: Front 8SFF SAS/SATA drive options

Box 1 to SAS Expander

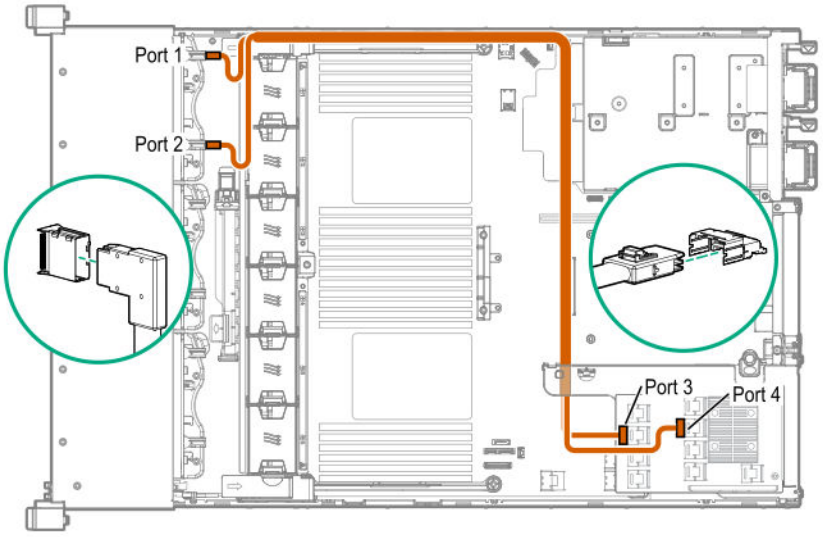

Boxes 2 and 3 to SAS Expander

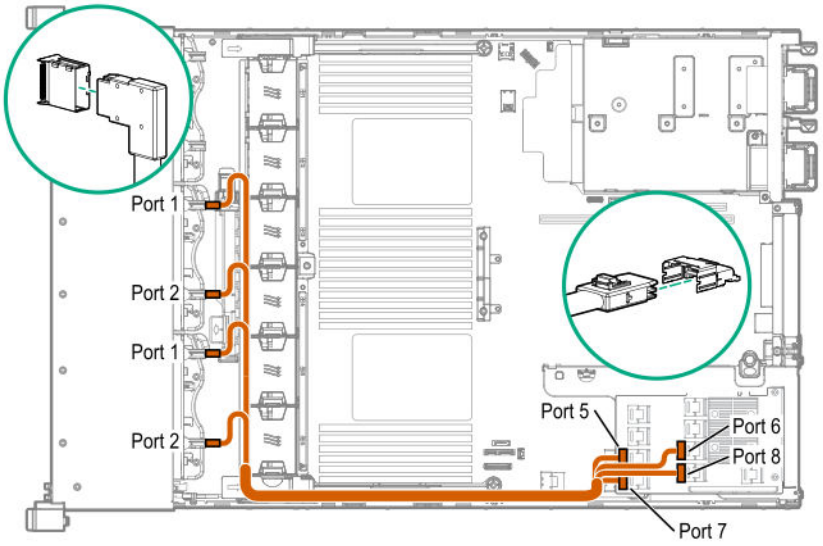

All boxes to SAS Expander

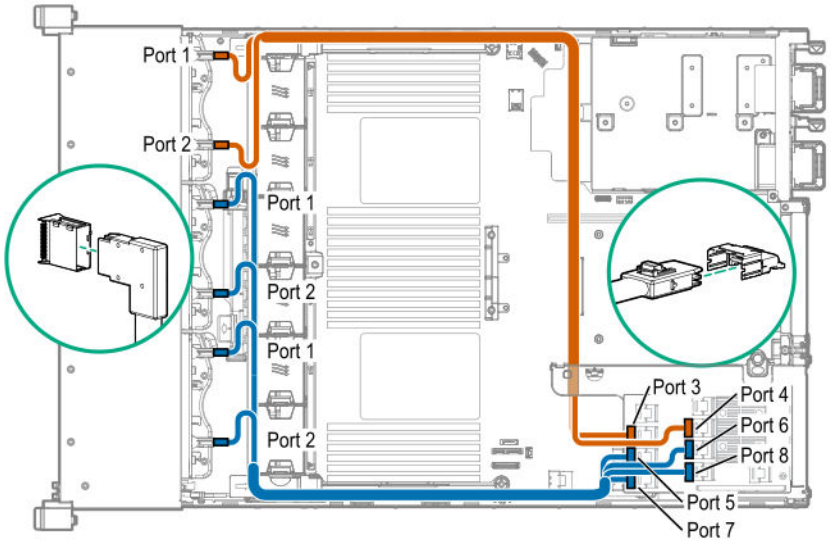

Cable routing: Midplane 4LFF SAS/SATA drive option

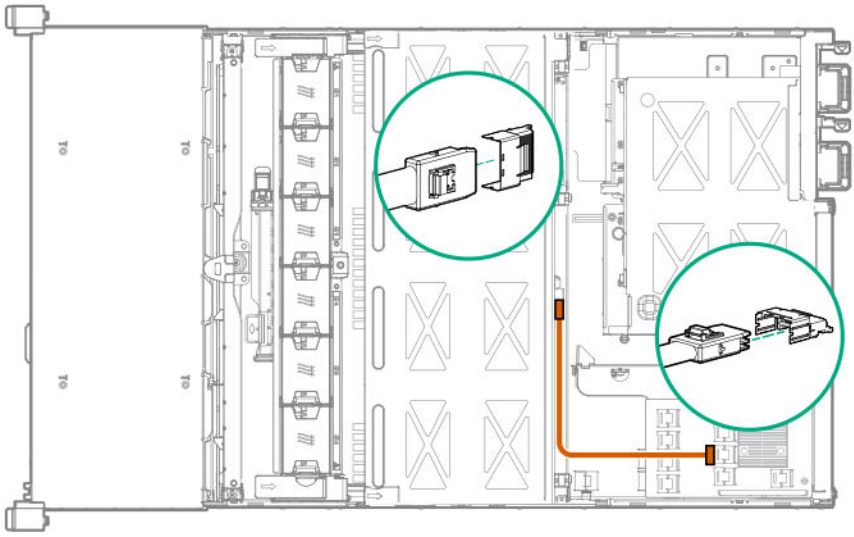

Cabling diagram: Mid 4LFF SAS/SATA drive cage for system board

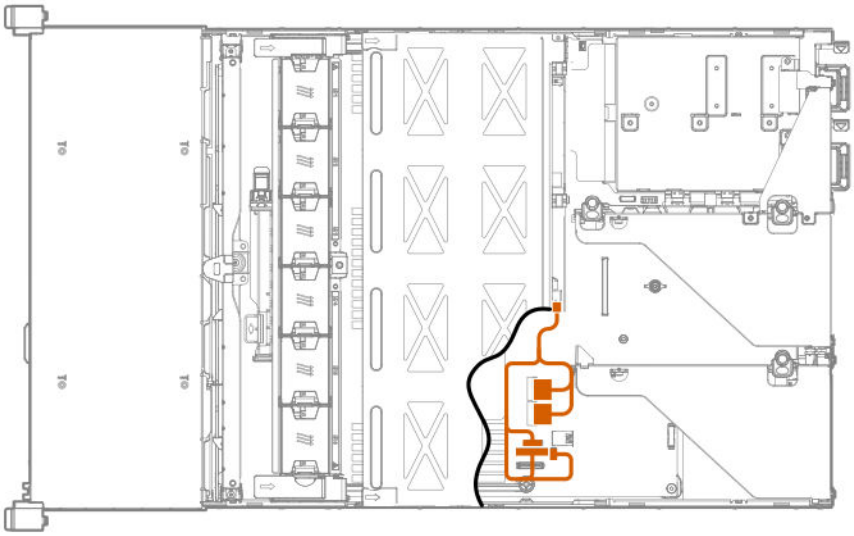

Cable routing: Rear 2SFF SAS/SATA riser drive options

Rear 2SFF drive option to a SAS Expander, both in the primary slot

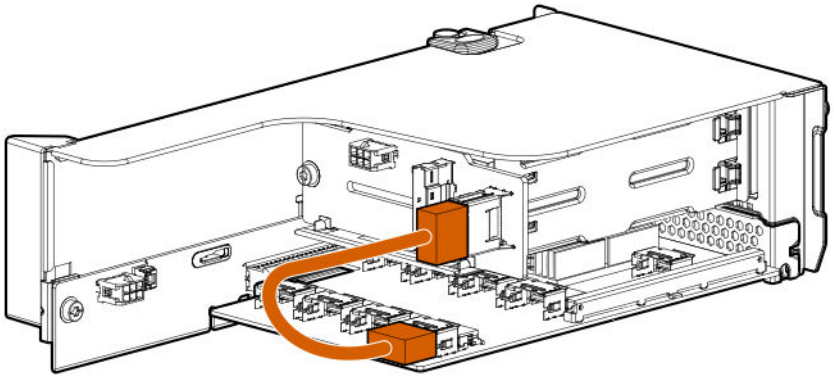

Rear 2SFF drive option in the secondary slot to a SAS Expander in the primary slot

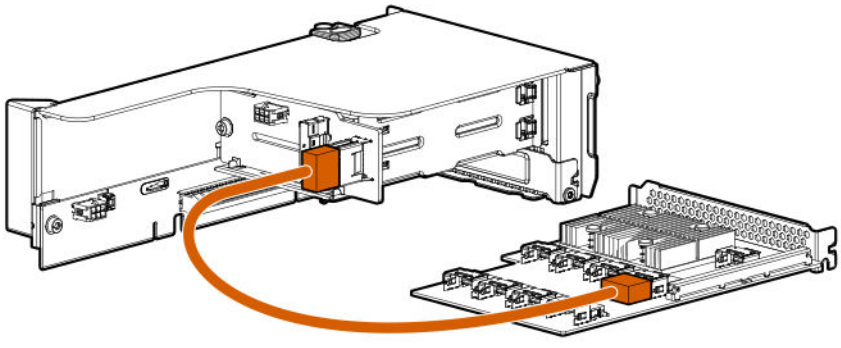

Rear 2SFF drive option above the power supplies to a controller

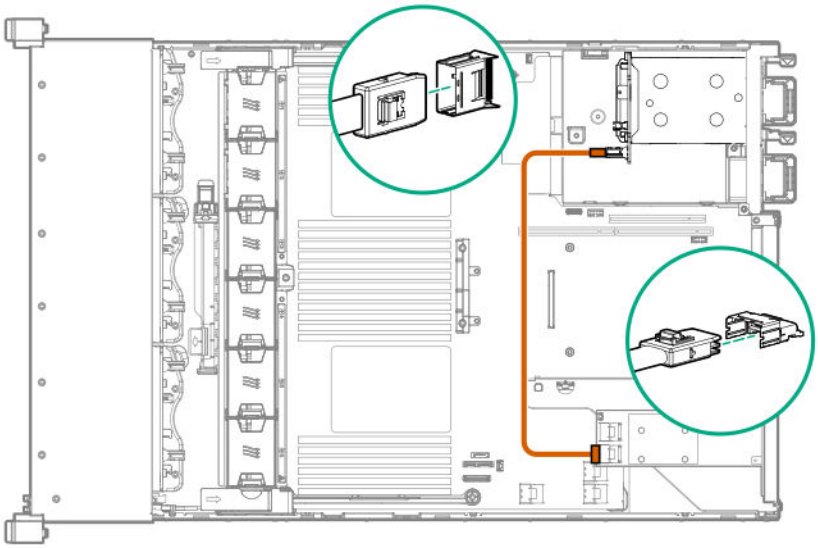

Cable routing: Rear 3LFF SAS/SATA drive option for system board

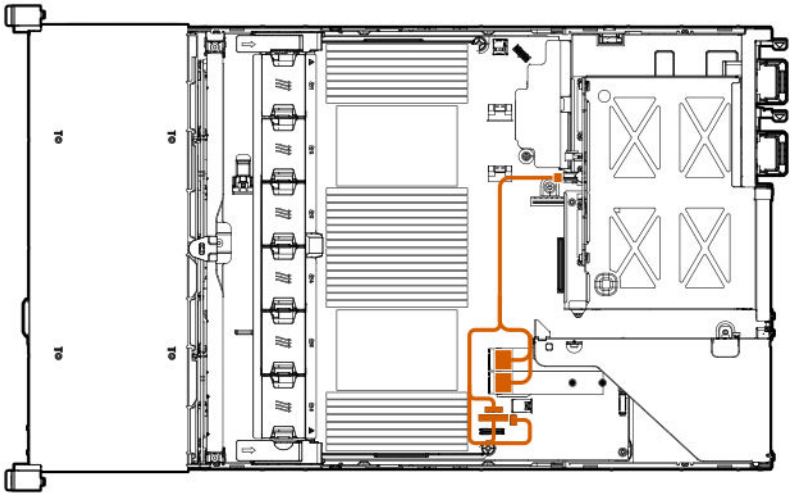

Cable routing: Rear 3LFF SAS/SATA drive option for SAS Expander

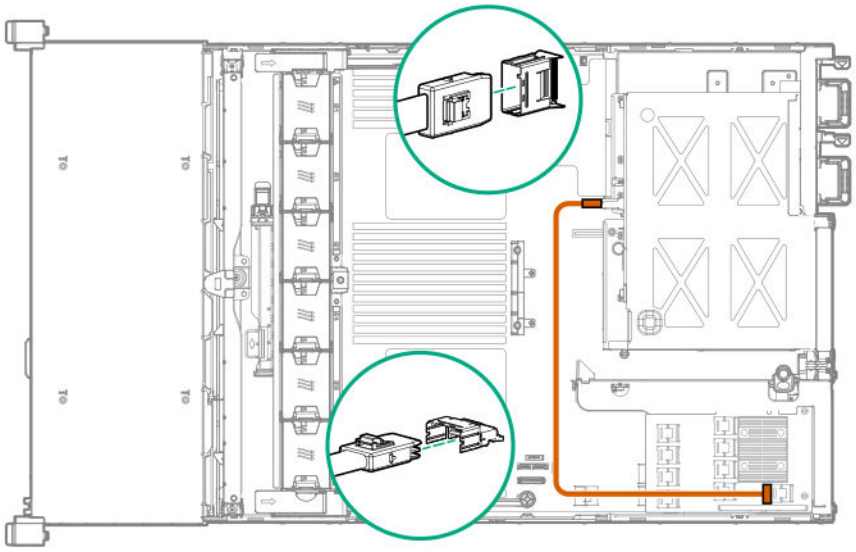

Controller option not shown.

Cable routing: HPE 12G SAS Expander

Observe the following:

- Port 1 always connects to port 1 of the controller.
- Port 2 always connects to port 2 of the controller.

SAS expander to a type -a controller

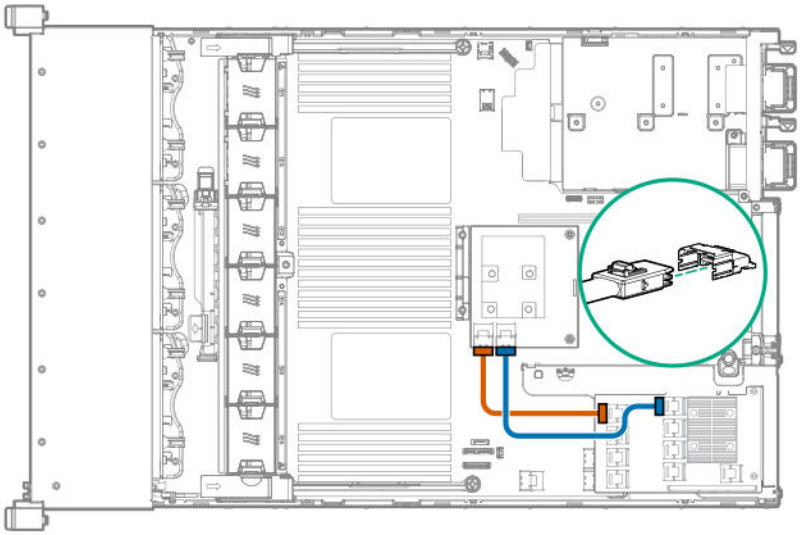

SAS expander to a type -p controller

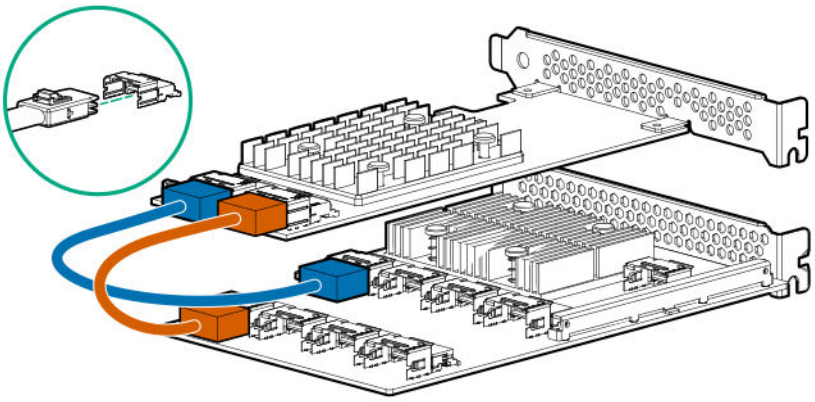

Cable routing: Front 2SFF NVMe side-by-side drive options

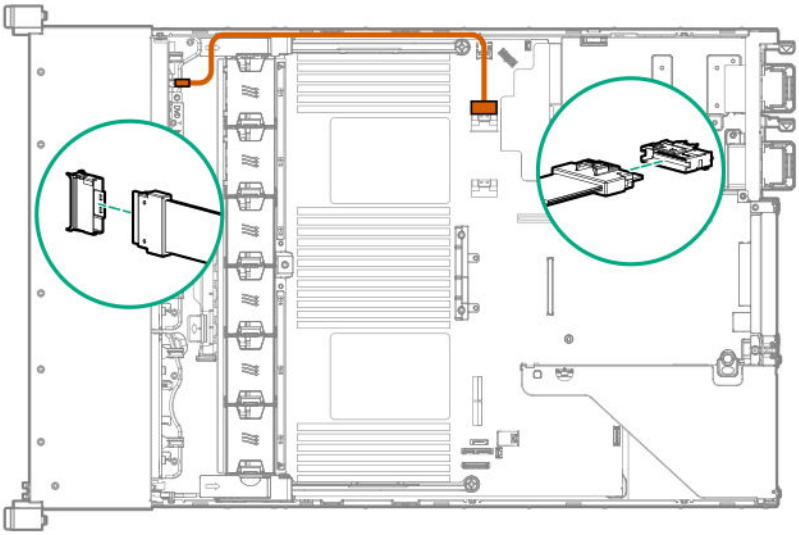

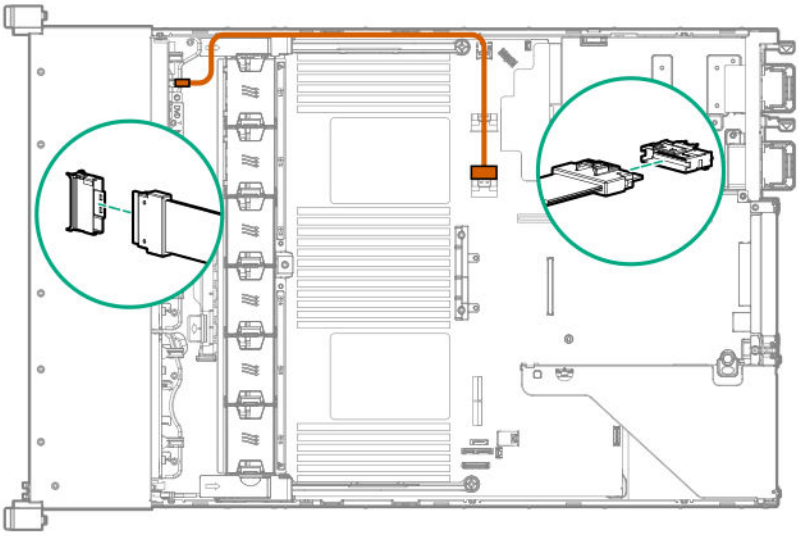

Cable routing: Front/rear 2SFF Premium

Front 2SFF to PCIe port 7B

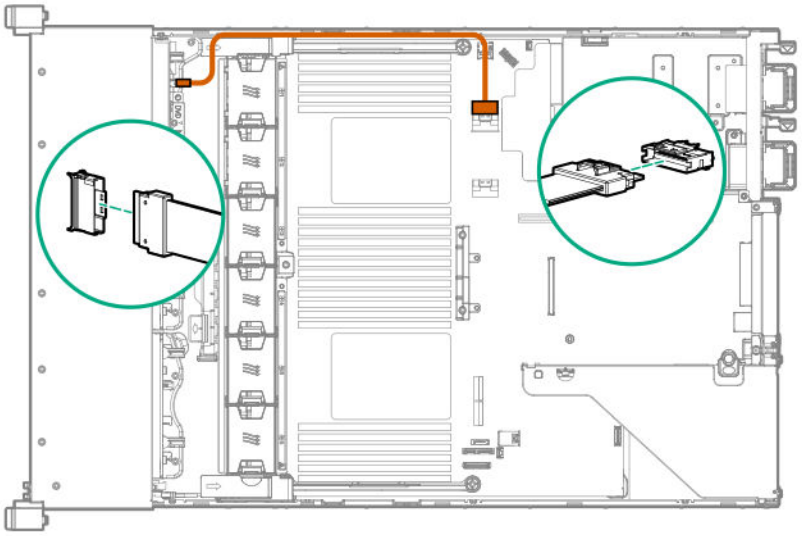

Front 2SFF to PCIe port 8B

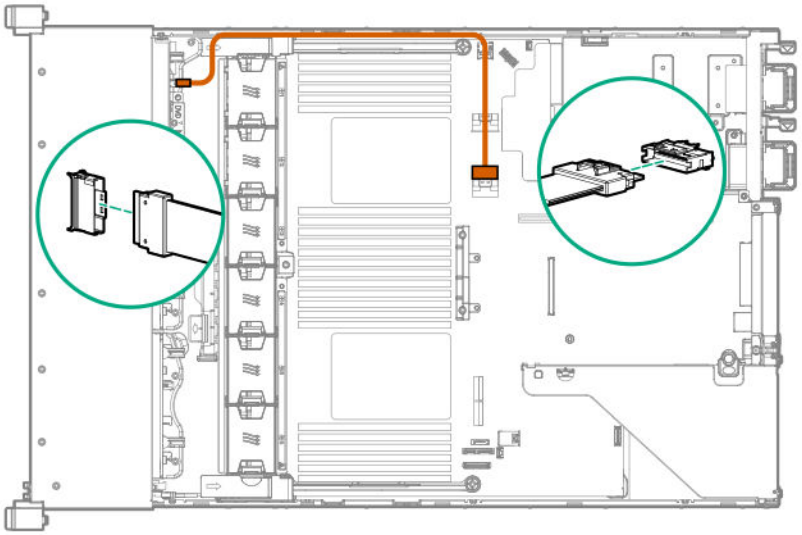

Cable routing: Front 8SFF NVMe/SAS premium drive option

The backplane shown is in box 3.

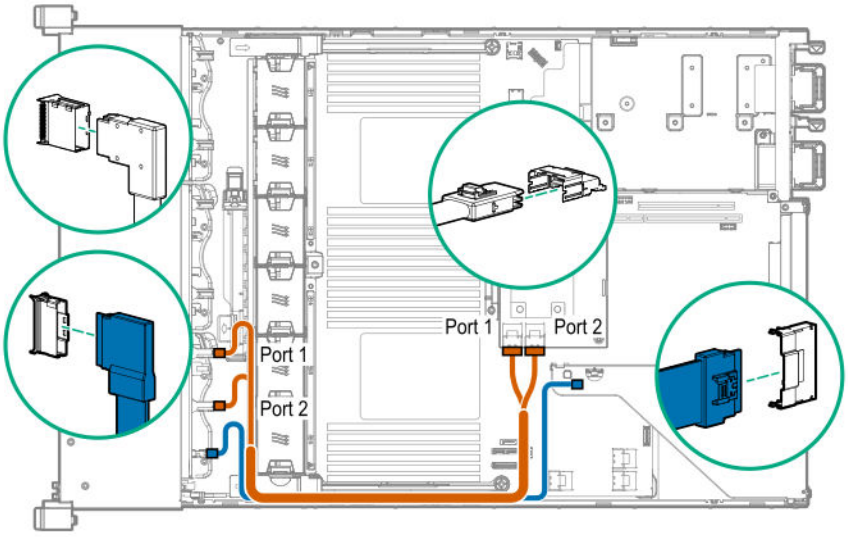

Cable routing: Front 8SFF NVMe drive options

Box 1

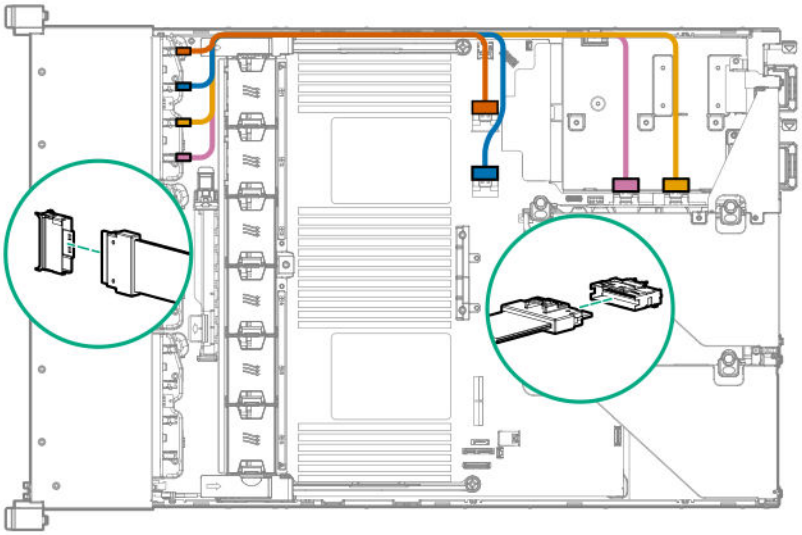

Box 2

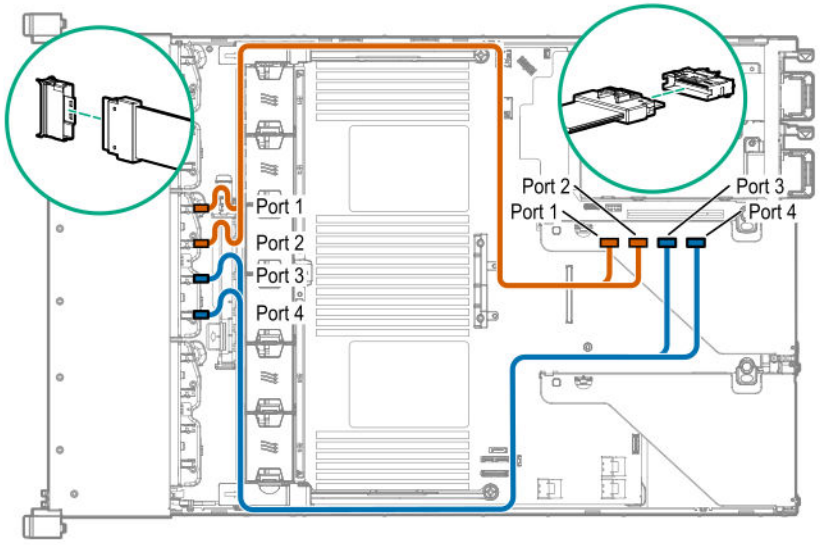
Port 1
Port 2
Port 3
Port 4
Port 2
Port 1
Port 3
Port 4

Box 3

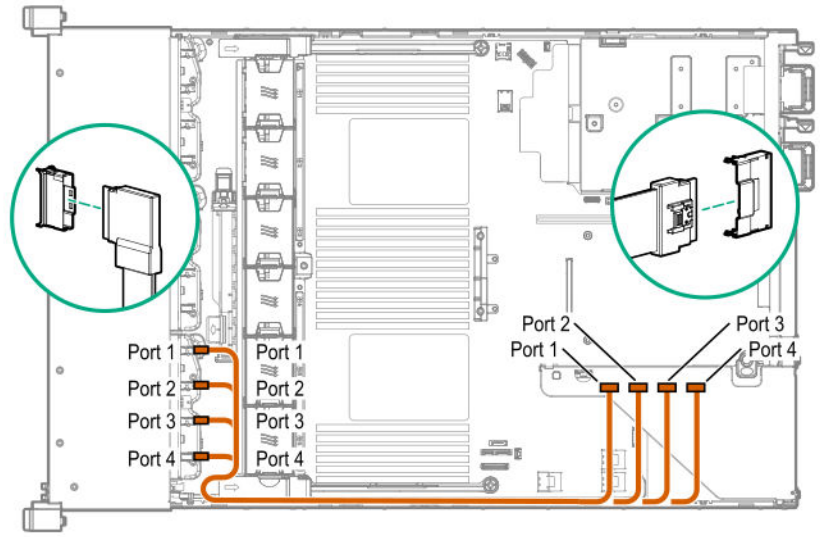
Port 1
Port 2
Port 3
Port 4
Port 1
Port 2
Port 3
Port 4
Port 2
Port 1
Port 3
Port 4

Cable routing: 8NVMe Bay 1 drive options

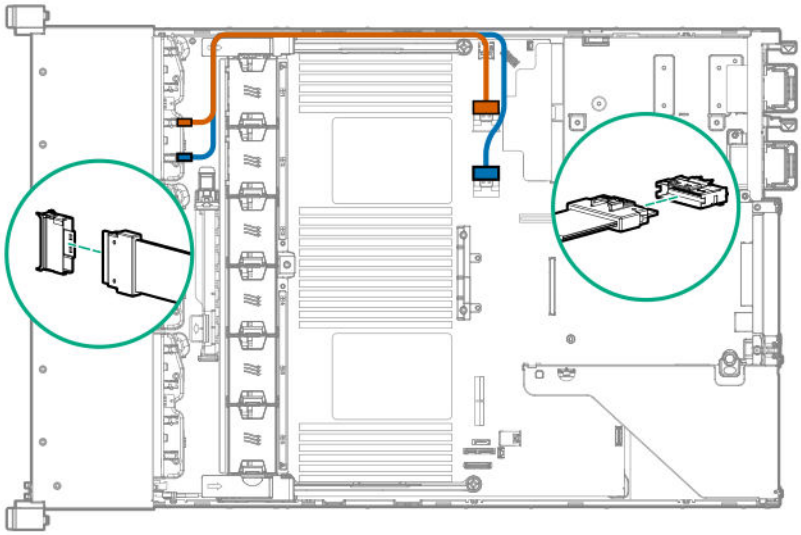

Cable routing: Bays 1 and 2 8Premium

Bay 1 to system board

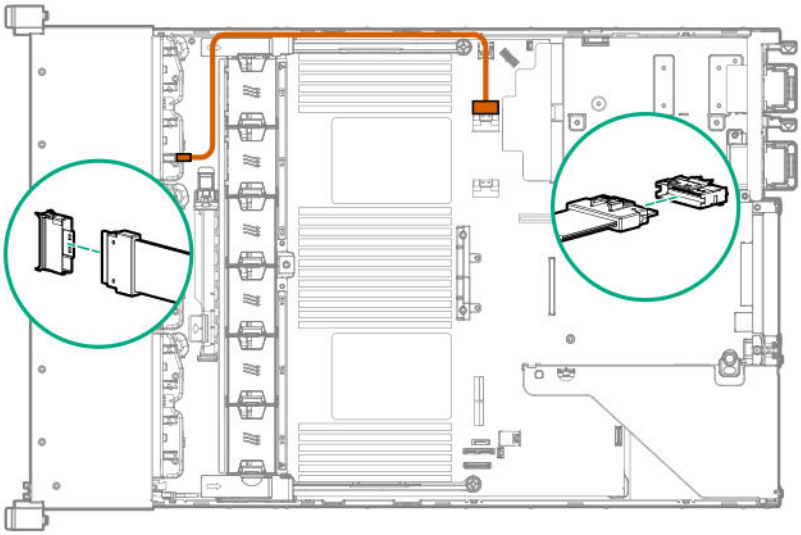

Bay 2 to system board

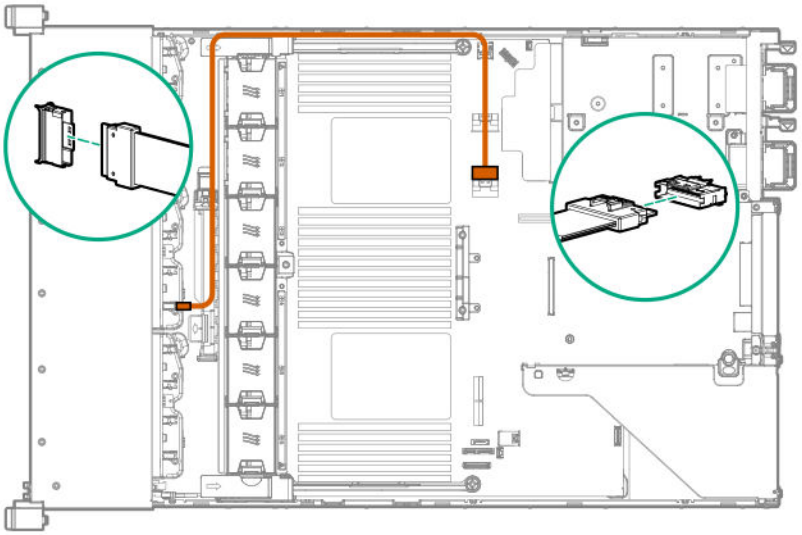

Cable routing: Storage controller backup power cable

The riser board in your server might look different from the one shown in the following illustration.

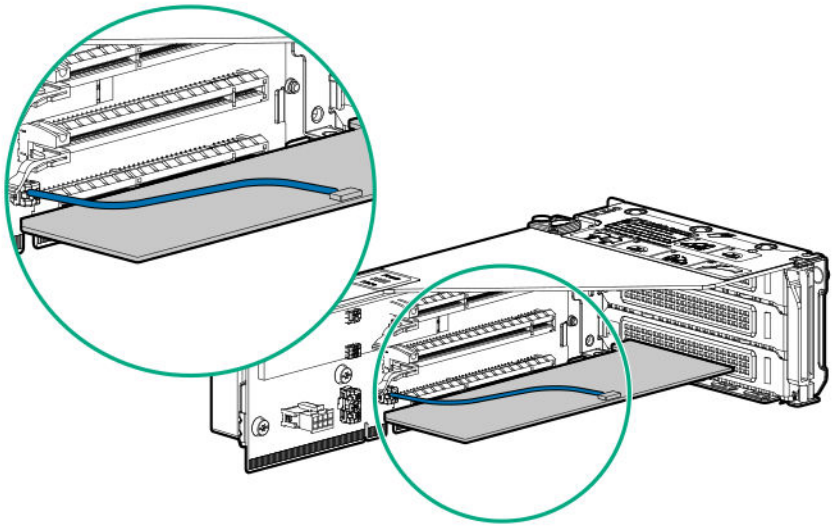

Cable routing: External USB 2.0 cable

Front 2SFF to system board

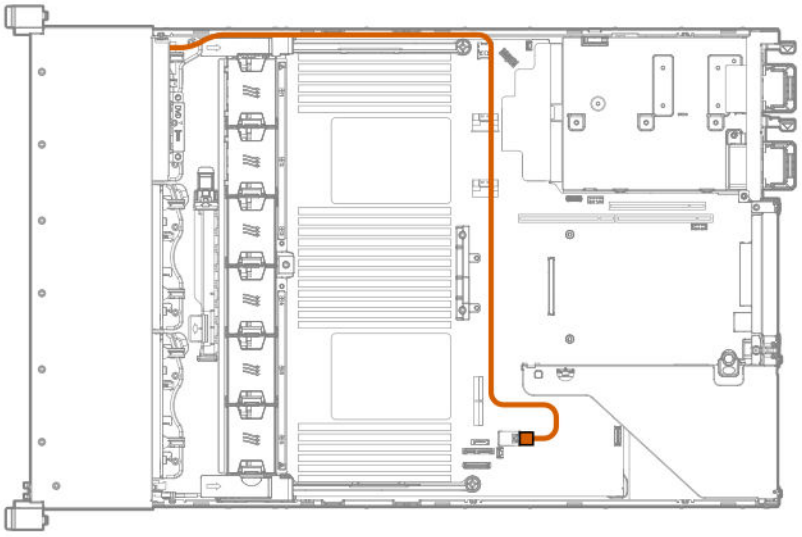

Cable routing: Power switch module/SID module

An SFF model is shown. The routing is the same for LFF.

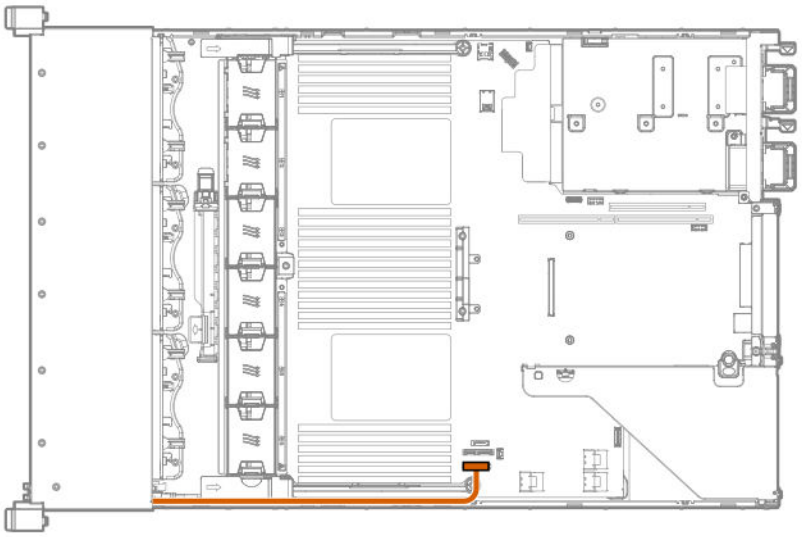

Software and configuration utilities

Server mode

The software and configuration utilities presented in this section operate in online mode, offline mode, or in both modes.

Software or configuration utility	Server mode
Active Health System	Online and Offline
HPE iLO 5	Online and Offline
HPE Smart Storage Administrator	Online and Offline
iLO RESTful API	Online and Offline
Intelligent Provisioning	Online and Offline
Scripting Toolkit for Windows and Linux	Online
Service Pack for ProLiant	Online and Offline
Smart Update Manager	Online and Offline
UEFI System Utilities	Offline
HPE MR Storage Administrator	Online
StorCLI	Online

Product QuickSpecs

For more information about product features, specifications, options, configurations, and compatibility, see the product QuickSpecs on the Hewlett Packard Enterprise website (**https://www.hpe.com/info/qs**).

Active Health System Viewer

Active Health System Viewer (AHSV) is an online tool used to read, diagnose, and resolve server issues quickly using AHS uploaded data. AHSV provides Hewlett Packard Enterprise recommended repair actions based on experience and best practices. AHSV provides the ability to:

- Read server configuration information
- View Driver/Firmware inventory
- Review Event Logs

- Respond to Fault Detection Analytics alerts
- Open new and update existing support cases

Active Health System

The Active Health System monitors and records changes in the server hardware and system configuration.

The Active Health System provides:

- Continuous health monitoring of over 1600 system parameters
- Logging of all configuration changes
- Consolidated health and service alerts with precise time stamps
- Agentless monitoring that does not affect application performance

For more information about the Active Health System, see the iLO user guide at the following website: **https://www.hpe.com/support/ilo-docs**.

Active Health System data collection

The Active Health System does not collect information about your operations, finances, customers, employees, or partners.

Examples of information that is collected:

- Server model and serial number
- Processor model and speed
- Storage capacity and speed
- Memory capacity and speed
- Firmware/BIOS and driver versions and settings

The Active Health System does not parse or change OS data from third-party error event log activities (for example, content created or passed through the OS).

Active Health System Log

The data collected by the Active Health System is stored in the Active Health System Log. The data is logged securely, isolated from the operating system, and separate from customer data. Host resources are not consumed in the collection and logging of Active Health System data.

When the Active Health System Log is full, new data overwrites the oldest data in the log.

It takes less than 5 minutes to download the Active Health System Log and send it to a support professional to help you resolve an issue.

When you download and send Active Health System data to Hewlett Packard Enterprise, you agree to have the data used for analysis, technical resolution, and quality improvements. The data that is collected is managed according to the privacy statement, available at **https://www.hpe.com/info/privacy**.

You can also upload the log to the Active Health System Viewer. For more information, see the Active Health System Viewer documentation at the following website: **https://www.hpe.com/support/ahsv-docs**.

HPE iLO 5

iLO 5 is a remote server management processor embedded on the system boards of supported HPE servers and compute modules. iLO enables the monitoring and controlling of servers from remote locations. iLO management is a powerful tool that provides multiple ways to configure, update, monitor, and repair servers remotely.

For more information about iLO, see the iLO user guide at the following website: **https://www.hpe.com/support/ilo-docs**.

iLO Federation

iLO Federation enables you to manage multiple servers from one system using the iLO web interface.

When configured for iLO Federation, iLO uses multicast discovery and peer-to-peer communication to enable communication between the systems in iLO Federation groups.

When you navigate to one of the iLO Federation pages, a data request is sent from the iLO system running the web interface to its peers, and from those peers to other peers until all data for the selected iLO Federation group is retrieved.

iLO supports the following features:

- Group health status—View server health and model information.
- Group virtual media—Connect URL-based media for access by a group of servers.
- Group power control—Manage the power status of a group of servers.
- Group power capping—Set dynamic power caps for a group of servers.
- Group firmware update—Update the firmware of a group of servers.
- Group license installation—Enter a license key to activate iLO licensed features on a group of servers.
- Group configuration—Add iLO Federation group memberships for multiple iLO systems.

Any user can view information on iLO Federation pages, but a license is required for using the following features: Group virtual media, Group power control, Group power capping, Group configuration, and Group firmware update.

For more information about iLO Federation, see the iLO user guide at the following website: **https://www.hpe.com/support/ilo-docs**.

iLO Service Port

The Service Port is a USB port with the label **iLO** on supported servers and compute modules.

To find out if your server or compute module supports this feature, see the server specifications document at the following website: **https://www.hpe.com/info/qs**.

When you have physical access to a server, you can use the Service Port to do the following:

- Download the Active Health System Log to a supported USB flash drive.

  When you use this feature, the connected USB flash drive is not accessible by the host operating system.
- Connect a client (such as a laptop) with a supported USB to Ethernet adapter to access the following:
  - iLO web interface
  - Remote console
  - iLO RESTful API
  - CLI

Hewlett Packard Enterprise recommends the HPE USB to Ethernet Adapter (part number Q7Y55A).

Some servers, such as the XL170r, require an adapter to connect a USB to Ethernet adapter to the iLO Service Port.

Hewlett Packard Enterprise recommends the HPE Micro USB to USB Adapter (part number 789904-B21).

When you use the iLO Service Port:

- Actions are logged in the iLO event log.
- The server UID flashes to indicate the Service Port status.

  You can also retrieve the Service Port status by using a REST client and the iLO RESTful API.
- You cannot use the Service Port to boot any device within the server, or the server itself.
- You cannot access the server by connecting to the Service Port.
- You cannot access the connected device from the server.

For more information about the iLO Service Port, see the iLO user guide at the following website: **https://www.hpe.com/support/ilo-docs**.

iLO RESTful API

iLO includes the iLO RESTful API, which is Redfish API conformant. The iLO RESTful API is a management interface that server management tools can use to perform configuration, inventory, and monitoring tasks by sending basic HTTPS operations (GET, PUT, POST, DELETE, and PATCH) to the iLO web server.

To learn more about the iLO RESTful API, see the Hewlett Packard Enterprise website (**https://www.hpe.com/support/restfulinterface/docs**).

For specific information about automating tasks using the iLO RESTful API, see libraries and sample code at **https://www.hpe.com/info/redfish**.

For more information, watch the **Redfish & How it works with HPE Server Management** video.

RESTful Interface Tool

The RESTful Interface Tool (iLOREST) is a scripting tool that allows you to automate HPE server management tasks. It provides a set of simplified commands that take advantage of the iLO RESTful API. You can install the tool on your computer for remote use or install it locally on a server with a Windows or Linux Operating System. The RESTful Interface Tool offers an interactive mode, a scriptable mode, and a file-based mode similar to CONREP to help decrease automation times.

For more information, see the following website: **https://www.hpe.com/info/resttool**.

iLO Amplifier Pack

iLO Amplifier Pack is an advanced server inventory, firmware and driver update solution that enables rapid discovery, detailed inventory reporting, firmware, and driver updates by leveraging iLO advanced functionality. iLO Amplifier Pack performs rapid server discovery and inventory for thousands of supported servers for the purpose of updating firmware and drivers at scale.

For more information about iLO Amplifier Pack, see the *iLO Amplifier Pack User Guide* at the following website: **https://www.hpe.com/support/ilo-ap-ug-en**.

Integrated Management Log

The IML records hundreds of events and stores them in an easy-to-view form. The IML timestamps each event with one-minute granularity.

You can view recorded events in the IML in several ways, including the following:

- From within HPE SIM
- From within the UEFI System Utilities
- From within the Embedded UEFI shell
- From within the iLO web interface

Intelligent Provisioning

Intelligent Provisioning is a single-server deployment tool embedded in ProLiant servers and HPE Synergy compute modules. Intelligent Provisioning simplifies server setup, providing a reliable and consistent way to deploy servers.

Intelligent Provisioning 3.30 and later includes HPE Rapid Setup Software. When you launch F10 mode from the POST screen, you are prompted to select whether you want to enter the Intelligent Provisioning or HPE Rapid Setup Software mode.

NOTE: After you have selected a mode, you must reprovision the server to change the mode that launches when you boot to F10.

Intelligent Provisioning prepares the system for installing original, licensed vendor media and Hewlett Packard Enterprise-branded versions of OS software. Intelligent Provisioning also prepares the system to integrate optimized server support software from the Service Pack for ProLiant (SPP). SPP is a comprehensive systems software and firmware solution for ProLiant servers, server blades, their enclosures, and HPE Synergy compute modules. These components are preloaded with a basic set of firmware and OS components that are installed along with Intelligent Provisioning.

IMPORTANT: HPE ProLiant DX/XL servers do not support operating system installation with Intelligent Provisioning, but they do support the maintenance features. For more information, see "Performing Maintenance" in the Intelligent Provisioning user guide and online help.

After the server is running, you can update the firmware to install additional components. You can also update any components that have been outdated since the server was manufactured.

To access Intelligent Provisioning:

- Press **F10** from the POST screen and enter either Intelligent Provisioning or HPE Rapid Setup Software.
- From the iLO web interface using **Always On**. **Always On** allows you to access Intelligent Provisioning without rebooting your server.

Intelligent Provisioning operation

NOTE: Intelligent Provisioning 3.40 and later requires iLO firmware version 2.10.

Intelligent Provisioning includes the following components:

- Critical boot drivers
- Active Health System (AHS)
- Erase Utility
- Deployment Settings

IMPORTANT:

- Although your server is preloaded with firmware and drivers, Hewlett Packard Enterprise recommends updating the firmware upon initial setup. Also, downloading and updating the latest version of Intelligent Provisioning ensures the latest supported features are available.
- For ProLiant servers, firmware is updated using the Intelligent Provisioning Firmware Update utility.
- Do not update firmware if the version you are currently running is required for compatibility.

NOTE: Intelligent Provisioning does not function within multihomed configurations. A multihomed host is one that is connected to two or more networks or has two or more IP addresses.

Intelligent Provisioning provides installation help for the following operating systems:

- Microsoft Windows Server
- Red Hat Enterprise Linux
- SUSE Linux Enterprise Server
- VMware ESXi/vSphere Custom Image
- ClearOS

Not all versions of an OS are supported. For information about specific versions of a supported operating system, see the OS Support Matrix on the Hewlett Packard Enterprise website (**https://www.hpe.com/info/ossupport**).

Management security

HPE ProLiant Gen10, HPE ProLiant Gen10 Plus, and HPE Apollo servers are built with some of the industry's most advanced security capabilities, out of the box, with a foundation of secure embedded management applications and firmware. The management security provided by HPE embedded management products enables secure support of modern workloads, protecting your components from unauthorized access and unapproved use. The range of embedded management and optional software and firmware available with the iLO Advanced license provides security features that help ensure protection, detection, and recovery from advanced cyber attacks. For more information, see the *HPE Gen10 and Gen10 Plus Security Reference Guide* on the Hewlett Packard Enterprise Information Library at **https://www.hpe.com/support/gen10-security-ref-en**.

Scripting Toolkit for Windows and Linux

The STK for Windows and Linux is a server deployment product that delivers an unattended automated installation for high-volume server deployments. The STK is designed to support ProLiant servers. The toolkit includes a modular set of utilities and important documentation that describes how to apply these tools to build an automated server deployment process.

The STK provides a flexible way to create standard server configuration scripts. These scripts are used to automate many of the manual steps in the server configuration process. This automated server configuration process cuts time from each deployment, making it possible to scale rapid, high-volume server deployments.

For more information or to download the STK, see the **Hewlett Packard Enterprise website**.

UEFI System Utilities

The UEFI System Utilities is embedded in the system ROM. Its features enable you to perform a wide range of configuration activities, including:

- Configuring system devices and installed options.
- Enabling and disabling system features.
- Displaying system information.
- Selecting the primary boot controller or partition.
- Configuring memory options.
- Launching other preboot environments.

HPE servers with UEFI can provide:

- Support for boot partitions larger than 2.2 TB. Such configurations could previously only be used for boot drives when using RAID solutions.
- Secure Boot that enables the system firmware, option card firmware, operating systems, and software collaborate to enhance platform security.
- UEFI Graphical User Interface (GUI)
- An Embedded UEFI Shell that provides a preboot environment for running scripts and tools.
- Boot support for option cards that only support a UEFI option ROM.

Selecting the boot mode

This server provides two **Boot Mode** configurations: UEFI Mode and Legacy BIOS Mode. Certain boot options require that you select a specific boot mode. By default, the boot mode is set to **UEFI Mode**. The system must boot in **UEFI Mode** to use certain options, including:

- Secure Boot, UEFI Optimized Boot, Generic USB Boot, IPv6 PXE Boot, iSCSI Boot, and Boot from URL
- Fibre Channel/FCoE Scan Policy

NOTE: The boot mode you use must match the operating system installation. If not, changing the boot mode can impact the ability of the server to boot to the installed operating system.

Prerequisite

When booting to **UEFI Mode**, leave **UEFI Optimized Boot** enabled.

Procedure

1. From the **System Utilities** screen, select **System Configuration** > **BIOS/Platform Configuration (RBSU)** > **Boot Options** > **Boot Mode**.
2. Select a setting.
   - **UEFI Mode** (default)—Configures the system to boot to a UEFI compatible operating system.
   - **Legacy BIOS Mode**—Configures the system to boot to a traditional operating system in Legacy BIOS compatibility mode.

3. Save your setting.
4. Reboot the server.

Secure Boot

Secure Boot is a server security feature that is implemented in the BIOS and does not require special hardware. Secure Boot ensures that each component launched during the boot process is digitally signed and that the signature is validated against a set of trusted certificates embedded in the UEFI BIOS. Secure Boot validates the software identity of the following components in the boot process:

- UEFI drivers loaded from PCIe cards
- UEFI drivers loaded from mass storage devices
- Preboot UEFI Shell applications
- OS UEFI boot loaders

When Secure Boot is enabled:

- Firmware components and operating systems with boot loaders must have an appropriate digital signature to execute during the boot process.
- Operating systems must support Secure Boot and have an EFI boot loader signed with one of the authorized keys to boot. For more information about supported operating systems, see **https://www.hpe.com/servers/ossupport**.

You can customize the certificates embedded in the UEFI BIOS by adding or removing your own certificates, either from a management console directly attached to the server, or by remotely connecting to the server using the iLO Remote Console.

You can configure Secure Boot:

- Using the **System Utilities** options described in the following sections.
- Using the iLO RESTful API to clear and restore certificates. For more information, see the Hewlett Packard Enterprise website (**https://www.hpe.com/info/redfish**).
- Using the `secboot` command in the Embedded UEFI Shell to display Secure Boot databases, keys, and security reports.

Launching the Embedded UEFI Shell

Use the **Embedded UEFI Shell** option to launch the Embedded UEFI Shell. The Embedded UEFI Shell is a preboot command-line environment for scripting and running UEFI applications, including UEFI boot loaders. The Shell also provides CLI-based commands you can use to obtain system information, and to configure and update the system BIOS.

Prerequisites

Embedded UEFI Shell is set to **Enabled**.

Procedure

1. From the **System Utilities** screen, select **Embedded Applications** > **Embedded UEFI Shell**.

   The **Embedded UEFI Shell** screen appears.
2. Press any key to acknowledge that you are physically present.

This step ensures that certain features, such as disabling **Secure Boot** or managing the **Secure Boot** certificates using third-party UEFI tools, are not restricted.

3. If an administrator password is set, enter it at the prompt and press **Enter**.

   The `Shell>` prompt appears.

4. Enter the commands required to complete your task.
5. Enter the `exit` command to exit the Shell.

HPE Smart Storage Administrator

HPE SSA is the main tool for configuring arrays on HPE Smart Array SR controllers. It exists in three interface formats: the HPE SSA GUI, the HPE SSA CLI, and HPE SSA Scripting. All formats provide support for configuration tasks. Some of the advanced tasks are available in only one format.

The diagnostic features in HPE SSA are also available in the standalone software HPE Smart Storage Administrator Diagnostics Utility CLI.

During the initial provisioning of the server or compute module, an array is required to be configured before the operating system can be installed. You can configure the array using SSA.

HPE SSA is accessible both offline (either through HPE Intelligent Provisioning or as a standalone bootable ISO image) and online:

- Accessing HPE SSA in the offline environment

  IMPORTANT: If you are updating an existing server in an offline environment, obtain the latest version of HPE SSA through Service Pack for ProLiant before performing configuration procedures.

  Using one of multiple methods, you can run HPE SSA before launching the host operating system. In offline mode, users can configure or maintain detected and supported devices, such as optional Smart Array controllers and integrated Smart Array controllers. Some HPE SSA features are only available in the offline environment, such as setting the boot controller and boot volume.

- Accessing HPE SSA in the online environment

  This method requires an administrator to download the HPE SSA executables and install them. You can run HPE SSA online after launching the host operating system.

For more information, see *HPE Smart Array SR Gen10 Configuration Guide* at the **Hewlett Packard Enterprise website**.

HPE MR Storage Administrator

HPE MR Storage Administrator is a web-based application that enables you to monitor, configure, maintain, and troubleshoot the HPE Smart Array MR controller. MR Storage Administrator enables you to view, create, and manage storage configurations.

IMPORTANT: The HPE MR Storage Administrator manages **only** the HPE Smart Array MR controllers. It does not manage HPE Smart Array SR controllers.

- **Monitoring and configuring**: MR Storage Administrator enables you to monitor the controllers and configure the drives on the controller. It displays the status of the controller cards, logical drives, and drives on the controller. The device status icons notify you if there are drive failures and other events that require your immediate attention. Email notifications about the status of the server are sent based on your alert settings. The system errors and events are recorded and displayed in an event log file. You can also import or clear foreign configurations.

IMPORTANT: Limited alerting and monitoring is available through iLO when HPE Agentless Management Service is installed. The HPE Smart Array P824i-p MR Gen10 controller supports limited alerts through iLO using the AMS agent.

- **Maintaining**: Using MR Storage Administrator, you can perform system maintenance tasks, such as updating the controller firmware.
- **Troubleshooting**: MR Storage Administrator displays information related to drive failures, device failures, and other issues. It also provides recommendations and displays contextual links, helping you to locate the drives/devices that have issues and troubleshoot them. You can also download a report of the devices and their configurations, properties, and settings and send it to Hewlett Packard Enterprise Support for further troubleshooting.

Obtain MR Storage Administrator installation files through the Service Pack for ProLiant, or SPP, which you can download from the Hewlett Packard Enterprise website (**https://www.hpe.com/servers/spp/download**). Be sure to use the latest SPP version for the server.

For more information about the MR Storage Administrator, see *MR Storage Administrator User Guide* on the Hewlett Packard Enterprise website (**https://www.hpe.com/info/P824i-pdocs**).

HPE InfoSight for servers

The HPE InfoSight portal is a secure web interface hosted by HPE that allows you to monitor supported devices through a graphical interface.

HPE InfoSight for servers:

- Combines the machine learning and predictive analytics of HPE InfoSight with the health and performance monitoring of Active Health System (AHS) and HPE iLO to optimize performance and predict and prevent problems
- Provides automatic collection and analysis of the sensor and telemetry data from AHS to derive insights from the behaviors of the install base to provide recommendations to resolve problems and improve performance

For more information on getting started and using HPE InfoSight for servers, go to: **https://www.hpe.com/info/infosight-servers-docs**.

StorCLI

The Storage Command Line Interface (StorCLI) tool is the command line management software designed for the HPE Smart Array MR controller. StorCLI is a command line interface that is designed to be easy to use, consistent, and easy to script.

Obtain StorCLI through the Service Pack for ProLiant, or SPP, which you can download from **https://www.hpe.com/servers/spp/download**. Be sure to use the latest SPP version for the server.

For more information about StorCLI, see *StorCLI User Guide* on the Hewlett Packard Enterprise website **https://www.hpe.com/info/P824i-pdocs**.

USB support

Hewlett Packard Enterprise Gen10 and Gen10 Plus servers support all USB operating speeds depending on the device that is connected to the server.

External USB functionality

Hewlett Packard Enterprise provides external USB support to enable local connection of USB devices for server administration, configuration, and diagnostic procedures.

For additional security, external USB functionality can be disabled through USB options in UEFI System Utilities.

Redundant ROM support

The server enables you to upgrade or configure the ROM safely with redundant ROM support. The server has a single ROM that acts as two separate ROM images. In the standard implementation, one side of the ROM contains the current ROM program version, while the other side of the ROM contains a backup version.

NOTE: The server ships with the same version programmed on each side of the ROM.

Safety and security benefits

When you flash the system ROM, the flashing mechanism writes over the backup ROM and saves the current ROM as a backup, enabling you to switch easily to the alternate ROM version if the new ROM becomes corrupted for any reason. This feature protects the existing ROM version, even if you experience a power failure while flashing the ROM.

Keeping the system current

Updating firmware or system ROM

To update firmware or system ROM, use one of the following methods:

- The **Firmware Update** option in the System Utilities.
- The `fwupdate` command in the **Embedded UEFI Shell**.
- Service Pack for ProLiant (SPP)
- HPE online flash components
- Moonshot Component Pack

Service Pack for ProLiant

SPP is a systems software and firmware solution delivered as a single ISO file download. This solution uses SUM as the deployment tool and is tested and supports HPE ProLiant, HPE BladeSystem, HPE Synergy, and HPE Apollo servers and infrastructure.

SPP, along with SUM and SUT, provides Smart Update system maintenance tools that systematically update HPE ProLiant, HPE BladeSystem, HPE Synergy, and HPE Apollo servers and infrastructure.

SPP can be used in an online mode on a server running Windows, Linux, or VMware vSphere ESXi, or in an offline mode where the server is booted to an operating system included in the ISO file.

The preferred method for downloading an SPP is using the SPP Custom Download at **https://www.hpe.com/servers/spp/custom**.

The SPP is also available for download from the SPP download page at **https://www.hpe.com/servers/spp/download**.

Smart Update Manager

SUM is an innovative tool for maintaining and updating the firmware, drivers, and system software of HPE ProLiant, HPE BladeSystem, HPE Synergy, and HPE Apollo servers, infrastructure, and associated options.

SUM identifies associated nodes you can update at the same time to avoid interdependency issues.

Key features of SUM include:

- Discovery engine that finds installed versions of hardware, firmware, and software on nodes.
- SUM deploys updates in the correct order and ensures that all dependencies are met before deploying an update.
- Interdependency checking.
- Automatic and step-by-step Localhost Guided Update process.
- Web browser-based user interface.
- Ability to create custom baselines and ISOs.
- Support for iLO Repository (Gen10 or later iLO 5 nodes only).
- Simultaneous firmware and software deployment for multiple remote nodes.
- Local offline firmware deployments with SPP deliverables.
- Extensive logging in all modes.

NOTE: SUM does not support third-party controllers, including flashing hard drives behind the controllers.

Integrated Smart Update Tools

Integrated Smart Update Tools (SUT) is the smart update solution for performing online firmware and driver updates. SUT is used with iLO 4, iLO 5, and with update solutions (management appliances such as iLO Amplifier Pack or HPE OneView and Smart Update Manager (SUM) to stage, install, and activate firmware and driver updates.

The solution must be installed on the operating system, where it updates results through Rich Infrastructure Services (RIS) communication.

- **SUT**: Polls iLO to check for requests from SUM or iLO Amplifier Pack for updates through the management network and orchestrates staging, deploying, and activating updates. You can adjust the polling interval by issuing the appropriate command-line option provided by SUT. Performs inventory on target servers, stages deployment, deploys updates, and then reboots the servers.
- **iLO 5 with integrated Smart Update** (Gen10 or later servers only): Performs iLO Repository-based updates by downloading the components from iLO Repository when iLO Installation Queue has the components which can be updated by SUT.
- **iLO Amplifier Pack and HPE OneView**: Displays available updates for servers. Communicates with SUT (or SUT 1.x) to initiate updates using the iLO Redfish interface. SUT reports the status of updates to iLO Amplifier Pack through iLO Restful Interface.
- **SUM**: A tool for firmware and driver maintenance for HPE ProLiant servers and associated options.

NOTE: SUM and iLO Amplifier Pack should not manage the same nodes.

Updating firmware from the System Utilities

Use the **Firmware Updates** option to update firmware components in the system, including the system BIOS, NICs, and storage cards.

Procedure

1. Access the System ROM Flash Binary component for your server from the Hewlett Packard Enterprise Support Center.
2. Copy the binary file to a USB media or iLO virtual media.
3. Attach the media to the server.
4. Launch the **System Utilities**, and select **Embedded Applications** > **Firmware Update**.
5. Select a device.

   The **Firmware Updates** screen lists details about your selected device, including the current firmware version in use.
6. Select **Select Firmware File**.
7. Select the flash file in the **File Explorer** list.

   The firmware file is loaded and the **Firmware Updates** screen lists details of the file in the **Selected firmware file** field.
8. Select **Image Description**, and then select a firmware image.

   A device can have multiple firmware images.
9. Select **Start firmware update**.

Updating the firmware from the UEFI Embedded Shell

Procedure

1. Access the System ROM Flash Binary component for your server from the Hewlett Packard Enterprise Support Center (**https://www.hpe.com/support/hpesc**).
2. Copy the binary file to a USB media or iLO virtual media.
3. Attach the media to the server.
4. Boot to the UEFI Embedded Shell.
5. To obtain the assigned file system volume for the USB key, enter `map -r`.
6. Change to the file system that contains the System ROM Flash Binary component for your server. Enter one of the `fsx` file systems available, such as `fs0:` or `fs1:`, and press **Enter**.
7. Use the `cd` command to change from the current directory to the directory that contains the binary file.
8. Flash the system ROM by entering `fwupdate -d BIOS -f` *`filename`*.
9. Reboot the server. A reboot is required after the firmware update in order for the updates to take effect and for hardware stability to be maintained.

Online Flash components

This component provides updated system firmware that can be installed directly on supported operating systems. Additionally, when used in conjunction with SUM, this Smart Component allows the user to update firmware on remote servers from a central location. This remote deployment capability eliminates the need for the user to be physically present at the server to perform a firmware update.

Drivers

IMPORTANT: Always perform a backup before installing or updating device drivers.

Update drivers using any of the following **Smart Update Solutions**:

- Download the latest Service Pack for ProLiant (includes Smart Update Manager)
- Create a custom SPP download
- Download Smart Update Manager for Linux
- Download specific drivers

  To locate the drivers for a server, go to the **Hewlett Packard Enterprise Support Center website**, and then search for the product name/number.

Software and firmware

Update software and firmware before using the server for the first time, unless any installed software or components require an older version.

For system software and firmware updates, use one of the following sources:

- Download the SPP from the Hewlett Packard Enterprise website (**https://www.hpe.com/servers/spp/download**).
- Download individual drivers, firmware, or other system software components from the server product page in the Hewlett Packard Enterprise Support Center website (**https://www.hpe.com/support/hpesc**).

Operating system version support

For information about specific versions of a supported operating system, refer to the **operating system support matrix**.

HPE Pointnext Portfolio

HPE Pointnext delivers confidence, reduces risk, and helps customers realize agility and stability. Hewlett Packard Enterprise helps customers succeed through Hybrid IT by simplifying and enriching the on-premise experience, informed by public cloud qualities and attributes.

Operational Support Services enable you to choose the right service level, length of coverage, and response time to fit your business needs. For more information, see the Hewlett Packard Enterprise website:

https://www.hpe.com/us/en/services/operational.html

Utilize the Advisory and Transformation Services in the following areas:

- Private or hybrid cloud computing
- Big data and mobility requirements
- Improving data center infrastructure
- Better use of server, storage, and networking technology

For more information, see the Hewlett Packard Enterprise website:

https://www.hpe.com/services/consulting

Proactive notifications

30 to 60 days in advance, Hewlett Packard Enterprise sends notifications to subscribed customers on upcoming:

- Hardware, firmware, and software changes
- Bulletins
- Patches
- Security alerts

You can subscribe to proactive notifications on the **Hewlett Packard Enterprise website**.

Troubleshooting

NMI functionality

An NMI crash dump enables administrators to create crash dump files when a system is hung and not responding to traditional debugging methods.

An analysis of the crash dump log is an essential part of diagnosing reliability problems, such as hanging operating systems, device drivers, and applications. Many crashes freeze a system, and the only available action for administrators is to cycle the system power. Resetting the system erases any information that could support problem analysis, but the NMI feature preserves that information by performing a memory dump before a hard reset.

To force the OS to initiate the NMI handler and generate a crash dump log, the administrator can use the iLO Generate NMI feature.

Troubleshooting resources

Troubleshooting resources are available for HPE Gen10 and Gen10 Plus server products in the following documents:

- *Troubleshooting Guide for HPE ProLiant Gen10 and Gen10 Plus servers* provides procedures for resolving common problems and comprehensive courses of action for fault isolation and identification, issue resolution, and software maintenance.
- *Error Message Guide for HPE ProLiant Gen10 servers and HPE Synergy* provides a list of error messages and information to assist with interpreting and resolving error messages.
- *Error Message Guide for HPE ProLiant Gen10 Plus servers and HPE Synergy* provides a list of error messages and information to assist with interpreting and resolving error messages.
- *Integrated Management Log Messages and Troubleshooting Guide for HPE ProLiant Gen10 and Gen10 Plus servers and HPE Synergy* provides IML messages and associated troubleshooting information to resolve critical and cautionary IML events.

To access troubleshooting resources for your product, see the Hewlett Packard Enterprise Information Library:

- For Gen10 servers, see **https://www.hpe.com/info/gen10-troubleshooting**.
- For Gen10 Plus servers, see **https://www.hpe.com/info/gen10plus-troubleshooting**.

System battery replacement

System battery information

The server contains an internal lithium manganese dioxide, a vanadium pentoxide, or an alkaline battery that provides power to the real-time clock. If this battery is not properly handled, a risk of the fire and burns exists. To reduce the risk of personal injury:

- Do not attempt to recharge the battery.
- Do not expose the battery to temperatures higher than 60°C (140°F).
- Do not expose the battery to extremely low air pressure as it might lead to explosion or leakage of flammable liquid or gas.
- Do not disassemble, crush, puncture, short external contacts, or dispose the battery in fire or water.
- If the server no longer automatically displays the correct date and time, then replace the battery that provides power to the real-time clock. Under normal use, battery life is 5 to 10 years.

Replace the system battery

Prerequisites

Before you perform this procedure make sure you have a small flat-bladed, nonconductive tool available.

Procedure

1. **Power down the server**.
2. Remove all power:
   a. Disconnect each power cord from the power source.
   b. Disconnect each power cord from the server.
3. Do one of the following:
   - **Extend the server from the rack**.
   - **Remove the server from the rack**.
4. **Remove the access panel**.
5. If installed, **remove the tertiary riser cage**.
6. **Locate the battery on the system board**.
7. Use a small flat-bladed, nonconductive tool to carefully lift the front of the battery from the socket.
8. Remove the battery.

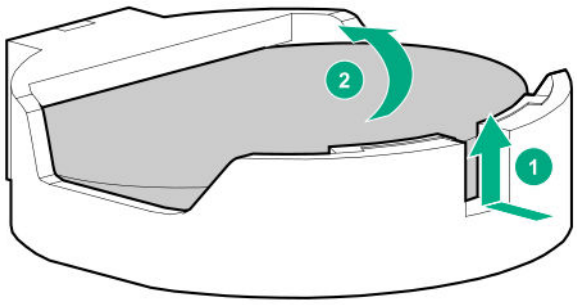

9. Install the system battery.

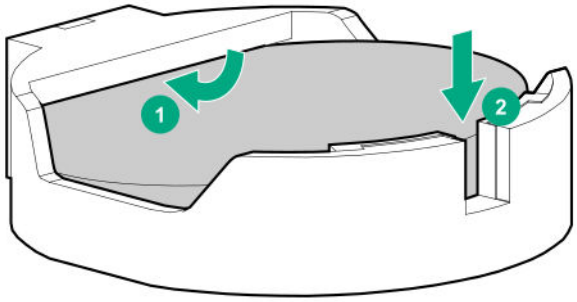

For more information about battery replacement or proper disposal, contact an authorized reseller or an authorized service provider.

Safety, warranty, and regulatory information

Regulatory information

To view the regulatory information for your product, view the *Safety and Compliance Information for Server, Storage, Power, Networking, and Rack Products*, available at the Hewlett Packard Enterprise Support Center:

https://www.hpe.com/support/Safety-Compliance-EnterpriseProducts

Additional regulatory information

Hewlett Packard Enterprise is committed to providing our customers with information about the chemical substances in our products as needed to comply with legal requirements such as REACH (Regulation EC No 1907/2006 of the European Parliament and the Council). A chemical information report for this product can be found at:

https://www.hpe.com/info/reach

For Hewlett Packard Enterprise product environmental and safety information and compliance data, including RoHS and REACH, see:

https://www.hpe.com/info/ecodata

For Hewlett Packard Enterprise environmental information, including company programs, product recycling, and energy efficiency, see:

https://www.hpe.com/info/environment

Notices for Eurasian Economic Union

EAC

Manufacturer and Local Representative Information

Manufacturer information:

Hewlett Packard Enterprise, 6280 America Center Drive, San Jose, CA 95002 U.S.

Local representative information Russian:

- **Russia**

  ООО "Хьюлетт Паккард Энтерпрайз", Российская Федерация, 125171, г. Москва, Ленинградское шоссе, 16А, стр.3, Телефон: +7 499 403 4248 Факс: +7 499 403 4677

- **Kazakhstan**

  ТОО «Хьюлетт-Паккард (К)», Республика Казахстан, 050040, г. Алматы, Бостандыкский район, проспект Аль-Фараби, 77/7, Телефон/факс: + 7 727 355 35 50

Local representative information Kazakh:

- **Russia**

  ЖШС "Хьюлетт Паккард Энтерпрайз", Ресей Федерациясы, 125171, Мәскеу, Ленинград тас жолы, 16А блок 3, Телефон: +7 499 403 4248 Факс: +7 499 403 4677

- **Kazakhstan**

ЖШС «Хьюлетт-Паккард (К)», Қазақстан Республикасы, 050040, Алматы к., Бостандық ауданы, Әл-Фараби даңғ ылы, 77/7, Телефон/факс: +7 727 355 35 50

Manufacturing date:

The manufacturing date is defined by the serial number.

```
CCSYWWZZZZ (product serial number format)
     | | |
     | | |
     | | WW = Week of manufacture (calendar week)
     |
     Y = Year of manufacture (decade, year)
```

If you need help identifying the manufacturing date, contact **tre@hpe.com**.

Turkey RoHS material content declaration

Türkiye Cumhuriyeti: AEEE Yönetmeliğine Uygundur

Ukraine RoHS material content declaration

Обладнання відповідає вимогам Технічного регламенту щодо обмеження використання деяких небезпечних речовин в електричному та електронному обладнанні, затвердженого постановою Кабінету Міністрів України від 3 грудня 2008 № 1057

Warranty information

To view the warranty information for your product, see the links provided below:

HPE ProLiant and IA-32 Servers and Options

https://www.hpe.com/support/ProLiantServers-Warranties

HPE Enterprise and Cloudline Servers

https://www.hpe.com/support/EnterpriseServers-Warranties

HPE Storage Products

https://www.hpe.com/support/Storage-Warranties

HPE Networking Products

https://www.hpe.com/support/Networking-Warranties

Specifications

Environmental specifications

Specification	Value
Temperature range [1]	—
Operating	10°C to 35°C (50°F to 95°F)
Nonoperating	-30°C to 60°C (-22°F to 140°F)
Relative humidity (noncondensing)	—
Operating	Minimum to be the higher (more moisture) of -12°C (10.4°F) dew point or 8% relative humidity Maximum to be 24°C (75.2°F) dew point or 90% relative humidity
Nonoperating	5% to 95% 38.7°C (101.7°F), maximum wet bulb temperature

[1] All temperature ratings shown are for sea level. An altitude derating of 1.0°C per 304.8 m (1.8°F per 1000 ft) to 3048 m (10,000 ft) is applicable. No direct sunlight allowed. Maximum rate of change is 20°C per hour (36°F per hour). The upper limit and rate of change might be limited by the type and number of options installed.

For certain approved hardware configurations, the supported system inlet temperature range is extended:

- 5°C to 10°C (41°F to 50°F) and 35°C to 40°C (95°F to 104°F) at sea level with an altitude derating of 1.0°C per every 175 m (1.8°F per every 574 ft) above 900 m (2953 ft) to a maximum of 3048 m (10,000 ft).
- 40°C to 45°C (104°F to 113°F) at sea level with an altitude derating of 1.0°C per every 125 m (1.8°F per every 410 ft) above 900 m (2953 ft) to a maximum of 3048 m (10,000 ft).

The approved hardware configurations for this system are listed on the **Hewlett Packard Enterprise website**.

Mechanical specifications

Specification	Value
Height	8.73 cm (3.44 in)
Depth, SFF	67.94 cm (26.75 in)
Depth, LFF	73.02 cm (28.75 in)
Width	44.54 cm (17.54 in)
Weight, SFF minimum	14.9 kg (32.75 lbs)
Weight, SFF maximum	19.5kg (43.00 lbs)

Table Continued

Specification	Value
Weight, LFF minimum	17.1 kg (37.75 lbs)
Weight, LFF maximum	24.5 kg (54 lbs)

Power supply specifications

Depending on the installed options and the regional location where the server was purchased, the server can be configured with one of the following power supplies:

- **HPE 500W Flex Slot Platinum Hot-plug Low Halogen Power Supply**
- **HPE 800W Flex Slot Platinum Hot-plug Low Halogen Power Supply**
- **HPE 800W Flex Slot Titanium Hot-plug Low Halogen Power Supply**
- **HPE 800W Flex Slot Universal Hot-plug Low Halogen Power Supply**
- **HPE 800W Flex Slot -48VDC Hot-plug Low Halogen Power Supply**
- **HPE 1600 W Flex Slot Platinum Hot-plug Low Halogen Power Supply**

For detailed power supply specifications, see the QuickSpecs on the **Hewlett Packard Enterprise website**.

HPE 500W Flex Slot Platinum Hot-plug Low Halogen Power Supply

Specification	Value
Input requirements	—
Rated input voltage	100 VAC to 240 VAC 240 VDC for China only
Rated input frequency	50 Hz to 60 Hz Not applicable to 240 VDC
Rated input current	5.6 A at 100 VAC 2.7 A at 200 VAC 2.3 A at 240 VDC for China only
Maximum rated input power	557 W at 100 VAC 539 W at 200 VAC 537 W at 240 VDC for China only
BTUs per hour	1902 at 100 VAC 1840 at 200 VAC 1832 at 240 VDC for China only

Table Continued

Specification	Value
Power supply output	—
Rated steady-state power	500 W at 100 VAC to 127 VAC input 500 W at 100 VAC to 240 VAC input 500 W at 240 VDC input for China only
Maximum peak power	500 W at 100 VAC to 127 VAC input 500 W at 100 VAC to 240 VAC input 500 W at 240 VDC input for China only

HPE 800W Flex Slot Platinum Hot-plug Low Halogen Power Supply

Specification	Value
Input requirements	—
Rated input voltage	100 VAC to 127 VAC 200 VAC to 240 VAC 240 VDC for China only
Rated input frequency	50 Hz to 60 Hz Not applicable to 240 VDC
Rated input current	9.1 A at 100 VAC 4.4 A at 200 VAC 3.6 A at 240 VDC for China only
Maximum rated input power	899 W at 100 VAC 867 W at 200 VAC 864 W at 240 VDC for China only
BTUs per hour	3067 at 100 VAC 2958 at 200 VAC 2949 at 240 VAC for China only
Power supply output	—

Table Continued

Specification	Value
Rated steady-state power	800 W at 100 VAC to 127 VAC input 800 W at 100 VAC to 240 VAC input 800 W at 240 VDC input for China only
Maximum peak power	800 W at 100 VAC to 127 VAC input 800 W at 100 VAC to 240 VAC input 800 W at 240 VDC input for China only

HPE 800W Flex Slot Titanium Hot-plug Low Halogen Power Supply

Specification	Value
Input requirements	—
Rated input voltage	200 VAC to 240 VAC 240 VDC for China only
Rated input frequency	50 Hz to 60 Hz Not applicable to 240 VDC
Rated input current	4.35 A at 200 VAC 3.62 A at 240 VAC 3.62 A at 240 VDC for China only
Maximum rated input power	851 W at 200 VAC 848 W at 240 VAC 848 W at 240 VDC for China only
BTUs per hour	2905 at 200 VAC 2893 at 240 VAC 2893 at 240 VDC for China only
Power supply output	—
Rated steady-state power	800 W at 200 VAC to 240 VAC input 800 W at 240 VDC input for China only
Maximum peak power	800 W at 200 VAC to 240 VAC input 800 W at 240 VDC input for China only

HPE 800W Flex Slot Universal Hot-plug Low Halogen Power Supply

Specification	Value
Input requirements	—
Rated input voltage	200 VAC to 277 VAC 380 VDC
Rated input frequency	50 Hz to 60 Hz
Rated input current	4.4 A at 200 VAC 3.1 A at 277 VAC 2.3 A at 380 VDC
Maximum rated input power	869 W at 200 VAC 865 W at 230 VAC 861 W at 277 VAC 863 W at 380 VDC
BTUs per hour	2964 at 200 VAC 2951 at 230 VAC 2936 at 277 VAC 2943 at 380 VDC
Power supply output	—
Rated steady-state power	800 W at 200 VAC to 277 VAC input
Maximum peak power	800 W at 200 VAC to 277 VAC input

HPE 800W Flex Slot -48VDC Hot-plug Low Halogen Power Supply

Specification	Value
Input requirements	—
Rated input voltage	-40 VDC to -72 VDC -48 VDC nominal input
Rated input current	22.1 A at -40 VDC input 18.2 A at -48 VDC input, nominal input 12.0 A at -72 VDC input

Table Continued

Specification	Value
Rated input power (W)	874 W at -40 VDC input 865 W at -48 VDC input, nominal input 854 W at -72 VDC input
Rated input power (BTUs per hour)	2983 at -40 VDC input 2951 at -48 VDC input, nominal input 2912 at -72 VDC input
Power supply output	—
Rated steady-state power (W)	800 W at -40 VDC to -72 VDC
Maximum peak power (W)	800 W at -40 VDC to -72 VDC
Maximum peak power	800 W at -40 VDC to -72 VDC input

WARNING: To reduce the risk of electric shock or energy hazards:

- This equipment must be installed by trained service personnel.
- Connect the equipment to a reliably grounded secondary circuit source. A secondary circuit has no direct connection to a primary circuit and derives its power from a transformer, converter, or equivalent isolation device.
- The branch circuit overcurrent protection must be rated 27 A.

CAUTION: This equipment is designed to permit the connection of the earthed conductor of the DC supply circuit to the earthing conductor at the equipment.

If this connection is made, all of the following must be met:

- This equipment must be connected directly to the DC supply system earthing electrode conductor or to a bonding jumper from an earthing terminal bar or bus to which the DC supply system earthing electrode conductor is connected.
- This equipment must be located in the same immediate area (such as adjacent cabinets) as any other equipment that has a connection between the earthed conductor of the same DC supply circuit and the earthing conductor, and also the point of earthing of the DC system. The DC system must be earthed elsewhere.
- The DC supply source is to be located within the same premises as the equipment.
- Switching or disconnecting devices must not be in the earthed circuit conductor between the DC source and the point of connection of the earthing electrode conductor.

HPE 1600 W Flex Slot Platinum Hot-plug Low Halogen Power Supply

Specification	Value
Input requirements	—
Rated input voltage	200 VAC to 240 VAC 240 VDC for China only
Rated input frequency	50 Hz to 60 Hz
Rated input current	8.7 A at 200 VAC 7.2 A at 240 VAC
Maximum rated input power	1734 W at 200 VAC 1725 W at 240 VAC
BTUs per hour	5918 at 200 VAC 5884 at 240 VAC
Power supply output	—
Rated steady-state power	1600 W at 200 VAC to 240 VAC input 1600 W at 240 VDC input
Maximum peak power	2200 W for 1 ms (turbo mode) at 200 VAC to 240 VAC input

Websites

General websites

Hewlett Packard Enterprise Information Library

https://www.hpe.com/info/EIL

Single Point of Connectivity Knowledge (SPOCK) Storage compatibility matrix

https://www.hpe.com/storage/spock

Storage white papers and analyst reports

https://www.hpe.com/storage/whitepapers

For additional websites, see **Support and other resources**.

Product websites

HPE ProLiant DL385 Gen10 Server product page

https://www.hpe.com/servers/dl385-gen10

HPE ProLiant DL385 Gen10 Server user documents

https://www.hpe.com/info/dl385gen10-docs

Support and other resources

Accessing Hewlett Packard Enterprise Support

- For live assistance, go to the Contact Hewlett Packard Enterprise Worldwide website:

  https://www.hpe.com/info/assistance

- To access documentation and support services, go to the Hewlett Packard Enterprise Support Center website:

  https://www.hpe.com/support/hpesc

Information to collect

- Technical support registration number (if applicable)
- Product name, model or version, and serial number
- Operating system name and version
- Firmware version
- Error messages
- Product-specific reports and logs
- Add-on products or components
- Third-party products or components

Accessing updates

- Some software products provide a mechanism for accessing software updates through the product interface. Review your product documentation to identify the recommended software update method.
- To download product updates:

  Hewlett Packard Enterprise Support Center

  https://www.hpe.com/support/hpesc

  Hewlett Packard Enterprise Support Center: Software downloads

  https://www.hpe.com/support/downloads

  My HPE Software Center

  https://www.hpe.com/software/hpesoftwarecenter

- To subscribe to eNewsletters and alerts:

  https://www.hpe.com/support/e-updates

- To view and update your entitlements, and to link your contracts and warranties with your profile, go to the Hewlett Packard Enterprise Support Center **More Information on Access to Support Materials** page:

  https://www.hpe.com/support/AccessToSupportMaterials

IMPORTANT: Access to some updates might require product entitlement when accessed through the Hewlett Packard Enterprise Support Center. You must have an HPE Passport set up with relevant entitlements.

Customer self repair

Hewlett Packard Enterprise customer self repair (CSR) programs allow you to repair your product. If a CSR part needs to be replaced, it will be shipped directly to you so that you can install it at your convenience. Some parts do not qualify for CSR. Your Hewlett Packard Enterprise authorized service provider will determine whether a repair can be accomplished by CSR.

For more information about CSR, contact your local service provider.

Remote support

Remote support is available with supported devices as part of your warranty or contractual support agreement. It provides intelligent event diagnosis, and automatic, secure submission of hardware event notifications to Hewlett Packard Enterprise, which will initiate a fast and accurate resolution based on your product's service level. Hewlett Packard Enterprise strongly recommends that you register your device for remote support.

If your product includes additional remote support details, use search to locate that information.

Remote support and Proactive Care information

HPE Get Connected

https://www.hpe.com/services/getconnected

HPE Proactive Care services

https://www.hpe.com/services/proactivecare

HPE Datacenter Care services

https://www.hpe.com/services/datacentercare

HPE Proactive Care service: Supported products list

https://www.hpe.com/services/proactivecaresupportedproducts

HPE Proactive Care advanced service: Supported products list

https://www.hpe.com/services/proactivecareadvancedsupportedproducts

Proactive Care customer information

Proactive Care central

https://www.hpe.com/services/proactivecarecentral

Proactive Care service activation

https://www.hpe.com/services/proactivecarecentralgetstarted

Documentation feedback

Hewlett Packard Enterprise is committed to providing documentation that meets your needs. To help us improve the documentation, send any errors, suggestions, or comments to Documentation Feedback (**docsfeedback@hpe.com**). When submitting your feedback, include the document title, part number, edition, and publication date located on the front cover of the document. For online help content, include the product name, product version, help edition, and publication date located on the legal notices page.