Overview

The HP ProLiant DL580 G5 is the best in class platform for virtualization, combining Intel's newest Xeon® processor technology, maximum scalability and high availability features. This 4-socket server offers unsurpassed flexibility and serviceability in a versatile, 4U rack-optimized form factor. Based on the latest industry standard technologies, the DL580 G5 provides the highest levels of performance demanded by today's compute intensive applications.

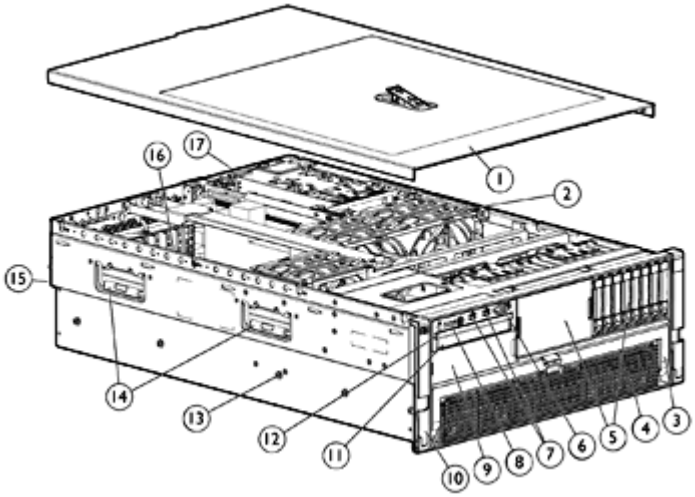

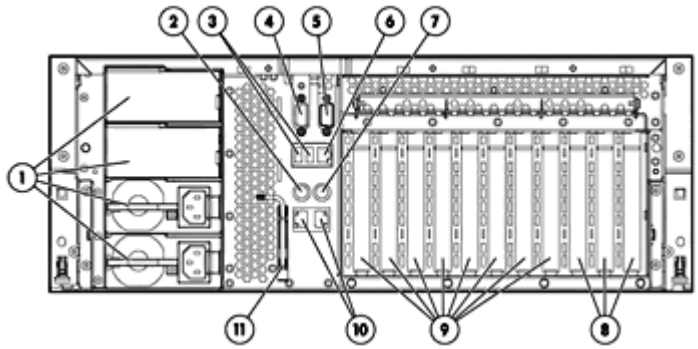

Front View:

1. Quick Removal Access Panel
2. Six Hot Plug Redundant Fans Standard on all models
3. Front accessible Processor and memory drawer
4. Support for up to four Quad-Core Intel® Xeon® Processors
5. Support for up to 16 Small Form-Factor (SFF) SAS or Serial ATA (SATA) drives
6. One front video port
7. Two front accessible USB 2.0 ports
8. Front Panel LED Display and Power Button
9. Half-height tape bay
10. Quick release levers for fast server access
11. Slimline Drive (DVD Drive standard)
12. Slide-out Systems Insight Display
13. Universal Tool-less "Snap In" Sliding Rail Solution
14. Server Lifting Handles
15. 4U (7" Height) Rack Form Factor
16. Up to eleven Available PCI Express/PCI-X Internal Expansion Slots. Eight Standard: (4) full length PCI-E x8, (1) full length PCI-E x4 and (3) half length PCI-Ex4 slots. Optional Expansion for up to (3) PCI-X or (3) PCI-E x8
17. Hot Plug Redundant Power Supplies (two standard with 2P Models, requires four for redundancy)

Rear View:

1. Power supplies (2 ship standard in 2P Models; 4 ship standard in 4P Models)
2. Keyboard port
3. Two USB ports
4. Video port
5. Serial port
6. Integrated Lights-Out 2 port
7. Mouse port
8. PCI-Express or PCI-X option (slots 1-3)
9. PCI-Express slots (slots 4-11)
10. Two Multifunction Gigabit NICs
11. Service tool

What's New

- Optional -48V DC power supply
- New 300GB SFF SAS drives supported

Standard Features

NOTE: For the Standard Features shipped in the "Factory Integrated Models", please see the "Configuration Information - Factory Integrated Models" section.

Processor One or more of the following depending on model	Six-Core Processors 6-Core Intel® Xeon® X7460 Processor (2.67 GHz, 16MB cache, 130Watts) 6-Core Intel® Xeon® L7455 Processor (2.13 GHz, 12MB cache, 65Watts) 6-Core Intel® Xeon® E7450 Processor (2.40 GHz, 12MB cache, 90 Watts) Quad-Core Processors Quad-Core Intel® Xeon® E7440 Processor (2.40 GHz, 16MB cache, 90 Watts) Quad-Core Intel® Xeon® E7430 Processor (2.13 GHz, 12MB cache, 90 Watts) Quad-Core Intel® Xeon® E7420 Processor (2.13 GHz, 8MB cache, 90 Watts) Quad-Core Intel® Xeon® X7350 Processor (2.93 GHz, 2x4M cache,130 Watts) Quad-Core Intel® Xeon® E7340 Processor (2.40 GHz, 2x4M cache, 80 Watts) Quad-Core Intel® Xeon® E7330 Processor (2.40 GHz, 2x3M cache, 80 Watts) Quad-Core Intel® Xeon® E7320 Processor (2.13 GHz, 2x2M cache, 80 Watts) Quad-Core Intel® Xeon® E7310 Processor (1.60 GHz, 2x2M cache, 80 Watts) Quad-Core Intel® Xeon® L7345 Processor (1.86 GHz, 2x4M cache, 50 Watts) Dual-Core Processors Dual-Core Intel® Xeon® E7220 Processor (2.93 GHz, 2x4M cache, 80 Watts) NOTE: Intel Core™ Microarchitecture with Intel Virtualization Technology FlexMigration.
Cache Memory One or more of the following depending on model	16MB (1 x 16MB) Level 3 cache 12MB (1 x 12MB) Level 3 cache 8MB (1 x 8MB) Level 3 cache 8MB (2 x 4MB) Level 3 cache
Chipset	Industry Standard Intel® 7300 Chipset with four high-speed interconnects at 1066 MT/s NOTE: For more information regarding Intel chipsets, please see the following URL: http://www.intel.com/products/server/chipsets/
Upgradeability	Upgradeable to quad (4) processors NOTE: To upgrade from 2P to 4P CPU/Memory secondary option kit needs to be bought separately. Exact part number is mentioned in the options section. 4P models already have this kit configured.
Memory Protection	Advanced ECC Mirrored Memory Online Spare Memory

Standard Features

Memory One of the following depending on Model	Type	PC2-5300 Fully Buffered DIMMs (DDR2-667)
	Standard (2P Base Models)	4 GB (4x 1 GB)
	Standard (4P Base Models)	8 GB (4 x 2 GB)
	Standard (4P High Performance Models)	16 GB (8 x 2 GB)
	Maximum	256 GB

NOTE: 256 GB achieved with use of four memory cartridges and (32) 8 GB Memory Modules.

Network Controller Two embedded NC373i Multifunction Gigabit Network Adapters with TCP/IP Offload Engine, including support for Accelerated iSCSI through an optional ProLiant Essentials Licensing Kit

Expansion Slots

NOTE: More PCI-Express slots with up to eleven available with option card. Eight slots standard: (4) full length PCI-E x8, (1) full length PCI-E x4 and (3) half length PCI-E x4 slots; Optional card adds (3) PCI-X or (3) PCI-E x8.

Expansion Slots with No Option Card	Expansion Slot #	Technology	Width	Connector Width*	Bus Number**	Form Factor	Notes
	1	N/A	N/A	N/A	N/A	N/A	N/A
	2	N/A	N/A	N/A	N/A	N/A	N/A
	3	N/A	N/A	N/A	N/A	N/A	N/A
	4	PCI Express	x8	x16	12h	FH/FL	
	5	PCI Express	x8	x16	12h	FH/FL	
	6	PCI Express	x8	x16	12h	FH/FL	
	7	PCI Express	x8	x16	24h	FH/FL	
	8	PCI Express	x4	x8	24h	FH/FL	
	9	PCI Express	x4	x8	24h	LP	
	10	PCI Express	x4	x8	24h	LP	
	11	PCI Express	x4	x8	24h	LP	

* Default bus assignment. Inserting cards with PCI bridges may alter the actual bus assignment number.
** Slots are enumerated differently based on OS. MS OS's enumerate from lowest to highest Device ID by bus (starting with the lowest bus).
FL= Full length; FH = Full height; LP = low-profile.

Standard Features

Expansion Slots							
Expansion Slots with PCI-X Option Card	Expansion Slot #	Technology	Width	Connector Width*	Bus Number**	Form Factor	Notes
	1	PCI-X	64-bit	N/A	41h	FH/FL	100MHz
	2	PCI-X	64-bit	N/A	41h	FH/FL	100MHz
	3	PCI-X	64-bit	N/A	41h	FH/FL	100MHz
	4	PCI Express	x8	x16	12h	FH/FL	
	5	PCI Express	x8	x16	12h	FH/FL	
	6	PCI Express	x8	x16	12h	FH/FL	
	7	PCI Express	x8	x16	24h	FH/FL	
	8	PCI Express	x4	x8	24h	FH/FL	
	9	PCI Express	x4	x8	24h	FH/FL	
	10	PCI Express	x4	x8	24h	LP	
	11	PCI Express	x4	x8	24h	LP	

* Default bus assignment. Inserting cards with PCI bridges may alter the actual bus assignment number.
** Slots are enumerated differently based on OS. MS OS's enumerate from lowest to highest Device ID by bus (starting with the lowest bus).
FL= Full length; FH = Full height; LP = low-profile.

Expansion Slots							
Expansion Slots with PCI Express x8 Card	Expansion Slot #	Technology	Width	Connector Width*	Bus Number**	Form Factor	Notes
	1	PCI Express	x8	x16	42h	FH/FL	
	2	PCI Express	x8	x16	42h	FH/FL	
	3	PCI Express	x8	x16	42h	FH/FL	
	4	PCI Express	x8	x16	12h	FH/FL	
	5	PCI Express	x8	x16	12h	FH/FL	
	6	PCI Express	x8	x16	12h	FH/FL	
	7	PCI Express	x8	x16	24h	FH/FL	
	8	PCI Express	x4	x8	24h	FH/FL	
	9	PCI Express	x4	x8	24h	LP	
	10	PCI Express	x4	x8	24h	LP	
	11	PCI Express	x4	x8	24h	LP	

* Default bus assignment. Inserting cards with PCI bridges may alter the actual bus assignment number.
** Slots are enumerated differently based on OS. MS OS's enumerate from lowest to highest Device ID by bus (starting with the lowest bus).
FL= Full length; FH = Full height; LP = low-profile.

Standard Features

Storage Controller
One of the following depending on Model

2P Base Models	HP Smart Array P400i/256 MB Controller
4P Base Models	HP Smart Array P400i/512 MB BBWC Controller

The Battery-Backed Write Cache (BBWC) Enabler for the Smart Array P400i Controller protects up to 512-MB write cache memory from hard boot, power, controller, or system board failures.

- Standard on 4P Base Models, optional with others
- Battery charge/life: Up to 72 hours/3 years
- Transportable data protection
- Increases overall controller performance

Storage

Diskette Drive	None
Optical Drive	Slimline DVD Drive standard
Hard Drives	None ship standard
Hard Disk Drive Backplane	Internal SAS backplane supports up to eight SFF hard disk drives. Optional second SAS backplane supports additional eight SFF hard drives.

Maximum Internal Storage

Hot Plug SFF SAS	8.0TB	16 x 500GB
Hot Plug SFF SATA	8.0TB	16 x 500GB

Interfaces

Serial	1
Video	1 front; 1 rear
Network RJ-45	2
iLO2 Remote Management	1
Keyboard	1
Pointing Device (Mouse)	1
USB 2.0 Ports	5 total: 2 front; 2 rear; 1 internal NOTE: Please see the following URL for additional information regarding USB support: http://h18004.www1.hp.com/products/servers/platforms/usb-support.html

Industry Standard Compliance

ACPI 2.0. Compliant
PCIE 1.0a Compliant
PXE Support
WOL Support
Physical Address Extension (PAE) Support
Microsoft® Logo certifications
USB 2.0 Support

Standard Features

Server Power Cords	NOTE: If customers require a local power cord, they can check the power cord matrix for the appropriate county specific sku. Please see the following power cord matrix for details: http://www.hp.com/go/powercordmatrix
Power Supply	HP 1200W 12V Hot plug AC Power Supply NOTE: Two Hot Plug Power Supplies ships standard with 2P Base Models (optional Redundant Hot Plug Power Supply Option Kit). Four Hot Plug Power Supplies ship standard with 4P Base Models. Configurations with 3 or 4 processors that will use lowline (110V) input power require four Hot Plug Power Supplies. Power Supply Requirement Override NOTE: Customers unable to support four power supply configurations may be power redundant with two power supplies. HP has implemented a selection in ROM set up (RBSU) that lets the customer that has verified their two supply configuration is redundant. To make sure you select the correct power supply to meet your configuration, we suggest that you use the HP Power Advisor (www.hp.com/go/hppoweradvisor) to decide the "Right-Size" for your configuration.
System Fans	6 Hot plug, redundant fans (individually removable) ship standard
Required Cabling	For required cabling information, refer to the HP Web site at: www.hp.com/servers/dl580.
Operating Systems and Virtualization Software Support for ProLiant Servers	Microsoft Windows Server Microsoft Windows Server Hyper V Red Hat Enterprise Linux (RHEL) SUSE Linux Enterprise Server (SLES) Oracle Enterprise Linux (OEL) NetWare VMware Citrix Essentials for XenServer NOTE: For more information on HP's Certified and Supported ProLiant Servers for OS and Virtualization Software and latest listing of software drivers available for your server, please visit our Support Matrix at: http://www.hp.com/go/ossupport and our driver download page www.hp.com/support/DL580G5.
Graphics	Integrated ATI ES1000 with 32MB embedded video SDRAM Max Resolution 1280 x 1024 x 16M color
Form Factor	Rack (4U = 7 inches), ships with Quick Deploy Sliding Rail System, an ambidextrous cable management arm and quick release levers for fast and easy serviceability and in-rack tool-less access to major components. Space saving form factor (4U) provides space efficiencies while providing maximum deployment flexibility.

Standard Features

HP Insight management software	HP Insight Foundation	Managing the growing number of servers can be complex and expensive for your organization. IT managers need to address changing business needs with tools that meet the challenges of managing today's complex Datacenters. HP provides management solutions that are designed to simplify a server's installation, configuration and maintenance throughout the entire server lifecycle. This provides the customer with higher levels of operational efficiency and highly reliable systems: www.hp.com/go/foundation. The foundation pack includes: • HP SmartStart • HP Management DVD • HP ProLiant Smart Update Firmware DVD SmartStart version supported (minimum): SmartStart 7.91. http://www.hp.com/servers/smartstart NOTE: In an effort to support reducing our environmental impact, the HP Insight Foundation Suite for ProLiant media will be available as a selectable option for this server at time of order of a CTO SKU. This will allow customers to order the number of media kits that best meet their needs and eliminate receiving unnecessary duplicate media.
	HP Integrated Lights-Out (iLO)	HP Integrated Lights-Out (iLO) simplifies server setup, health monitoring, power and thermal control, and lights-out remote administration of ProLiant ML, DL, and BL servers. HP iLO functions without additional software and can be accessed from any location via a web browser. HP iLO works hand-in-hand with HP Systems Insight Manager, Insight Control, and Insight Dynamics for ProLiant, helping customers unleash the value of the ProLiant platform and deliver the highest possible quality of IT service. For more information, visit: www.hp.com/go/iLO

Intelligent Manageability	HP Systems Insight Manager SmartStart Redundant ROM Remote Flash ROM Management Agents Integrated Management Log (IML) Automatic Server Recovery-2 (ASR-2) ROM-Based Setup Utility (RBSU) Dynamic Sector Repairing (with Smart Array Controllers) Drive Parameter Tracking (with Smart Array Controllers) Pre-Failure Warranty (covers processors, SAS hard drives and memory) Redundant/adaptive load balancing NIC Support Hot Spare Boot NOTE: Upon the event of a failed processor or Processor Power Module (PPM) in a multi-processing environment, the system will automatically reboot and use the remaining good processor(s).

Standard Features

Security	Power-on password Keyboard password External USB port enable/disable Network Server Mode Serial interface control Administrator's password Removable CD-ROM or DVD drive

Warranty	This product is covered by a global limited warranty and supported by HP Services and a worldwide network of HP Authorized Channel Partners resellers. Hardware diagnostic support and repair is available for three years from date of purchase. Support for software and initial setup is available for 90 days from date of purchase. Enhancements to warranty services are available through HP Care Pack services or customized service agreements. Hard drives have either a one year or three year warranty; refer to the specific hard drive QuickSpecs for details. NOTE: Server Warranty includes 3-Year Parts, 3-Year Labor, 3-Year Onsite support with next business day response. Warranty repairs may be accomplished through the use of Customer Self Repair (CSR) parts. These parts fall into two categories: 1) Mandatory CSR parts are designed for easy replacement. A travel and labor charge will result when customers decline to replace a Mandatory CSR part; 2) Optional CSR parts are also designed for easy replacement but may involve added complexity. Customers may choose to have HP replace Optional CSR parts at no charge. Additional information regarding worldwide limited warranty and technical support is available at: http://h18004.www1.hp.com/products/servers/platforms/warranty/index.html

Optional Features

HP Insight management software	HP Insight Control	HP Insight Control, a product option, delivers essential infrastructure management that can help save time and money by making it easy to deploy, migrate, monitor, remote control, and optimize your IT infrastructure through a single, simple management console. Two versions of Insight Control are available, to serve environments requiring either a Linux-based or a Windows-based central management server: HP Insight Control for Linux, and HP Insight Control. See www.hp.com/go/insightcontrol HP Insight Control includes one year of 24 x 7 HP Software Technical Support and Update Service ensuring rapid access to HP support staff and proactive delivery of software updates. For more information about this service, please visit: http://www.hp.com/services/insight.
	HP Insight Dynamics for ProLiant	HP Insight Dynamics for ProLiant, a product option, is an integrated command center that enables IT Staff personnel to continuously analyze and optimize a converged infrastructure, while automating and reducing the cost of common data center tasks by as much as 40 percent. As a powerfully integrated by design toolkit to accelerate complex technology projects and simplify daily operations that ultimately enable IT Staff personnel to dynamically keep pace with the organizations changing business requirements. It enables them to plan capacity and power continuously, balance across physical and virtual resources, and ensure cost-effective high availability. It also enables IT organizations to provision infrastructure consistently and automatically from pools of shared resources using a self-service portal. Resources provisioned can range from a single virtual machine to complex multi-tier environments and their associated physical and virtual resource requirements. In addition to the previous functional benefits, it also provides a cost-effective disaster recovery for physical and virtual environments that works with HP StorageWorks Continuous Access software for both the Enterprise Virtual Array and the XP storage array allowing application environments to be reactivated in minutes with the touch of a button to a remote location. NOTE: For more information, visit: http://www.hp.com/go/insightdynamics

Solutions

The ProLiant DL580 G5 server is an enterprise class, 4 socket server designed for maximum scalability and high availability. Its innovative chassis offers unsurpassed flexibility and serviceability in a versatile form factor. Based upon the latest industry standard processing, memory, I/O and networking technologies, the ProLiant DL580 G5 provides the highest levels of performance demanded by today's compute intensive applications. Unparalleled high availability features, including hot-plug and redundant components, guarantee maximum uptime. Integrated Lights-Out 2 (iLO2) technology allows remote administration from a standard web browser without ever having to visit the server. Within the 4U dense form factor, it's highly expandable architecture provides maximum application deployment flexibility with the ability to add PCI-Express, PCI-X or battery-backed write cache options. Innovative features, such as the ability to access processors, memory, hard drives, and power supplies while the unit remains secured in the rack, enable rapid response to service events, radically decreasing overall IT costs and server downtime.

Typical Usage:
Space-constrained corporate data centers and service providers

- With up to 4 TB of internal storage, 32 DIMM sockets and PCI-Express or PCI-X options; the HP ProLiant DL580 G5 packs the storage, memory, and I/O you need in a versatile, 4U chassis
- Ambidextrous cable management and a quick deploy rail solution make racking a snap
- Availability features including hot plug redundant power, hot plug redundant fans, and hot plug RAID hard drives keep environments up and running and users productive

Database, Messaging and Business Applications

- The latest Intel® Xeon® processors with FBDIMMs and large internal storage capacity provide scalability for everything from web apps to mail servers to databases
- Eight standard PCI-Express slots and the ability to add either three additional x8 PCI Express or three PCI-X slots, provide powerful and flexible I/O alternatives
- Two integrated multi-function gigabit NICs give you the connectivity and bandwidth needed in today's database or business applications environments
- Easily attach to SAN or NAS and manage from one location

Server Consolidation

- Scalability, availability and built-in serviceability make the HP ProLiant DL580 G5 the perfect platform for server consolidation solutions
- The ProLiant HP DL580 G5 and ProLiant Essentials make it easy to deploy, manage, and migrate virtualized servers with VMware or Microsoft Virtual Server
- Integrated Lights-Out 2 enables administrators to manage the HP ProLiant DL580 G5 from remote locations

For more solutions visit: http://www.hp.com/solutions/proliantdl580.

Optional Features

Factory Express Portfolio for Servers and Storage	HP Factory Express offers configuration, customization, integration and deployment services for HP servers and storage products. Customers can choose how their factory solutions are built, tested, integrated, shipped and deployed. Factory Express offers service packages for simple configuration, racking, installation, complex configuration and design services as well as individual factory services, such as image loading, asset tagging, and custom packaging. HP products supported through Factory Express include a wide array of servers and storage: HP Integrity, HP ProLiant, HP ProLiant Server Blades, HP BladeSystem, HP 9000 servers as well as the MSAxxxx, VA7xxx, EVA, XP, rackable tape libraries and configurable network switches. For more information on Factory Express services for your specific server model please contact your sales representative or go to: http://www.hp.com/go/factory-express.
HP Enterprise Configurator	The HP eConfigure-Enterprise Configurator now provides factory default racking for our HP hardware portfolio. This approach is aligned with our strategic direction to meet the needs and expectations of our valued customers. If you require "custom" rack configuration, please contact HP's Customer Business Center or an Authorized Partner for assistance. http://www.hp.com/products/configurator.

Service and Support

For increased uptime, productivity and ROI - HP Care Pack packaged services for Servers

These days, you need to get the most out of your server investment - you can't afford not to. When you buy HP server products and solutions, it's also a good time to think about what levels of service and support you may need. To help take the worry out of deploying, designing, maintaining, and managing your environment, we've designed a portfolio of service options that are as: flexible, reliable and scalable as your server. Unlike server-only vendors, we take a holistic approach to your entire environment, bridging storage, servers, blades, software and network infrastructures with our HP Care Pack packaged services for Servers.

Protect your business beyond the warranty

When it comes to robustness and reliability, standard warranties on today's computing equipment have matured just as the technologies have matured. Good news on some fronts - but also a source of potential problems and subsequent consequences that come from depending on standard warranties alone. Standard warranty protects against product defects and some causes of downtime - but not the business. By using a standard approach to warranty uplifts, such as HP Care Pack Services, you can reduce downtime risks and be more certain of operational consistency for both mission-critical and standard business computing. Simply put, HP Care Pack Services normalize the warranty of combined products - helping you proactively guard against unplanned downtime.

Extending warranties with HP Care Pack Services

For cost-effective upgrading or extending your standard warranty, HP Care Pack Services offer a suite of standard reactive hardware and software support services that are sold separately, or combined as with our Support Plus and Support Plus 24 services. The portfolio also provides a combination of proactive and reactive services, such as Proactive 24 Service and Critical Service. In addition, with HP Proactive Select we offer an innovative approach to service delivery that gives you the flexibility to acquire the specific proactive services you need today, then add services as your needs evolve. HP Proactive Select offers a broad set of technical or per-event type service options - including server, storage, and network, SAN device, and software, environment, installation and education services. Services that you can mix and match depending on your specific requirements, from preliminary planning and equipment delivery to installation, configuration, integration, and testing, through every level of ongoing support. Our HP Care Pack packaged services for Servers assures help when you need it most. And for many products, post-warranty HP Care Pack Services are available when your original warranty has expired.

HP Server Services: Offering reliability, flexibility and value - just like your storage

HP Server Services offers a full spectrum of customer care, from technology support to complex migrations to complete completely managed services. HP Factory Express provides customization, integration and deployment services for turnkey solutions. HP Education offers flexible, comprehensive training on server networking and server software to help your IT staff get the most out of your investments. And HP Financial solutions extend innovative financing and asset management programs to cost-effective buy, manage and eventually retire your older equipment.

HP Server Services, the trusted business technology experts who manage your technology in action, because when technology works, business works. http://www.hp.com/services/servers, http://www.hp.com/services/storage

NOTE: Care Pack Services availability may vary by product and country.

HP Care Pack Services are sold by HP and HP Authorized Service Partners:

- Services for customers purchasing from HP or an enterprise reseller are quoted using HP order configuration tools.
- Customers purchasing from a commercial reseller can find HP Care Pack Services at: http://www.hp.com/go/lookuptool

Recommended HP Care Pack Services for optimal satisfaction with your HP product

Recommended Services

Hardware Support - 3-Year HP 24x7 6-hour call to repair Care Pack

3-Year HP 24x7 6-hour call to repair Care Pack - This cost-effective service helps you minimize system downtime due to hardware failure. It features a commitment to resolve hardware problems within 6 hours from the time your service call is received. (Please note repair-time restrictions below.)

When you experience system problems, your call is immediately connected to an HP-certified resolution engineer for troubleshooting. If your problem cannot be resolved remotely, an experienced support professional is dispatched to your site to begin hardware repair activities.

Service feature highlights

- Remote monitoring and problem diagnosis and support
- Onsite hardware support
- 6-hour call-to-repair time commitment
- Materials included
- Enhanced parts inventory management
- 24x7 coverage window
- Work to completion
- Escalation management

http://h20195.www2.hp.com/V2/GetPDF.aspx/5981-6636ENN

Hardware Support - 3 - Years 24x7 24 hour Call-to-Repair

3-Year HP 24x7 24-hour call to repair Care Pack - This cost-effective service helps you minimize system downtime due to hardware failure. It features a commitment to resolve hardware problems within 6 hours from the time your service call is received. (Please note repair-time restrictions below.)

When you experience system problems, your call is immediately connected to an HP-certified resolution engineer for troubleshooting. If your problem cannot be resolved remotely, an experienced support professional is dispatched to your site to begin hardware repair activities.

ProLiant Servers Installation and Startup Service

HP Installation and Startup of HP ProLiant Servers provides for the installation of your new HP ProLiant server and operating system. This will assist you in bringing your new HP ProLiant server and operating system into operation in a timely and professional manner.
Service benefits
This service provides a trained HP service specialist to perform an installation that meets HP quality standards, for:

- Delivery of the service at a mutually scheduled time convenient to your organization
- Availability of an HP service specialist to answer basic questions during the onsite delivery of this service
- Custom installation as detailed in "Delivery specifications" or in a Statement of Work (SOW)

- Verification prior to installation that all service prerequisites are met

Service benefits
This service provides a trained HP service specialist to perform an installation that meets HP quality standards, for:

- Delivery of the service at a mutually scheduled time convenient to your organization
- Availability of an HP service specialist to answer basic questions during the onsite delivery of this service
- Custom installation as detailed in "Delivery specifications" or in a Statement of Work (SOW)
- Verification prior to installation that all service prerequisites are met

http://h20195.www2.hp.com/V2/GetPDF.aspx/5982?7572ENN

Optional HP Care Pack Services that will enhance your HP product experience

Optional Services

3-Year HP Support Plus 24 Service Care Pack

As an alternative to our recommended support level, for customers who need access to responsive 24x7 hardware and software support plus software updates on HP and selected third party products:

HP Support Plus 24 helps you increase performance and availability with comprehensive, consistent hardware and software services. Working with your IT team, HP Services engineers deliver onsite hardware support and over-the-phone software support around-the-clock 365 days per year. Service coverage encompasses HP products and selected multi-vendor hardware and software.

In addition, this convenient HP Care Pack packaged service makes software updates available to you at substantial savings.

Choose Support Plus 24 when you need to:

- Improve uptime with responsive hardware and software services available anytime
- Cost-effectively obtain expert 24x7 multi-vendor hardware and software support
- Enjoy consistent service coverage across geographically dispersed sites
- Update HP and selected third-party software at a predictable cost
- Take advantage of subscription savings on software updates

http://h20195.www2.hp.com/V2/GetPDF.aspx/5981-6638EEE

3 Year HP Proactive 24

As an alternative to our recommended support level, for customers who want enhanced operational effectiveness and proactive problem identification:

HP Proactive 24 Service (P24) integrates hardware and software support to help you improve the stability and operational effectiveness of your IT environment. An HP Account Manager acts as your primary point of contact to ensure that HP meets your support needs effectively.

P24 provides the maximum value when multiple technologies in the environment (e.g. servers, storage, SAN and the network), are all covered. It provides an environment-wide view and consistent support of all of these components which affect stability of your key applications.

Choose P24 when you want to:

- enhance operational effectiveness with proactive problem identification and recommendations from HP
- partner with technical experts who help coordinate support, provide hands-on assistance, and share knowledge with your staff
- rapidly access support and expertise spanning your environment
- obtain personalized services tailored to your business environment and critical success factors
- anticipate necessary change - and execute it correctly the first time
- efficiently manage infrastructure resources to meet your performance objectives

http://h20195.www2.hp.com/V2/GetPDF.aspx/4AA0-1614ENUC

Hardware Support - 3-Year, 24x7 Same-Business-Day, On-site. 4-Hour response coverage
As an alternative to our recommended support level, for customers who need same day response service level 24x7.

3-Year, 24x7 Same-Business-Day, On-site. 4-Hour response coverage provides high-quality remote assistance and onsite support for
your covered hardware, helping you to improve product uptime. You have the flexibility to choose between different service-level options featuring different response times and coverage windows, as well as between several coverage periods to address your specific service needs.
Service benefits

- Help improve or maintain system uptime
- Convenient onsite support
- Reliable response times
  Service feature highlights
- Remote problem diagnosis and support
- Onsite hardware support
- Materials included
- Service-level options with different coverage windows and response times
- Work to completion
- Escalation management
- Access to electronic support information and services
- HP electronic remote monitoring and support solution (for eligible products only)
- Optional Defective Media Retention Service

http://h20195.www2.hp.com/V2/GetPDF.aspx/5982-6547EEE

eSupport

HP eSupport is a portfolio of technology-based services that assist you with managing your business environment - from the desktop to the data center.

Support Portal

The HP support portal provides one-stop access to the information, tools and services you need to manage the daily operations of your IT environment.

Features include:

- Access to self-solve tools (including search technical knowledge base)
- Efficient logging and tracking of support cases
- Collaboration with other business and IT professionals
- Download of patches and drivers
- Access to diagnostic tools
- Proactive notification of relevant information

Access to certain features of the support portal requires an HP service agreement. To access the support portal, visit: http://www.hp.com/support

HP Insight Remote Support software delivers secure remote support for your HP Servers and Storage, 24 X 7, so you can spend less time solving problems and more time focused on your business. You can have your systems remotely monitored for hardware failure using secure technology that's been proven at thousands of companies around the world. In many cases, you can avoid problems before they occur.

Pre-configured Models

NOTE: For the Standard Features shipped in the "Factory Integrated Models", please see the "Configuration Information - Factory Integrated Models" section.
NOTE: Pre-configured models ship with the configurations below. Options can be selected from the Core or Additional options section of this QuickSpecs.
NOTE: HP does not allow factory integration of options into pre-configured models. Any additional options purchased will be shipped separately.
NOTE: If you desire a custom configuration please see "Configuration Information - Factory Integrated Models" section of this QuickSpecs.
NOTE: Not all models are available in all regions. Check with your local country HP offices for availability.

HP DL580 G5 High Performance Models HP DL580 G5 X7460 16GB 4P 487362-xx1 HP DL580 G5 E7450 8GB 4P 487363-xx1 HP DL580 G5 E7440 8GB 4P 487364-xx1	Processor(s) Four of the following depending on model	(4) 6-Core Intel® Xeon® X7460 Processor (2.67GHz, 16MB L3 cache, 130 Watts) (4) 6-Core Intel® Xeon® E7450 Processor (2.40GHz, 12MB L3 cache, 90 Watts) (4) 4-Core Intel® Xeon® E7440 Processor (2.40GHz, 16MB L3 cache, 90 Watts)
	Cache Memory One of the following depending on model	16MB (1 x 16MB) L3 cache 12MB (1 x 12MB) L3 cache
	Memory	X7460 models: 16 GB PC2-5300 Fully Buffered DIMMs (DDR2-667) All others: 8 GB PC2-5300 Fully Buffered DIMMs (DDR2-667) NOTE: Memory expansion boards option required to configure up to 256 GB using 8 GB DIMMs
	Network Controller	Two embedded NC373i Multifunction Gigabit Server Adapters
	Storage Controller	HP Smart Array P400i/512 MB BBWC Controller
	Hard Drives	None ship standard
	Internal Storage	8TB max (with optional 500GB SFF SATA hot-plug hard drives)
	Optical Drive	Slimline DVD Drive standard
	Power Supplies	Four Power Supplies standard (third and fourth power supplies for redundancy)
	Optical Drive	Slimline DVD
	Fans	6 Hot plug, redundant fans (individually removable) ship standard
	Integrated Lights Out	HP Integrated Lights-Out 2 management processor: Integrated on system board
	Form Factor	Rack 4U
	Warranty	Server Warranty includes 3-Year Parts, 3-Year Labor, 3-Year Onsite support with next business day response.

Pre-configured Models

HP DL580 G5 Base Models HP DL580 G5 E7430 4GB 2P 487365-xx1 HP DL580 G5 E7420 4GB 2P 487366-xx1	Processor(s) Two of the following depending on model Up to 4 supported	(2) 4-Core Intel® Xeon® E7430 Processor (2.13GHz, 12MB L3 cache, 90 Watts) (2) 4-Core Intel® Xeon® E7420 Processor (2.13GHz, 8MB L3 cache, 90 Watts)
	Cache Memory One of the following depending on model	12MB (1 x 12MB) L3 cache 8MB (1 x 8MB) L3 cache
	Memory	4 GB PC2-5300 Fully Buffered DIMMs (DDR2-667) (Standard) to 256 GB (Maximum) NOTE: Memory expansion boards option would be required to configure up to 256 GB using 8 GB DIMMs
	Network Controller	Two embedded NC373i Multifunction Gigabit Server Adapters
	Storage Controller	HP Smart Array P400i/256 MB Controller
	Hard Drives	None ship standard
	Internal Storage	Up to sixteen (16) small form factor SAS/SATA hot-plug hard drive bays
	Optical Drive	Slimline DVD Drive standard
	Power Supply	Two power supplies standard (third and fourth power supplies optional for redundancy)
	Fans	6 Hot plug, redundant fans (individually removable) ship standard
	Integrated Lights Out	HP Integrated Lights-Out 2 management processor: Integrated on system board
	Form Factor	Rack 4U
	Warranty	Server Warranty includes 3-Year Parts, 3-Year Labor, 3-Year Onsite support with next business day response.

Country Code Key	xx=00	US
	xx=20	Brazil
	xx=29	Japan
	xx=37	APD
	xx=42	Europe
	xx=AA	PRC

NOTE: This section lists some of the steps required to configure a Factory Integrated Model. To ensure only valid configurations are ordered, HP recommends the use of an HP approved configurator. Contact your local sales representative for information on configurable product offerings and requirements.
NOTE: Configure-to-order (CTO) servers must start with a CTO Chassis.
NOTE: FIO indicates that this option is only available as a factory installable option.

Step 1: Base Configuration

HP Models	HP ProLiant DL580 G5 highly serviceable rack chassis NOTE: 487381-B21 is for use when configuring the DL580 with 7400 series processors.	487381-B21
	HP ProLiant DL580 G5 highly serviceable tower chassis	502550-B21
	Factory Integrated Model ships with:	
	Two embedded NC373i Multifunction Gigabit Server Adapters	
	Eight standard PCI-express slots	
	HP Smart Array P400i Controller	
	Two hot-plug power supplies with two high-line IEC power cords	
	Six (6) redundant hot-plug fans	
	SFF SAS/SATA drive cage	
	HP Integrated Lights-Out 2 management processor: integrated on system board tower or rack (4U), 7-inch	

Step 2: Choose Required Options (only one of the following from each list unless otherwise noted)

HP Processors	Intel® Xeon® X7460 2.67GHz Hexa Core 16MB DL580 G5 Factory Integrated Processor Option Kit NOTE: If more than one processor is desired, additional processor selections would be 487373-B21.	487373-L21
	HIntel® Xeon® L7445 2.13GHz Six Core 12MB DL580 G5 Factory Integrated Processor Option Kit NOTE: If more than one processor is desired, additional processor selections would be 506157-B21.	506157-L21
	Intel® Xeon® E7450 2.4GHz Hexa Core 12MB DL580 G5 Factory Integrated Processor Option Kit NOTE: If more than one processor is desired, additional processor selections would be 487375-B21.	487375-L21
	Intel® Xeon® E7440 2.4GHz Quad Core 16MB DL580 G5 Factory Integrated Processor Option Kit NOTE: If more than one processor is desired, additional processor selections would be 487377-B21.	487377-L21
	Intel® Xeon® E7430 2.13GHz Quad Core 12MB DL580 G5 Factory Integrated Processor Option Kit NOTE: If more than one processor is desired, additional processor selections would be 487378-B21.	487378-L21

	Intel® Xeon® E7420 2.13GHz Quad Core 8MB DL580 G5 Factory Integrated Processor Option Kit NOTE: If more than one processor is desired, additional processor selections would be 487380-B21.	487380-L21
HP Memory	HP 2GB Fully Buffered DIMM PC2-5300 2x1GB DDR2 Memory Kit	397411-B21
	HP 2GB Fully Buffered DIMM PC2-5300 2x1GB Low Power DDR2 Memory Kit	461826-B21
	HP 4GB Fully Buffered DIMM PC2-5300 2x2GB DDR2 Memory Kit	397413-B21
	HP 4GB Fully Buffered DIMM PC2-5300 2x2GB Low Power DDR2 Memory Kit	461828-B21
	HP 8GB Fully Buffered DIMM PC2-5300 2x4GB DDR2 Memory Kit	397415-B21
	HP 8GB Fully Buffered DIMM PC2-5300 2x4GB Low Power DDR2 Memory Kit	466440-B21
	HP 16GB Fully Buffered DIMM PC2-5300 2x8GB DDR2 Memory Kit	413015-B21
	HP 64GB Fully Buffered DIMM PC2-5300 8x8GB DDR2 Memory Kit	495604-B21
	NOTE: Memory Option Kits include Low Power DIMMs. For more information on ProLiant Energy Efficient Features, please visit: http://h18004.www1.hp.com/products/servers/platforms/energyefficient/.	
HP Storage Controllers	Optional Upgrades	
	HP 512MB w/Battery Smart Array Battery Back Write Cache Enabler	405148-B21
	HP Smart Array P400 256MB FIO Cache Module NOTE: Supports Smart Array P400 Controller and Smart Array P400i Controller only.	405139-B21

Step 3: Choose Additional Options for Factory Integration

NOTE: For additional options, please refer to the "Core Options" and "Additional Options" section below.

Core Options

NOTE: Some options may not be integrated at the factory. To ensure only valid configurations are ordered, HP recommends the use of an HP approved configurator. Contact your local sales representative for additional information.

HP Unique Options	DL580 G5 tower kit	453744-B21
	DL580 G5 SAS SFF 8-bay drive cage option NOTE: This option provides an additional 8 SFF drives for the DL580G5. This option requires an additional storage controller.	452180-B21
	PCI Express x8 3-slot option card NOTE: Adds three PCI Express (X8) I/O slots.	452181-B21
	PCI-X 3-slot option card NOTE: Adds three PCI-X I/O slots (2 64bit 100MHz slots, and 1 64bit 133MHz slot)	452182-B21
	DL580 G5 Memory expansion boards option NOTE: This option consists of 4 memory expansion boards with 4 DIMM sockets each for a total of 16 additional DIMM sockets. This brings the DL580G5 to a total of 32 DIMM sockets.	452179-B21
HP Processors	Six-Core Processors	
	HP DL580 G5 Intel® Xeon® X7460 (2.67GHz/6-core/16MB/130W) Processor Kit	487373-B21
	HP DL580 G5 Intel® Xeon® L7445 (2.13GHz/6-core/12MB/50W) Processor Kit	506157-B21
	HP DL580 G5 Intel® Xeon® E7450 (2.40GHz/6-core/12MB/90W) Processor Kit	487375-B21
	Quad-Core Processors	
	HP DL580 G5 Intel® Xeon® E7440 (2.40GHz/4-core/16MB/90W) Processor Kit	487377-B21
	HP DL580 G5 Intel® Xeon® E7430 (2.13GHz/4-core/12MB/90W) Processor Kit	487378-B21
	HP DL580 G5 Intel® Xeon® E7420 (2.13GHz/4-core/8MB/90W) Processor Kit	487380-B21
	HP DL580 G5 Intel® Xeon® X7350 (2.93GHz/4-core/8MB/130W) Processor Kit	451999-B21
	HP DL580 G5 Intel® Xeon® E7340 (2.40GHz/4-core/8MB/80W) Processor Kit	438090-B21
	HP DL580 G5 Intel® Xeon® E7330 (2.40GHz/4-core/6MB/80W) Processor Kit	438091-B21
	HP DL580 G5 Intel® Xeon® E7320 (2.13GHz/4-core/4MB/80W) Processor Kit	438092-B21
	HP DL580 G5 Intel® Xeon® E7310 (1.60GHz/4-core/4MB/80W) Processor Kit	438093-B21
	HP DL580 G5 Intel® Xeon® L7345 (1.86GHz/4-core/8MB/50W) Processor Kit	438100-B21
	Dual-Core Processors	
	HP DL580 G5 Intel® Xeon® E7220 (2.93GHz/2-core/8MB/80W) Processor Kit	438101-B21

Core Options

HP Memory	HP 2GB Fully Buffered DIMM PC2-5300 2x1GB DDR2 Memory Kit	397411-B21
	HP 2GB Fully Buffered DIMM PC2-5300 2x1GB Low Power DDR2 Memory Kit	461826-B21
	HP 4GB Fully Buffered DIMM PC2-5300 2x2GB DDR2 Memory Kit	397413-B21
	HP 4GB Fully Buffered DIMM PC2-5300 2x2GB Low Power DDR2 Memory Kit	461828-B21
	HP 8GB Fully Buffered DIMM PC2-5300 2x4GB DDR2 Memory Kit	397415-B21
	HP 8GB Fully Buffered DIMM PC2-5300 2x4GB Low Power DDR2 Memory Kit	466440-B21
	HP 16GB Fully Buffered DIMM PC2-5300 2x8GB DDR2 Memory Kit	413015-B21
	HP 64GB Fully Buffered DIMM PC2-5300 8x8GB DDR2 Memory Kit	495604-B21
	Memory Board Upgrade Option	
	DL580 G5 memory expansion boards option NOTE: This option consists of 4 memory expansion boards with 4 DIMM sockets each for a total of 16 additional DIMM sockets. This brings the DL580G5 to a total of 32 DIMM sockets. NOTE: Memory Option Kits include Low Power DIMMs. For more information on ProLiant Energy Efficient Features, please visit: http://h18004.www1.hp.com/products/servers/platforms/energyefficient/.	452179-B21
HP Optical Drives	HP 8X/24X SlimLine DVD-ROM Drive NOTE: For models equipped with 7200 and 7300-series CPUs.	264007-B21
	HP 8X Slim DVD+RW Drive NOTE: For models equipped with 7200 and 7300-series CPUs.	383975-B21
	HP Slim SATA DVD-ROM Optical Drive NOTE: For models equipped with 7400-series CPUs.	481041-B21
	HP Slim SATA DVD RW Optical Drive NOTE: For models equipped with 7400-series CPUs.	481043-B21
HP Hard Drives	NOTE: The components of a storage subsystem (e.g. the drive, the HBA/controller, firmware, and the server backplane) should operate at the same data transfer rate or the system bandwidth will be negotiated down to an acceptable level for all components. NOTE: Hard drives have either a one year or three year warranty; refer to the specific hard drive QuickSpecs for details.	
	SAS Hot Plug SFF (2.5-inch) Enterprise (ENT) Drives	
	HP 300GB 6G SAS 10K rpm SFF (2.5-inch) Dual Port Enterprise 3yr Warranty Hard Drive	507127-B21
	HP 146GB 6G SAS 15K rpm SFF (2.5-inch) Dual Port Enterprise 3yr Warranty Hard Drive	512547-B21
	HP 146GB 6G SAS 10K rpm SFF (2.5-inch) Dual Port Enterprise 3yr Warranty Hard Drive	507125-B21
	HP 72GB 6G SAS 15K rpm SFF (2.5-inch) Dual Port Enterprise 3yr Warranty Hard Drive	512545-B21
	SAS Hot Plug SFF (2.5-inch) Midline (MDL) Drives	
	HP 500GB 6G SAS 7.2K rpm SFF (2.5-inch) Dual Port Midline 1yr Warranty Hard Drive	507610-B21

	NOTE: Please see the QuickSpecs for Technical Specifications and additional information: http://h18004.www1.hp.com/products/quickspecs/12244_div/12244_div.html (Worldwide)	
	SATA Hot Plug SFF (2.5-inch) Midline (MDL) Drives	
	HP 500GB 3G SATA 7.2K rpm SFF (2.5-inch) Midline 1yr Warranty Hard Drive	507750-B21
	HP 160GB 3G SATA 7.2K rpm SFF (2.5-inch) Midline 1yr Warranty Hard Drive	530888-B21
	SATA Hot Plug SFF (2.5-inch) Entry (ETY) Drives	
	HP 250GB 3G SATA 5.4K rpm SFF (2.5-inch) Entry 1yr Warranty Hard Drive	460355-B21
	HP 120GB 1.5G SATA 5.4K rpm SFF (2.5-inch) Entry 1yr Warranty Hard Drive	458924-B21
	SATA Hot Plug Midline (MDL) Solid State Drives	
	HP 60GB 3G SATA SFF (2.5-inch) Midline 1yr Warranty Solid State Drive	572071-B21
	HP 120GB 3G SATA SFF (2.5-inch) Midline 1yr Warranty Solid State Drive	572073-B21
	NOTE: Please see the QuickSpecs for Technical Specifications and additional information: http://h18000.www1.hp.com/products/quickspecs/13021_div/13021_div.html (Worldwide)	
HP Networking	Gigabit Ethernet Adapters	
	HP NC112T PCIe Gigabit Server Adapter	503746-B21
	HP NC360T PCI Express Dual Port Gigabit Server Adapter	412648-B21
	HP NC364T PCI Express Quad Port Gigabit Server Adapter	435508-B21
	NOTE: There is a maximum of five NC364T PCI Express Quad Port Gigabit Server Adapter NICs allowed in this server.	
	HP NC373F PCI Express Multifunction Gigabit Server Adapter	394793-B21
	HP NC373T PCI Express Multifunction Gigabit Server Adapter	394791-B21
	HP NC382T PCI Express Dual Port Multifunction Gigabit Server Adapter	458492-B21
	10 Gigabit Ethernet Adapters	
	NOTE: No more than two 10GbE I/O devices are supported in a single ProLiant server.	
	NOTE: A minimum of two Gigabytes (2 GB) of server memory is required per each adapter.	
	NOTE: Direct Attach Cable (DAC) for copper environments or fiber transceivers and cables for fiber-optic environments must be purchased separately.	
	HP NC522SFP Dual Port 10GbE Server Adapter	468332-B21
	NOTE: Please see the QuickSpecs for Technical Specifications and additional information: www.hp.com/go/ProLiantNICs	
HP InfiniBand	HP IB 4X DDR Conn-X PCI-e Dual Port HCA	448397-B21
	HP IB 4X DDR PCI-e DUAL PORT 0 mem HCA	483513-B21
	NOTE: Please see the QuickSpecs for additional information: http://h18000.www1.hp.com/products/quickspecs/13078_div/13078_div.html	

Core Options

HP Power Supplies	NOTE: Prior to making a power supply selection it is highly recommended that the HP Power Advisor is run to determine the right size power supply for your server configuration. The HP Power Advisor is located at: www.hp.com/go/hppoweradvisor. NOTE: Two Hot Plug Power Supplies needed for standard operation. Four Hot Plug Power Supplies needed to add redundancy. Configurations with 3 or 4 processors that will use lowline (110V) input power require four Hot Plug Power Supplies.	
	HP 1200W 12V Hot plug AC Power Supply	437572-B21
	HP 1200W-48V DC Common Slot Power Supply	437573-B21
	NOTE: DC power supplies contain a -48V DC power cord designed for in rack DC power rectifiers.	

NOTE: Some options may not be integrated at the factory. To ensure only valid configurations are ordered, HP recommends the use of an HP approved configurator. Contact your local sales representative for additional information.

HP Insight Software	HP Insight Control	
	HP Insight Control, Single-Server License including 1 year of 24x7 Technical Support and Updates	452148-B22
	HP Insight Control suite, No Media, Electronic License including 1 year of 24x7 Technical Support and Updates	T9074BAE
	HP Insight Control, Electronic License for bundling with ProLiant ML/DL server, including 1 year of 24x7 Technical Support and Updates	TC278AAE
	HP Insight Control, Tracking License for bundling with ProLiant ML/DL server, including 1 year of 24x7 Technical Support and Updates	TC275A
	NOTE: Electronic and Flexible-Quantity licenses can be used to purchase multiple licenses with a single activation key. NOTE: Electronic software is available in all countries except China and Japan. Customers in China and Japan should order the physical equivalent. NOTE: Customer will receive a license entitlement certificate. The license entitlement certificate must be redeemed online or via fax in order to obtain the license activation key(s). Includes one year of 24 x 7 HP Software Technical Support and Update Service. NOTE: Licenses ship without media. The HP Insight Control Media Kit can be ordered separately, or can be downloaded at: http://www.hp.com/go/insightupdates. NOTE: For additional license options please see the Insight Control QuickSpecs at: http://h18000.www1.hp.com/products/quickspecs/12631_div/12631_div.html	
	HP Insight Control for Linux	
	HP Insight Control for Linux, 1-server license, including one year of 24x7 Technical Support and Updates, Electronic	TC213AAE
	HP Insight Control for Linux, No Media, 1-Server license, including one year of 24x7 Technical Support and Updates	TC209A
	HP Insight Control for Linux, Media pack (DVD) - No licenses included NOTE: Media pack DVD contains the ISO image for HP Insight Control for Linux, HP Systems Insight Manager, HP Insight Control power management, HP Insight Control virtual machine management, and an integrated installer. Servers must be acquired separately.	TC208A
	NOTE: Licenses ship without media. The Media Kit for Insight Control for Linux can be ordered separately, or can be downloaded at: http://www.hp.com/go/ic-linux (click on Download button). NOTE: Electronic software is available in all countries except China and Japan. Customers in China and Japan should order the physical equivalent. NOTE: Electronic and Flexible-Quantity licenses can be used to purchase multiple licenses with a single set of activation keys. NOTE: For additional License Kits, including electronic licensing options, please see the QuickSpecs at: http://h18000.www1.hp.com/products/quickspecs/13019_div/13019_div.html	
	HP Integrated Lights-Out (iLO) Advanced	
	HP Integrated Lights-Out Advanced, No Media, 1-Server License, including 1 year of 24x7 Technical Support and Updates	512485-B21

Additional Options

	HP ProLiant Essentials Integrated Lights-Out Advanced Pack, Electronic, including 1 year of 24x7 Technical Support and Updates	TA850AAE
	NOTE: This license allows 1 server to be deployed and managed via HP iLO Advanced. Customer will receive a printed license entitlement certificate via physical shipment. The license entitlement certificate must be redeemed online or via fax in order to obtain the license activation key(s). Includes one year of 24 x 7 HP Software Technical Support Service NOTE: Electronic software is available in all countries except China and Japan. Customers in China and Japan should order the physical equivalent. NOTE: For additional license kits, including electronic delivery options, please see the QuickSpecs at: http://h18000.www1.hp.com/products/quickspecs/12362_div/12362_div.html	
	HP Insight Control server deployment	
	HP Insight Control server deployment Electronic License including 1 year 24x7 Technical Support and Updates	T9082AAE
	HP Insight Control server deployment 1-Server License including 1 year 24x7 Technical Support and Updates	452151-B21
	NOTE: Licenses ship without media. The Insight Control Media Kit can be ordered separately, or can be downloaded at: http://www.hp.com/go/insightupdates. NOTE: Electronic licenses can be used to purchase multiple licenses with a single activation key and is available in all countries except China and Japan. Customers in China and Japan should order the physical equivalent. NOTE: Customer will receive a license entitlement certificate, which must be redeemed online or via fax in order to obtain the license activation key(s). Includes one year of 24 x 7 HP Software Technical Support Service. NOTE: For additional license kits please see the Insight Control QuickSpecs at: http://h18004.www1.hp.com/products/quickspecs/12631_div/12631_div.html	
HP I/O Accelerator Options	HP 160GB SLC PCIe ioDrive NOTE: A low-profile PCI bracket is included for use in low-profile slots.	600278-B21
	HP 320GB MLC PCIe ioDrive NOTE: A low-profile PCI bracket is included for use in low-profile slots.	600279-B21
	HP 320GB SLC PCIe ioDrive Duo	600281-B21
	HP 640GB MLC PCIe ioDrive Duo	600282-B21
	NOTE: Please see the QuickSpecs for Technical Specifications and additional information: http://h18000.www1.hp.com/products/quickspecs/13587_div/13587_div.html (Worldwide)	
HP Storage Controllers	SAS Controllers	
	Smart Array E200 Controller	
	HP Smart Array E200/128 BBWC 2-ports Int PCIe x4 SAS Controller	411508-B21
	Smart Array E500 Controller	
	HP Smart Array E500/256 2-ports Ext PCIe x8 SAS Controller	435129-B21
	Smart Array P400 Controller	
	HP Smart Array P400/256 2-ports Int PCIe x8 SAS Controller	405132-B21

HP Smart Array P400 512MB Battery Kit	411064-B21
Smart Array P600 Controller	
HP Smart Array P600/256 1-ports Int/2-ports Ext PCI-X SAS Controller	337972-B21
Smart Array P800 Controller	
HP Smart Array P800/512 BBWC 2-ports Int/2-ports Ext PCIe x8 SAS Controller	381513-B21
Smart Array P212 Controller	
HP Smart Array P212/ZM 1-ports Int/1-ports Ext PCIe x8 SAS Controller	462828-B21
HP Smart Array P212/256 1-ports Int/1-ports Ext PCIe x8 SAS Controller	462834-B21
Smart Array P410 Controller	
HP Smart Array P410/256 2-ports Int PCIe x8 SAS Controller	462862-B21
HP Smart Array P410/512 BBWC 2-ports Int PCIe x8 SAS Controller	462864-B21
HP Smart Array P410/1G FBWC 2-ports Int PCIe x8 SAS Controller	572532-B21
HP Smart Array P410/512 FBWC 2-ports Int PCIe x8 SAS Controller	578230-B21
Smart Array P411 Controller	
HP Smart Array P411/256 2-ports Ext PCIe x8 SAS Controller	462830-B21
HP Smart Array P411/512 BBWC 2-ports Ext PCIe x8 SAS Controller	462832-B21
HP Smart Array P411/1G FBWC 2-ports Ext PCIe x8 SAS Controller	572531-B21
HP Smart Array P411/512 FBWC 2-ports Ext PCIe x8 SAS Controller	578229-B21
Smart Array P812 Controller	
HP Smart Array P812/1G FBWC 2-ports Int/4-ports Ext PCIe x8 SAS Controller	487204-B21
Optional Upgrades	
HP 128MB SA641/642/E200 Battery Backed Write Cache NOTE: Supports the Smart Array E200 Controller and Smart Array 642 Controller.	351580-B21
HP Smart Array P400 Battery Attach Kit NOTE: This option kit contains a 24" battery cable and adhesive material for installing a battery into the server if a Smart Array P400 is integrated outside of the factory or if the BBWC is not pre-installed from the factory. For all solutions, please refer to the server QuickSpecs and User's Manual for detailed installation instructions.	417836-B21
HP 512MB w/Battery Smart Array Battery Back Write Cache Enabler NOTE: For Smart Array P400 Controller only.	405148-B21
HP Smart Array Cache Battery Kit NOTE: For Smart Array P400 Controller only.	383280-B21
HP 256MB P-series Cache Upgrade NOTE: Supported on HP Smart Array P212 Controller only.	462968-B21
HP 512MB P-Series Battery Backed Write Cache Upgrade NOTE: Supported on HP Smart Array P410 Controller and HP Smart Array P411 Controller only.	462967-B21
HP 1GB Flash Backed Cache	534562-B21
HP 512MB Flash Backed Write Cache	534916-B21
HP Smart Array Advanced Pack including 1yr 24x7 Technical Support and Updates Single Server License NOTE: This part number can be used to purchase a single license or to order multiple licenses with a single activation key. Customers will receive a license entitlement	516471-B21

certificate via e-mail. The license entitlement certificate must be redeemed online or via fax in order to obtain the license activation key(s). Include one year of 24x7 HP Software Technical Support Services.

NOTE: Please see the QuickSpecs for Technical Specifications and additional information:
http://h18000.www1.hp.com/products/quickspecs/12460_div/12460_div.html (Smart Array E200 Controller)
http://h18000.www1.hp.com/products/quickspecs/12700_div/12700_div.html (Smart Array E500 Controller)
http://h18000.www1.hp.com/products/quickspecs/12400_div/12400_div.html (Smart Array P400 Controller)
http://h18000.www1.hp.com/products/quickspecs/12247_div/12247_div.html (Smart Array P600 Controller)
http://h18000.www1.hp.com/products/quickspecs/12616_div/12616_div.html (Smart Array P800 Controller)
http://h18000.www1.hp.com/products/quickspecs/13203_div/13203_div.html (Smart Array P212 Controller)
http://h18000.www1.hp.com/products/quickspecs/13201_div/13201_div.html (Smart Array P410 Controller)
http://h18000.www1.hp.com/products/quickspecs/13202_div/13202_div.html (Smart Array P411 Controller)
http://h18000.www1.hp.com/products/quickspecs/13558_div/13558_div.html (Smart Array P812 Controller)
http://h18000.www1.hp.com/products/quickspecs/13200_div/13200_div.html (Smart Array Advanced Pack)

SAS Controller Options

HP 24 Bay 3Gb SAS Expander Card	468406-B21

NOTE: Please see the QuickSpecs for Technical Specifications and additional information:
http://h18004.www1.hp.com/products/quickspecs/13232_na/13232_na.html (SAS Expander Card)

SAS HBA

HP SC08Ge 2-ports Ext PCIe x8 SAS Host Bus Adapter	488765-B21
HP Modular Smart Array SC44Ge 1-ports Int/1-ports Ext PCIe x8 SAS Host Bus Adapter	416096-B21

NOTE: When using the SC44Ge with SATA hard drives, 1.5G SATA models are required.

HP 64/133 2-ports Int PCI-X SAS Host Bus Adapter	347786-B21

NOTE: When using the 8 Internal Port SAS HBA with SATA hard drives, 1.5G SATA models are required.

NOTE: Please see the QuickSpecs for Technical Specifications and additional information:
http://h18004.www1.hp.com/products/quickspecs/13082_div/13082_div.html (SC08Ge HBA)
http://h18004.www1.hp.com/products/quickspecs/12617_div/12617_div.html (SC44Ge HBA)
http://h18004.www1.hp.com/products/quickspecs/12332_div/12332_div.html (8 Internal Port SAS HBA)

SCSI Controllers for External Drive/Storage Support

Additional Options

	HP 128MB SA641/642/E200 Battery Backed Write Cache NOTE: Supports the Smart Array 641, and Smart Array 642 Controller.	351580-B21
	SCSI HBA	
	HP SC11Xe Ultra320 Single Channel/ PCIe x4 SCSI Host Bus Adapter NOTE: Recommended HBA for SCSI tape drive connect. NOTE: Please see the QuickSpecs for Technical Specifications and additional information: www.hp.com/products/smartarray	412911-B21
HP Power Cords	HP IEC320-C14 to C13 (10A/10ft/3.0m) PDU Cable	142257-003
HP Tape Backup	NOTE: For the complete range of StorageWorks tape drives, autoloaders, libraries and media see: http://www.hp.com/go/tape. For hardware and software compatibility of HP StorageWorks tape backup products see: http://www.hp.com/go/connect.	
	Rack-Mount Tape Solutions	
	HP StorageWorks DAT 320 USB Tape Drive in 1U USB Rack Kit	AP835A
	HP StorageWorks DAT 320 USB Internal Tape Drive	AJ825A
	HP StorageWorks DAT 320 SAS Internal Tape Drive NOTE: Connection using HP SC44Ge SAS Host Bus Adapter (416096-B21) recommended.	AJ830A
	HP StorageWorks DAT 320 SAS External Tape Drive	AJ828A
	DAT 320 USB External Tape Drive	AJ823A
	HP StorageWorks 1/8 G2 LTO-4 Ultrium 1760 SAS Tape Autoloader NOTE: Requires HP 1U Tape Autoloader Rack Kit (AH166A) for rack installation. Connection using HP SC44Ge SAS Host Bus Adapter (416096-B21) recommended.	AK377A
	HP StorageWorks 1/8 G2 LTO-3 Ultrium 920 SAS Autoloader	AH558A
	HP StorageWorks LTO-3 Ultrium 920 SAS Internal Tape Drive NOTE: Connection using HP SC44Ge SAS Host Bus Adapter (416096-B21) recommended.	EH847A
	HP StorageWorks LTO-4 Ultrium 1760 SAS Internal Tape Drive NOTE: Connection using HP SC44Ge SAS Host Bus Adapter (416096-B21) recommended.	EH919A
	HP StorageWorks LTO-4 Ultrium 1840 SAS Internal Tape Drive NOTE: Connection using HP SC44Ge SAS Host Bus Adapter (416096-B21) recommended.	EH860A
	HP StorageWorks LTO-5 Ultrium 3280 Internal Tape Drive NOTE: For installation into 3U SAS rack kit (AG576B). No peripheral bay available for installation into the server. Connection using the HP SC44Ge SAS Host Bus Adapter (416096-B21) recommended.	EH899A
	HP StorageWorks LTO448 SAS Int Drive	DW085A
	HP StorageWorks MSL2024 1 LTO-4 Ultrium 1760 SAS Drive Library	AK378A
	HP StorageWorks MSL2024 0-drive, 24 Slot Tape Library	AK379A
	HP MSL2024 Ultr 920 SAS Tape Library	AH559A
	HP MSL4048 0-Drive Tape Library	AK381A
	HP MSL4048 2 LTO-4 Ultr 1760 SAS Library	AK380A

	HP MSL4048 Ultr 920 SAS Tape Library	AH560A
	HP MSL8048 0-drive 48 Slot Tape Library	AU300A
	HP MSL8096 2 LTO-4 Ultr 1760 SAS Library	AK382A
HP Disk Backup	NOTE: For the complete range of StorageWorks D2D Backup Systems see: http://www.hp.com/go/d2d. For the complete range of StorageWorks RDX drives and media see: http://www.hp.com/go/rdx. For hardware and software compatibility of HP StorageWorks disk backup products see: http://www.hp.com/go/connect.	
	HP StorageWorks RDX Removable Disk Backup Systems USB	
	HP StorageWorks RDX500 Internal Removable Disk Backup System NOTE: For installation into 1U USB Rack-Mount Kit (A8007A). No peripheral bay available for drive installation into the server. 500GB of disk capacity per data cartridge.	AJ934A
	HP StorageWorks RDX750 Internal Removable Disk Backup System NOTE: For installation into 1U USB Rack-Mount Kit (A8007A). No peripheral bay available for drive installation into the server. 750GB of disk capacity per data cartridge.	AW577A
	HP StorageWorks RDX 1TB Internal Removable Disk Backup System NOTE: For installation into 1U USB Rack-Mount Kit (A8007A). No peripheral bay available for drive installation into the server. 1 TB of disk capacity per data cartridge.	BV847A
HP StorageWorks Options	**StorageWorks Fibre Channel HBA** NOTE: The following is a list of all Fibre Channel Host Bus Adapters for Windows and Linux. For detailed compatibility information please see: http://h18006.www1.hp.com/storage/saninfrastructure/hba.html	
	Brocade Fibre Channel HBAs	
	HP StorageWorks 81B PCI-e FC HBA Single Port	AP769A
	HP StorageWorks 82B PCI-e FC HBA Dual Port	AP770A
	HP StorageWorks 41B 4Gb PCI-e FC HBA	AP767A
	HP StorageWorks 42B 4Gb Dual-Port PCI-e FC HBA	AP768A
	Emulex Fibre Channel HBAs	
	HP StorageWorks 81E PCI-e FC HBA Single Port	AJ762A
	HP StorageWorks 82E PCI-e FC HBA Dual Port	AJ763A
	HP StorageWorks FC2142 4Gb PCI-e HBA	A8002A
	HP StorageWorks FC2242 Dual Channel 4Gb PCI-e HBA	A8003A
	QLogic Fibre Channel HBAs	
	HP StorageWorks 81Q PCI-e FC HBA Single Port	AK344A
	HP StorageWorks 82Q PCI-e FC HBA Dual Port	AJ764A
	HP StorageWorks FC1142 4Gb PCI-e HBA	AE311A
	HP StorageWorks FC1242 Dual Channel 4Gb PCI-e HBA	AE312A
	StorageWorks SCSI HBA	
	HP U320e SCSI Host Bus Adapter NOTE: Recommended HBA for MSL SCSI Tape Library connect.	AH627A

	StorageWorks Converged Network Adapter	
	HP CN1000E 2P Converged Network Adapter	AW520A
HP Disk Storage Systems	MSA SAN Storage Arrays	
	HP StorageWorks 50 Modular Smart Array	364430-B21
	NOTE: Please see the QuickSpecs for additional options and configuration information at: http://h18000.www1.hp.com/products/quickspecs/12245_div/12245_div.html (Worldwide)	
	HP StorageWorks 60 Modular Smart Array	418408-B21
	NOTE: Supports 12 SFF drives, and SAS 3 Gb/s and SATA 1.5 Gb/s NOTE: Please see the QuickSpecs for additional options and configuration information at: http://h18000.www1.hp.com/products/quickspecs/12627_div/12627_div.html (Worldwide)	
	HP StorageWorks 70 Modular Smart Array	418800-B21
	NOTE: Supports 25 SFF drives, and SAS 3 Gb/s and SATA 1.5 Gb/s. NOTE: Please see the QuickSpecs for additional options and configuration information at: http://h18000.www1.hp.com/products/quickspecs/12652_div/12652_div.html (Worldwide)	
	Disk Enclosures	
	HP StorageWorks D2600 Disk Enclosure	AJ940A
	NOTE: Please see the QuickSpecs for additional options and configuration information at: http://h18000.www1.hp.com/products/quickspecs/13404_div/13404_div.html (Worldwide)	
HP Uninterruptible Power Systems	HP Rack-mountable UPS	
	HP R/T3000 Uninterruptible Power System (UPS)	
	HP R/T3000 UPS, Low voltage NA/JPN	AF452A
	HP R/T3000 UPS, High voltage, NA/JPN	AF453A
	HP R/T3000 UPS, High voltage, detachable inlet cord INTL	AF454A
	NOTE: Please see the QuickSpecs for additional information: http://h18000.www1.hp.com/products/quickspecs/13417_div/13417_div.html (Worldwide)	
	HP Rack-Mountable R5500 UPS	
	HP R5500 VA UPS, INTL	AF416A
	HP R5500 VA UPS, NA/JPN	AF426A
	NOTE: Please see the QuickSpecs for Technical Specifications and additional information: http://h18000.www1.hp.com/products/quickspecs/11871_div/11871_div.html (Worldwide)	

NOTE: For additional information on HP Uninterruptible Power Systems please go to: www.hp.com/servers/rackups.
NOTE: Please see the UPS and PDU cable matrix's on the HP Power Protection and Management page. Under Power Cords, click on the "HP Power Cord Matrix" link. That link will list cable descriptions, requirements, and specifications for UPS and PDU units. Please see the following link: www.hp.com/products/powercords.

HP Power Distribution Unit	Monitored PDUs	
	HP Monitored Power Distribution Unit: Full Rack Version	
	HP 8.6 kVA S1324 Monitored PDU- single input, 3Ø, 24A (NA/JPN)	AF504A
	HP 8.3 S1140 Monitored PDU- single input, 1Ø, 40A (NA/JPN)	AF506A
	HP 11 kVA S1316 Monitored PDU- single input, 3Ø, 16A (INTL)	AF508A
	HP 7.3 kVA S1132 Monitored PDU- single input, 1Ø, 32A (INTL)	AF510A
	HP Monitored Power Distribution Unit: Half Rack Version	
	HP 17.3 kVA S348 Monitored PDU- single input, 3Ø, 48A (NA/JPN)	AF916A
	HP 4.9 kVA S124 Monitored PDU- single input, 1Ø, 24A (NA/JPN)	AF914A
	HP 7.3 kVA S132 Monitored PDU- single input, 1Ø, 32A (INTL)	AF915A
	NOTE: Please see the QuickSpecs for Technical Specifications and additional information: http://h18000.www1.hp.com/products/quickspecs/12118_div/12118_div.html (Worldwide)	
	Power Distribution Units 1U/0U (Up to 32 outlets)	
	NOTE: 1U/0U mounting brackets shipped with the unit (optimized for 10000 G2 and 9000 series racks).	
	3.6kVA Model - mPDU, 16A, High (WW)	252663-B24
	2.8 kVA Model - mPDU, 24A, Low (NA/JPN)	252663-D71
	4.9kVA Model - mPDU, 24A, High (NA/JPN)	252663-D72
	7.3kVA Model - mPDU, 32A, High (INT'L)	252663-B31
	8.3kVA Model - mPDU, 40A, High (WW)	252663-B21
	8.3kVA Model - mPDU, 40A, High (power cord attached) (NA/JPN)	252663-D73
	9.2kVA Model - mPDU, 40A, High (power cord attached) (INTL)	252663-B32
	NOTE: Please see the following Modular Power Distribution Unit (Zero-U/1U Modular PDUs) QuickSpecs for additional options including cables: http://h18000.www1.hp.com/products/quickspecs/11041_div/11041_div.html (Worldwide)	
	NOTE: Please see the UPS and PDU cable matrix's on the HP Power Protection and Management page. Under Power Cords, click on the "HP Power Cord Matrix" link. That link will list cable descriptions, requirements, and specifications for UPS and PDU units. Please see the following link: www.hp.com/products/powercords.	

Additional Options

HP Rack Series	HP Rack 10000 G2 Series (Carbon/Graphite Metallic)	
	10642 G2 (42U) Rack Cabinet - Pallet	AF001A
	10642 G2 (42U) Rack Cabinet - Shock Pallet	AF002A
	HP 10642G2 1200mm deep Rack cabinet Shock Rack	AF092A
	HP 10647G2 1200mm deep Rack cabinet Shock Rack	AF094A

NOTE: It is mandatory to use a shock pallet when shipping racks with equipment installed.

NOTE: Please see the QuickSpecs for Technical Specifications and additional information: http://h18000.www1.hp.com/products/quickspecs/12402_div/12402_div.html (Worldwide)

NOTE: For additional information regarding Rack Cabinets, please see the following URL: http://www.hp.com/go/rackandpower.

NOTE: The increasing power of new high-performance processor technology requires increased cooling efficiency for rack-mounted servers. The 10000 G2 Series Racks provide enhanced airflow for maximum cooling, allowing these racks to be fully loaded with servers using the latest processors.

CAUTION: If a third-party rack is used, observe the following additional requirements to ensure adequate airflow and to prevent damage to the equipment: Front and rear doors: If your 42U server rack includes closing front and rear doors, you must allow 830 square inches (5,350 sq cm) of hole evenly distributed from top to bottom to permit adequate airflow (equivalent to the required 64 percent open area for ventilation). Side: The clearance between the installed rack component and the side panels of the rack must be a minimum of 2.75 inches (7 cm).

CAUTION: Always use blanking panels to fill all remaining empty front panel U-spaces in the rack. This arrangement ensures proper airflow. Using a rack without blanking panels results in improper cooling that can lead to thermal damage.

NOTE: Quick deploy rail system provides tool-free support for racks with square or round mounting holes (including Compaq/HP 7000, 9000, 10000 G2 and HP series), with an adjustment range of 24" - 36". The ambidextrous cable management arm can be mounted on either the left or right side for improved cable management.

Additional Options

HP Rack Options	**HP Server Console Switches**	
	HP Server console switch 0x2x8	AF616A
	HP Server console switch 0x2x16	AF617A
	NOTE: Please see the QuickSpecs for Technical Specifications and additional information: http://h18000.www1.hp.com/products/quickspecs/11834_div/11834_div.html (Worldwide)	
	HP Server Console Switch G2 with Virtual Media & CAC	
	0x2x16 KVM Server Console G2 Switch with Virtual Media and CAC	AF618A
	0x2x32 KVM Server Console G2 Switch with Virtual Media and CAC	AF619A
	NOTE: Please see the QuickSpecs for Technical Specifications and additional information: http://h18000.www1.hp.com/products/quickspecs/13475_div/13475_div.html (Worldwide)	
	HP IP Console Switch G2 with Virtual Media & CAC	
	1x1Ex8 KVM IP Console Switch G2 with Virtual Media and CAC	AF620A
	2x1Ex16 KVM IP Console Switch G2 with Virtual Media and CAC	AF621A
	4x1Ex32 KVM IP Console Switch G2 with Virtual Media and CAC	AF622A
	NOTE: Please see the QuickSpecs for Technical Specifications and additional information: http://h18000.www1.hp.com/products/quickspecs/13474_div/13474_div.html (Worldwide)	
HP USB and SD Options	USB 2-Button Optical Scroll Mouse (Carbonite/Silver)	DC172B
	HP USB 04 Standard Keyboard	DT528A#ABA
	HP 2GB USB Flash Media Drive Key NOTE: HP qualified blank USB key for use with HP ProLiant servers that support the VMware virtualization environment and other HP value-add software like SmartStart. HP recommends this industry standard USB flash device for use with VMware ESXi. USB device must be installed in the internal slot of the ProLiant server for use with VMware ESXi. Refer to HP VMware Getting Started Guide for installation instructions.	608447-B21

Additional Options

HP Care Pack Services	Hardware Services On-site Service	
	4-Hour On-site Service, 5-Day x 13-Hour Coverage, 3 Years, Electronic	U4607E
	4-Hour On-site Service, 7-Day x 24-Hour Coverage, 3 Years, Electronic	U4608E
	6-Hour Call to Repair, On-site Service 7-Day x 24-Hour Coverage, 3 Years (U.S. Part Number)	
	6-Hour Call to Repair, On-site Service, 7-Day x 24-Hour Coverage, 3 Years, Electronic	U4609E
	Installation & Start-up Services	
	Hardware Installation, Electronic	U4617E
	Installation & Start-Up of a ProLiant server and Microsoft or Linux O/S per the Customer Description and/or Data Sheet. To be delivered on a scheduled basis 8am-5pm, M-F, excl. HP holidays, Electronic	U4618E
	Installation and Startup for Essentials Rapid Deployment Pack, Electronic	U5683E
	Support Plus	
	Onsite HW support, 8am-9pm, M-F, 4hr response and Microsoft O/S SW Tech support offsite, onsite at HP's discretion, 8am-9pm, M-F 2hr response time excl. HP holidays, Electronic	U4619E
	Support Plus 24	
	Onsite HW support 24x7, 4hr response and Microsoft O/S SW Tech support offsite, onsite at HP's discretion, 24x7 2hr response time incl. HP holidays, Electronic	U4620E
	Onsite HW support 24x7, 4hr response and SuSE O/S SW Tech support offsite, onsite at HP's discretion, 24x7 2hr response time incl. HP holidays, Electronic	U6316E
	NOTE: For more information, customer/resellers can contact: http://www.hp.com/services/carepack	

NOTE: Memory configurations listed do not apply to "Factory Integrated Models".
NOTE: For additional memory information and configuration rules, please see the memory section of the DL580 G5 User Guide at: http://www.hp.com/support/DL580G5_UG_en.

HP ProLiant DL580 G5 - Base memory configuration for 16 DIMM sockets in the 4 GB configuration

Standard Memory

4 GB PC2-5300 Fully Buffered DIMMs (DDR2-667) (4 x 1 GB)

All HP ProLiant DL580 G5 systems come standard with 4 banks of memory sockets spanning 4 memory channels for a total of 16 DIMM sockets on board memory . Memory slots xA and xB already populated with memory (2P models with 4x 1GB FBDIMM memory modules and 4P models with 4x 2GB FB DIMM memory modules) to help achieve maximum performance.

Upgrading Memory and Memory Interleaving

To achieve maximum memory performance and flexibility, the HP ProLiant DL580 G5 requires memory to be upgraded in groups of four identical FBDIMMs populated across the four memory channels. In simple terms, the two FBDIMM locations at xC and the two xD locations must be populated with four identical part numbered FBDIMMs. Memory population continues by populating locations xE and xF, then xG and xH. FBDIMM architecture does not allow any gaps in this sequence such that if locations xE and xF were populated and xC and xD were not, the memory at xE and xF would not be recognized by the system.

Standard Memory Plus Optional Memory

Up to 128 GB memory is available with the removal of the standard memory and the installation of 1 GB, 2 GB, 4 GB, and/or 8 GB PC2-5300 Fully Buffered DIMMs. Up to 256 GB memory is available with the removal of the standard memory, the installation of the DL580 G5 Memory Expansion Boards Option, and the installation of 8 GB PC2-5300 Fully Buffered DIMMs.

Standard Memory Replaced with Optional Memory and Utilizing the Optional Memory Expansion Boards

Up to 128 GB memory is available with the removal of the standard memory and the optional installation of PC2-5300 Fully Buffered DIMMs (DDR2-667) memory kits. When utilizing the Optional Memory Expansion boards the FBDIMM population rules apply. Four identical FBDIMMs must be populated across the four memory channels. The FBDIMM locations on the Expansion boards are labeled so that four FBDIMMs should be populated in the A locations on each board, followed by populating the four B locations continuing this sequence through locations D. eq.

Memory		Embedded DIMM Sockets							
		1	2	3	4	5	6	7	8
		1A	2C	3E	4G	5A	6C	7E	8G
Standard	4 GB	1 GB	Empty	Empty	Empty	1 GB	Empty	Empty	Empty
Standard + Optional	Maximum: 100 GB Shown: 28 GB	1 GB	2 GB	2 GB	2 GB	1 GB	2 GB	2 GB	2 GB
Maximum (Without Memory Expansion Boards Option)	128 GB	8 GB	8 GB	8 GB	8 GB	8 GB	8 GB	8 GB	8 GB

Memory		Embedded DIMM Sockets							
		9	10	11	12	13	14	15	16
		9B	10D	11F	12H	13B	14D	15F	16H
Standard	4 GB	1 GB	Empty	Empty	Empty	1 GB	Empty	Empty	Empty

Memory

Standard + Optional	Maximum: 100 GB Shown: 28 GB	1 GB	2 GB	2 GB	2 GB	1 GB	2 GB	2 GB	2 GB
Maximum (Without Memory Expansion Boards Option)	128 GB	8 GB	8 GB	8 GB	8 GB	8 GB	8 GB	8 GB	8 GB

NOTE:

- Memory channel 1 includes slots 1-4
- Memory channel 2 includes slots 5-8
- Memory channel 3 includes slots 9-12
- Memory channel 4 includes slots 13-16

HP ProLiant DL580 G5 - Base memory configuration for 16 DIMM sockets in the 8 GB configuration

Standard Memory

8 GB PC2-5300 Fully Buffered DIMMs (DDR2-667) (4 x 2 GB)

All HP ProLiant DL580 G5 systems come standard with 4 banks of memory sockets spanning 4 memory channels for a total of 16 DIMM sockets on board memory . Memory slots xA and xB already populated with memory (2P models with 4x 1GB FBDIMM memory modules and 4P models with 4x 2GB FB DIMM memory modules) to help achieve maximum performance.

Upgrading Memory and Memory Interleaving

To achieve maximum memory performance and flexibility, the HP ProLiant DL580 G5 requires memory to be upgraded in groups of four identical FBDIMMs populated across the four memory channels. In simple terms, the two FBDIMM locations at xC and the two xD locations must be populated with four identical part numbered FBDIMMs. Memory population continues by populating locations xE and xF, then xG and xH. FBDIMM architecture does not allow any gaps in this sequence such that if locations xE and xF were populated and xC and xD were not, the memory at xE and xF would not be recognized by the system.

Standard Memory Plus Optional Memory

Up to 104 GB memory is available with the standard memory and the optional installation of 1 GB, 2 GB, 4 GB, and/or 8 GB PC2-5300 Fully Buffered DIMMs. One possible configuration is shown below, in which 48 GB is added to the standard 8 GB for a total of 56 GB.

Standard Memory Replaced with Optional Memory and Utilizing the Optional Memory Expansion Boards

Up to 128 GB memory is available with the removal of the standard memory and the optional installation of 1 GB, 2 GB, 4 GB, and/or 8 GB PC2-5300 Fully Buffered DIMMs. Up to 256 GB memory is available with the removal of the standard memory, the installation of the DL580 G5 Memory Expansion Boards Option, and the installation of 8 GB PC2-5300 Fully Buffered DIMMs.

Memory

Memory		Embedded Slots							
		1	2	3	4	5	6	7	8
		1A	2C	3E	4G	5A	6C	7E	8G
Standard	8 GB	2 GB	Empty	Empty	Empty	2 GB	Empty	Empty	Empty
Standard + Optional	Maximum: 104 GB Shown: 56 GB	2 GB	4 GB	4 GB	4 GB	2 GB	4 GB	4 GB	4 GB
Maximum (Without Memory Expansion Boards Option)	128 GB	8 GB	8 GB	8 GB	8 GB	8 GB	8 GB	8 GB	8 GB

Memory		Embedded Slots							
		9	10	11	12	13	14	15	16
		9B	10D	11F	12H	13B	14D	15F	61H
Standard	8 GB	2 GB	Empty	Empty	Empty	2 GB	Empty	Empty	Empty
Standard + Optional	Maximum: 104 GB Shown: 56 GB	2 GB	4 GB	4 GB	4 GB	2 GB	4 GB	4 GB	4 GB
Maximum (Without Memory Expansion Boards Option)	128 GB	8 GB	8 GB	8 GB	8 GB	8 GB	8 GB	8 GB	8 GB

NOTE:

- Memory channel 1 includes slots 1-4
- Memory channel 2 includes slots 5-8
- Memory channel 3 includes slots 9-12
- Memory channel 4 includes slots 13-16

HP ProLiant DL580 G5 - For 32 DIMM configurations with the standard shipping 4 GB of memory

Standard Memory

4 GB PC2-5300 Fully Buffered DIMMs (DDR2-667) (4 x 1 GB)

All HP ProLiant DL580 G5 systems come standard with 4 banks of memory sockets spanning 4 memory channels for a total of 16 DIMM sockets on board memory. The optional DL580 G5 Memory Expansion Boards Option adds an additional 16 DIMM sockets, which brings the Dl580 G5 to a total of 32 DIMM sockets.

Upgrading Memory and Memory Interleaving

To achieve maximum memory performance and flexibility, the HP ProLiant DL580 G5 requires memory to be upgraded in groups of four identical FBDIMMs populated across the four memory channels. In simple terms, the two FBDIMM locations at xC and the two xD locations must be populated with four identical part numbered FBDIMMs. Memory population continues by populating locations xE and xF, then xG and xH. FBDIMM architecture does not allow any gaps in this sequence such that if locations xE and xF were populated and xC and xD were not, the memory at xE and xF would not be recognized by the system.

Standard Memory Plus Optional Memory

Up to 228 GB memory is available with the standard memory of 4 GB and the optional installation of 1 GB, 2 GB, 4 GB, and/or 8 GB PC2-5300 Fully Buffered DIMMs (DDR2-667) in all embedded DIMM sockets as well as the memory expansion boards slots. One possible configuration is shown below, in which 56 GB is added to the standard 4 GB for a total of 60 GB.

Standard Memory Replaced with Optional Memory

Up to 256 GB of memory is available with the removal of the standard 4 GB of memory and the optional installation of PC2-5300 Fully Buffered DIMMs in all the embedded slots as well as the memory expansion boards slots.

Memory		Embedded Slots							
		1	2	3	4	5	6	7	8
		1A	2C	3E	4G	5A	6C	7E	8G
Standard	4 GB	1 GB	Empty	Empty	Empty	1 GB	Empty	Empty	Empty
Standard + Optional	Maximum: 228GB Shown: 60 GB	1 GB	2 GB	2 GB	2 GB	1 GB	2 GB	2 GB	2 GB
Maximum	256 GB	8 GB	8 GB	8 GB	8 GB	8 GB	8 GB	8 GB	8 GB

Memory		Embedded Slots							
		9	10	11	12	13	14	15	16
		9B	10D	11F	12H	13B	14D	15F	61H
Standard	4 GB	1 GB	Empty	Empty	Empty	1 GB	Empty	Empty	Empty
Standard + Optional	Maximum: 228 GB Shown: 60 GB	1 GB	2 GB	2 GB	2 GB	1 GB	2 GB	2 GB	2 GB
Maximum	256 GB	8 GB	8 GB	8 GB	8 GB	8 GB	8 GB	8 GB	8 GB

Expansion Board Memory		Optional DL580 G5 Memory Expansion Boards Option Slots							
		17	18	19	20	21	22	23	24
		1A	2B	3C	4D	1A	2B	3C	4D
Standard	4 GB	Empty	Empty	Empty	Empty	Empty	Empty	Empty	Empty

Memory

Standard + Optional	Maximum: 228 GB Shown: 60 GB	2 GB	2 GB	2 GB	2 GB	2 GB	2 GB	2 GB	2 GB
Maximum	256 GB	4 GB	4 GB	4 GB	4 GB	4 GB	4 GB	4 GB	4 GB
Expansion Board Memory		Optional DL580 G5 Memory Expansion Boards Option Slots							
		25	26	27	28	29	30	31	32
		1A	2B	3C	4D	1A	2B	3C	4D
Standard	4 GB	Empty	Empty	Empty	Empty	Empty	Empty	Empty	Empty
Standard + Optional	Maximum: 228 GB Shown: 60 GB	2 GB	2 GB	2 GB	2 GB	2 GB	2 GB	2 GB	2 GB
Maximum	256 GB	4 GB	4 GB	4 GB	4 GB	4 GB	4 GB	4 GB	4 GB

NOTE:

- Memory channel 1 includes slots 1-4 (on board) and 17-21 (expansion board #1)
- Memory channel 2 includes slots 5-8 (on board) and 21-24 (expansion board #2)
- Memory channel 3 includes slots 9-12 (on board) and 25-28 (expansion board #3)
- Memory channel 4 includes slots 13-16 (on board) and 29-32 (expansion board #4)

HP ProLiant DL580 G5 - For 32 DIMM configurations with the standard shipping 8 GB of memory

Standard Memory

8 GB PC2-5300 Fully Buffered DIMMs (DDR2-667) (4 x 2 GB)

All HP ProLiant DL580 G5 systems come standard with 4 banks of memory sockets spanning 4 memory channels for a total of 16 DIMM sockets on board memory The optional DL580 G5 Memory Expansion Boards Option adds an additional 16 DIMM sockets, which brings the Dl580 G5 to a total of 32 DIMM sockets.

Upgrading Memory and Memory Interleaving

To achieve maximum memory performance and flexibility, the HP ProLiant DL580 G5 requires memory to be upgraded in groups of four identical FBDIMMs populated across the four memory channels. In simple terms, the two FBDIMM locations at xC and the two xD locations must be populated with four identical part numbered FBDIMMs. Memory population continues by populating locations xE and xF, then xG and xH. FBDIMM architecture does not allow any gaps in this sequence such that if locations xE and xF were populated and xC and xD were not, the memory at xE and xF would not be recognized by the system.

Standard Memory Plus Optional Memory

Up to 232 GB memory is available with the standard memory of 8 GB and the optional installation of 1 GB, 2 GB, 4 GB, and/or 8 GB PC2-5300 Fully Buffered DIMMs in all embedded DIMM sockets as well as the memory expansion boards slots. . One possible configuration is shown below, in which 56 GB is added to the standard 8 GB for a total of 64 GB.

Standard Memory Replaced with Optional Memory

Up to 256 GB of memory is available with the removal of the standard 8 GB of memory and the optional installation of PC2-5300 Fully Buffered DIMMs in all the embedded slots as well as the memory expansion boards slots.

Memory

Memory		Embedded Slots							
		1	2	3	4	5	6	7	8
		1A	2C	3E	4G	5A	6C	7E	8G
Standard	8 GB	2 GB	Empty	Empty	Empty	2GB	Empty	Empty	Empty
Standard + Optional	Maximum: 232GB Shown: 64 GB	2 GB	2 GB	2 GB	2 GB	2 GB	2 GB	2 GB	2 GB
Maximum	256 GB	8 GB	8 GB	8 GB	8 GB	8 GB	8 GB	8 GB	8 GB

Memory		Embedded Slots							
		9	10	11	12	13	14	15	16
		9B	10D	11F	12H	13B	14D	15F	61H
Standard	8 GB	2 GB	Empty	Empty	Empty	2 GB	Empty	Empty	Empty
Standard + Optional	Maximum: 232 GB Shown: 64 GB	2 GB	2 GB	2 GB	2 GB	2 GB	2 GB	2 GB	2 GB
Maximum	256 GB	8 GB	8 GB	8 GB	8 GB	8 GB	8 GB	8 GB	8 GB

Expansion Board Memory		Optional DL580 G5 Memory Expansion Boards Option Slots							
		17	18	19	20	21	22	23	24
		1A	2B	3C	4D	1A	2B	3C	4D
Standard	8 GB	Empty	Empty	Empty	Empty	Empty	Empty	Empty	Empty
Standard + Optional	Maximum: 232 GB Shown: 64 GB	2 GB	2 GB	2 GB	2 GB	2 GB	2 GB	2 GB	2 GB
Maximum	256 GB	8 GB	8 GB	8 GB	8 GB	8 GB	8 GB	8 GB	8 GB

Expansion Board Memory		Optional DL580 G5 Memory Expansion Boards Option Slots							
		25	26	27	28	29	30	31	32
		1A	2B	3C	4D	1A	2B	3C	4D
Standard	8 GB	Empty	Empty	Empty	Empty	Empty	Empty	Empty	Empty
Standard + Optional	Maximum: 232 GB Shown: 64 GB	2 GB	2 GB	2 GB	2 GB	2 GB	2 GB	2 GB	2 GB
Maximum	256 GB	8 GB	8 GB	8 GB	8 GB	8 GB	8 GB	8 GB	8 GB

NOTE:

- Memory channel 1 includes slots 1-4 (on board) and 17-21 (expansion board #1)
- Memory channel 2 includes slots 5-8 (on board) and 21-24 (expansion board #2)
- Memory channel 3 includes slots 9-12 (on board) and 25-28 (expansion board #3)
- Memory channel 4 includes slots 13-16 (on board) and 29-32 (expansion board #4)

The following memory options are available from HP:

HP Memory	HP 2GB Fully Buffered DIMM PC2-5300 2x1GB DDR2 Memory Kit	397411-B21
	HP 2GB Fully Buffered DIMM PC2-5300 2x1GB Low Power DDR2 Memory Kit	461826-B21
	HP 4GB Fully Buffered DIMM PC2-5300 2x2GB DDR2 Memory Kit	397413-B21
	HP 4GB Fully Buffered DIMM PC2-5300 2x2GB Low Power DDR2 Memory Kit	461828-B21
	HP 8GB Fully Buffered DIMM PC2-5300 2x4GB DDR2 Memory Kit	397415-B21
	HP 8GB Fully Buffered DIMM PC2-5300 2x4GB Low Power DDR2 Memory Kit	466440-B21
	HP 16GB Fully Buffered DIMM PC2-5300 2x8GB DDR2 Memory Kit	413015-B21
	HP 64GB Fully Buffered DIMM PC2-5300 8x8GB DDR2 Memory Kit	495604-B21
	Memory Board Upgrade Option	
	DL580 G5 memory expansion boards option NOTE: This option consists of 4 memory expansion boards with 4 DIMM sockets each for a total of 16 additional DIMM sockets. This brings the DL580G5 to a total of 32 DIMM sockets. NOTE: Memory Option Kits include Low Power DIMMs. For more information on ProLiant Energy Efficient Features, please visit: http://h18004.www1.hp.com/products/servers/platforms/energyefficient/.	452179-B21

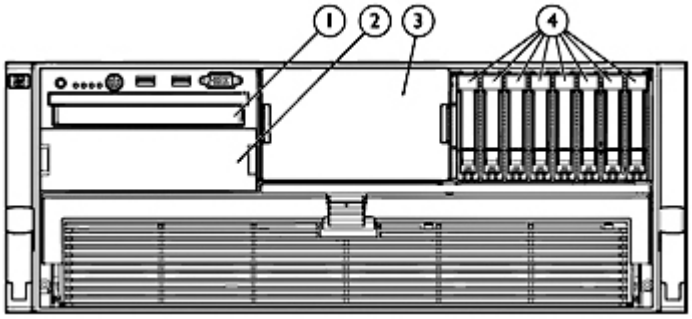

1 Slimline media bay

2 Half-height bay

3 Second SAS drive bay (supports up to 8 additional SFF SAS/SATA drives)

4 8 SFF hot-plug SAS/SATA drives

Drive Support

	Quantity Supported	Position Supported	Controller
Slimline Drives			
HP 8X/24X SlimLine DVD-ROM Drive	1	1	Integrated IDE
HP Slim SATA DVD-ROM Optical Drive	1	1	Integrated SATA
HP Slim SATA DVD RW Optical Drive	1	1	Integrated SATA

Hard Drives

NOTE: The components of a storage subsystem (e.g. the drive, the HBA/controller, firmware, and the server backplane) should operate at the same data transfer rate or the system bandwidth will be negotiated down to an acceptable level for all components.

NOTE: Hard drives have either a one year or three year warranty; refer to the specific hard drive QuickSpecs for details.

SAS Hot Plug SFF (2.5-inch) Enterprise (ENT) Drives

	Quantity Supported	Position Supported	Controller
300GB 6G SAS 10K DP 146GB 6G SAS 15K DP 146GB 3G SAS 15K DP 72GB 6G SAS 15K DP	Up to 16	3,4	HP Smart Array E200/128 BBWC Controller HP Smart Array E500/256 MB Controller HP Smart Array P400i/256 MB Controller HP Smart Array P400i/512 MB BBWC Controller HP Smart Array P600/256 BBWC Controller HP Smart Array P800/512 BBWC Controller HP Smart Array P212/Zero Memory Controller HP Smart Array P212/ 256 MB Controller HP Smart Array P410/256 MB Controller HP Smart Array P410/512 MB BBWC Controller HP Smart Array P411/256 MB Controller HP Smart Array P411/512 MB BBWC Controller

SAS Hot Plug SFF (2.5-inch) Midline (MDL) Drives

Storage

	Quantity Supported	Position Supported	Controller
500GB 6G SAS 7.2K DP	Up to 16	3,4	HP Smart Array E200/128 BBWC Controller HP Smart Array E500/256 MB Controller HP Smart Array P400i/256 MB Controller HP Smart Array P400i/512 MB BBWC Controller HP Smart Array P600/256 BBWC Controller HP Smart Array P800/512 BBWC Controller HP Smart Array P212/Zero Memory Controller HP Smart Array P212/ 256 MB Controller HP Smart Array P410/256 MB Controller HP Smart Array P410/512 MB BBWC Controller HP Smart Array P411/256 MB Controller HP Smart Array P411/512 MB BBWC Controller

SATA Hot Plug SFF (2.5-inch) Midline (MDL) Drives

	Quantity Supported	Position Supported	Controller
500GB 3G SATA 7.2K 160GB 3G SATA 7.2K	Up to 16	3,4	HP Smart Array E200/128 BBWC Controller HP Smart Array E500/256 MB Controller HP Smart Array P400i/256 MB Controller HP Smart Array P400i/512 MB BBWC Controller HP Smart Array P600/256 BBWC Controller HP Smart Array P800/512 BBWC Controller HP Smart Array P212/Zero Memory Controller HP Smart Array P212/ 256 MB Controller HP Smart Array P410/256 MB Controller HP Smart Array P410/512 MB BBWC Controller HP Smart Array P411/256 MB Controller HP Smart Array P411/512 MB BBWC Controller

SATA Hot Plug SFF (2.5-inch) Entry (ETY) Drives

	Quantity Supported	Position Supported	Controller
250GB 3G SATA 5.4K 120GB 1.5G SATA 5.4K	Up to 16	3,4	HP Smart Array E200/128 BBWC Controller HP Smart Array E500/256 MB Controller HP Smart Array P400i/256 MB Controller HP Smart Array P400i/512 MB BBWC Controller HP Smart Array P600/256 BBWC Controller HP Smart Array P800/512 BBWC Controller HP Smart Array P212/Zero Memory Controller HP Smart Array P212/ 256 MB Controller HP Smart Array P410/256 MB Controller HP Smart Array P410/512 MB BBWC Controller HP Smart Array P411/256 MB Controller HP Smart Array P411/512 MB BBWC Controller

Storage

SATA Hot Plug Midline (MDL) Solid State Drives

	Quantity Supported	Position Supported	Controller
60GB 3.0G SATA SSD 120GB 3.0G SATA SSD	Up to 16	3,4	HP Smart Array P212/Zero Memory Controller HP Smart Array P212/ 256 MB Controller HP Smart Array P410/256 MB Controller HP Smart Array P410/512 MB BBWC Controller HP Smart Array P411/256 MB Controller HP Smart Array P411/512 MB BBWC Controller

External Storage

	Quantity Supported	Position Supported	Host Controller or Adapter
50 Modular Smart Array	Up to 26	External	HP Smart Array P600/256 BBWC Controller HP Smart Array P800/512 BBWC Controller
60 Modular Smart Array	Up to 4	External	HP Smart Array P600/256 BBWC Controller
	Up to 8	External	HP Smart Array E500/256MB Controller HP Smart Array P212/Zero Memory Controller HP Smart Array P212/ 256 MB Controller HP Smart Array P411/256 MB Controller HP Smart Array P411/512 MB BBWC Controller
70 Modular Smart Array	Up to 2	External	HP Smart Array P600/256 BBWC Controller
	Up to 4	External	HP Smart Array E500/256MB Controller HP Smart Array P800/512 BBWC Controller HP Smart Array P212/Zero Memory Controller HP Smart Array P212/ 256 MB Controller HP Smart Array P411/256 MB Controller HP Smart Array P411/512 MB BBWC Controller

Maximum Storage Capacity - (External SAS Enclosure Attached)

Internal	8.0TB (16 x 500GB SFF SAS Drives)
External	960TB (80 MSA60 enclosures x 12 drive bays each x 1TB SATA Drives)

Tape and Disk Backup

NOTE: For the complete range of StorageWorks tape drives, autoloaders, libraries and media, including the internal fitting models, see: http://www.hp.com/go/tape. For the complete range of StorageWorks D2D Backup Systems see: http://www.hp.com/go/d2d. For the complete range of StorageWorks RDX drives and media see: http://www.hp.com/go/rdx. For hardware and software compatibility of HP StorageWorks disk and tape backup products see: http://www.hp.com/go/connect.

	Position Supported	Controller	Controller Part Number
HP StorageWorks SCSI Tape Drives LTO-1 Ultrium 232 LTO-2 Ultrium 448	Internal or External	HP SC11Xe Ultra320 Single Channel/ PCIe x4 SCSI Host Bus Adapter	412911-B21

Storage

LTO-3 Ultrium 920 LTO-3 Ultrium 960 LTO4 Ultrium 1760 LTO-4 Ultrium 1840 DAT 40 DAT 72 DAT 160		NOTE: Please check the full compatibility information at: http://www.hp.com/go/connect	
HP StorageWorks SCSI Rack Mount Kits 1U Rack-Mount Kit 3U Rack-Mount Kit	External	HP SC11Xe Ultra320 Single Channel/ PCIe x4 SCSI Host Bus Adapter	412911-B21
HP StorageWorks USB Tape Drives DAT 40 DAT 72 DAT 160 DAT 320	Internal or External	USB 2.0 Port	N/A
HP StorageWorks USB Rack Mount Kits 1U USB Rack-Mount Kit	External	USB 2.0 Port	N/A
HP StorageWorks SAS Tape Drives DAT 160 DAT 320 LTO-2 Ultrium 448 LTO-3 Ultrium 920 LTO-4 Ultrium 1760 LTO-4 Ultrium 1840 LTO-5 Ultrium 3000 LTO-5 Ultrium 3280	Internal or External	HP Modular Smart Array SC44Ge 1-ports Int/1-ports Ext PCIe x8 SAS Host Bus Adapter NOTE: Please check the full compatibility information at: http://www.hp.com/go/connect	416096-B21
HP StorageWorks SAS Rack Mount Kits 1U Rack-Mount Kit 3U Rack-Mount Kit	External	HP Modular Smart Array SC44Ge 1-ports Int/1-ports Ext PCIe x8 SAS Host Bus Adapter NOTE: Please check the full compatibility information at: http://www.hp.com/go/connect	416096-B21
HP StorageWorks SCSI Tape Autoloaders DAT 72x10 Autoloader 1/8 G2 Autoloader	External	HP SC11Xe Ultra320 Single Channel/ PCIe x4 SCSI Host Bus Adapter NOTE: Please check the full compatibility information at: http://www.hp.com/go/connect	412911-B21

Storage

HP StorageWorks SCSI Tape Libraries MSL2024 MSL4048 MSL8096 MSL6000	External	HP U320e SCSI Dual Channel Controller NOTE: Please check the full compatibility information at: http://www.hp.com/go/connect	AH627A
HP StorageWorks SAS Tape Autoloaders and Libraries 1/8 G2 Autoloader MSL2024 MSL4048 MSL8096	External	HP Modular Smart Array SC44Ge 1-ports Int/1-ports Ext PCIe x8 SAS Host Bus Adapter NOTE: Please check the full compatibility information at: http://www.hp.com/go/connect	416096-B21
HP StorageWorks Fibre Channel Tape Libraries MSL2024 MSL4048 MSL8096 MSL6000	External	Please consult the EBS connectivity matrix at: http://www.hp.com/go/ebs for connectivity information and the supported Fibre Channel HBAs shown in this QuickSpecs.	N/A
HP StorageWorks USB RDX Removable Disk Backup System RDX160 RDX320 RDX500 RDX750 RDX1TB	Internal or External	USB 2.0 Port	N/A
HP StorageWorks D2D Backup Systems, iSCSI D2D2500i D2D4000i	External	Embedded Network Controller. If the server requires a hardware iSCSI initiator, the QLogic QLA4050 Host Bus Adapter is recommended.	N/A
HP StorageWorks D2D Backup Systems, Fibre Channel D2D4000fc	External	Direct server attach is not supported, requires connection via SAN fabric. See: http://www.hp.com/go/connect	N/A

Power Specifications

HP 1200W 12V Hot Plug AC Power Supply							
Part Number	437572-B21						
Input Voltage Range (V rms)	100 to 240						
Frequency Range (Nominal) (Hz)	50/60						
Nominal Input Voltage (Vrms)	100	120	200	208	220	230	240
Maximum Rated Output Wattage Rating	800	900	1200	1200	1200	1200	1200
Nominal Input Current (A rms)	9.7	9.0	7.0	6.8	6.4	6.1	5.9
Maximum Rated Input Wattage Rating (Watts)	930	1034	1348	1348	1348	1348	1348
Maximum Rated VA (Volt-Amp)	970	1079	1406	1406	1406	1406	1406
Efficiency (%)	86	87	89	89	89	89	89
Power Factor	0.97						
Leakage Current (mA)	0.42	0.50	0.83	0.87	0.92	0.96	1.00
Maximum Inrush Current (A peak)	30						
Maximum Inrush Current duration (mS)	20						
Maximum British Thermal Unit Rating (BTU-Hr)	3174	3530	4600	4600	4600	4600	4600

HP 1200W -48V DC Common Slot Power Supply			
Part Number	437573-B21		
Input Voltage Range (V rms)	36-72		
Frequency Range (Nominal) (Hz)	DC		
Nominal Input Voltage (Vrms)	36	48	72
Maximum Rated Output Wattage Rating	1200	1200	1200
Nominal Input Current (A rms)	38	28	19
Maximum Rated Input Wattage Rating (Watts)	1380	1350	1365
Maximum Rated VA (Volt-Amp)	1380	1350	1365
Efficiency (%)	87	89	88
Power Factor	N/A		
Leakage Current (mA)	N/A		
Maximum Inrush Current (A peak)	20	25	35
Maximum Inrush Current duration (mS)	1	1	3
Maximum British Thermal Unit Rating (BTU-Hr)	4713	4610	4662

Power Specifications

NOTE: To review typical system power ratings use the HP Power Advisor which is available online located at url: www.hp.com/go/proliant-energy-efficient or www.hp.com/go/hppoweradvisor

To drill down to calculators:

- Click on: "ProLiant Servers"
- Click on the Server of interest. Example: DL580 G5
- Click on: "Power Calculator" link. (You may need to scroll down to see it)
- There are certain Dual-Core, lowline, max configurations that are not supported. All highline configurations are supported. Consult the Power Calculator to determine if your lowline configuration is supported.

NOTE: If customers require a local power cord, they can check the power cord matrix for the appropriate county specific sku. Please see the following power cord matrix for details: http://www.hp.com/go/powercordmatrix

Table 1 outlines the default DL580 G5 system power redundancy behavior.

Default - Power Supply Override Disabled (2+2 Redundancy)						
Number of Power Supplies	Hi-Line (208VAC and higher)		Low-Line (115VAC and lower)			
	1 to 4 Processors		1 to 2 Processors		3 to 4 Processors	
	Supported at POST	Redundant	Supported at POST	Redundant	Supported at POST	Redundant
1	No	No	No	No	No	No
2	Yes	No	Yes	No	Halt/F9[1]	No
3	Yes	DC output[2]	Yes	DC output[2]	Yes	DC output[2]
4	Yes	Yes	Yes	Yes	Yes	See note[3]

Table 1

NOTES:

- The server will halt with a 'power not sufficient" message when it has three or more processors and only two power supplies. This is a caution to customers who wish to run in this configuration that it is possible to exceed the power output of two supplies when the system is heavily loaded and connected to low-line AC. See note 3 below.
- DC output - in this configuration if one supply fails the DC output power of the two remaining supplies will be sufficient to keep the server running. If one of the AC input feeds fail (in a two AC power feed per rack environment) this configuration can not guarantee redundancy if the feed supplying two of the three power supplies fails.
- In a fully optioned server with four power supplies and four 130 Watt processors it is possible to exceed the rated output power of two supplies when powered by low-line AC (110 VAC). In this scenario the system is non-redundant. If one of the two AC power feeds fail and brings down two power supplies the remaining two supplies may not supply enough power to keep the system running. Customers who are running low line with configurations approaching fully optioned servers should check their power redundancy using the Active Answers Power Calculator.

Power Specifications

Table 2 outlines the power redundancy behavior of the DL580 G5 when this option is set in RBSU. Customers interested in this option need to first consult the Active Answers Power Calculator to confirm their power is redundant with their system configuration.

Power Supply Override Enabled[1] (1+ Redundancy) Customers must consult the power calculator with their system configuration to verify if the server configuration is redundant before enabling this option.						
Number of Power Supplies	Hi-Line (208VAC and higher)		Low-Line (115VAC and lower)			
	1 to 4 Processors		1 to 2 Processors		3 to 4 Processors	
	Supported at POST	Redundant	Supported at POST	Redundant	Supported at POST	Redundant
1	Yes [2]	No	Yes [2]	No	Yes [2]	No
2	Yes	Consult Power Calculator	Yes	Consult Power Calculator	Yes	Consult Power Calculator
3	Yes		Yes		Yes	
4	Yes		Yes		Yes	

Table 2

NOTES:

- When this selection has been set in RBSU, a "Power Supply Requirements Override has been enabled" message will be displayed during POST.
- In a one supply configuration, the external health LED will flash to warn that system is not redundant.

System Unit Rack	**Dimensions** (H x W x D) (with bezel)	6.94 x 19.0 x 26.5 in (17.6 x 48.3 x 67.3 cm)	
	Weight (approximate)	Maximum (all hard drives, power supplies, and processors installed)	100.0 lb (45.4 kg)
		Minimum (one hard drive, power supply, and processor installed)	71.0 lb (32.2 kg)
	Input Requirements (per power supply)	Rated Line Voltage	90 - 132 VAC, 180 - 264 VAC
		Rated Input Current	10 A (at 100 VAC), 7.8 A (at 200 VAC)
		Rated Input Frequency	47 to 63 Hz
		Rated Input Power	964 W (at 100 VAC), 1412 W (at 240 VAC)
	BTU Rating	Maximum	3355 BTU/hr (at 100 VAC), 4914 BTU/hr (at 200 VAC)
	Power Specifications	NOTE: To review typical system power ratings use the HP Power Advisor which is available online located at url: www.hp.com/go/proliant-energy-efficient or www.hp.com/go/hppoweradvisor - Click on the system of interest. Example: DL580 G5 - Follow the instructions of the next screens.	
	Power Supply Output (per power supply)	Rated Steady-State Power	800 W (at 100 VAC), 1200 W (at 200 VAC)
		Maximum Peak Power	800 W (at 100 VAC), 1200 W (at 200 VAC)
	System Inlet Temperature	Operating	10° to 35°C (50° to 95°F) at sea level with an altitude derating of 1.0°C per every 305 m (1.8°F per every 1000 ft) above sea level to a maximum of 3050 m (10,000 ft), no direct sustained sunlight. Maximum rate of change is 10°C/hr (18°F/hr). The upper limit may be limited by the type and number of options installed. System performance may be reduced if operating with a fan fault or above 30°C (86°F).
		Non-operating	-30° to 60°C (-22° to 140°F). Maximum rate of change is 20°C/hr (36°F/hr).
	Relative Humidity (non-condensing)	Operating	10 to 90% relative humidity (Rh), 28°C (82.4°F) maximum wet bulb temperature, non-condensing.
		Non-operating	5 to 95% relative humidity (Rh), 38.7°C (101.7°F) maximum wet bulb temperature, non-condensing.

	Altitude	Operating	3050 m (10,000 ft). This value may be limited by the type and number of options installed. Maximum allowable altitude change rate is 457 m/min (1500 ft/min).
		Non-operating	9144 m (30,000 ft). Maximum allowable altitude change rate is 457 m/min (1500 ft/min).
	Acoustic Noise	Listed are the declared A-Weighted sound power levels (LWAd) and declared average bystander position A-Weighted sound pressure levels (LpAm) when the product is operating in a 23°C ambient environment. Noise emissions were measured in accordance with ISO 7779 (ECMA 74) and declared in accordance with ISO 9296 (ECMA 109).	
		Idle	
		L WAd	6.9 B
		L pAm	52 dBA
		Operating	
		L WAd	6.9 B
		L pAm	52 dBA
	Emissions Classification (EMC)	FCC Rating	Class A
		Normative Standards	CISPR 22; EN55022; EN55024; FCC CFR 47, Pt 15; ICES-003; CNS13438; GB9254; K22;K24; EN 61000-3-2; EN 61000-3-3; EN 60950-1; IEC 60950-1
		NOTE: Product conformance to cited product specifications is based on sample (type) testing, evaluation, or assessment. This product or family of products is eligible to bear the appropriate compliance logos and statements.	
Slimline CD-RW/DVD-ROM 24X Combo Drive (Multibay)	Shipping Dimensions	13.88 x 11.38 x 9.25 in (35.26 x 28.91 x 23.50 cm)	
	Shipping Weight	5 lb (2.27 kg)	
	Disk	Applicable Disk	DVD-ROM DVD-R (Read Only) 2.6 GB/side DVD-RAM (Read Only) 5.2 GB/side DVD-RAM (Read Only) CD-ROM Mode-1 data disc CD-ROM Mode-2 data disc CD Audio disc CD-Extra CD-RW CD-R CD Text PhotoCD CD-I (mode 2) CD-I Ready CD-Bridge

	Capacity	DVD-ROM	DVD-SL	4.7 GB/side
			DVD-DL	8.5 GB/side
			Double Sided	9.40 GB/side
		DVD-R		3.95 GB/side
		DVD-RAM		2.6 GB/side and 5.2 GB/
		CD-ROM	Mode-1	650 MB (550 MB)
			Mode-2	742 MB (640 MB)
	Block Size	DVD		2,048 bytes
		CD		2,352 (Mode-0)
				2352, 2340, 2336, 2048 bytes (Mode-1)
				2352, 2340, 2336, 2048 bytes (Mode-2)
	Diameter	120 mm (4.7 in), 80 mm (3.1 in)(with adapter at vertical mounting mode)		
Loading Mechanism	Tray type			
Interface	EIDE (ATAPI)			
Access Times (typical)	Random	DVD-ROM < 120 ms, CD-ROM < 110 ms		
	Full-Stroke	DVD-ROM < 240 ms, CD-ROM < 160 ms		
Audio Output Level (typical)	Line-out	CD 0.7 Vrms at 47 Kohms Load		
Data Transfer Rate (sustained)	DVD-ROM	Single Layer 10.8 MB/sec. Max.		
	DVD-RAM	2.77 MB/sec. Max		
	CD-ROM	7.2 MB/sec. Max.		
Cache Buffer	2 MB			
Spin-up Time (typical)	less than 10 seconds			
MTBF	120,000 Power On Hours (POH)			
Ambient Temperature	Operating	-22° to 140° F (-30° to 60° C)		
Relative Humidity	Operating	10% to 80%		
	Storage/Transportation	5% to 95%		
Dimensions	(HxWxD, maximum)	0.5 x 5.04 x 5.1 in (12.7 x 128 x 129.4 mm)		
Option Kit Contents	DVD-ROM drive with installation guide, warranty card, registration card			

Integrated Lights-Out 2 Standard (integrated on	**Architecture**	32-bit PCI-based health and remote management ASIC (Application Specific Integrated Circuit)

system board)	Processor	32-bit RISC processor core running at 66 MHz
	Upgradability	Option firmware upgradable via flash ROM.
	Video Support	Utilizes the host server's embedded video chip. Supports VGA/SVGA, 640 x 480 (256 to 16.7M colors), 800 x 600 (256 to 16.7M colors), 1024 x 768 (256 to 65K colors), 1280 x 1024 (256 colors)
	Interfaces	One Ethernet network connection (10/100 Mb/s)
	Memory	2-MB Flash ROM
		8-MB SDRAM
	Operating System Support	Microsoft Windows Server 2008 Standard Edition (32bit and 64bit)
		Microsoft Windows Server 2008 Enterprise Edition (32bit and 64bit)
		Microsoft Windows Server 2003 and Windows Server 2003 R2, and Windows Server 2003 for Extended Systems Standard Edition, Enterprise Edition
		Red Hat Enterprise Linux 5.4 (32bit and 64bit)
		SUSE LINUX Enterprise Server 11 (32bit and 64bit)
		SUSE LINUX Enterprise Server 10 (32bit and 64bit)
		VMware ESX 4.0
		VMware ESX 3.5.0
	Client Browser Support	Microsoft Internet Explorer 7
		Microsoft Internet Explorer 6
		Firefox 3.5 (on supported Windows and Linux systems)
		Firefox 3.0 (on supported Windows and Linux systems)
	iLO 2 Standard Features	Virtual Text Remote Console
		Virtual KVM
		Virtual Power Button Control
		Virtual UID Control
		Dedicated LAN Connectivity
		Secure access using web browser
		Secure access using Secure Shell (SSH) client
		Serial connectivity
		Automatic IP Configuration via DHCP/DNS/WINS
		Industry Standard 128-bit Secure Sockets Layer (SSL) Security
		IML and iLO2 Event Logging
		Support for up to 12 user accounts with customizable access privileges
	iLO 2 Advanced Features (optional)	Virtual Graphical Remote Console
		Virtual Floppy/USB Key drive
		Virtual CD-ROM drive
		Directory Services Integration
		Processor States Reporting
		Terminal Services Integration

NOTE: For more information on how to purchase the HP iLO Advanced optional licensed features, visit the iLO QuickSpecs located: www.hp.com/go/iLO

Smart Array P400i Controller	Disk Drive and Enclosure Interface	3G SAS (Serial Attached SCSI) 1.5G SATA (Serial Advanced Technology Attachment)	
	SAS Connectors	2 internal (SFF8484) x4 wide port connectors	
	Cache Memory Speed	DDR2-533MHz with 40 or 72-bit wide bus provides up to 4.2 GB/s maximum bandwidth.	
	Server Interface	x8 2.5G PCIe provides 2GB/s maximum bandwidth.	
	SAS Speed	x8 3G SAS provides 2.4GB/s maximum bandwidth.	
	Cache Memory	40-bit 256MB cache (72-bit 512MB module upgrades available); ECC protection, battery-backed, and transportable	
	Logical Drives Supported	Up to 32 logical drives	
	Maximum Logical Drive Capacity	2TB	
	Host Memory Addressing	64-bit, supporting greater than 4GB server memory space	
	RAID Support	RAID 6 with ADG (Advanced Data Guarding) requires Battery Backed Write Cache Upgrade RAID 5 (Distributed Data Guarding) RAID 1, 1+0 (Striping & Mirroring) RAID 0 (Striping)	
Two embedded NC373i Multifunction Gigabit Server Adapters	Network Interface	10Base-T/100Base-TX/1000Base-TX	
	Compatibility	IEEE 802.3 10Base-T IEEE 802.3ab 1000Base-T IEEE 802.3u 100Base-TX	
	Data Transfer Method	PCI-Express x4	
	Controller	BCM5708C	
	Network Transfer Rate	10Base-T (Half-Duplex)	10 Mb/s
		10Base-T (Full-Duplex)	20 Mb/s
		100Base-TX (Half-Duplex)	100 Mb/s
		100Base-TX (Full-Duplex)	200 Mb/s
		1000Base-TX (Half and Full-Duplex)	2000 Mb/s
	Connector	RJ-45	
	Cable Support	10Base-T	Categories 3, 4, or 5 UTP; up to 328 ft (100 m)
		100Base-TX	Category 5 or higher UTP; up to 328 ft (100 m)
		1000Base-TX	Category 5 or higher UTP; up to 328 ft (100 m)

Environment-friendly Products and Approach	End-of-life Management and Recycling	Hewlett-Packard offers end-of-life HP product return, trade-in, and recycling programs in many geographic areas. For trade-in information, please go to http://www.hp.com/go/green. To recycle your product, please go to: http://www.hp.com/go/green or contact your nearest HP sales office. Products returned to HP will be recycled, recovered or disposed of in a responsible manner. The EU WEEE directive (2002/95/EC) requires manufacturers to provide treatment information for each product type for use by treatment facilities. This information (product disassembly instructions) is posted on the Hewlett Packard web site at: http://www.hp.com/go/green. These instructions may be used by recyclers and other WEEE treatment facilities as well as HP OEM customers who integrate and re-sell HP equipment.

© Copyright 2010 Hewlett-Packard Development Company, L.P.

The information contained herein is subject to change without notice.

Microsoft and Windows NT are US registered trademarks of Microsoft Corporation. Unix is a registered trademark of The Open Group.

Intel, the Intel logo, Xeon and Xeon Inside are trademarks of Intel Corporation in the U.S. and other countries.

The only warranties for HP products and services are set forth in the express warranty statements accompanying such products and services. Nothing herein should be construed as constituting an additional warranty. HP shall not be liable for technical or editorial errors or omissions contained herein.

For hard drives, 1GB = 1 billion bytes. Actual formatted capacity is less.