RETIRED: This document has been officially retired, and the base products listed herein are now considered obsolete and are no longer available for sale. Consequently, the information contained within may no longer be current. This document is provided exclusively for reference and informational purposes.

Overview

HP ProLiant DL580 Gen7

Traditionally, mission-critical RAS (Reliability, Availability and Serviceability) features have been associated with RISC (Reduced Instruction Set Computing) systems. HP has designed an eco-system of RAS functionalities that has raised the bar for the HP ProLiant DL580 G7. The HP ProLiant DL580 G7 continues to deliver best-in-class HP performance, manageability, and reliability features with the latest Intel processor technology and it is the ideal choice for customers that are ready to deploy Large Databases that require scale-up compute processing, large memory and I/O intensive applications.

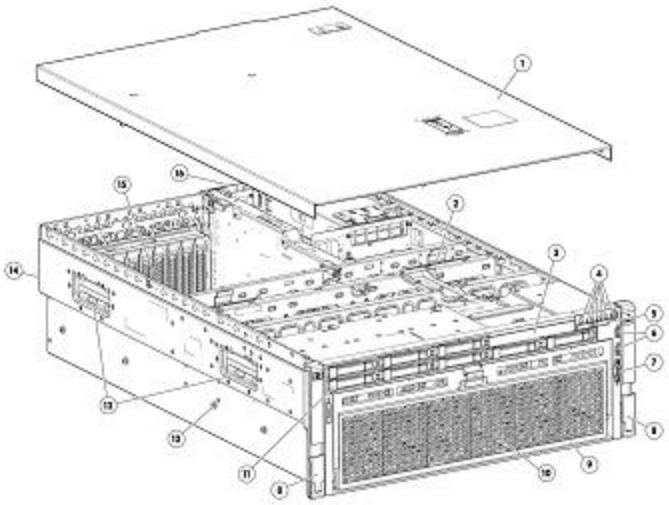

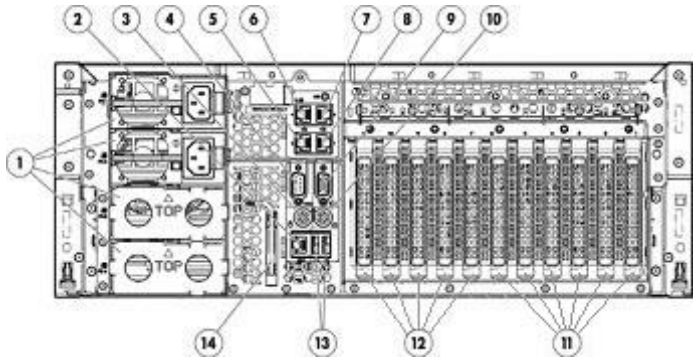

Front View:

1. Quick Removal Access Panel
2. 4 Hot Plug Redundant Fans Standard on all models
3. HP Slim SATA DVD ROM Optical Drive
4. Front Panel LED Display and Power Button
5. Slide-out Systems Insight Display
6. Two front accessible USB 2.0 ports
7. One front video port
8. Quick release levers for fast server access
9. Front accessible Processor and memory drawer
10. Support for up to four Intel® Xeon® Processors
11. Support for up to 8 Small Form-Factor (SFF) SAS, Serial ATA (SATA) or SSD drives
12. Universal Tool-less "Snap In" Sliding Rail Solution
13. Server Lifting Handles
14. 4U (7" Height) Rack Form Factor
15. Up to 11 slots supported; all full-length/full-height

Rear View:

1. Hot Plug Redundant Power Supplies (2 or 4 depending on the model)
2. Integrated Lights-Out 3 port
3. Mouse port
4. Serial Port
5. Gigabit NIC Ports
6. Gigabit NIC Ports
7. Gigabit NIC Ports
8. Gigabit NIC Ports
9. Video Port
10. Keyboard port
11. PCI-Express or PCI-X option (slots 1-6)
12. PCI-Express slots (slots 7-11)
13. Two USB ports
14. Service tool

What's New

- Updating supported options.

Standard Features

NOTE: For the Standard Features shipped in the "Factory Integrated Models", please see the "Configuration Information - Factory Integrated Models" section.

Processor One or more of the following depending on model	**Ten-Core Processors** Intel® Xeon® E7-4870 (2.40GHz/10-core/30MB/130W) Processor Intel® Xeon® E7-4860 (2.26GHz/10-core/24MB/130W) Processor Intel® Xeon® E7-4850 (2.00GHz/10-core/24MB/130W) Processor Intel® Xeon® E7-8867L (2.13GHz/10-core/30MB/105W) Processor **Eight-Core Processors** Intel® Xeon® E7-8837 (2.67GHz/8-core/24MB/130W) Processor Intel® Xeon® E7-4830 (2.13GHz/8-core/24MB/105W) Processor Intel® Xeon® E7-4820 (2.0GHz/8-core/18MB/105W) Processor Intel® Xeon® X7560 (2.26GHz/8-core/24MB/130W) Processor Intel® Xeon® X7550 (2.0GHz/8-core/18MB/130W) Processor Intel® Xeon® L7555 (1.86GHz/8-core/24MB/95W) Processor **Six-Core Processors** Intel® Xeon® E7-4807 (1.86GHz/6-core/18MB/95W) Processor Intel® Xeon® E7540 (2.0GHz/6-core/18MB/105W) Processor Intel® Xeon® E7530 (1.86GHz/6-core/12MB/105W) Processor Intel® Xeon® X7542 (2.66GHz/6-core/18MB/130W) Processor **Quad-Core Processors** Intel® Xeon® E7520 (1.86GHz/4-core/18MB/95W) Processor **NOTE:** New Intel Microarchitecture with Intel Virtualization Technology FlexMigration. Industry Standard Intel® 7500 Chipset with four high-speed interconnects up to 6.4GT/s.
Cache Memory One of the following depending on model	30MB (1 x 30MB) Level 3 cache **NOTE:** For E7-8867L and E7-4870 Processors 24MB (1 x 24MB) Level 3 cache **NOTE:** For E7-8837, E7-4860, E7-4850, E7-4830, X7560, and L7555 Processors. 18MB (1 x 18MB) Level 3 cache **NOTE:** For E7-4820, E7-4807, X7550, E7540, X7542, and E7520 Processors. 12MB (1 x 12MB) Level 3 cache **NOTE:** For E7530 Processor.
Chipset	Industry Standard Intel® 7500 Chipset **NOTE:** For more information regarding Intel chipsets, please see the following URL: http://www.intel.com/products/server/chipsets/
Upgradeability	Upgradeable to quad (4) processors
Memory Protection	Advanced ECC Double Data Device Correction - DDDC **NOTE:** Intel® Xeon® E7-48xx/88xx processor series powered only. Mirrored Memory Online Spare Memory
Memory	Type PC3-10600R DIMMs (DDR3)

Standard Features

One of the following depending on Model	Standard (2P Models)	16GB (4 x 4GB)
	Standard (4P Model - E7540)	32GB (8 x 4GB)
	Standard (4P Models - X7560, X7550)	64GB (16 x 4GB)
	Standard (2P Models - E7-4830, E7-4807)	64 (8 x 8GB)
	Standard (4P Models - E7-4870, E7-4850)	128GB (16 x 8GB)
	Maximum	2TB (64 x 32GB)* * Intel® Xeon® Processor E7 series powered only, 1TB max on 7500 series

Network Controller	HP NC375i Integrated Quad Port Gigabit Server Adapter **NOTE:** Optional Dual Port 10GbE upgrade (replaces two 1G ports)

Expansion Slots

NOTE: Up to 11 slots supported; all full-length/full-height. Standard: 2 PCI-E 2.0 x8, 3 PCI-E 2.0 x4.

NOTE: The primary video controller needs to be located in the Main I/O board slots 7-11 providing video during boot. A video controller installed in an I/O expansion slot 1-6 cannot be the primary controller. It will not have video during boot but will provide video once OS and drives load.

Expansion Slots (Main IO Board standard)	Expansion Slot #	Technology	Width	Connector Width*	Bus / Dev Number**	Form Factor	Notes
	1	N/A	N/A	N/A	N/A	N/A	N/A
	2	N/A	N/A	N/A	N/A	N/A	N/A
	3	N/A	N/A	N/A	N/A	N/A	N/A
	4	N/A	N/A	N/A	N/A	N/A	
	5	N/A	N/A	N/A	N/A	N/A	
	6	N/A	N/A	N/A	N/A	N/A	
	7	PCI Express Gen2	x4	x8	0/0A	FH/FL	
	8	PCI Express Gen2	x4	x8	0/09	FH/FL	
	9	PCI Express Gen2	x8	x16	0/07	FH/FL	
	10	PCI Express Gen2	x4	x8	0/01	FH/FL	
	11	PCI Express Gen2	x8	x16	0/05	FH/FL	

* Default bus assignment. Inserting cards with PCI bridges may alter the actual bus assignment number.

** Slots are enumerated differently based on OS. MS OS's enumerate from lowest to highest Device ID by bus (starting with the lowest bus).

FL= Full length; FH = Full height; LP = low-profile.

Expansion Slots

Standard Features

Expansion Slots with IO Expander (combination PCI-X, PCI-e and 300W GPU	Expansion Slot #	Technology	Width	Connector Width*	Bus / Dev Number**	Form Factor	Notes
	1	PCI-X	64-bit	N/A	82/01	FH/FL	100MHz
	2	PCI-X	64-bit	N/A	82/02	FH/FL	100MHz
	3	PCI Express Gen2	x16	x16	80/07	FH/FL	
	4	PCI Express Gen2	x4	x8	80/01	FH/FL	
	5	N/A	N/A	N/A	N/A	N/A	N/A
	6	PCI Express Gen2	x16	x16	80/03	FH/FL	
	7	PCI Express Gen2	x4	x8	0/0A	FH/FL	
	8	PCI Express Gen2	x4	x8	0/09	FH/FL	
	9	PCI Express Gen2	x8	x16	0/07	FH/FL	
	10	PCI Express Gen2	x4	x8	0/01	FH/FL	
	11	PCI Express Gen2	x8	x16	0/05	FH/FL	

* Default bus assignment. Inserting cards with PCI bridges may alter the actual bus assignment number.
** Slots are enumerated differently based on OS. MS OS's enumerate from lowest to highest Device ID by bus (starting with the lowest bus).
FL= Full length; FH = Full height; LP = low-profile.

Expansion Slots

Expansion Slots with I/O Expander (standard PCI-e option)	Expansion Slot #	Technology	Width	Connector Width*	Bus / Dev Number**	Form Factor	Notes
	1	PCI Express Gen1	x4	x8	80/00	FH/FL	
	2	PCI Express Gen2	x8	x16	80/09	FH/FL	
	3	PCI Express Gen2	x8	x16	80/07	FH/FL	
	4	PCI Express Gen2	x4	x8	80/01	FH/FL	
	5	PCI Express Gen2	x8	x16	80/05	FH/FL	
	6	PCI Express Gen2	x8	x16	80/03	FH/FL	
	7	PCI Express Gen2	x4	x8	0/0A	FH/FL	

Standard Features

8	PCI Express Gen2	x4	x8	0/09	FH/FL
9	PCI Express Gen2	x8	x16	0/07	FH/FL
10	PCI Express Gen2	x4	x8	0/01	FH/FL
11	PCI Express Gen2	x8	x16	0/05	FH/FL

* Default bus assignment. Inserting cards with PCI bridges may alter the actual bus assignment number.
** Slots are enumerated differently based on OS. MS OS's enumerate from lowest to highest Device ID by bus (starting with the lowest bus).
FL= Full length; FH = Full height; LP = low-profile.

Storage Controller
One of the following depending on Model

Base Models	HP Smart Array P410i/512 MB FBWC Controller
High Performance Models	HP Smart Array P410i/1G FBWC Controller

The Flash Backed Write Cache (FBWC) increases cache data retention capabilities from two days of existing battery backed write cache (BBWC) to infinite data retention.

- Standard on all Models
- Transportable data protection
- Increases overall controller performance

Internal Storage Devices

Diskette Drive	None
Optional Optical Drive	HP Slim SATA DVD ROM Optical Drive **NOTE:** Standard on Xeon Processor 7500 series models
Hard Drives	None ship standard
Hard Disk Drive Backplane	Internal SAS backplane supports up to eight SFF hard disk drives

Maximum Internal Storage

Hot Plug SFF SAS	9.6TB	8 x 1.2TB
Hot Plug SFF SATA	8.0TB	8 x 1TB
Hot Plug SFF SSD	960GB	8 x 120GB
Hot Plug SFF SAS SSD	6.4TB	8 x 800GB
Hot Plug SFF SATA SSD	3.2TB	8 x 400GB

NOTE: There is an extra internal SSD slot available as well.

Interfaces

Serial	1
Video	1 front; 1 rear
Network RJ-45	4
iLO 3 Remote Management	1
Keyboard	1
Pointing Device (Mouse)	1
SD Slot	1
USB 2.0 Ports	6 total: 2 front; 2 rear; 2 internal

Industry Standard ACPI 2.0. Compliant

Standard Features

Compliance	PCIE 2.0 Compliant PXE Support WOL Support Physical Address Extension (PAE) Support Microsoft® Logo certifications USB 2.0 Support	
Server Power Cords	**NOTE:** If customers require a local power cord, they can check the power cord matrix for the appropriate county specific sku. Please see the following power cord matrix for details: http://www.hp.com/go/powercordmatrix	
Power Supply One of the following depending on Model	HP 1200W Common Slot Platinum Hot Plug Power Supply Kit **NOTE:** Supported on the E7-4870, E7-4850, E7-4830 and E7-4807 Models HP 1200W Common Slot Silver Hot Plug Power Supply Kit **NOTE:** Supported on the X7560, X7550, E7540, E7530, E7520 Models **NOTE:** Two Hot Plug Power Supplies ship standard with 2P Models. Four Hot Plug Power Supplies ship standard with 4P Models. Power Supply Requirement Override **NOTE:** The HP ProLiant DL580 G7 does an inventory of the system configuration to determine what level of redundancy the power supply configuration supports based on some configuration assumptions. The level of redundancy will be reported during the system power on. For planning purposes you can use the Power Advisor (www.hp.com/go/proliant-energy-efficient or www.hp.com/go/hppoweradvisor) which is more accurate to determine the power requirements. Also, there is an RBSU override switch capability that allows the user to override the base setting if the Power Advisor indicates redundancy with their configuration.	
System Fans	Four Hot Plug redundant fans standard (3+1)	
Operating Systems and Virtualization Software Support for ProLiant Servers	Microsoft Windows Server Red Hat Enterprise Linux (RHEL) SUSE Linux Enterprise Server (SLES) Oracle Solaris VMware Citrix XenServer **NOTE:** For more information on HP's Certified and Supported ProLiant Servers for OS and Virtualization Software and latest listing of software drivers available for your server, please visit our Support Matrix at: http://www.hp.com/go/ossupport and our driver download page http://www.hp.com/support/DL580G7	
Graphics	Integrated ATI ES1000 with 64MB embedded video SDRAM Max Resolution 1280 x 1024 x 16M color	
Form Factor	Rack (4U = 7 inches), ships with Quick Deploy Sliding Rail System, an ambidextrous cable management arm and quick release levers for fast and easy serviceability and in-rack tool-less access to major components. Space saving form factor (4U) provides space efficiencies while providing maximum deployment flexibility.	
HP Insight Management	HP Service Pack for ProLiant	HP Service Pack for ProLiant (SPP) and HP Smart Update Manager (HP SUM) provide a comprehensive approach to firmware and system software maintenance. Together they provide better operating stability and ensure maximum uptime. The SPP will be updated at a predictable cadence,

typically coinciding with new HP server hardware launches. By enabling firmware to be updated online and integrating firmware and system software updates in one operation, HP SUM and the SPP offer faster updates of individual servers and dramatically faster updates of entire BladeSystem enclosures. Further improving system uptime and stability is the fact that HP provides 12 months of support for each Service Pack for ProLiant release.

The user experience around HP SUM and the SPP has been improved in several ways, starting with the web download. A single web page provides access to a single download containing both the latest version of HP SUM and the latest SPP. Optional smaller subsets with only specific types of servers or specific operating systems are offered to save on download time. The HP SUM application provides a straightforward, intuitive user interface that guides the user through the steps of discovery, analyses and update, providing comprehensive information on available updates, criticality and interdependencies. This information is also available in reports. By providing the option of multiple local or shared repositories which can be easily updated from hp.com, HP SUM provides the tools to optimize stability and consistency throughout the company. While HP SUM and the SPP recommend the combinations of firmware and system software that HP has found to be the best practice, the application gives customers the flexibility to set their own specific baseline.

The Service Pack for ProLiant has been rigorously tested with specific attention for interaction between firmware, drivers and agents both within the server as well as in interaction with the BladeSystem enclosure components (Onboard Administrator and Virtual Connect). This testing ensures the highest quality as well as providing the input for HP SUM to deploy updates taking into account all interdepencies, when determining the correct updates and order of update deployment.

NOTE: The Service Pack for ProLiant (which includes HP SUM) can be downloaded from www.hp.com/go/spp/download. More information can be found: http://www.hp.com/go/SmartUpdate, www.hp.com/go/spp and http://www.hp.com/go/hpsum

HP Insight Foundation

Insight Foundation is being baselined at version v8.70 which means the following:

- Its Media Kit (contains 2 SmartStart CDs, the Firmware DVD, and the Management DVD) will continue to ship with all supported ProLiant G7 or earlier BTO servers until the last supported server is no longer shipping.
- The Media Kit will not be updated past version 8.70.
- ProLiant G7 or earlier CTO servers are able to order the Media Kit with the understanding that the media is not updated. Please check specific server QuickSpecs for availability of CTO Kit.
- PSP and Firmware DVD downloads will be updated through 2Q 2012 at the HP Insight Foundation Suite for ProLiant downloads tab: http://www.hp.com/go/foundation

Customers are urged to use the replacement product, HP Service Pack for ProLiant, instead of Insight Foundation Suite which is found at these location:
www.hp.com/go/spp

Standard Features

		www.hp.com/go/spp/download
	HP Integrated Lights-Out (iLO)	HP Integrated Lights-Out (iLO) simplifies server setup, health monitoring, power and thermal control, and lights-out remote administration of ProLiant ML, DL, and BL servers. HP iLO functions without additional software and can be accessed from any location via a web browser. HP iLO works hand-in-hand with HP Systems Insight Manager, Insight Control and Insight Dynamics for ProLiant, helping customers unleash the value of the ProLiant platform and deliver the highest possible quality of IT service. For more information, visit: www.hp.com/go/iLO

Intelligent Manageability	HP Systems Insight Manager SmartStart Redundant ROM Remote Flash ROM Management Agents Integrated Management Log (IML) Automatic Server Recovery-2 (ASR-2) ROM-Based Setup Utility (RBSU) Dynamic Sector Repairing (with Smart Array Controllers) Drive Parameter Tracking (with Smart Array Controllers) Pre-Failure Warranty (covers processors, SAS hard drives and memory) Redundant/adaptive load balancing NIC Support Hot Spare Boot **NOTE:** Upon the event of a failed processor in a multi-processing environment, the system will automatically reboot and use the remaining good processor(s).
HP Insight Online	HP Insight Online is a new capability available through the HP Support Center portal for one stop, secure access to product and HP support information specific to your IT environment. Insight Online can automatically display devices remotely monitored by HP Insight Remote Support. With Insight Online's easy navigation you can efficiently track your IT support contracts and device status from anywhere and at anytime. www.hp.com/go/insightonline
HP Proactive Insight experience	Prevent problems with innovative, automated monitoring tools and proactive services. The HP Proactive Insight experience consist of using Insight Online, Insight Remote Support, and Proactive Care Support Service as one integrated solution. The Proactive Insight experience provides you with expert advice and personalized, cloud-based automated IT support, helping to prevent unplanned down time and solve problems quickly. For more information, visit: www.hp.com/go/proactiveinsightexperience
Security	Power-on password Keyboard password External USB port enable/disable Network Server Mode Serial interface control Administrator's password Removable optical drive
Warranty	This product is covered by a global limited warranty and supported by HP Services and a worldwide network of HP Authorized Channel Partners resellers. Hardware diagnostic support and repair is available for three years from date of purchase. Support for software and initial setup is available for 90 days from date of purchase. Enhancements to warranty services are available through HP Care Pack services or customized service agreements. Hard drives have either a one year or three year warranty; refer to the specific hard drive QuickSpecs for details.

Standard Features

NOTE: Server Warranty includes 3-Year Parts, 3-Year Labor, 3-Year Onsite support with next business day response. Warranty repairs may be accomplished through the use of Customer Self Repair (CSR) parts. These parts fall into two categories: 1) Mandatory CSR parts are designed for easy replacement. A travel and labor charge will result when customers decline to replace a Mandatory CSR part; 2) Optional CSR parts are also designed for easy replacement but may involve added complexity. Customers may choose to have HP replace Optional CSR parts at no charge. Additional information regarding worldwide limited warranty and technical support is available at: http://h18004.www1.hp.com/products/servers/platforms/warranty/index.html

Optional Features

HP Insight management	HP Insight Control	HP Insight Control, a product option, delivers essential infrastructure management that can help save time and money by making it easy to deploy, migrate, monitor, remote control, and optimize your IT infrastructure through a single, simple management console. For more information, see http://www.hp.com/go/insightcontrol. HP Insight Control includes one year of 24 x 7 HP Software Technical Support and Update Service ensuring rapid access to HP support staff and proactive delivery of software updates. For more information about this service, see: http://www.hp.com/services/insight.
	HP iLO Advanced	HP Integrated Lights-Out Advanced License a product option, providing smart remote server management without compromise. iLO Advanced unlocks the full set of remote administration functionality for all HP ProLiant servers by activating the full Virtual Keyboard Video and Mouse remote console, multi-user collaboration, console record and replay, GUI-based and scripted virtual media and virtual folders, and enhanced security and power management functionality. For more information, see: http://www.hp.com/go/iloadvance
	HP Insight Dynamics for ProLiant	HP Insight Dynamics for ProLiant, a product option, is an integrated command center that enables IT Staff personnel to continuously analyze and optimize a converged infrastructure, while automating and reducing the cost of common data center tasks by as much as 40 percent. As a powerfully integrated by design toolkit to accelerate complex technology projects and simplify daily operations that ultimately enable IT Staff personnel to dynamically keep pace with the organizations changing business requirements. It enables them to plan capacity and power continuously, balance across physical and virtual resources, and ensure cost-effective high availability. It also enables IT organizations to provision infrastructure consistently and automatically from pools of shared resources using a self-service portal. Resources provisioned can range from a single virtual machine to complex multi-tier environments and their associated physical and virtual resource requirements. In addition to the previous functional benefits, it also provides a cost-effective disaster recovery for physical and virtual environments that works with HP Continuous Access software for both the Enterprise Virtual Array and the XP storage array allowing application environments to be reactivated in minutes with the touch of a button to a remote location. **NOTE:** For more information, visit: http://www.hp.com/go/insightdynamics
Solutions	The ProLiant DL580 G7 server is an enterprise class, 4 socket server designed for maximum scalability and high availability. Its innovative chassis offers unsurpassed flexibility and serviceability in a versatile form factor. Based upon the latest industry standard processing, memory, I/O and networking technologies, the ProLiant DL580 G7 provides the highest levels of performance demanded by today's compute intensive applications. Unparalleled high availability features, including hot-plug and redundant components, guarantee maximum uptime. HP Integrated Lights-Out 3 (iLO3) technology allows remote administration from a standard web browser without ever having to visit the server. Within the 4U dense form factor, it's highly expandable architecture provides maximum application deployment flexibility with the ability to add PCI-Express, PCI-X, 2 - 10GB NICs and battery-backed write cache options. Innovative features, such as the ability to access processors, memory, hard drives, and power supplies while the unit remains secured in the rack, enable rapid response to service events, radically decreasing overall IT costs and server downtime.	

Optional Features

Typical Usage:
Space-constrained corporate data centers and service providers
Network and I/O expandability, inbuilt availability and reliability features, advanced power management capabilities and large internal storage make DL580 G7 ideal for corporate datacenters.

Database, Messaging and Business Applications
Large internal storage, refined I/O slots options, high network bandwidth, new DDR3 expandable memory combined with latest Intel 8-core expandable processors in DL580 G7 provide everything necessary for today's database, messaging and business applications.

Virtualization and Consolidation
HP's 4S architecture, inbuilt advanced reliability and scalability features make DL580 G7 a perfect platform for virtualization and consolidation solutions. HP's Insight control offerings make it easy to manage, deploy and migrate virtualized servers with VMware or Microsoft® Virtual Server. For more solutions visit: http://www.hp.com/solutions/proliantdl580.

High Performance Clusters	HP Cluster Platforms	HP Cluster Platforms are specifically engineered, factory-integrated large-scale ProLiant clusters optimized for High Performance Computing, with a choice of servers, networks and software. Operating system options include specially priced offerings for Red Hat Enterprise Linux and SUSE Linux Enterprise Server, as well as Microsoft Windows HPC Server. A Cluster Platform Configurator simplifies ordering. http://www.hp.com/go/clusters
	HP HPC Interconnects	High Performance Computing (HPC) interconnect technologies are available for this server as part of the HP Cluster Platform portfolio. These high-speed InfiniBand and Gigabit interconnects are fully supported by HP when integrated within an HP cluster. Flexible, validated solutions can be defined with the help of configuration tools. http://www.hp.com/techservers/clusters/ucp/index.html
	HP Cluster Management Utility	HP Cluster Management Utility (CMU) is an HP-licensed and HP-supported suite of tools that are used to manage large-scale Linux ProLiant systems. CMU includes software for the centralized provisioning, management and monitoring of nodes. CMU makes the administration of clusters user friendly, efficient, and effective. http://www.hp.com/go/cmu

Storage Software

Whether you need to solve a specific data protection, archiving, or storage command and control challenge, or deliver on strategic consolidation, compliance, or continuity initiatives, look no further than HP storage software. Our storage software helps you reduce costs, simplify storage infrastructure, protect vital assets and respond faster to business opportunities.

Storage software that gets the job done:

- **Data Protection and Recovery Software**
  Whether you're a large enterprise or a smaller business, HP data protection and recovery software will cost-effectively protect you against disaster and ensure business continuity.
- **Data Archive and Migration Software**
  HP's storage software enables you to comply with data retention and retrieval requirements, improve application performance, and reduce costs by efficiently migrating infrequently accessed or less valuable data to lower cost storage.
- **Storage Resource Management Software (SRM)**
  HP's storage resource management software reduces operational costs and provides the command and control foundation you need to efficiently manage and visualize your physical and virtual environments.
- **Data Replication Software**

Optional Features

HP offers array-based and host-based replication software for use in disaster recovery, testing, application development and reporting.

- **Storage Device Management Software**
  Maximize your investment in HP storage and networking with software that enables hardware-specific configuration, performance tuning and connectivity management.
- **HP StoreVirtual VSA**
  With HP StoreVirtual VSA you can use the power of virtualization to turn a set of heterogeneous and disconnected physical disk drives in your servers and storage devices into a single pool of logical storage capacity.

NOTE: For more information available Storage Software including QuickSpecs, please see: www.hp.com/go/storage/software.

Factory Express Portfolio for Servers and Storage

HP Factory Express offers configuration, customization, integration and deployment services for HP servers and storage products. Customers can choose how their factory solutions are built, tested, integrated, shipped and deployed.

Factory Express offers service packages for simple configuration, racking, installation, complex configuration and design services as well as individual factory services, such as image loading, asset tagging, and custom packaging. HP products supported through Factory Express include a wide array of servers and storage: HP Integrity, HP ProLiant, HP ProLiant Server Blades, HP BladeSystem, HP 9000 servers as well as the MSAxxxx, VA7xxx, EVA, XP, rackable tape libraries and configurable network switches.

For more information on Factory Express services for your specific server model please contact your sales representative or go to: http://www.hp.com/go/factory-express.

HP Simple Configurator

SCE is a guided self service tool to help sales and non technical people provide customers with initial configurations in 3 to 5 minutes. You may then send the configuration on for configuration help, or use in your existing ordering processes. If you require "custom" rack configuration or configuration for products not available in SCE, please contact HP's Customer Business Center or an Authorized Partner for assistance. http://www.hp.com/products/configurator

Service and Support

Service and Support	**HP Technology Services for Industry Standard Servers** HP Technology Services delivers confidence, reduces risk and helps customers realize agility and stability. Connect to HP to help prevent problems and solve issues faster. Our support technology lets you to tap into the knowledge of millions of devices and thousands of experts to stay informed and in control, anywhere, any time. **Protect your business beyond warranty with HP Care Pack Services** HP Care Pack Services enable you to order the right service level, length of coverage and response time as you purchase your new server, giving you full entitlement for the term you select.
Optimized Care Package	**Supports maintaining servers at optimum performance availability** **HP Proactive Care with 6 hour call-to-repair commitment, three year Care Pack Service** HP Proactive Care helps prevent problems and stabilize IT by utilizing secure, real-time, predictive analytics and proactive consultations when your products are connected to HP. This Care Pack Service combines three years' proactive reporting and advice with our highest level reactive coverage and enhanced escalation management, HP's 24x7, six hour call-to-repair hardware commitment. HP is the only leading manufacturer who makes this level of coverage available as a standard service offering for your most valuable servers. Service includes 24x7 collaborative software support for leading industry standard software running on your HP ProLiant server. http://h20195.www2.hp.com/v2/GetPDF.aspx/4AA3-8855ENW.pdf
Standard Care Package	**Package that maintains high level of server availability** **HP Proactive Care with 24x7 coverage, three year Care Pack Service** HP Proactive Care helps prevent problems and stabilize IT by utilizing secure, real-time, predictive analytics and proactive consultations when your products are connected to HP. This Care Pack Service combines three years' proactive reporting and advice with our 24x7 coverage and enhanced escalation management, four hour hardware response time and two hour call back for software questions on leading industry standard software running on your HP ProLiant server. http://h20195.www2.hp.com/v2/GetPDF.aspx/4AA3-8855ENW.pdf
Related Services	**HP ProLiant Server Hardware Installation** Provides for the basic hardware installation of HP branded servers, storage devices and networking options to assist you in bringing your new hardware into operation in a timely and professional manner. http://h20195.www2.hp.com/V2/GetPDF.aspx/5981-9356EN.pdf **Factory Express for Servers and storage** HP Factory Express offers configuration, customization, integration and deployment services for HP servers and storage products. Customers can choose how their factory solutions are built, tested, integrated, shipped and deployed. For more information on Factory Express services for your specific server model please contact your sales representative or go to: http://www.hp.com/go/factory-express. **Data Privacy Services** Protect your data through better media management. HP Data privacy services help manage and protect sensitive data to reduce the risk of unauthorized access to private information and help meet compliance requirements. Our retention services allow you to keep drives and other devices upon

Service and Support

	failure, our removal services provide convenient data sanitization and our recovery services allow you to safely retire IT assets and capture any remaining value from the hardware. www.hp.com/services/dataprivacy Additional HP Care Pack services can be found at: http://www.hp.com/go/cpc
Get connected to HP to improve your support experience	Prevent problems with innovative, automated monitoring tools and proactive services. Combining Proactive Care Services with our remote support technology such as Insight Online provides you with expert advice and personalized, cloud-based automated IT support, helping to prevent unplanned down time and solve problems quickly. For more information, visit: www.hp.com/go/proactiveinsightexperience
Parts and Materials	HP will provide HP-supported replacement parts and materials necessary to maintain the covered hardware product in operating condition, including parts and materials for available and recommended engineering improvements. Parts and components that have reached their maximum supported lifetime and/or the maximum usage limitations as set forth in the manufacturer's operating manual, product quick-specs, or the technical product data sheet will not be provided, repaired, or replaced as part of these services. The defective media retention service feature option applies only to Disk or eligible SSD/Flash Drives replaced by HP due to malfunction.

Pre-configured Models

NOTE: For the Standard Features shipped in the "Factory Integrated Models", please see the "Configuration Information - Factory Integrated Models" section.
NOTE: Pre-configured models ship with the configurations below. Options can be selected from the Core or Additional options section of this QuickSpecs.
NOTE: HP does not allow factory integration of options into pre-configured models. Any additional options purchased will be shipped separately.
NOTE: If you desire a custom configuration please see "Configuration Information - Factory Integrated Models" section of this QuickSpecs.
NOTE: Not all models are available in all regions. Check with your local country HP offices for availability.

High Performance Models

HP ProLiant DL580 G7 E7-4870 4P 128GB-R P410i/1G FBWC 4x1200W HE PS Server
643063-xx1

HP ProLiant DL580 G7 E7-4850 4P 128GB-R P410i/1G FBWC 4x1200W HE PS Server
643064-xx1

HP ProLiant DL580 G7 E7-4870 4P 128GB-R Hot Plug SAS SFF BC NIC 1200W PS Server
696729-xx1

HP ProLiant DL580 G7 E7-4850 4P 128GB-R Hot Plug SAS SFF BC NIC 1200W PS Server
696730-xx1

Processor(s) Four of the following depending on model	(4) Intel® Xeon® E7-4870 (2.40GHz/10-core/30MB/130W) Processors (4) Intel® Xeon® E7-4850 (2.00GHz/10-core/24MB/130W) Processors
Cache Memory One of the following depending on model	30MB (1 x 30MB) Level 3 cache 24MB (1 x 24MB) Level 3 cache
Memory One of the following depending on model	128GB (16 x 8GB DIMMs) PC3-10600R DIMMs (DDR3) installed in (8) (E7) Memory Cartridges (E7-4870, E7-4850 Models) 64GB (16 x 4GB DIMMs) PC3-10600R DIMMs (DDR3) installed in (8) memory boards (X7560, X7550 Models) 32GB (8 x 4GB DIMMs) PC3-10600R DIMMs (DDR3) installed in (4) memory boards (E7540 Models)
Network Controller	HP NC375i Integrated Quad Port Gigabit Server Adapter
Storage Controller	Embedded HP Smart Array P410i/1G FBWC Controller
Hard Drives	None ship standard
Internal Storage	Up to 8.0TB of internal storage (SFF SAS)
Optical Drive	HP Slim SATA DVD ROM Optical Drive
Power Supply One of the following depending on model	(4) HP 1200W Common Slot Platinum Hot Plug Power Supply Kit (E7-4870, E7-4850 Models)
Fans	Four Hot Plug redundant fans standard (3+1)
Integrated Lights Out	Integrated Lights-Out 3 (iLO 3) ships standard
Insight Control	HP Insight Control No Media single server license, including 1 year of 24x7 Technical Support and Updates
Form Factor	Rack 4U
Warranty	Server Warranty includes 3-Year Parts, 3-Year Labor, 3-Year Onsite support with next business day response

Base Models

HP ProLiant DL580 G7 E7-4830 2P 64GB-R P410i/512 FBWC 2x1200W HE PS Server
643065-xx1

HP ProLiant DL580 G7 E7-4807 2P 64GB-R P410i/512 FBWC 2x1200W HE PS Server

Processor(s) Two of the following depending on model Up to 4 supported	(2) Intel® Xeon® E7-4830 (2.13GHz/8-core/24MB/105W) Processors (2) Intel® Xeon® E7-4807 (1.86GHz/6-core/18MB/95W) Processors
Cache Memory One of the following depending on model	24MB (1 x 24MB) Level 3 cache
Memory	64GB (8 x 8GB DIMMs) PC3-10600R DIMMs (DDR3) installed in (4) (E7) Memory Cartridges (E7-4830, E7-4807 Models)
Network Controller	HP NC375i Integrated Quad Port Gigabit Server Adapter (643065-xx1 and

Pre-configured Models

643066-xx1 **HP ProLiant DL580 G7 E7-4830 2P 64GB-R Hot Plug SAS SFF BC NIC 1200W PS Server** 696731-xx1 **HP ProLiant DL580 G7 E7-4807 2P 64GB-R Hot Plug SAS SFF BC NIC 1200W PS Server** 696732-xx1		643066-xx1 Models) HP Ethernet 1Gb 4-port 331i Integrated Server Adapter (696731-xx1 and 696732-xx1 Models)
	Storage Controller	Embedded HP Smart Array P410i/512 MB FBWC Controller
	Hard Drives	None ship standard
	Internal Storage	Up to 8.0TB of internal storage (SFF SAS)
	Optical Drive	HP Slim SATA DVD ROM Optical Drive
	Power Supply One of the following depending on model	(2) HP 1200W Common Slot Platinum Hot Plug Power Supply Kit (E7-4830, E7-4807 Models)
	Fans	Four Hot Plug redundant fans standard (3+1)
	Integrated Lights Out	Integrated Lights-Out 3 (iLO 3) ships standard
	Form Factor	Rack 4U
	Warranty	Server Warranty includes 3-Year Parts, 3-Year Labor, 3-Year Onsite support with next business day response

Country Code Key	xx = 00	US
	xx = 20	Brazil
	xx = 29	Japan
	xx = 37	APD
	xx = 42	Europe
	xx = AA	PRC

Configuration Information - Factory Integrated Models

NOTE: This section lists some of the steps required to configure a Factory Integrated Model. To ensure only valid configurations are ordered, HP recommends the use of an HP approved configurator. Contact your local sales representative for information on configurable product offerings and requirements.
NOTE: Factory Integrated Models must start with a CTO Server
NOTE: FIO indicates that this option is only available as a factory installable option.

Step 1: Base Configuration

HP Models

HP ProLiant DL580 G7 (E7) Configure-to-order Server 643086-B21

Factory Integrated Models ship with:

HP NC375i Integrated Quad Port Gigabit Server Adapter
Four HP DL580G7/DL980 G7 (E7) Memory Cartridges
Five standard PCI-express slots
HP Smart Array P410i/ Zero Memory Controller
Four redundant hot-plug fans
SFF SAS/SATA/SSD drive cage
HP Integrated Lights-Out 3 (iLO 3) management processor: integrated on system board
Rack (4U), 7-inch
NOTE: Power supplies need to be selected separately from Step 2 below.
NOTE: Customers purchasing the Intel® Xeon® Processor E7 series will need to purchase the HP DL580R07 (E7) CTO Server (PN 643086-B21)

HP ProLiant DL580 G7 (E7) BC NIC Configure-to-order Server 643086-B22

Factory Integrated Models ship with:

HP Ethernet 1Gb 4-port 331i Integrated Server Adapter
Four HP DL580G7/DL980 G7 (E7) Memory Cartridges
Five standard PCI-express slots
HP Smart Array P410i/ Zero Memory Controller
Four redundant hot-plug fans
SFF SAS/SATA/SSD drive cage
HP Integrated Lights-Out 3 (iLO 3) management processor: integrated on system board
Rack (4U), 7-inch
NOTE: Power supplies need to be selected separately from Step 2 below

Step 2: Choose Required Options (only one of the following from each list unless otherwise noted)

HP Processors

NOTE: If a 2p configuration is selected, then a single -L21 processor kit should be used. If a 3p configuration is selected, then first processor kit is -L21 and second is -B21. If a 4p configuration is selected, then first processor kit is -L21 and second and third processor kit is -B21.
NOTE: Intel® Xeon® Processor E7-4800 series processors are supported only in the HP ProLiant DL580 G7 (E7) Configure-to-order Server (PN 643086-B2x) and E7 series pre-configured models)

Ten-Core Processors

HP DL580 G7 Intel® Xeon® E7-4870 (2.40GHz/10-core/30MB/130W) FIO 2-processor Kit 643067-L21
NOTE: QPI speed is 6.40 GT/s

HP DL580 G7 Intel® Xeon® E7-4860 (2.26GHz/10-core/24MB/130W) FIO 2-processor Kit 643069-L21
NOTE: QPI speed is 6.40 GT/s

HP DL580 G7 Intel® Xeon® E7-4850 (2.00GHz/10-core/24MB/130W) FIO 2-processor 643071-L21

Configuration Information - Factory Integrated Models

	Kit **NOTE:** QPI speed is 6.40 GT/s	
	HP DL580 G7 Intel® Xeon® E7-8867L (2.13GHz/10-core/30MB/105W) FIO 2-processor Kit **NOTE:** QPI speed is 6.40 GT/s	643079-L21
	Eight-Core Processors	
	HP DL580 G7 Intel® Xeon® E7-8837 (2.67GHz/8-core/24MB/130W) FIO 2-processor Kit **NOTE:** QPI speed is 6.40 GT/s	643081-L21
	HP DL580 G7 Intel® Xeon® E7-4830 (2.13GHz/8-core/24MB/105W) FIO 2-processor Kit **NOTE:** QPI speed is 6.40 GT/s	643073-L21
	HP DL580 G7 Intel® Xeon® E7-4820 (2.0GHz/8-core/18MB/105W) FIO 2-processor Kit **NOTE:** QPI speed is 5.86 GT/s	643075-L21
	Six-Core Processors	
	HP DL580 G7 Intel® Xeon® E7-4807 (1.86GHz/6-core/18MB/95W) FIO 2-processor Kit **NOTE:** QPI speed is 4.80 GT/s	643077-L21
HP Memory	**Registered DIMMs (RDIMMs)**	
	HP 2GB (1x2GB) Dual Rank x8 PC3-10600 (DDR3-1333) Registered CAS-9 Memory Kit **NOTE:** Only supported with the Intel® Xeon® Processor 7500 series processors	500656-B21
	HP 4GB (1x4GB) Dual Rank x4 PC3-10600 (DDR3-1333) Registered CAS-9 Memory Kit	500658-B21
	HP 4GB (1x4GB) Single Rank x4 PC3L-10600 (DDR3-1333) Registered CAS-9 Low Power Memory Kit	604504-B21
	HP 8GB (1x8GB) Dual Rank x4 PC3-10600 (DDR3-1333) Registered CAS-9 Memory Kit	500662-B21
	HP 8GB (1x8GB) Dual Rank x4 PC3L-10600 (DDR3-1333) Registered CAS-9 Low Power Memory Kit	604506-B21
	HP 16GB (1x16GB) Dual Rank x4 PC3L-10600 (DDR3-1333) Registered CAS-9 LP Memory Kit	627812-B21
	HP 32GB (1x32GB) Quad Rank x4 PC3L-8500 (DDR3-1066) Registered CAS-7 LP Memory Kit	627814-B21
	NOTE: PC3L DIMMs are only supported with the Intel® Xeon® E7-48xx/88xx processors and require (E7) memory cartridge. **NOTE:** PC3L is a low-voltage memory.	
	Memory Expansion Options	
	HP DL580G7/DL980G7 (E7) Memory Cartridge **NOTE:** Four memory cartridges come standard in the HP ProLiant DL580 G7 (E7) Configure-to-order Server (643086-B21), each kit contains one cartridge and a maximum of (8) are supported in the server. See Memory Performance Optimization in the Memory section for configuration guidelines.	644172-B21
HP Power Supplies	**NOTE:** Prior to making a power supply selection it is highly recommended that the HP Power Advisor is run to determine the right size power supply for your server configuration. The HP Power Advisor is located at: www.hp.com/go/hppoweradvisor.	
	HP 1200W Common Slot Silver Hot Plug Power Supply Kit	500172-B21
	HP 1200W Common Slot Platinum Hot Plug Power Supply Kit	578322-B21

Configuration Information - Factory Integrated Models

NOTE: All power supplies in a server should match. Mixing Platinum and Silver Power Supplies is not supported.
NOTE: Option Kits contain optional power supply, an IEC power cable and PDU IEC cables.
NOTE: HP ProLiant servers ship with an IEC-IEC power cord used for rack mounting with Power Distribution Units (PDUs). For a full list of optional HP power cords please go to www.hp.com/products/powercords

Step 3: Choose Additional Factory Integratable Options

HP Insight Software	HP Insight Control including 1yr 24x7 Support ProLiant ML/DL/BL-bundle Single Server FIO License	C6N36A
	HP Insight Control including 1yr 24x7 Support ProLiant ML/DL/BL-bundle FIO Electronic License **NOTE:** The Electronic software license is available in EMEA only.	C6N36ABE

Step 4: Choose Additional Options for Factory Integration

NOTE: For additional options, please refer to the "Core Options" and "Additional Options" section below.

Core Options

NOTE: Some options may not be integrated at the factory. To ensure only valid configurations are ordered, HP recommends the use of an HP approved configurator. Contact your local sales representative for additional information.

HP Unique Options	HP DL580 G7 PCI Express Kit **NOTE:** Adds four PCI-E 2.0 x8, one PCI-E 2.0 x4 and one PCI-E 1.1 x4.	588137-B21
	HP DL580 G7 PCI-X Combo Express Kit **NOTE:** Adds two PCI-E 2.0 x16, one PCI-E 2.0 x4 and two PCI-X.	588139-B21
	HP DL580G7/DL980G7 (E7) Memory Cartridge **NOTE:** Four memory cartridges come standard in the HP ProLiant DL580 G7 (E7) Configure-to-order Server (643086-B21), each kit contains one cartridge and a maximum of (8) are supported in the server. See Memory Performance Optimization in the Memory section for configuration guidelines.	644172-B21
HP Processors	**Ten-Core Processors**	
	HP DL580 G7 Intel® Xeon® E7-4870 (2.40GHz/10-core/30MB/130W) Processor Kit **NOTE:** QPI speed is 6.40 GT/s	643067-B21
	HP DL580 G7 Intel® Xeon® E7-4860 (2.26GHz/10-core/24MB/130W) Processor Kit **NOTE:** QPI speed is 6.40 GT/s	643069-B21
	HP DL580 G7 Intel® Xeon® E7-4850 (2.00GHz/10-core/24MB/130W) Processor Kit **NOTE:** QPI speed is 6.40 GT/s	643071-B21
	HP DL580 G7 Intel® Xeon® E7-8867L (2.13GHz/10-core/30MB/105W) Processor Kit **NOTE:** QPI speed is 6.40 GT/s	643079-B21
	Eight-Core Processors	
	HP DL580 G7 Intel® Xeon® E7-8837 (2.67GHz/8-core/24MB/130W) Processor Kit **NOTE:** QPI speed is 6.40 GT/s	643081-B21
	HP DL580 G7 Intel® Xeon® E7-4830 (2.13GHz/8-core/24MB/105W) Processor Kit **NOTE:** QPI speed is 6.40 GT/s	643073-B21
	HP DL580 G7 Intel® Xeon® E7-4820 (2.0GHz/8-core/18MB/105W) Processor Kit **NOTE:** QPI speed is 5.86 GT/s	643075-B21
	Six-Core Processors	
	HP DL580 G7 Intel® Xeon® E7-4807 (1.86GHz/6-core/18MB/95W) Processor Kit **NOTE:** QPI speed is 4.80 GT/s	643077-B21
	NOTE: Above processor kits contain one processor each. **NOTE:** Intel® Xeon® Processor E7-4800 series processors only supported in the HP ProLiant DL580 G7 (E7) Configure-to-order Server (PN 643086-B2x) and E7 series pre-configured models (PNs 6430xx-xx1 & 6967xx-xx1)	
HP Memory	**Registered DIMMs (RDIMMs)**	
	HP 2GB (1x2GB) Dual Rank x8 PC3-10600 (DDR3-1333) Registered CAS-9 Memory Kit **NOTE:** Only supported with the Intel® Xeon® Processor 7500 series processors.	500656-B21
	HP 4GB (1x4GB) Dual Rank x4 PC3-10600 (DDR3-1333) Registered CAS-9 Memory Kit	500658-B21
	HP 4GB (1x4GB) Single Rank x4 PC3L-10600 (DDR3-1333) Registered CAS-9 Low Power Memory Kit	604504-B21
	HP 8GB (1x8GB) Dual Rank x4 PC3-10600 (DDR3-1333) Registered CAS-9 Memory Kit	500662-B21
	HP 8GB (1x8GB) Dual Rank x4 PC3L-10600 (DDR3-1333) Registered CAS-9 Low Power Memory Kit	604506-B21
	HP 16GB (1x16GB) Dual Rank x4 PC3L-10600 (DDR3-1333) Registered CAS-9 LP	627812-B21

Core Options

	Memory Kit	
	HP 32GB (1x32GB) Quad Rank x4 PC3L-8500 (DDR3-1066) Registered CAS-7 LP Memory Kit	627814-B21
	NOTE: PC3L DIMMs are only supported with the Intel® Xeon® Processor E7 series processors and require (E7) memory cartridge.	
	NOTE: PC3L is a low-voltage memory.	
	Memory Expansion Options	
	HP DL580G7/DL980G7 (E7) Memory Cartridge	644172-B21
	NOTE: Four memory cartridges come standard in the HP ProLiant DL580 G7 (E7) Configure-to-order Server (643086-B21), each kit contains one cartridge and a maximum of (8) are supported in the server. See Memory Performance Optimization in the Memory section for configuration guidelines.	
HP Optical Drives	**NOTE:** Optical drives are ejectable.	
	HP Slim 12.7mm SATA DVD-RW Optical Drive	481043-B21
	HP Slim 12.7mm SATA DVD-ROM Optical Drive	481041-B21
HP Hard Drives	**NOTE:** The components of a storage subsystem (e.g. the drive, the HBA/controller, firmware, and the server backplane) should operate at the same data transfer rate or the system bandwidth will be negotiated down to an acceptable level for all components.	
	NOTE: Hard drives have either a one year or three year warranty; refer to the specific hard drive QuickSpecs for details.	
	6G SAS Hot Plug SFF (2.5-inch) Enterprise Drives	
	HP 1.2TB 6G SAS 10K rpm SFF (2.5-inch) Dual Port Enterprise 3yr Warranty Hard Drive	718160-B21
	HP 900GB 6G SAS 10K rpm SFF (2.5-inch) Dual Port Enterprise 3yr Warranty Hard Drive	619291-B21
	HP 600GB 6G SAS 10K rpm SFF (2.5-inch) Dual Port Enterprise 3yr Warranty Hard Drive	581286-B21
	HP 450GB 6G SAS 10K rpm SFF (2.5-inch) Dual Port Enterprise 3yr Warranty Hard Drive	581284-B21
	HP 300GB 6G SAS 10K rpm SFF (2.5-inch) Dual Port Enterprise 3yr Warranty Hard Drive	507127-B21
	HP 300GB 6G SAS 15K rpm SFF (2.5-inch) Hot Plug Enterprise 3yr Warranty Hard Drive	627117-B21
	HP 146GB 6G SAS 15K rpm SFF (2.5-inch) Dual Port Enterprise 3yr Warranty Hard Drive	512547-B21
	12G SAS Hot plug 12G SFF (2.5-in) 15K Enterprise HDD	
	HP 600GB 12G SAS 15K rpm SFF (2.5-inch) Enterprise 3yr Warranty Hard Drive	785103-B21
	HP 450GB 12G SAS 15K rpm SFF (2.5-inch) Enterprise 3yr Warranty Hard Drive	785101-B21
	HP 300GB 12G SAS 15K rpm SFF (2.5-inch) Enterprise 3yr Warranty Hard Drive	785099-B21
	6G SAS Hot Plug SFF (2.5-inch) Midline (MDL) Drives	
	HP 1TB 6G SAS 7.2K rpm SFF (2.5-inch) Dual Port Midline 1yr Warranty Hard Drive	605835-B21
	HP 500GB 6G SAS 7.2K rpm SFF (2.5-inch) Dual Port Midline 1yr Warranty Hard Drive	507610-B21
	NOTE: Please see the QuickSpecs for Technical Specifications and additional information: http://www8.hp.com/h20195/v2/GetDocument.aspx?docname=c04311358	
	12G SAS Hot Plug Mainstream Endurance SFF (2.5-inch) Enterprise Mainstream SSD	
	HP 800GB 12G SAS Mainstream Endurance SFF 2.5-in Enterprise Mainstream 3yr Wty Solid State Drive	741144-B21
	HP 400GB 12G SAS Mainstream Endurance SFF 2.5-in Enterprise Mainstream 3yr Wty Solid State Drive	741140-B21
	HP 200GB 12G SAS Mainstream Endurance SFF 2.5-in Enterprise Mainstream 3yr Wty Solid	741136-B21

Core Options

State Drive

12G SAS Hot Plug High Endurance SFF (2.5-inch) Enterprise Performance SSD

HP 800GB 12G SAS High Endurance SFF 2.5-in Enterprise Performance 3yr Wty Solid State Drive	741157-B21
HP 400GB 12G SAS High Endurance SFF 2.5-in Enterprise Performance 3yr Wty Solid State Drive	741153-B21
HP 200GB 12G SAS High Endurance SFF 2.5-in Enterprise Performance 3yr Wty Solid State Drive	741148-B21

3G SATA Hot Plug SFF (2.5-inch) Midline Drives

HP 1TB 3G SATA 7.2K rpm SFF (2.5-inch) Hot Plug Midline 1yr Warranty Hard Drive	625609-B21
HP 500GB 3G SATA 7.2K rpm SFF (2.5-inch) Midline 1yr Warranty Hard Drive	507750-B21

NOTE: Please see the QuickSpecs for Technical Specifications and additional information: http://www8.hp.com/h20195/v2/GetDocument.aspx?docname=c04152612

6G SATA Value Endurance Hot Plug SFF (2.5-inch) Enterprise Boot Solid State Drives

HP 120GB 6G SATA Value Endurance SFF 2.5-in Enterprise Boot 3yr Wty Solid State Drive	728726-B21
HP 80GB 6G SATA Value Endurance SFF 2.5-in Enterprise Boot 3yr Wty Solid State Drive	734366-B21

6G SATA Value Endurance Hot Plug SFF (2.5-inch) Enterprise Value Solid State Drives

HP 1.6TB 6G SATA Value Endurance SFF 2.5-in Enterprise Value 3yr Wty Solid State Drive	757351-B21
HP 800GB 6G SATA Value Endurance SFF 2.5-in Enterprise Value 3yr Wty Solid State Drive	728743-B21
HP 480GB 6G SATA Value Endurance SFF 2.5-in Enterprise Value 3yr Wty Solid State Drive	728739-B21
HP 600GB 6G SATA Value Endurance SFF 2.5-in Enterprise Value 3yr Wty Solid State Drive	739904-B21
HP 300GB 6G SATA Value Endurance SFF 2.5-in Enterprise Value 3yr Wty Solid State Drive	739894-B21
HP 240GB 6G SATA Value Endurance SFF 2.5-in Enterprise Value 3yr Wty Solid State Drive	728735-B21

6G SATA VE Hot Plug SFF (2.5-inch) Enterprise Value G1 Solid State Drives

HP 480GB 6G SATA Value Endurance SFF 2.5-in Enterprise Value 3yr Wty G1 Solid State Drive	756666-B21
HP 240GB 6G SATA Value Endurance SFF 2.5-in Enterprise Value 3yr Wty G1 Solid State Drive	756651-B21
HP 120GB 6G SATA Value Endurance SFF 2.5-in Enterprise Value 3yr Wty G1 Solid State Drive	756630-B21

6G SATA LE Hot Plug SFF (2.5-inch) Enterprise Value G1 Solid State Drives

HP 960GB 6G SATA Light Endurance SFF 2.5-in Enterprise Light 3yr Wty G1 Solid State Drive	756611-B21

6G SATA ME Hot Plug SFF (2.5-inch) Enterprise Mainstream Solid State Drives

HP 800GB 6G SATA Mainstream Endurance SFF 2.5-in Enterprise Mainstream 3yr Wty Solid State Drive	730065-B21
HP 400GB 6G SATA Mainstream Endurance SFF 2.5-in Enterprise Mainstream 3yr Wty Solid State Drive	730063-B21
HP 200GB 6G SATA Mainstream Endurance SFF 2.5-in Enterprise Mainstream 3yr Wty Solid State Drive	730061-B21
HP 100GB 6G SATA Mainstream Endurance SFF 2.5-in Enterprise Mainstream 3yr Wty Solid State Drive	730059-B21

NOTE: Cable is not included for Non-hot plug Drives. SSD cable option kit sku: 661778-B21

NOTE: Please see the QuickSpecs for Technical Specifications and additional information: http://h18000.www1.hp.com/products/quickspecs/14038_div/14038_div.html (Worldwide)

HP Networking **Gigabit Ethernet Adapters**

Core Options

	HP NC112T PCI Express Gigabit Server Adapter	503746-B21
	HP NC360T PCI-E Dual Port Gigabit Server Adapter	412648-B21
	HP NC364T PCI-E Quad Port Gigabit Server Adapter	435508-B21
	HP NC365T 4-port Ethernet Server Adapter	593722-B21
	HP NC373F PCI-E Multifunction 1000SX Gigabit Svr Adapter	394793-B21
	HP NC373T PCI-E Multifunction Gigabit Server Adapter	394791-B21
	HP NC375T PCI Express Quad Port Gigabit Server Adapter	538696-B21
	HP NC382T PCI Express Dual Port Multifunction Gigabit Server Adapter	458492-B21
	HP Ethernet 1Gb 4-port 331T Adapter	647594-B21
	HP Ethernet 1Gb 2-port 332T Adapter	615732-B21
	HP Ethernet 1Gb 2-port 361T Adapter	652497-B21
	10 Gigabit Ethernet Adapters **NOTE:** A minimum of two Gigabytes (2 GB) of server memory is required per each adapter.	
	HP NC523SFP 10Gb 2-port Server Adapter	593717-B21
	HP NC552SFP 10Gb 2-port Ethernet Server Adapter	614203-B21
	HP Ethernet 10Gb 2-port 530SFP Adapter	652503-B21
	HP Ethernet 10Gb 2-port 530T Adapter	656596-B21
	HP Ethernet 10Gb 2-port 560SFP+ Adapter	665249-B21
	NOTE: Please see the QuickSpecs for Technical Specifications and additional information: www.hp.com/go/ProLiantNICs	
HP InfiniBand	HP InfiniBand 4X QDR ConnectX-2 PCIe G2 Dual Port HCA	592520-B21
	QLogic InfiniBand 4X QDR PCI-E G2 Dual Port HCA	583211-B21
	HP Infiniband FDR/Ethernet 10Gb/40Gb 2-port 544QSFP Adapter	649281-B21
	NOTE: Please see the QuickSpecs for additional information: http://h18000.www1.hp.com/products/quickspecs/13078_div/13078_div.html	
HP I/O Expansion Options	HP DL580 G7 PCI Express Kit **NOTE:** Adds four PCI-E 2.0 x8, one PCI-E 2.0 x4 and one PCI-E 1.1 x4.	588137-B21
	HP DL580 G7 PCI-X Combo Express Kit **NOTE:** Adds two PCI-E 2.0 x16, one PCI-E 2.0 x4 and two PCI-X Suggested Slot placement: 1. Slot 3 PCIe2 x 16 (16,8,4,2,1) 2. Slot 6 PCIe2 x 16 (16,8,4,2,1) 3. Slot 9 PCIe2 x 16 (8,4,2,1) 4. Slot 11 PCIe2 x 16 (8,4,2,1) **NOTE:** Slot 9 and 11 are physically a x16 slot but will operate electrically at x8.	588139-B21
HP Power Supplies	**NOTE:** Prior to making a power supply selection it is highly recommended that the HP Power Advisor is run to determine the right size power supply for your server configuration. The HP Power Advisor is located at: www.hp.com/go/hppoweradvisor.	
	HP 1200W Common Slot Silver Hot Plug Power Supply Kit	500172-B21
	HP 1200W Common Slot Platinum Hot Plug Power Supply Kit	578322-B21

Core Options

NOTE: All power supplies in a server should match. Mixing Platinum and Silver Power Supplies is not supported.
NOTE: Option Kits contain optional power supply, an IEC power cable and PDU IEC cables.
NOTE: HP ProLiant servers ship with an IEC-IEC power cord used for rack mounting with Power Distribution Units (PDUs). For a full list of optional HP power cords please go to www.hp.com/products/powercords

Additional Options

NOTE: Some options may not be integrated at the factory. To ensure only valid configurations are ordered, HP recommends the use of an HP approved configurator. Contact your local sales representative for additional information.

HP Insight Software	**HP Insight Control**	
	HP Insight Control including 1yr 24x7 Technical Support and Updates Single Server License	C6N27A
	HP Insight Control including 1yr 24x7 Technical Support and Updates Electronic License **NOTE:** The Electronic software license is available in EMEA only.	C6N28ABE
	HP Insight Control Server Provisioning Media Kit	BD883A
	HP Insight Management Media Kit	C6N31A
	NOTE: Electronic and Flexible-Quantity licenses can be used to purchase multiple licenses with a single activation key. **NOTE:** Customer will receive a license entitlement certificate. The license entitlement certificate must be redeemed online or via fax in order to obtain the license activation key(s). Includes one year of 24 x 7 HP Software Technical Support and Update Service.	
	NOTE: Licenses ship without media. The HP Insight Control Media Kit can be ordered separately, or can be downloaded at: http://www.hp.com/go/insightupdates. **NOTE:** For additional license options please see the QuickSpecs at: http://h18000.www1.hp.com/products/quickspecs/12631_div/12631_div.html	
	HP Integrated Lights-Out (iLO) Advanced for ProLiant	
	HP iLO Advanced including 1yr 24x7 Technical Support and Updates E-LTU **NOTE:** The Electronic software license is available in EMEA only.	E6U59ABE
	HP iLO Advanced including 3yr 24x7 Technical Support and Updates E-LTU **NOTE:** The Electronic software license is available in EMEA only.	E6U64ABE
	HP iLO Advanced including 1yr 24x7 Technical Support and Updates Single Server License	512485-B21
	HP iLO Advanced 1 Server License with 3yr 24x7 Tech Support and Updates	BD505A
	NOTE: For additional license options please see the QuickSpecs at: http://h18004.www1.hp.com/products/quickspecs/14276_div/14276_div.html	
	NOTE: For more information, visit: http://www.hp.com/go/ilo	
High Performance Clusters	**HP Cluster Management Utility**	
	HP Insight Cluster Management Utility 1yr 24x7 Flexible License **NOTE:** This part number can be used to purchase one certificate for multiple licenses with a single activation key. Each license is for one node (server). Customer will receive a printed end user license agreement and license entitlement certificate via physical shipment. The license entitlement certificate must be redeemed online in order to obtain a license key.	QL803B
	HP Insight Cluster Management Utility 3yr 24x7 Flexible License **NOTE:** These part numbers can be used to purchase one certificate for multiple licenses and support with a single activation key. Each license is for one node (server). Customer will receive a printed end user license agreement and license entitlement certificate via physical shipment. The license entitlement certificate must be redeemed online in order to obtain a license key. Customer also will receive a support agreement.	BD476A
	HP Insight Cluster Management Utility Media	BD477A
	NOTE: For additional license kits please see the QuickSpecs at: http://h18004.www1.hp.com/products/quickspecs/12612_div/12612_div.html	

Additional Options

HP I/O Accelerator Options	**Second Generation Accelerators**	
	HP 365GB Multi Level Cell G2 PCIe ioDrive2 for ProLiant Servers	673642-B21
	HP 785GB Multi Level Cell G2 PCIe ioDrive2 for ProLiant Servers	673644-B21
	HP 1205GB Multi Level Cell G2 PCIe ioDrive2 for ProLiant Servers	673646-B21
	HP 2410GB Multi Level Cell G2 PCIe ioDrive2 Duo for ProLiant Servers	673648-B21
	HP 3TB G2 FH/HL PCIe ioDrive2 IO Accelerator for ProLiant Servers	721458-B21
	NOTE: Please see the QuickSpecs for Technical Specifications and additional information: http://h18000.www1.hp.com/products/quickspecs/13587_div/13587_div.html (Worldwide)	
HP PCIe Workload Accelerator Options	**Mainstream Endurance (ME) PCIe Workload Accelerators**	
	HP 1.4TB HH/HL Mainstream Endurance (ME) PCIe Workload Accelerator	729307-B21
	HP 700GB HH/HL Mainstream Endurance (ME) PCIe Workload Accelerator	729305-B21
	High Endurance (HE) PCIe Workload Accelerators	
	HP 700GB HH/HL High Endurance (HE) PCIe Workload Accelerator	708090-B21
	HP 350GB HH/HL High Endurance (HE) PCIe Workload Accelerator	708088-B21
	NOTE: Please see the QuickSpecs for Technical Specifications and additional information: http://h18000.www1.hp.com/products/quickspecs/14528_div/14528_div.html (Worldwide)	
HP Graphics Options	HP DL580/DL585/DL980 Power Cable Kit	631660-B21
	NOTE: The HP ProLiant DL580 G7 can support up to 4 (225W) or 3(300W) Graphic Cards and/or GPGPU Accelerator Options (x16 PCIE add-in cards in slots 11 and 9 will down-train electrically to x8 PCIE which may result in reduced performance.) **NOTE:** An option kit will be required per Graphic Card and/or GPGPU Accelerator Options. **NOTE:** Depending on the number of GPGPUs required, customers will need to purchase the following I/O expansion boards: DL580G7 PCI-X / PCI Express I/O Exp. Kit: PN: 588139-B21 (Adds two PCI-E 2.0 x16, one PCI-E 2.0 x4 and two PCI-X).	
HP Security	HP Trusted Platform Module Option	488069-B21
	NOTE: The TPM (Trusted Platform Module) is a microcontroller chip that can securely store artifacts used to authenticate the server platform. These artifacts can include passwords, certificates and encryption keys. Windows® BitLocker™ Drive Encryption (BitLocker) is a data protection feature available in Windows Server® 2008. BitLocker leverages the enhanced security capabilities of a Trusted Platform Module (TPM) version 1.2. The TPM works with BitLocker to help protect user data and to ensure that a server running Windows Server 2008 has not been tampered with while the system was offline. For more information about TPM, including a white paper, go to: www.hp.com/go/TPM. **NOTE:** ProLiant OS pre-installed units will come with the partition required for TPM deployment. **NOTE:** The TPM key is unique to every TPM deployed server and must be retained. Misplacing or losing the key could result in data loss.	
HP Storage Controllers	**SAS Controllers**	
	Smart Array P212 Controller	
	HP Smart Array P212/ZM 1-ports Int/1-ports Ext PCIe x8 SAS Controller	462828-B21
	HP Smart Array P212/256 1-ports Int/1-ports Ext PCIe x8 SAS Controller	462834-B21

Additional Options

Smart Array P410 Controller	
HP Smart Array P410/256 2-ports Int PCIe x8 SAS Controller	462862-B21
HP Smart Array P410/512 BBWC 2-ports Int PCIe x8 SAS Controller	462864-B21
HP Smart Array P410/512 FBWC 2-ports Int PCIe x8 SAS Controller	578230-B21
HP Smart Array P410/1G FBWC 2-ports Int PCIe x8 SAS Controller	572532-B21
Smart Array P411 Controller	
HP Smart Array P411/256 2-ports Ext PCIe x8 SAS Controller	462830-B21
HP Smart Array P411/512 BBWC 2-ports Ext PCIe x8 SAS Controller	462832-B21
HP Smart Array P411/1G FBWC 2-ports Ext PCIe x8 SAS Controller	572531-B21
HP Smart Array P411/512 FBWC 2-ports Ext PCIe x8 SAS Controller	578229-B21
Smart Array P812 Controller	
HP Smart Array P812/1G FBWC 2-ports Int/4-ports Ext PCIe x8 SAS Controller	487204-B21
Optional Upgrades	
HP 512MB P-Series Battery Backed Write Cache Upgrade **NOTE:** Supported on HP Smart Array P411 Controller only.	462967-B21
HP 1GB Flash Backed Cache	534562-B21
HP 512MB Flash Backed Write Cache	534916-B21
HP 256MB P-series Cache Upgrade	462968-B21
HP Smart Array Advanced Pack including 1yr 24x7 Technical Support and Updates Single Server License **NOTE:** This part number can be used to purchase a single license or to order multiple licenses with a single activation key. Customers will receive a license entitlement certificate via e-mail. The license entitlement certificate must be redeemed online or via fax in order to obtain the license activation key(s). Include one year of 24x7 HP Software Technical Support Services. **NOTE:** Please see the QuickSpecs for Technical Specifications and additional information: http://h18000.www1.hp.com/products/quickspecs/13203_div/13203_div.html (Smart Array P212 Controller) http://h18000.www1.hp.com/products/quickspecs/13201_div/13201_div.html (Smart Array P410 Controller) http://h18000.www1.hp.com/products/quickspecs/13202_div/13202_div.html (Smart Array P411 Controller) http://h18000.www1.hp.com/products/quickspecs/13558_div/13558_div.html (Smart Array P812 Controller) http://h18000.www1.hp.com/products/quickspecs/13200_div/13200_div.html (Smart Array Advanced Pack)	516471-B21
SAS HBA	
HP Modular Smart Array SC08e 2-ports Ext PCIe x8 SAS Host Bus Adapter **NOTE:** This is a 2 x4 External Port HBA **NOTE:** This is only approved for the HP P2000 G3 SAS Modular Smart Array. **NOTE:** Please see the QuickSpecs for Technical Specifications and additional information: http://h18004.www1.hp.com/products/quickspecs/13651_div/13651_div.html (SC08e 6Gb HBA)	614988-B21
SCSI HBA	
HP SC11Xe Ultra320 Single Channel/ PCIe x4 SCSI Host Bus Adapter **NOTE:** Recommended HBA for SCSI tape drive connect. **NOTE:** Please see the following QuickSpecs for additional information:	412911-B21

Additional Options

	http://h18000.www1.hp.com/products/quickspecs/12566_div/12566_div.html (SC11Xe HBA)	
HP Power Cords	HP C13 - SEV 1011 CH 250V 10Amp 1.83m Power Cord	AF565A
	HP C13 - DK-2.5A DK 250V 10Amp 1.83m Power Cord	AF566A
	HP C13 - CEE-VII EU 250V 10Amp 1.83m Power Cord	AF568A
	HP C13 - BS-1363A UK/HK/SG 250V 10Amp 1.83m Power Cord	AF570A
	HP C13 - CEI-23-50 IT/CL 250V 10Amp 1.83m Power Cord	AF571A
	HP C13 - SABS-164 ZA 250V 10Amp 2.5m Power Cord	AF567A
HP Tape Backup	**NOTE:** For the complete range of tape drives, autoloaders, libraries and media see: http://www.hp.com/go/tape. For hardware and software compatibility of HP tape backup products see: http://www.hp.com/storage/SPOCK and www.hp.com/go/ebs. **NOTE:** For Internal drives to be connected to DL servers please make sure that you order rack mount kit as well.	
	HP StoreEver LTO-5 Ultrium 3280 SAS Internal Tape Drive **NOTE:** For installation into 3U SAS rack kit (AG576B). No peripheral bay available for installation into the server. Connection using HP P212 Smart Array Controller SAS (462828-B21) recommended.	EH899B
	HP StoreEver LTO-6 Ultrium 6250 Tape Drive in 1U Rack-mount Kit	C0L99A
	HP StoreEver LTO-6 Ultrium 6650 SAS Internal Tape Drive	EH963A
	HP StoreEver LTO-6 Ultrium 6650 SAS External Tape Drive	EH964A
	HP StoreEver LTO-6 Ultrium 6250 Internal Tape Drive	EH969A
	HP StoreEver LTO-6 Ultrium 6250 External Tape Drive	EH970A
	HP StoreEver 1/8 G2 LTO-6 Ultrium 6250 FC Tape Autoloader	C0H19A
HP Tape Storage Systems	**HP StoreEver MSL6480**	
	HP StoreEver MSL6480 Scalable Base Module	QU625A
	NOTE: Please see the QuickSpecs for Technical Specifications and additional information: http://h18000.www1.hp.com/products/quickspecs/14604_div/14604_div.html (Worldwide)	
HP Disk Backup	**NOTE:** For the complete range of RDX drives and media see: http://www.hp.com/go/rdx. For hardware and software compatibility of HP disk backup products see: http://www.hp.com/storage/SPOCK.	
	HP RDX Removable Disk Backup System	
	HP RDX320 USB3.0 External Disk Backup System	B7B63A
	HP RDX500 USB3.0 Internal Disk Backup System	B7B64A
	HP RDX500 USB3.0 External Disk Backup System	B7B66A
	HP RDX1000 USB3.0 Internal Disk Backup System	B7B67A
	HP RDX1000 USB3.0 External Disk Backup System	B7B69A
	HP RDX 2TB USB3.0 Internal Disk Backup System	E7X52A
	HP RDX 2TB USB3.0 External Disk Backup System	E7X53A
	NOTE: Please see the QuickSpecs for additional part numbers, Technical Specifications, and additional information: http://h18000.www1.hp.com/products/quickspecs/13036_div/13036_div.html (Worldwide)	

Additional Options

HP Disk Storage Systems	**Disk Enclosures**	
	HP D2600 w/12 4TB 6G SAS 7.2K LFF Dual Port MDL HDD 48TB Bundle	E7W32A
	NOTE: Please see the QuickSpecs for Technical Specifications and additional information: http://h18000.www1.hp.com/products/quickspecs/13404_div/13404_div.html (Worldwide)	
HP Storage Options	**Storage Fibre Channel HBA**	
	NOTE: The following is a list of all Fibre Channel Host Bus Adapters for Windows and Linux. For detailed compatibility information please see: http://h18006.www1.hp.com/storage/saninfrastructure/hba.html	
	Brocade Fibre Channel HBAs	
	HP 81B 8Gb 1-port PCIe Fibre Channel Host Bus Adapter	AP769B
	HP 82B 8Gb 2-port PCIe Fibre Channel Host Bus Adapter	AP770B
	Emulex Fibre Channel HBAs	
	HP 81E 8Gb 1-port PCIe Fibre Channel Host Bus Adapter	AJ762B
	HP 82E 8Gb 2-port PCIe Fibre Channel Host Bus Adapter	AJ763B
	HP StoreFabric SN1100E 16Gb Single Port Fibre Channel Host Bus Adapter	C8R38A
	HP StoreFabric SN1100E 16Gb Dual Port Fibre Channel Host Bus Adapter	C8R39A
	QLogic Fibre Channel HBAs	
	HP 81Q 8Gb 1-port PCIe Fibre Channel Host Bus Adapter	AK344A
	HP 82Q 8Gb 2-port PCIe Fibre Channel Host Bus Adapter	AJ764A
	HP StoreFabric SN1000Q 16GB 1-port PCIe Fibre Channel Host Bus Adapter	QW971A
	HP StoreFabric SN1000Q 16GB 2-port PCIe Fibre Channel Host Bus Adapter	QW972A
	Converged Network Adapter	
	HP CN1100E Dual Port Converged Network Adapter	BK835A
	HP CN1000Q Dual Port Converged Network Adapter	BS668A
HP Disk Storage Systems	**Disk Enclosures**	
	HP D2600 Disk Enclosure	AJ940A
	HP D2700 Disk Enclosure	AJ941A
	NOTE: Please see the QuickSpecs for additional options and configuration information at: http://h18000.www1.hp.com/products/quickspecs/13404_div/13404_div.html (Worldwide)	
HP Data Center Racks	**HP 11000 G2 Series Racks**	
	HP 11642 1075mm Pallet Universal Rack	H6J65A
	HP 11642 1075mm Shock Universal Rack	H6J66A
	HP 11642 1200mm Pallet Universal Rack	H6J67A
	HP 11642 1200mm Shock Universal Rack	H6J68A
	HP 11648 1075mm Pallet Universal Rack	H6J87A
	HP 11648 1075mm Shock Universal Rack	H6J88A
	HP 11842 1200mm Pallet Universal Rack	H6J69A
	HP 11842 1200mm Shock Universal Rack	H6J70A
	HP Intelligent Series Rack	
	HP 636 1075mm Pallet Intelligent Series Rack	BW895A

Additional Options

	HP 636 1075mm Shock Intelligent Series Rack	BW896A
	HP 642 1075mm Pallet Intelligent Series Rack	BW903A
	HP 642 1075mm Shock Intelligent Series Rack	BW904A
	HP 647 1075mm Pallet Intelligent Series Rack	BW911A
	HP 647 1075mm Shock Intelligent Series Rack	BW912A
	HP Location Discovery Services	
	HP 47U Location Discovery Kit	BW947A
	HP 42U Location Discovery Kit	BW946A
	HP 36U Location Discovery Kit	BW945A
	NOTE: For additional information regarding the full line of HP Data Center Racks and rack accessories please see the following URL: http://www.hp.com/go/rackandpower.	
HP Power Distribution Units (PDUs)	**HP Basic Power Distribution Units (bPDU)**	
	HP 2.8kVA 120 Volt L5-30 Input (18xNEMA 5-20) NA/JP Basic PDU	H5M55A
	HP 3.6kVA 200-240 Volt Detachable C20 Input (18xC13) WW Basic PDU	H5M57A
	HP 4.9kVA 208 Volt L6-30 Input (20xC13) NA/JP Basic PDU	H5M58A
	HP 4.9kVA 208 Volt L6-30 Input (24xC13/6xC19) NA/JP Basic PDU	H5M59A
	HP 5.7kVA 208 Volt L21-20 3-Phase Input (20xC13/3xNEMA 5-20R) NA/JP Basic PDU	H5M63A
	HP 7.3kVA 230 Volt IEC309 32A Input (20xC13) INTL Basic PDU	H5M68A
	HP 7.3kVA 230 Volt IEC309 32A Input (24xC13/6xC19) INTL Basic PDU	H5M70A
	HP 8.6kVA 208 Volt L15-30 3-Phase Input (24xC13/6xC19) NA/JP Basic PDU	H5M62A
	HP 8.6kVA 208 Volt L21-30 3-Phase Input (20xC13/3xC19/3xNEMA 5-20R) NA/JP Basic PDU	H5M64A
	HP 11kVA 400 Volt IEC309 16A 3-Phase Input (30xC13/6xC19) INTL Basic PDU	H5M72A
	HP Remote Monitoring Power Distribution Units (mPDU)	
	HP 2.8kVA 120 Volt L5-30 Input (12xNEMA 5-20R)NA/JP Monitored PDU	D9N43A
	HP 3.6kVA 200-240 Volt Detachable C20 Input (16xC13) WW Monitored PDU	D9N45A
	HP 4.9kVA 208 Volt L6-30 Input (20xC13/4xC19) NA/JP Monitored PDU	D9N47A
	HP 5.7kVA 208 Volt L21-20 3-Phase Input (18xC13/3xNEMA 5-20R) NA/JP Monitored PDU	D9N52A
	HP 7.3kVA 230 Volt IEC309 32A Input (20xC13/4xC19) INTL Monitored PDU	D9N48A
	HP 7.3kVA 230 Volt IEC309 32A Input (32xC13/4xC19) INTL Monitored PDU	D9N50A
	HP 8.6kVA 208 Volt L15-30 3-Phase Input (18xC13/3xC19) NA/JP Monitored PDU	D9N51A
	HP 8.6kVA 208 Volt L21-30 3-Phase Input (20xC13/3xC19/3xNEMA 5-20R) NA/JP Monitored PDU	D9N53A
	HP 11kVA 400 Volt IEC309 16A 3-Phase Input (30xC13/3xC19) INTL Monitored PDU	D9N57A
	HP 17.3kVA 208 Volt IEC309 60A 3-Phase Input (24xC13/3xC19) NA/JP Monitored PDU	D9N54A
		E2D53A
	NOTE: The HP Environmental Sensor collects temperature and humidity information in the rack and can be monitored via the local LCD display or remotely using Telnet or a standard web interface. The sensor can also monitor the status of two user supplied contact devices.	
	HP Intelligent Power Distribution Units (iPDU)	
	HP 4.9kVA 24A Single Phase NA/JP Core Intelligent Modular Power Distribution Unit	AF520A
	HP 7.3kVA 32A Single Phase INTL Core Intelligent Modular Power Distribution Unit	AF525A
	HP 8.6kVA 24A Three Phase NA/JP Core Intelligent Modular Power Distribution Unit	AF522A
	HP 11kVA 16A Three Phase INTL Core Intelligent Modular Power Distribution Unit	AF526A
	HP 17.3kVA 48A Three Phase NA/JP Core Intelligent Modular Power Distribution Unit	AF523A
	HP 22kVA 32A Three Phase INTL Core Intelligent Modular Power Distribution Unit	AF527A

Additional Options

iPDU Extension Bars

HP 5xC13 Intelligent PDU Extension Bar G2 Kit	AF547A

NOTE: Intelligent Extensions Bars have individually monitored outlets that are also individually switchable for power cycling attached equipment. Each individual C13 outlet has Power Line Communications to support Intelligent Power Discovery when connected to PLC enabled common slot power supplies.

HP 5xC13 Outlets Power and UID LEDs Pair Standard Extension Bar	AF528A

NOTE: Standard (non-intelligent) Extension Bars are monitored as a single load segment and do not support Intelligent Power Discovery. Standard Extension Bars for HP iPDUs include a blue unit ID LED (UID) which helps associate the load segment being monitored with the Extension bar.

Power Discovery Services Enabled power cables for HP iPDU

HP C13 - C14 WW 250V 10Amp IPD 1.37m 5pc Jumper Cord	SG509A
HP C13 - C14 WW 250V 10Amp IPD 1.83m 5pc Jumper Cord	SG511A
HP C13-C14 WW 250V 10Amp Pwr Line 2.5m 5pc Jumper Cord	D9Y25A

NOTE: For additional information regarding the full line of HP Power Distribution Units, please see the following URL: http://www.hp.com/go/rackandpower.

HP Rack Mount Consoles and KVM Switches

HP TFT7600 G2 KVM Console and Monitor

HP TFT7600 G2 KVM Console Rackmount Keyboard US Monitor	AZ870A
HP TFT7600 G2 KVM Console Rackmount Keyboard US TAA Monitor	AZ885A
HP TFT7600 G2 KVM Console Rackmount Keyboard Intl Monitor	AZ884A
HP TFT7600 G2 KVM Console Rackmount Keyboard UK Monitor	AZ871A
HP TFT7600 G2 KVM Console Rackmount Keyboard FR Monitor	AZ873A
HP TFT7600 G2 KVM Console Rackmount Keyboard DE Monitor	AZ872A

HP KVM Server Console Switches

HP Server Console 0x2x8 Port Analog Switch	AF616A
HP Server Console 0x2x16 Port Analog Switch	AF617A
HP TAA 0x2x16xKVM Server Console G2 Switch	AF626A

HP KVM Server Console Switch G2 with Virtual Media & CAC

HP 0x2x16 KVM Server Console Switch G2 with Virtual Media CAC Software	AF618A
HP 0x2x32 KVM Server Console Switch G2 with Virtual Media CAC Software	AF619A

HP IP KVM Console Switch G2 with Virtual Media & CAC

HP 1x1Ex8 KVM IP Console Switch G2 with Virtual Media CAC Software	AF620A
HP 2x1Ex16 KVM IP Console Switch G2 with Virtual Media CAC Software	AF621A
HP 4x1Ex32 KVM IP Console Switch G2 with Virtual Media CAC Software	AF622A

HP KVM Interface Adapters

HP KVM Console USB Interface Adapter	AF628A
HP KVM Console USB 2.0 Virtual Media CAC Interface Adapter	AF629A
HP KVM Console Serial/Power G2 Interface Adapter	AF625A

NOTE: For additional information on the full line of HP KVM Switches and Rack Mount Consoles please see the following URL: http://www.hp.com/go/rackandpower.

HP Uninterruptible Power Systems (UPS)

HP R1500 G3 Uninterruptible Power Supply (UPS)

HP R1.5kVA G3 1U NA Uninterruptible Power System	AF469A
HP R1.5kVA G3 1U JP/TW Uninterruptible Power System	AF470A
HP R1.5kVA G3 1U INTL Uninterruptible Power System	AF471A
HP R1500 G4 NA Uninterruptible Power System	J2Q99A
HP R1500 G4 INTL Uninterruptible Power System	J2R03A

Additional Options

	HP R1500 G4 JP/TWN Uninterruptible Power System	J2R05A
	HP R/T2000 Uninterruptible Power System (UPS)	
	HP R/T2200 G4 NA/JP Uninterruptible Power System	J2R00A
	HP R/T2200 G4 Extended Runtime Module	J2R09A
	HP 2U Rack/Tower UPS Shipping Kit	L4Q11A
	HP R/T3000 G2 Uninterruptible Power System (UPS)	
	HP R/T3000 G2 2U L530 Low Voltage NA/JP Uninterruptible Power System	AF466A
	HP R/T3000 G2 2U L620 High Voltage NA/JP Uninterruptible Power System	AF467A
	HP R/T3000 G2 2U Detachable Cord High Voltage INTL Uninterruptible Power System	AF468A
	HP R/T3000 G4 Low Voltage NA/JP Uninterruptible Power System	J2R01A
	HP R/T3000 G4 High Voltage NA/JP Uninterruptible Power System	J2R02A
	HP R/T3000 G4 High Voltage INTL Uninterruptible Power System	J2R04A
	HP R/T3000 G4 Extended Runtime Module	J2R10A
	R5000 Uninterruptible Power System (UPS)	
	HP R5KVA 3U IEC309-32A High Voltage INTL Uninterruptible Power System	AF461A
	HP R5KVA 3U L630 High Voltage NA/JP Uninterruptible Power System	AF460A
	R7000 Uninterruptible Power System (UPS)	
	HP R7KVA 4U 50A High Voltage NA/JP Uninterruptible Power System	AF462A
	HP R7KVA 4U IEC-32A High Voltage INTL Uninterruptible Power System	AF463A
	NOTE: For additional information on the full line of HP Uniterruptible Power Systems please see the following URL: http://www.hp.com/go/rackandpower.	
HP USB Keyboard and Mouse	HP USB BFR with PVC Free IN Keyboard/Mouse Kit	672097-D63
	HP USB BFR with PVC Free AP-Intl Keyboard/Mouse Kit	672097-373
	HP USB BFR with PVC Free Intl Keyboard/Mouse Kit	672097-B33
	HP USB BFR with PVC Free PT Keyboard/Mouse Kit	672097-133
	HP USB BFR with PVC Free TR Keyboard/Mouse Kit	672097-143
	HP USB BFR with PVC Free CZ Keyboard/Mouse Kit	672097-223
	HP USB BFR with PVC Free FI Keyboard/Mouse Kit	672097-353
	HP USB BFR with PVC Free SE Keyboard/Mouse Kit	672097-103
	HP USB BFR with PVC Free CH Keyboard/Mouse Kit	672097-113
	HP USB BFR with PVC Free KR Keyboard/Mouse Kit	672097-KD3
	NOTE: Please see the QuickSpecs for Technical Specifications and additional information: http://h18000.www1.hp.com/products/quickspecs/13972_div/13972_div.html (Worldwide)	
HP USB and SD Options	**HP Flash Media Kits for USB Drives**	
	NOTE: HP qualified blank USB key for use with HP ProLiant servers that support the VMware virtualization environment and other HP value-add software. HP recommends this industry standard USB flash device for use with VMware ESXi. USB device must be installed in the internal slot of the ProLiant server for use with VMware ESXi. Refer to HP VMware Getting Started Guide for installation instructions.	
	HP 8GB USB Enterprise Mainstream Flash Media Drive Key Kit	737953-B21
	HP Enterprise Mainstream Flash Media Kits for Memory Cards	
	HP 8GB SD Enterprise Mainstream Flash Media Kit	726113-B21
	NOTE: Please see the QuickSpecs for Technical Specifications and additional information: http://h18000.www1.hp.com/products/quickspecs/13971_div/13971_div.html	

Additional Options

	Other USB and SD Options	
	HP USB Standard Keyboard DT528A ABA	DT528A#ABA
HP Care Pack Services	**Proactive Care**	
	NOTE: Collaborative Support plus Proactive services delivered by the onshore, local language Advanced Solution Center (ASC), end-to-end case ownership from a Technical Solution Specialists and Technical Account Manager who remotely delivers firmware/software revision management, proactive scans and incident trend reports. Recommended for customers running a virtualized infrastructure and/or customers who desire an enhanced call support experience.	
	HP 3 year 4 hour 24x7 ProLiant DL58x Proactive Care Service	U2Z68E
	HP 3 year 4 hour 24x7 with Defective Media Retention ProLiant DL58x Proactive Care Service	U2Z71E
	HP 3 year 6 hour Call To Repair 24x7 ProLiant DL58x Proactive Care Service	U2Z74E
	HP 3 year 6 hour Call To Repair 24x7 withDefective Media Retention ProLiant DL58x Proactive Care SVC	U2Z77E
	Collaborative Support	
	NOTE: Hardware break/fix plus 24x7 software diagnosis support with collaborative call management for a broad spectrum of 3rd Party software products including O/S and hypervisors. Recommended for customers procuring 3rd party SW O/S and hypervisors from the software vendors directly and deploying them on HP ProLiant servers.	
	HP 3 year 4 hour 24x7 ProLiant DL58x Collaborative Support	U1J48E
	HP 3 year 4 hour 24x7 with Defective Media Retention ProLiant DL58x Collaborative Support	U1J51E
	HP 3 year 6 hour Call To Repair 24x7 ProLiant DL58x Collaborative Support	U1J54E
	HP 3 year 6hr Call To Repair 24x7 withDefective Media Retention ProLiant DL58x Collaborative Support	U1J57E
	Proactive Care Personalized Support Option	
	NOTE: To add an onsite Account Support Manager (ASM) to Proactive Care. ASM is an assigned resource who delivers support planning and brings technical expertise and best practices advices for the customer's environment.	
	HP 3 year ISS ProactiveCare Personalized Support	U6W98E
	Installation Services	
	NOTE: Reduce the time required to get your system up and running and help minimize disruptions to your business.	
	HP 3 year 4 hour 24x7 ProLiant D58x Hardware Support	U4608E
	HP Install ProLiant DL58x Service	U4617E
	HP Startup ProLiant DL58x Service	U4618E
	HP Installation and Startup for Insight Control Server Deployment - previously Rapid Deployment Pack	U5683E
	NOTE: For more information, customer/resellers can contact: http://www.hp.com/services/carepack	

Memory

NOTE: Memory configurations listed do not apply to "Factory Integrated Models".

HP ProLiant DL580 G7

Memory Subsystem Architecture

Intel® Xeon® processor E7 and 7500 series memory architecture is designed to take advantage of multiple stages of memory interleaving to reduce latency and increase bandwidth.

Each processor contains two Memory Controllers as shown in the Processor/Memory interconnect figure below. Each Memory controller has two Scalable Memory Interface (SMI) buses operating in lockstep where each SMI bus connects to a memory buffer. The purpose of the buffer is to convert SMI to DDR3. Each buffer has two DDR3 channels and can support up to four DIMMs for a total of eight DIMMs per cartridge.

- Memory speed is not affected by number of DIMMs or ranks. All DIMMs will run at the highest possible speed for a given processor.
- DDR3 memory speed is a function of the processors QPI bus speed such that
  - Processors with a QPI speed of 6.4GT will run memory at 1066MHz
  - Processors with a QPI speed of 5.6GT will run memory at 978MHz
  - Processors with a QPI speed of 4.8GT will run memory at 800 MHz

DIMM Installation guidelines

Each memory cartridge can support up to 8 DIMMs, for a system total of 64 DIMMs. When installing DIMM modules in the Memory Cartridge observe the following minimum guidelines:

- UDIMMs are not supported
- Minimum allowable configuration is two DIMMs per cartridge.
- DIMMs must be installed in pairs with identical characteristics. For configuration simplicity HP recommends using identical part numbered DIMMs throughout when possible.
- DIMM pairs MUST be populated in sequence by letter designation. Install DIMM pair 1A, 8A first followed by DIMM pair 3B, 6B then DIMM pair 2C, 7C and DIMM pair 4D, 5D last.
- Maximum performance is achieved by balancing DIMM pairs by letter groupings across all memory cartridges. Such that the 1A, 8A pair is install in all memory cartridges first (see diagram below) followed by the B pair, C pair and D pair.
- AMP modes Online Sparing and Memory Mirroring have further requirements beyond these listed here. Please refer to the user guide for additional memory configuration requirements.

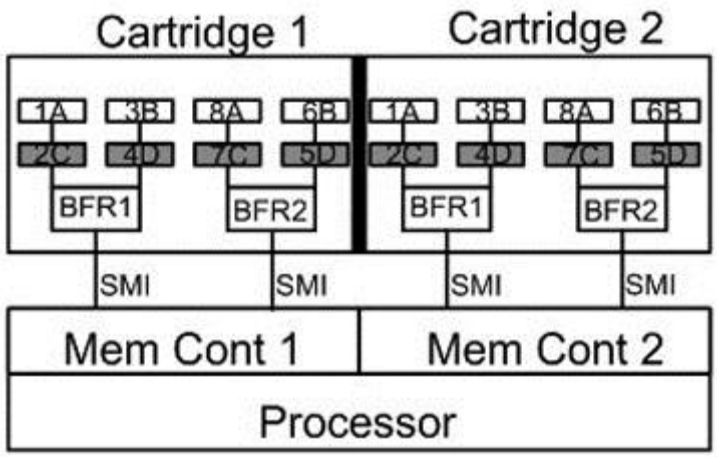

Figure 1 Processor/Memory interconnect

Illustration of how the processor, cartridges and DIMMs are electrically connected.

Memory Cartridge population guidelines

Memory

This server contains 8 memory cartridge slots in the processor memory drawer. Observe the following guidelines:

- Populate memory cartridge slots for a processor only if the processor is installed where:
  - Processor 1 connects to cartridge slots 1 and 2.
  - Processor 2 connects to cartridge slots 3 and 4.
  - Processor 3 connects to cartridge slots 5 and 6.
  - Processor 4 connects to cartridge slots 7 and 8.
- Minimum recommended cartridge population is one cartridge per processor. For best performance two cartridges per processor are recommended.
- Processors installed without corresponding memory cartridges will incur high memory access latencies and is not recommended.
- To maximize performance in multi-processor configurations distribute the total memory capacity evenly between all processors.

Hemisphere mode
The architecture incorporates hemisphere mode, a high performance interleaving technology. Hemisphere mode allows interleaving between the two processor memory controllers internal to each processor.

Hemisphere mode is enabled when all processors in a system have the memory behind both memory controllers populated identically.

- To enable each processor to enter hemisphere mode it must have both cartridges installed, populated with equal memory capacities and follow the DIMM installation guidelines.

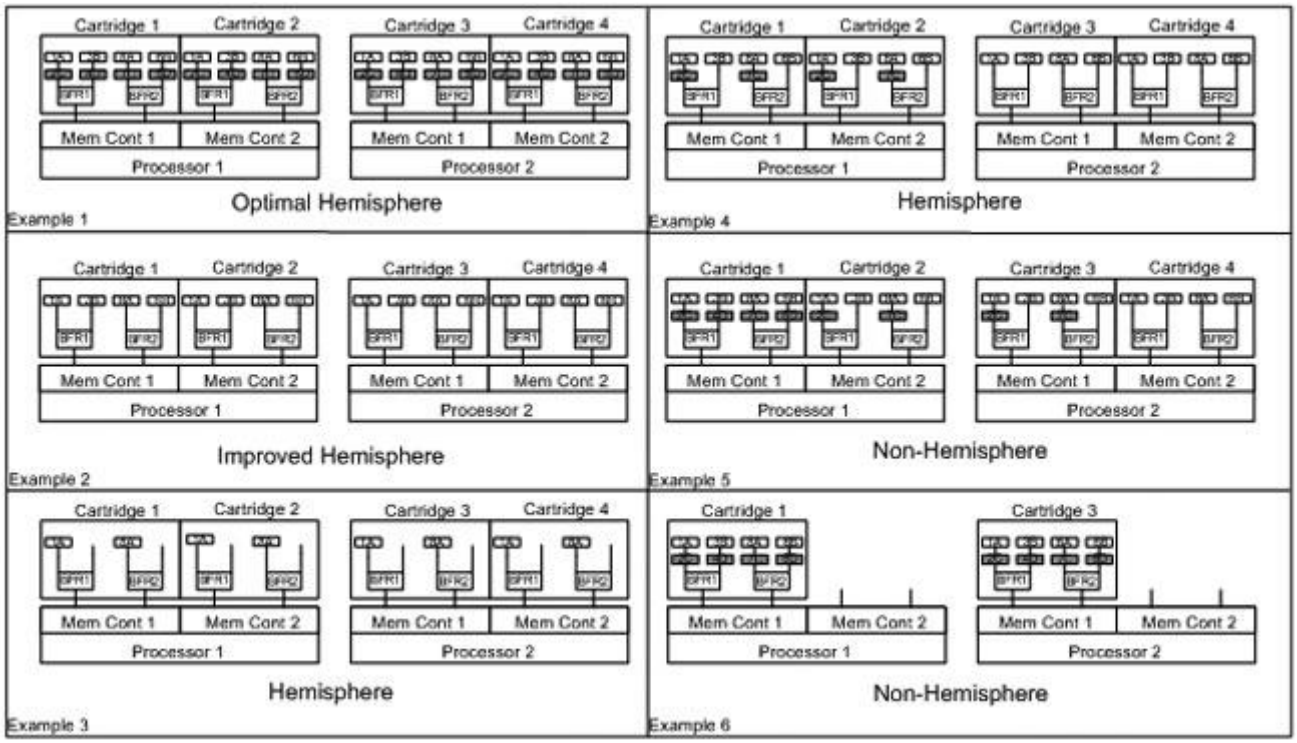

Figure 2 Hemisphere Population Diagram
Examples of Hemisphere vs Non-Hemisphere populations.

Memory Performance Optimization
The DL580 G7 supports 64 DIMMs across four multi-core processors. While there are many DIMM population configurations that can support any desired total memory size, optimal performance can only be achieved when DIMMs are populated to take

Memory

advantage of the architecture. Reference the Figure: Hemisphere Population Diagram to achieve the best performance for a given memory/processor configuration.

- The largest contributor to maximum memory bandwidth performance is to utilize both memory controllers inside the processor. This is achieved by populating both memory cartridges for each installed processor.
- The second largest contributor to performance is to populate each DDR3 channel in each memory cartridge. To achieve this, the minimum DIMM count per cartridge is four. Maximum bandwidth is reached by fully populating all memory cartridges with the maximum number of eight DIMMs per cartridge.
- Best performance is obtained when all installed processors are enabled for Hemisphere mode. HP recommends two memory boards per processor- each one with at least 4 DIMMs- for improved memory bandwidth
- Hemisphere mode is optimum when four or eight DIMMs are installed per cartridge. Hemisphere mode can be reached with two or six DIMMs per cartridge (2 cartridges per processor) but it is not optimal configuration for Hemisphere mode.
- Plan your memory configurations using Identical DIMMs to reach your memory size target taking into account that 32 and 64 DIMM count configurations result in the highest performance. For a 4 processor example:
  - If initial memory target is 64GB then populate a 4 processor system with eight cartridges of 4 - 2GB DIMMs each for a total of 32 DIMMs. Your maximum expansion target is 128GB with 64 2GB DIMMs.
  - For 4GB DIMMs your initial memory target is 128GB using 32 DIMMs. Your maximum expansion target is 256GB with 64 DIMMs.
  - For 8GB DIMMs your initial memory target is 256GB using 32 DIMMs. Your maximum expansion target is 512GB with 64 DIMMs.
  - Maximum system memory capability is reached with an initial memory target of 512GB with 32 - 16GBDIMMs and 2TB with 64 32GB DIMMs.
- The more ranks per DIMM the higher the performance such that Quad rank DIMMs perform better than dual rank DIMMs.

NOTE: Memory configurations listed do not apply to "Factory Integrated Models". Only registered (RDIMM) speeds of 1066 or 1333 running at 1066 are supported and must be installed in pairs. UDIMMs are not supported.

HP Memory	**Registered DIMMs (RDIMMs)**	
	HP 2GB (1x2GB) Dual Rank x8 PC3-10600 (DDR3-1333) Registered CAS-9 Memory Kit **NOTE:** Only supported with the Intel® Xeon® Processor 7500 series processors	500656-B21
	HP 4GB (1x4GB) Dual Rank x4 PC3-10600 (DDR3-1333) Registered CAS-9 Memory Kit	500658-B21
	HP 4GB (1x4GB) Single Rank x4 PC3L-10600 (DDR3-1333) Registered CAS-9 Low Power Memory Kit	604504-B21
	HP 8GB (1x8GB) Dual Rank x4 PC3-10600 (DDR3-1333) Registered CAS-9 Memory Kit	500662-B21
	HP 8GB (1x8GB) Dual Rank x4 PC3L-10600 (DDR3-1333) Registered CAS-9 Low Power Memory Kit	604506-B21
	HP 16GB (1x16GB) Dual Rank x4 PC3L-10600 (DDR3-1333) Registered CAS-9 LP Memory Kit	627812-B21
	HP 32GB (1x32GB) Quad Rank x4 PC3L-8500 (DDR3-1066) Registered CAS-7 LP Memory Kit **NOTE:** PC3L DIMMs are only supported with the Intel® Xeon® Processor E7 series processors and require (E7) memory cartridge. **NOTE:** PC3L is a low-voltage memory.	627814-B21
	Memory Expansion Options	
	HP DL580G7/DL980G7 (E7) Memory Cartridge **NOTE:** Four memory cartridges come standard in the HP ProLiant DL580 G7 (E7) Configure-to-order Server (643086-B21), each kit contains one cartridge and a maximum of (8) are supported in the server. See Memory Performance Optimization in the Memory section for configuration guidelines.	644172-B21

Storage

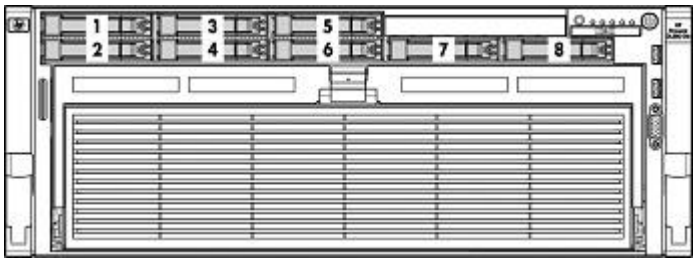

1-8 SFF SAS Internal Drive cage

Drive Support

	Quantity Supported	Position Supported	Controller
Optical Drives			
Slimline DVD-ROM drive	Up to 1	1	Integrated SATA
HP Slim SATA DVD RW Optical Drive	Up to 1	1	Integrated SATA

External Storage

	Quantity Supported	Position Supported	Host Controller or Adapter
D2600 Disk Enclosure	Up to 8	External	HP Smart Array P411/256MB BBWC Controller HP Smart Array P411/512 MB BBWC Controller HP Smart Array P812/1G Flash Backed Cache Controller
D2700 Disk Enclosure	Up to 4	External	HP Smart Array P411/256 MB Controller HP Smart Array P411/512 MB BBWC Controller HP Smart Array P812/1G Flash Backed Cache Controller

Maximum Storage Capacity - (External SAS Enclosure Attached)

Internal	9.6TB (8 x 1.2TB SFF SAS/SATA Drives)
External	960TB (80 MSA60 enclosures x 12 drive bays each x 1TB SATA Drives)

Tape and Disk-Based Backup

NOTE: For the complete range of tape drives, autoloaders, libraries and media, including the internal fitting models, see: http://www.hp.com/go/tape. For the complete range of D2D Backup Systems see: http://www.hp.com/go/d2d. For the complete range of RDX drives and media see: http://www.hp.com/go/rdx. For hardware and software compatibility of HP disk and tape backup products see: http://www.hp.com/storage/SPOCK.

	Position	Recommended Controller	Controller Part Number
HP SCSI Tape Drives LTO-1 Ultrium 232 LTO-2 Ultrium 448 LTO-3 Ultrium 920 LTO-3 Ultrium 960 LTO4 Ultrium 1760 LTO-4 Ultrium 1840 DAT 40 DAT 72 DAT 160 1U Rack-Mount Kit	External	HP SC11Xe Ultra320 Single Channel/ PCIe x4 SCSI Host Bus Adapter	412911-B21

Storage

3U Rack-Mount Kit

HP USB Tape Drives DAT 40 DAT 72 DAT 160 DAT 320 1U USB Rack-Mount Kit	External	USB 2.0 Port	N/A
HP SAS Tape Drives DAT 160 DAT 320 LTO-2 Ultrium 448 LTO-3 Ultrium 920 LTO-4 Ultrium 1760 LTO-4 Ultrium 1840 LTO-5 Ultrium 3000 LTO-5 Ultrium 3280 1U Rack-Mount Kit 3U Rack-Mount Kit	External	HP Smart Array P212/ZM 1-ports Int/1-ports Ext PCIe x8 SAS Controller	462828-B21
HP SCSI Tape Autoloaders DAT 72x10 Autoloader 1/8 G2 Autoloader	External	HP SC11Xe Ultra320 Single Channel/ PCIe x4 SCSI Host Bus Adapter	412911-B21
HP SAS Tape Autoloaders and Libraries 1/8 G2 Autoloader MSL2024 MSL4048 MSL8096	External	HP Smart Array P212/ZM 1-ports Int/1-ports Ext PCIe x8 SAS Controller	462828-B21
HP Fibre Channel Tape Libraries MSL2024 MSL4048 MSL8096 MSL6000	External	Please consult the EBS connectivity matrix at: http://www.hp.com/go/ebs for connectivity information and the supported Fibre Channel HBAs shown in this QuickSpec.	
HP USB RDX Removable Disk Backup System RDX160 RDX320 RDX500 RDX750 RDX1TB	External	USB 2.0 port	N/A
HP D2D Backup Systems, iSCSI D2D2500i D2D4000i	External	Embedded Network Controller. If the server requires a hardware iSCSI initiator, the QLogic QLA4050 Host Bus Adapter is recommended.	

Storage

HP D2D Backup Systems, Fibre Channel D2D4000fc	External	Direct server attach is not supported, requires connection via SAN fabric. See: http://www.hp.com/storage/SPOCK

Power Specifications

HP 1200W Common Slot Silver Hot Plug Power Supply Kit							
Part Number	500172-B21						
Input Voltage Range (V rms)	100 to 240						
Frequency Range (Nominal) (Hz)	50/60						
Nominal Input Voltage (Vrms)	**100**	**120**	**200**	**208**	**220**	**230**	**240**
Maximum Rated Output Wattage Rating	800	900	1200	1200	1200	1200	1200
Nominal Input Current (A rms)	9.7	9.0	7.0	6.8	6.4	6.1	5.9
Maximum Rated Input Wattage Rating (Watts)	930	1034	1348	1348	1348	1348	1348
Maximum Rated VA (Volt-Amp)	970	1079	1406	1406	1406	1406	1406
Efficiency (%)	86	86	89	89	89	89	89
Power Factor	0.97						
Leakage Current (mA)	0.42	0.50	0.83	0.87	0.92	0.96	1.00
Maximum Inrush Current (A peak)	30						
Maximum Inrush Current duration (mS)	20						
Maximum British Thermal Unit Rating (BTU-Hr)	3174	3530	4600	4600	4600	4600	4600

HP 1200W Common Slot Platinum Hot Plug Power Supply Kit							
Part Number	578322-B21						
Input Voltage Range (V rms)	100 to 240						
Frequency Range (Nominal) (Hz)	50/60						
Nominal Input Voltage (Vrms)	**100**	**120**	**200**	**208**	**220**	**230**	**240**
Maximum Rated Output Wattage Rating	800	900	1200	1200	1200	1200	1200
Nominal Input Current (A rms)	9.3	8.6	6.7	6.5	6.1	5.8	5.6
Maximum Rated Input Wattage Rating (Watts)	889	989	1290	1290	1290	1290	1290
Maximum Rated VA (Volt-Amp)	927	1031	1345	1345	1345	1345	1345
Efficiency (%)	90	91	93	93	93	93	93
Power Factor	0.97						
Leakage Current (mA)	0.42	0.50	0.83	0.87	0.92	0.96	1.00
Maximum Inrush Current (A peak)	30						
Maximum Inrush Current duration (mS)	20						
Maximum British Thermal Unit Rating (BTU-Hr)	3033	3375	4403	4403	4403	4403	4403

NOTE: To review typical system power ratings use the HP Power Advisor which is available online located at url: www.hp.com/go/proliant-energy-efficient or www.hp.com/go/hppoweradvisor

Technical Specifications

System Unit	**Dimensions** (H x W x D) (with bezel)	6.94" x 19.0" x 27.55" (17.6cm x 48.3cm x 70.0cm)	
	Weight (approximate)	Maximum (all hard drives, power supplies, DIMMs and processors installed)	100.0 lb (45.4 kg)
		Minimum (one hard drive, two power supplies, four DIMMs, and two processors installed)	66.0 lb (30.0 kg)
	Input Requirements (per power supply)	Rated Line Voltage	100 - 127 VAC, 200 - 240 VAC
		Rated Input Current	12 A (at 100 VAC), 8 A (at 200 VAC)
		Rated Input Frequency	50 to 60 Hz
		Rated Input Power	1161 W (at 100 VAC), 1598 W (at 240 VAC)
	BTU Rating	Maximum	3960 BTU/hr (at 100 VAC), 5450 BTU/hr (at 200 VAC)
	Power Specifications	**NOTE:** To review typical system power ratings use the HP Power Advisor which is available online located at url: www.hp.com/go/proliant-energy-efficient or www.hp.com/go/hppoweradvisor - Click on the system of interest. Example: DL580 G7 - Follow the instructions of the next screens.	
	Power Supply Output (per power supply)	Rated Steady-State Power	910 W (low line), 1300 W (high line)
		Maximum Peak Power	910 W (low line), 1300 W (high line)
	System Inlet Temperature	Operating	10° to 35°C (50° to 95°F) at sea level with an altitude derating of 1.0°C per every 304.8 m (1.8°F per every 1000 ft) above sea level to a maximum of 3048 m (10,000 ft), no direct sustained sunlight. Maximum rate of change is 10°C/hr (18°F/hr). The upper limit may be limited by the type and number of options installed. System performance may be reduced if operating with a fan fault or above 30°C (86°F).
		Non-operating	-30° to 60°C (-22° to 140°F). Maximum rate of change is 20°C/hr (36°F/hr).
	Relative Humidity (non-condensing)	Operating	10 to 90% relative humidity (Rh), 28°C (82.4°F) maximum wet bulb temperature, non-condensing.
		Non-operating	5 to 95% relative humidity (Rh), 38.7°C (101.7°F) maximum wet bulb temperature, non-condensing.
	Altitude	Operating	3048 m (10,000 ft). This value may be limited by the type and number of options installed. Maximum allowable altitude change rate is 457 m/min (1500 ft/min).

		Non-operating	9144 m (30,000 ft). Maximum allowable altitude change rate is 457 m/min (1500 ft/min).
	Acoustic Noise	Listed are the declared A-Weighted sound power levels (LWAd) and declared average bystander position A-Weighted sound pressure levels (LpAm) when the product is operating in a 23°C ambient environment. Noise emissions were measured in accordance with ISO 7779 (ECMA 74) and declared in accordance with ISO 9296 (ECMA 109).	
		Idle	
		L WAd	6.4 B (with PCI-E)
		L pAm	NA dBA
		Operating	
		L WAd	6.8 B (with PCI-E)
		L pAm	NA dBA
	Emissions Classification (EMC)	**FCC Rating**	Class A
		Normative Standards	CISPR 22; EN55022; EN55024; FCC CFR 47, Pt 15; ICES-003; CNS13438; GB9254; K22;K24; EN 61000-3-2; EN 61000-3-3; EN 60950-1; IEC 60950-1
		NOTE: Product conformance to cited product specifications is based on sample (type) testing, evaluation, or assessment. This product or family of products is eligible to bear the appropriate compliance logos and statements.	

Integrated Lights-Out 3 (iLO 3) integrated on system board	**Architecture**	PCI Express based health and remote management ASIC
	Processor	PCI Express RISC processor core running at 250MHz
	Upgradeability	Option firmware upgradeable via Flash ROM.
	Interfaces	One Ethernet Sideband connection (10/100/1000 Mb/s)
		One Ethernet network connection (10/100Mb/s)
	Memory	128-MB RAM with ECC
	Operating System Support	Microsoft Windows 2008 R2
		Microsoft Windows 2008 (32 bit and 64 bit)
		Microsoft Windows Server 2008 Standard Edition (32bit and 64bit)
		Microsoft Windows Server 2008 Enterprise Edition (32bit and 64bit)
		Microsoft Windows Server 2003 and Windows Server 2003 R2, and Windows Server 2003 for Extended Systems Standard Edition, Enterprise Edition
		Red Hat Enterprise Linux 5.4 (32 bit and 64 bit)
		SUSE LINUX Enterprise Server 11 (32bit and 64bit)
		SUSE LINUX Enterprise Server 10 (32bit and 64bit)
		VMware ESX 4.0
		VMware ESX 3.5.0
		Solaris
	Client System Support	Microsoft Windows 7
		Microsoft Windows XP Professional Edition
		Microsoft Windows Vista Business and Ultimate Editions
		Red Hat Enterprise Desktop 5.00

Technical Specifications

		SUSE Linux Enterprise Desktop 11
		SUSE Linux Enterprise Desktop 10
	Client Browser Support	Microsoft Internet Explorer 8
		Microsoft Internet Explorer 7
		Microsoft Internet Explorer 6
		Firefox 3.5 (on supported Windows and Linux systems)
		Firefox 3.0 (on supported Windows and Linux systems)
	Command Line Support	Secure Shell and serial port access
		Secure Socket Layer
		Secure Shell version 2
	Security	Advanced Encryption Standard (AES) and Triple Data Encryption Standard (3DES) on browser, CLP and XML scripting interface
		AES encryption of video
		RC4 encryption of video
	Directory Support Services	Active Directory v1.0 (Windows 2003)
	Driver Support	HP ProLiant iLO3 Management Controller Driver Package
	Management protocols supported	SNMP, IPMI 2.0 (system and LAN interface), DMTF Systems Management Architecture for Server Hardware Command Line Protocol (SMASH CLP), HP RIBCL XML
Smart Array P410i Controller	**Dimensions**	Embedded
	Disk Drive and Enclosure Interface - Transfer rate	6Gb/s SAS (Serial Attached SCSI) 3Gb/s SATA (Serial ATA)
	SAS Connectors	2 internal 4X connectors
	Cache Memory Speed	DDR2-800MHz with 40 or 72-bit wide bus
	Server Interface	x4 PCIe 2.0 provides 2GB/s maximum bandwidth
	SAS Speed	8 6Gb/s SAS links provide 4.8GB/s maximum bandwidth
	Cache Memory	Zero Memory RAID has no cache memory 40-bit 256MB ECC protected cache (battery upgrade available) 72-bit 512MB BBWC or 72-bit 512MB and 1G FBWC
	Logical Drives Supported	Zero Memory, Up to 2 logical volumes (8 physical drives) Up to 64 logical drives with cache
	Host Memory Addressing	64-bit, supporting greater than 4GB server memory space
	RAID Support	RAID 6, 6+0 (Advanced Data Guarding) **NOTE:** RAID 6, 6+0 can be enabled with one of the following combinations: • 256 MB cache, Battery kit and Smart Array Advanced Pack License key option upgrades • 512 MB BBWC/FBWC and Smart Array Advanced Pack License key option upgrades • 1G FBWC and Smart Array Advanced Pack License key option upgrades RAID 5, 5+0 (Distributed Data Guarding) **NOTE:** A minimum or 256 MB cache is required to enable RAID 5, 5+0

		support	
		RAID 1+0 (Striping & Mirroring)	
		RAID 0 (Striping), RAID 1 (Mirroring)	
HP NC375i Integrated Quad Port Gigabit Server Adapter	**Network Interface**	10Base-T/100Base-TX/1000Base-TX	
	Compatibility	IEEE 802.3 10Base-T IEEE 802.3ab 1000Base-T IEEE 802.3u 100Base-TX IEEE 802.3ad 1000Base-TX IEEE 802.1p 100Base-TX IEEE 802.1q 100Base-TX	
	Data Transfer Method	PCI-Express 2.0 x8	
	Controller	Qlogic/NetXen NX3031	
	Network Transfer Rate	10Base-T (Full-Duplex)	20 Mb/s
		100Base-TX (Full-Duplex)	200 Mb/s
		1000Base-TX (Full-Duplex)	2000 Mb/s
	Connector	RJ-45	
	Cable Support	10Base-T	Categories 3, 4, or 5 UTP; up to 328 ft (100 m)
		100Base-TX	Category 5 or higher UTP; up to 328 ft (100 m)
		1000Base-TX	Category 5 or higher UTP; up to 328 ft (100 m)
Environment-friendly Products and Approach	**End-of-life Management and Recycling**	Hewlett-Packard offers end-of-life HP product return, trade-in, and recycling programs in many geographic areas. For trade-in information, please go to: http://www.hp.com/go/green. To recycle your product, please go to: http://www.hp.com/go/green or contact your nearest HP sales office. Products returned to HP will be recycled, recovered or disposed of in a responsible manner. The EU WEEE directive (2002/95/EC) requires manufacturers to provide treatment information for each product type for use by treatment facilities. This information (product disassembly instructions) is posted on the Hewlett Packard web site at: http://www.hp.com/go/green. These instructions may be used by recyclers and other WEEE treatment facilities as well as HP OEM customers who integrate and re-sell HP equipment.	

Summary of Changes

Date	Version History	Action	Description of Change:
09-Feb-2015	From Version 51 to 52	Changed	Core Options section was updated.
		Added	Skus Added on HP Uninterruptible Power Systems (UPS) • J2Q99A • J2R00A • J2R01A • J2R02A • J2R03A • J2R04A • J2R05A • J2R09A • J2R10A • L4Q11A
01-Dec-2014	From Version 50 to 51	Changed	Core Options and Additional Options
		Added	Sku Added on Hard Drives: • 757351-B21 • 756666-B21 • 756651-B21 • 756630-B21 • 756611-B21
		Removed	Obsolete skus deleted: 581201-B21
01-Nov-2014	From Version 49 to 50	Changed	Service and Support section was updated
18-Aug-2014	From Version 48 to 49	Changed	Hard Drives were revised.
10-Jun-2014	From Version 47 to 48	Changed	**Hard Drives, HP Insight Software, HP Graphics Options, HP Tape Backup, HP Disk Backup, and HP USB and SD Options were revised**.
31-Mar-2014	From Version 46 to 47	Changed	Hard Drives, HP Insight Software, HP Graphics Options, HP Tape Backup, HP Disk Backup, and HP USB and SD Options were revised.
13-Dec-2013	From Version 45 to 46	Changed	HP Insight Control including 1yr 24x7 Support ProLiant ML/DL/BL-bundle FIO Electronic License was added to Insight Software HP Tape Storage Systems and HP Disk Storage Systems were added to Additional Options HP 1.2TB 6G SAS 10k rpm SFF SC Dual Port Enterprise 3yr Warranty Hard Drive was added and 3G SATA MLC Hot Plug SFF and LFF Enterprise Mainstream Solid State Drives were removed from Hard Drives HP Basic Power Distribution Units, HP Remote Monitoring Power Distribution Units, and HP Intelligent Power Distribution Units were revised in Additional Options HP 10 GbE PCI-e G2 Dual Port Network Interface Card was removed from HP Networking HP InfiniBand 4X DDR ConnectX-2 PCIe G2 Dual Port HCA was removed from HP InfiniBand HP Power Distribution Units was removed from Additional Options
11-Oct-2013	From Version 44 to 45	Changed	HP 300GB and 600GB 6G SATA Value Endurance SFF Enterprise Boot Solid State Drives were added to Hard Drives HP PCIe Workload Accelerator Options and HP Remote Monitoring Power Distribution Units were added to Additional Options HP 8GB SD Enterprise Mainstream Flash Media Kit was added to HP USB and SD Options First Generation Accelerators were removed from HP I/O

Summary of Changes

			Accelerators
10-Sep-2013	From Version 43 to 44	Changed	HP Insight Management, High Performance Clusters, Processors, Hard Drives, HP Networking, HP InfiniBand, Power Distribution Units, HP Intelligent Power Distribution Units (iPDU), and HP Rack Options were revised
02-Aug-2013	From Version 42 to 43	Changed	Changes made to the Standard Features, Configuration Information and Options sections.
25-Jul-2013	From Version 41 to 42	Changed	A correction was made to a NOTE in Step 2 of the Configuration Information section.
15-Jul-2013	From Version 40 to 41	Changed	HP Disk Backup was revised in Additional Options.
10-Jul-2013	From Version 39 to 40	Added	Added 721458-B21 to the HP I/O Accelerator Options section.
25-Mar-2013	From Version 38 to 39	Added	Configuration Information: Added a NOTE to the HP Power Supplies section. Core Options: Added a NOTE to the HP Power Supplies section.
		Removed	Additional Options: Removed 641027-B21, 600282-B21 and 600279-B21 from the HP I/O Accelerator Options.
22-Feb-2013	From Version 37 to 38	Removed	Removed a discontinued part number.
19-Feb-2013	From Version 36 to 37	Changed	Changes were made in Standard Features, Optional Features, Configuration Information - Factory Integrated Models, Core Options, Additional Options and Storage sections.
07-Dec-2012	From Version 35 to 36	Added	Added 6G SAS ME Hot Plug SFF (2.5-inch) Enterprise Mainstream Solid State Drives Added two new HBAs to HP Storage Options Added an additional HP Intelligent Power Distribution Units (iPDU) section
		Changed	Updated Standard Features/Network Controllers Updated High Performance Models and Base Models Updated the name of the Network Controller in Configuration Information/Step 1 Updated HP Insight Management Software throughout the document. Updated the last few category names in Hard Drives Updated the descriptions in Configuration Information/HP Performance Packs Updated p/n descriptions for two p/ns in High Performance Clusters Revised HP Power Cords Revised HP Tape Backup and HP Disk Backup Combined the last two categories in the HP UPS section. Revised HP Rack Options, specifically the Keyboards and Monitors section, USB Keyboard and Mouse section, HP Server Console Switch G2 with Virtual Media & CAC and HP IP Console Switch G2 with Virtual Media & CAC Updated several p/n descriptions in HP Power Distribution Units section.
		Removed	Removed HP Insight Control for Linux including 1yr 24x7 Support ML/DL Bundle 1 Server FIO License from Configuration Information Step 3. Removed 6G SAS Hot Plug Enterprise Mainstream Solid State Drives from the Hard Drives section Removed HP InfiniBand 4X DDR ConnectX-2 PCIe G2 Dual Port HCA Removed HP Intelignt Mod PDU 3ph 40a Na/Jpn Core
24-Sep-2012	From Version 34 to 35	Changed	Changes were made in Optional Features section.

Summary of Changes

24-Aug-2012	From Version 33 to 34	Changed	Changes were made in Core Options, Additional Options, Memory and Storage sections.
13-Aug-2012	From Version 32 to 33	Changed	Changes made throughout the QuickSpec.
08-Jun-2012	From Version 31 to 32	Changed	Changes made in the Cord Options and Additional Options.
17-May-2012	From Version 30 to 31	Changed	Changes made in the Standard Features and Options sections.
26-Mar-2012	From Version 29 to 30	Changed	Part numbers were revised in High Performance Clusters New models were added to HP Insight Software, HP Disk Backup and HP Intelligent Power Distribution Units
06-Mar-2012	From Version 28 to 29	Changed	Changed a link in the Hard Drives section of Core Options.
13-Feb-2012	From Version 27 to 28	Changed	Changes made in the Options sections only.
13-Jan-2012	From Version 26 to 27	Changed	URL was revised in Tape and Disk Backup HP CN1000Q Dual Port Converged Network Adapter was added to HP Storage Options
02-Dec-2011	From Version 24 to 26	Changed	An update was made in HP Networking.
14-Nov-2011	From Version 23 to 24	Changed	Changes were made throughout Core and Additional Options.
10-Oct-2011	From Version 22 to 23	Removed	HP CN1000Q Dual Port Converged Network Adapter was removed from HP Storage Options.
26-Sep-2011	From Version 21 to 22	Changed	Service and Support and Hard Drives were revised Product descriptions were revised throughout Additional Options Hot Plug SFF SATA SSD maximum internal storage was added
30-Aug-2011	From Version 20 to 21	Removed	Removed SATA Hot Plug SFF (2.5-inch) Entry (ETY) Drives from the Hard Drives and Storage sections.
02-Aug-2011	From Version 19 to 20	Added	Added part number 604504-B21 to the Memory sections.
29-Jul-2011	From Version 18 to 19	Changed	Hard Drive descriptions were revised.
12-Jul-2011	From Version 17 to 18	Added	Added part number 604504-B21 to the Memory sections.
24-Jun-2011	From Version 16 to 17	Changed	Changes made throughout the QuickSpec.
09-May-2011	From Version 15 to 16	Changed	Processor descriptions were revised Hot Plug SFF SAS And SATA maximum internal storage were increased to 8.0TB HP 2GB Dual Rank x4 PC3-10600 Registered CAS-9 Memory Kit was added to Memory HP 900GB 6G SAS 10K rpm SFF Enterprise Drive was added to Hard Drives HP Intelligent Power Distribution Units (iPDU) was added to Additional Options
25-Apr-2011	From Version 14 to 15	Removed	HP 250GB 3G SATA 7.2K rpm SFF Midline Drive was removed from Hard Drives.
		Changed	Changes made in the Technical Specifications section.
06-Apr-2011	From Version 13 to 14	Changed	A Note was added to the Processors sections.
05-Apr-2011	From Version 12 to 13	Changed	Maximum memory was increased to 2TB What's New was added to the Overview Ten-Core Processors, Intel Xeon Processors E7-8837, E7-4830, E7-4820 and E7-4807 were added to Processors 30MB Level 3 cache was added to Cache Memory Double data Device Correction - DDDC (Ready) was added to Memory Protection High Performance Clusters was added to Optional Features and Additional Options Part number 643086-B21 was added to Models HP 8GB and 16GB Dual Rank x4 PC3L-10600 Registered CAS-9 Low Power Memory Kits, HP 32GB Quad Rank x4 PC3L-10600 Registered CAS-7 LP Memory Kit and HP DL580G7/DL980G7 (E7) Memory Cartridge were added to Memory HP Slim SATA DVD-ROM Optical Drive was added to Optical

Summary of Changes

			Drives HP 1TB 6G SAS 7.2K rpm SFF Hot plug Midline, HP 250GB and 1TB 3G SATA 7.2K rpm SFF Hot plug Midline and SATA Non-hot Plug Midline (MDL) Solid State Drives were added to Hard Drives Enablement Kits was added to HP Networking Support Plus was removed from HP Care Pack Services
16-Feb-2011	From Version 11 to 12	Changed	Model, HP Power Supplies, HP Insight Software, HP Tape Backup, HP StorageWorks Options, HP Uninterruptible Power Systems and HP Rack Series product descriptions were revised HP 1.2TB MLC PCIe ioDrive Duo was added to HP I/O Accelerator Options HP StorageWorks RDX750 Internal Removable Disk Backup System was removed from HP Disk Backup
10-Jan-2011	From Version 10 to 11	Changed	HP NC523SFP 10Gb 2-port Server Adapter was added to HP Networking HP CN1000Q 2P Converged Network Adapter was added to HP StorageWorks Options Oracle Enterprise Linux (OEL) was removed from Operating Systems and Virtualization Software for ProLiant Servers HP InfiniBand 4X DDR PCI-E Dual Port Host Adapter was removed from HP InfiniBand
23-Nov-2010	From Version 9 to 10	Changed	Smart Array P812 Controller product description was revised.
18-Nov-2010	From Version 8 to 9	Changed	Note for Power Supplies was revised Smart Array P410i Controller was completely revised HP Management DVD and HP ProLiant Smart Update Firmware DVD were added to HP Insight management software HP StorageWorks RDX 1TB Internal Removable Disk Backup System was added to HP Disk Backup HP 10642G2 and 10647G2 1200mm deep Rack cabinet Shock Rack were added to HP Rack Series
28-Oct-2010	From Version 7 to 8	Changed	Changed the description for part numbers 588156-L21 & 588156-B21.
05-Oct-2010	From Version 6 to 7	Changed	Introduction was added and At A Glance was removed from the Overview Cache Memory and Upgradeability were added and Storage Data Protection, Availability, Serviceability, Security Trusted Platform Module, UPS and PDU Power Cord Matrix, Required Cabling, Rack Airflow Requirements, Rack Kit and Telco Rack Support were removed from Standard Features Storage was changed to Internal Storage Devices Hot Plug SFF SAS Maximum Internal Storage was increased to 4.8TB HP Insight management software, Solutions, Factory Express Portfolio for Servers and Storage and HP Enterprise Configurator were moved into Optional Features Models was changed to Pre-configured Models and was completely revised Note at the beginning of Configuration Information - Factory Integrated Models and Core Options was modified Processor, Storage Controller and HP Tape Backup product descriptions were revised HP 450GB and 600GB 6G SAS 10K rpm SFF Dual Port Enterprise Hard Drives and SATA Hot Plug SF Entry Drives

Summary of Changes

			were added and HP 72GB 3G SAS 15K rpm SFF Dual Port Enterprise Hard Drive was removed from Hard Drives HP Slim SATA DVD-ROM Optical Drive was removed from Optical Drives HP StorageWorks D2D4009 Backup System was removed from HP Disk Backup
		Added	Flash Backed Write Cache was added to Storage Controller in Standard Features HP 1200W Common Slot High Efficiency Power Supply Kit was added to Power Supplies HP 10 GbE PCI-e G2 Dual Port NIC was added to HP Networking HP InfiniBand was added to Core Options Note was added to DL580G7 PCI-X / PCI Express I/O Exp. Kit in HP I/O Expansion Options HP Graphics Options was added to Additional Options Note was added to the beginning of Additional Options, HP Security - TPM, HP Uninterruptible Power Systems, HP Power Distribution Units and HP Rack Series
16-Aug-2010	From Version 5 to 6	Changed	PCIE 1.0a Compliant was changed to PCIE 2.0 Compliant in Industry Standard Compliance Not all models are available in all regions. Check with your local country HP offices for availability note was added to the beginning of Models HP Slim SATA DVD-ROM Optical Drive was added to HO Optical Drives HP I/O Accelerator Options was added to Additional Options
13-Jul-2010	From Version 4 to 5	Changed	Corrected a Note in the North America and Canada versions.
25-Jun-2010	From Version 3 to 4	Changed	Images callouts were revised Processor speed was changed to 2.26 for the Intel Xeon 7560 Processor Network RJ-45 was increased to 4 in Interfaces Oracle Solaris was added and Solaris was removed from Citrix XenServer description in Operating Systems and Virtualization Software Support for ProLiant Servers Models were updated NOTE was added to Maximum Internal Storage Type HP Power Supplies were added to Step 2, HP Storage Controllers were added to Step 3 and Step 4 was added to Configuration Information HP Slim SATA DVD RW Optical Drive was removed
22-Jun-2010	From Version 2 to 3	Changed	Power Supplies, HP Tape Backup and HP Disk Backup were completely revised Processors were completely revised in Step 2 Hot Plug SFF SDD Maximum Internal Storage was added

© Copyright 2015 Hewlett-Packard Development Company, L.P.

The information contained herein is subject to change without notice.

Microsoft and Windows NT are US registered trademarks of Microsoft Corporation. Unix is a registered trademark of The Open Group.
Intel, the Intel logo, Xeon and Xeon Inside are trademarks of Intel Corporation in the U.S. and other countries.

The only warranties for HP products and services are set forth in the express warranty statements accompanying such products and services. Nothing herein should be construed as constituting an additional warranty. HP shall not be liable for technical or

Summary of Changes

editorial errors or omissions contained herein.

For hard drives, 1GB = 1 billion bytes. Actual formatted capacity is less.