HP ProLiant DL585 Generation 5 Server User Guide



Part Number 463282-002
September 2009 (Second Edition)

© Copyright 2007, 2009 Hewlett-Packard Development Company, L.P.

The information contained herein is subject to change without notice. The only warranties for HP products and services are set forth in the express warranty statements accompanying such products and services. Nothing herein should be construed as constituting an additional warranty. HP shall not be liable for technical or editorial errors or omissions contained herein.

Microsoft, Windows, and Windows NT are U.S. registered trademarks of Microsoft Corporation. Windows Server 2003 is a trademark of Microsoft Corporation.

Intended audience

This document is for the person who installs, administers, and troubleshoots servers and storage systems. HP assumes you are qualified in the servicing of computer equipment and trained in recognizing hazards in products with hazardous energy levels.

Contents

Component identification 6
- Front panel components 6
- Front panel LEDs and buttons 7
- Processor memory module components 8
- DIMM slot identification 9
- SAS and SATA hard drive LEDs 9
- SAS and SATA hard drive LED combinations 10
- Rear panel components 11
- Rear panel LEDs and buttons 12
- Hot-plug power supply LEDs 12
- Internal components 13
  - System maintenance switch (SW3) 14
  - Media board components 15
  - Boot device selector switch (SW1) 16
  - Systems Insight Display LEDs 16
  - Battery pack LEDs 18
  - Fan locations 19
  - Hot-plug fan LEDs 20

Setup 21
- Optional installation services 21
- Rack planning resources 21
- Optimum environment 22
  - Space and airflow requirements 22
  - Temperature requirements 22
  - Power requirements 23
- Rack warnings and cautions 23
- Electrical grounding requirements 24
- Identifying rack server shipping carton contents 25
- Installing hardware options 25
- Installing the server into the rack 25
- Installing the cable management arm 25
- Powering up and configuring the server 25
- Installing the operating system 26
- Registering the server 26

Operations 27
- Power up the server 27
- Power down the server 27
- Extending the server from the rack 27
- Removing the access panel 28
- Accessing the Systems Insight Display 29
- Hot-plug fans 29
- Removing the system battery 30

Hardware options installation 32
- Introduction 32

Processor options 32
Removing the processor memory module 32
Installing a processor 34
Memory options 40
Advanced ECC memory 40
Installing DIMMs 40
Hard drive guidelines 42
Installing a hot-plug hard drive 42
Installing DVD, CD-ROM, or diskette drives 43
Hot-plug power supplies 45
Expansion boards 46
Installing an expansion board 47
Battery-backed write cache 48
Cabling 53
Cabling overview 53
BBWC cabling 53
Front panel cable components 54
SAS and SATA hard drive cabling 54
Software and configuration utilities 55
Configuration tools 55
SmartStart software 55
SmartStart Scripting Toolkit 55
HP ROM-Based Setup Utility 56
HP ProLiant Essentials Rapid Deployment Pack 57
Option ROM Configuration for Arrays 57
Array Configuration Utility 58
Re-entering the server serial number and product ID 58
Management tools 59
Automatic Server Recovery 59
Integrated Lights-Out 2 technology 59
StorageWorks library and tape tools 59
Management Agents 60
HP Systems Insight Manager 60
Redundant ROM support 60
ROMPaq utility 61
System Online ROM flash component utility 61
USB support 61
Diagnostic tools 62
HP Insight Diagnostics 62
Integrated Management Log 62
Array Diagnostic Utility 62
Remote support and analysis tools 63
HP Insight Remote Support software 63
Keeping the system current 63
Drivers 63
ProLiant Support Packs 64
Operating system version support 64
Change control and proactive notification 64
Care Pack 64
Troubleshooting 65
Troubleshooting resources 65

Pre-diagnostic steps 65
Important safety information 65
Symptom information 67
Prepare the server for diagnosis 68
Loose connections 68
Service notifications 69
Troubleshooting flowcharts 69
Start diagnosis flowchart 69
General diagnosis flowchart 70
Server power-on problems flowchart 72
POST problems flowchart 75
OS boot problems flowchart 76
Server fault indications flowchart 78
POST error messages and beep codes 80
Regulatory compliance notices 81
Regulatory compliance identification numbers 81
Federal Communications Commission notice 81
FCC rating label 81
Class A equipment 81
Class B equipment 81
Declaration of conformity for products marked with the FCC logo, United States only 82
Modifications 82
Cables 82
Canadian notice (Avis Canadien) 83
European Union regulatory notice 83
Disposal of waste equipment by users in private households in the European Union 83
Japanese notice 84
BSMI notice 85
Korean notice 85
Laser compliance 85
Battery replacement notice 86
Taiwan battery recycling notice 86
Power cord statement for Japan 86
Electrostatic discharge 87
Preventing electrostatic discharge 87
Grounding methods to prevent electrostatic discharge 87
Specifications 88
Environmental specifications 88
Server specifications 88
Technical support 90
Before you contact HP 90
HP contact information 90
Customer Self Repair 90
Acronyms and abbreviations 98
Index 102

Component identification

Front panel components

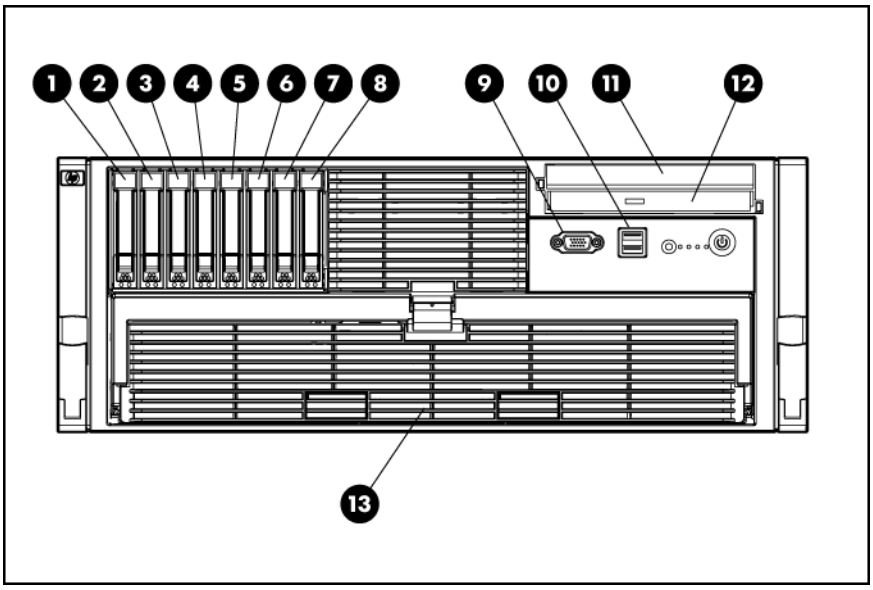

Item	Description
1	Hard drive bay 1
2	Hard drive bay 2
3	Hard drive bay 3
4	Hard drive bay 4
5	Hard drive bay 5
6	Hard drive bay 6
7	Hard drive bay 7
8	Hard drive bay 8
9	Video connector
10	USB connectors (two)
11	Media drive blank or optional media drive
12	DVD drive
13	Processor memory module

Front panel LEDs and buttons

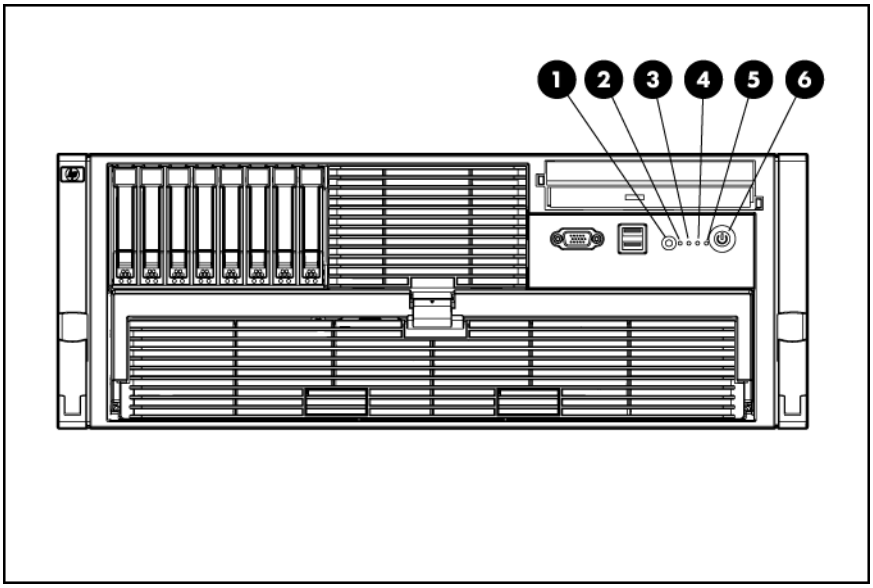

Item	Description	Status
1	UID switch and LED	Blue = Activated Flashing blue = Server managed remotely Off = Deactivated
2	Internal system health LED	Green = Normal (system on) Flashing amber = System health degraded Flashing red = System health critical Off = Normal (system off)
3	External system health LED	Green = Normal (system on) Flashing amber = System health degraded Flashing red = System health critical Off = Normal (system off)
4	NIC 1 link/activity LED	Green = Linked to network Flashing green = Linked with activity on the network Off = No network connection
5	NIC 2 link/activity LED	Green = Linked to network Flashing green = Linked with activity on the network Off = No network connection
6	Power on/Standby button and LED	Amber = System has AC power and is in standby mode Green = System has AC power and is turned on Off = System has no AC power

Processor memory module components

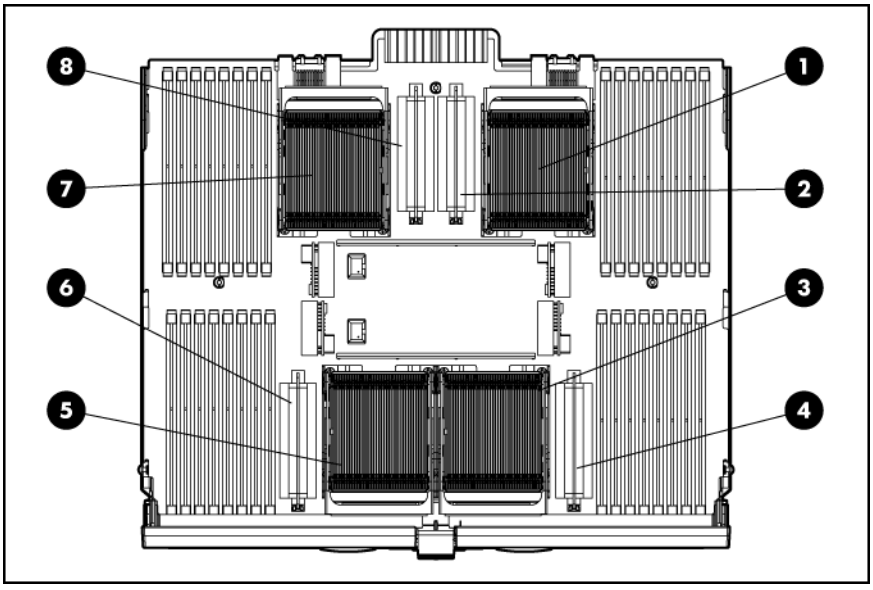

Item	Description
1	Processor socket 1 (boot processor)
2	PPM socket 1
3	Processor socket 3
4	PPM socket 3
5	Processor socket 4
6	PPM socket 4
7	Processor socket 2
8	PPM socket 2

See "Processor options (on page 32)" for population guidelines.

DIMM slot identification

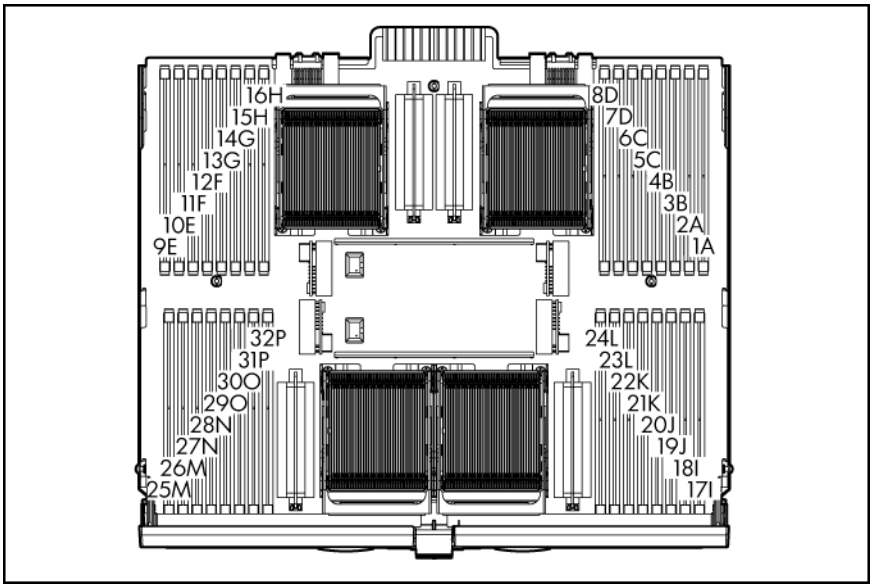

Each memory node consists of eight DIMM slots in four banks. See "Memory options" for DIMM population guidelines.

SAS and SATA hard drive LEDs

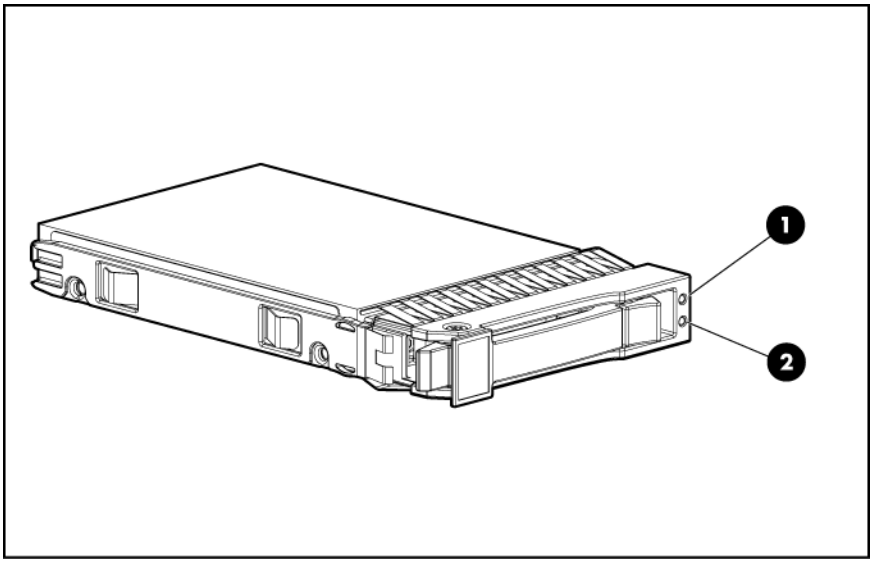

Item	Description	Status
1	Fault/UID LED	Amber = Drive failure Flashing amber = Fault-process activity Blue = Unit identification is active Off = No fault-process activity
2	Online/activity LED	Green = Drive activity Flashing green = High activity on the drive or drive is being configured as part

Item	Description	Status
		of an array Off = No drive activity

SAS and SATA hard drive LED combinations

Online/activity LED (green)	Fault/UID LED (amber/blue)	Interpretation
On, off, or flashing	Alternating amber and blue	The drive has failed, or a predictive failure alert has been received for this drive; it also has been selected by a management application.
On, off, or flashing	Steadily blue	The drive is operating normally, and it has been selected by a management application.
On	Amber, flashing regularly (1 Hz)	A predictive failure alert has been received for this drive. Replace the drive as soon as possible.
On	Off	The drive is online, but it is not active currently.
Flashing regularly (1 Hz)	Amber, flashing regularly (1 Hz)	**Do not remove the drive. Removing a drive may terminate the current operation and cause data loss.** The drive is part of an array that is undergoing capacity expansion or stripe migration, but a predictive failure alert has been received for this drive. To minimize the risk of data loss, do not replace the drive until the expansion or migration is complete.
Flashing regularly (1 Hz)	Off	**Do not remove the drive. Removing a drive may terminate the current operation and cause data loss.** The drive is rebuilding, or it is part of an array that is undergoing capacity expansion or stripe migration.
Flashing irregularly	Amber, flashing regularly (1 Hz)	The drive is active, but a predictive failure alert has been received for this drive. Replace the drive as soon as possible.
Flashing irregularly	Off	The drive is active, and it is operating normally.
Off	Steadily amber	A critical fault condition has been identified for this drive, and the controller has placed it offline. Replace the drive as soon as possible.
Off	Amber, flashing regularly (1 Hz)	A predictive failure alert has been received for this drive. Replace the drive as soon as possible.
Off	Off	The drive is offline, a spare, or not configured as part of an array.

Rear panel components

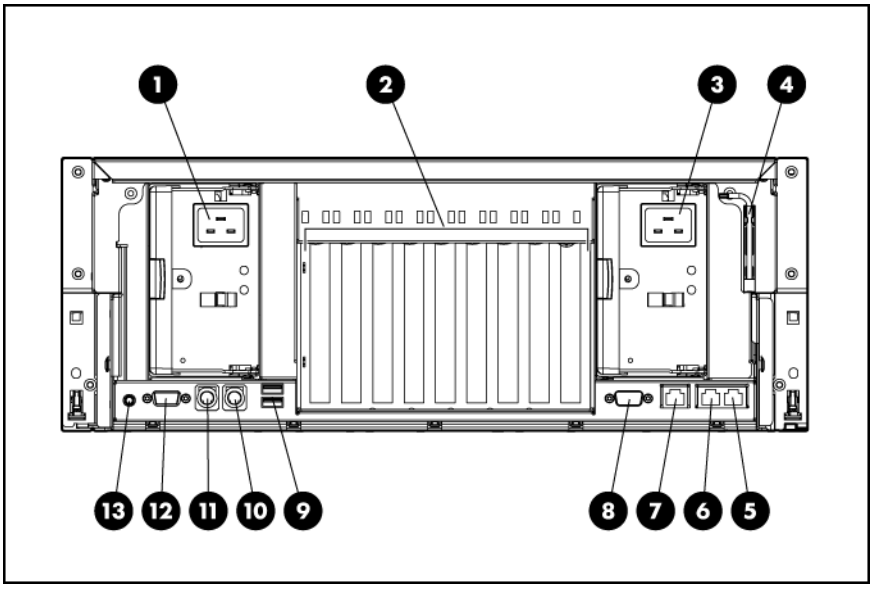

Item	Description
1	Redundant hot-plug power supply (optional)
2	PCI Express and PCI-X non-hot-plug expansion slots
3	Hot-plug power supply (primary)
4	T-15 Torx screwdriver
5	NIC connector 1
6	NIC connector 2
7	iLO 2 connector
8	Serial connector
9	USB connectors (two)
10	Keyboard connector
11	Mouse connector
12	Video connector
13	Rear UID button and LED

See "Expansion boards (on page 46)" for expansion slot definitions.

Rear panel LEDs and buttons

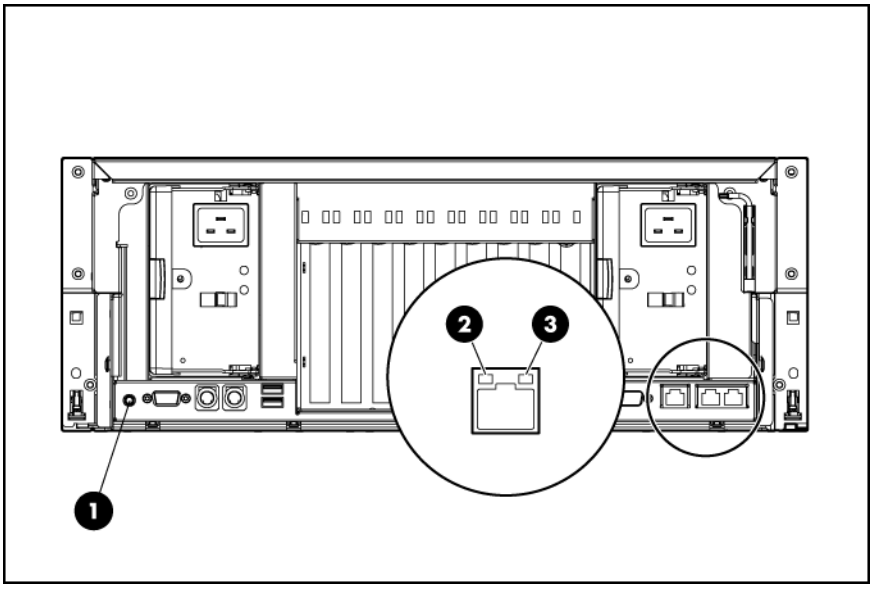

Item	Description	LED color	Status
1	UID LED	Blue	On = Activated Flashing = Server remotely managed Off = Deactivated
2	Activity LED	Green	On or flashing = Network activity Off = No network activity
3	Link LED	Green	On = Linked to network Off = Not linked to network

Hot-plug power supply LEDs

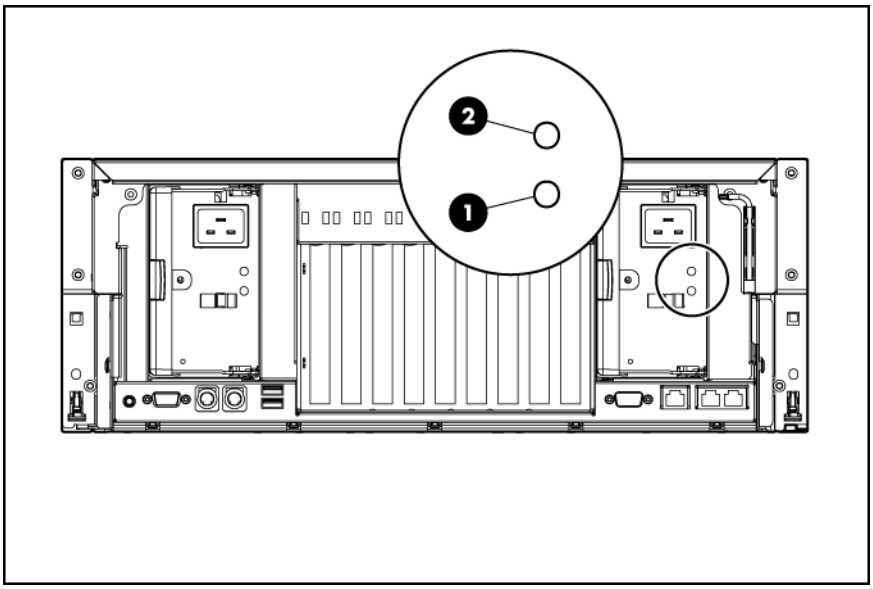

Fail LED 1 (amber)	Power LED 2 (green)	Description
Off	Off	No AC power to any power supply
Flashing	Off	Power supply failure (over current)
On	Off	No AC power to this power supply
Off	Flashing	• AC power present • Standby mode
Off	On	Normal

Internal components

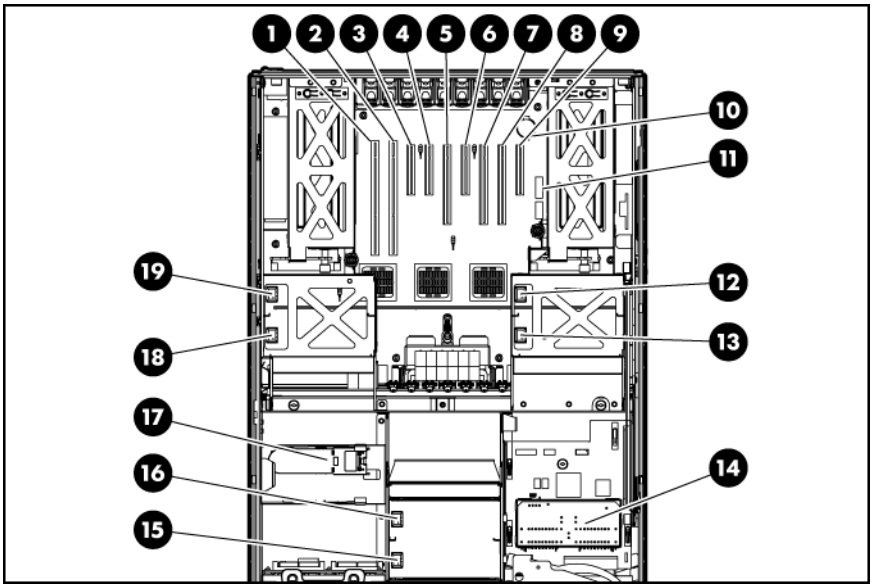

Item	Description
1	PCI-X non-hot-plug expansion slot 1, 64-bit/100-MHz (half-length)
2	PCI-X non-hot-plug expansion slot 2, 64-bit/100-MHz (full-length)
3	PCI Express x4 non-hot-plug expansion slot 3 (full-length)
4	PCI Express x4 non-hot-plug expansion slot 4 (full-length)
5	PCI Express x8 non-hot-plug expansion slot 5 (full-length)
6	PCI Express x4 non-hot-plug expansion slot 6 (full-length)
7	PCI Express x8 non-hot-plug expansion slot 7 (full-length)
8	PCI Express x8 non-hot-plug expansion slot 8 (full-length)
9	PCI Express x4 non-hot-plug expansion slot 9 (half-

Item	Description
	length)
10	System battery
11	System maintenance switch (SW3)
12	Fan 6 connector
13	Fan 5 connector
14	Media board
15	Fan 1 connector
16	Fan 2 connector
17	BBWC battery pack
18	Fan 3 connector
19	Fan 4 connector

System maintenance switch (SW3)

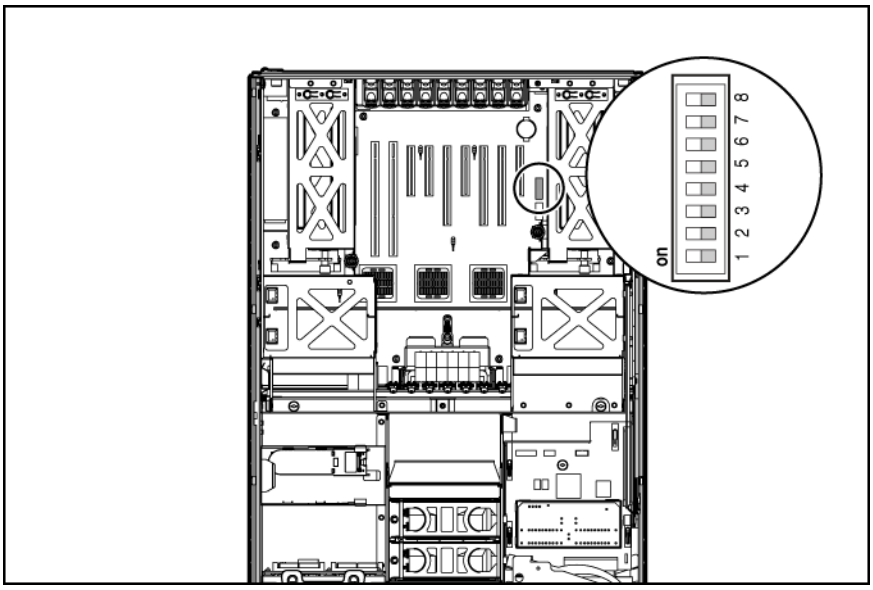

The system maintenance switch (SW3) is an eight-position switch that is used for system configuration. The default position for all eight positions is Off (closed).

Position	Description	Function
1	iLO 2 security	Off = iLO 2 security is enabled. On = iLO 2 security is disabled.
2	Configuration lock	Off = System configuration can be changed. On = System configuration is locked.
3	Reserved	Reserved
4	Reserved	Reserved

Position	Description	Function
5	Password protection override	Off = Password is enabled. On = Password is disabled.
6	Configuration validation	Off = Switch has no function. On = Setting clears CMOS and NVRAM.
7	Reserved	Reserved
8	Reserved	Reserved

When the system maintenance switch position 6 is set to the On position, the system is prepared to erase all system configuration settings from both CMOS and NVRAM.

> △ **CAUTION:** Clearing CMOS and/or NVRAM deletes configuration information. Be sure to properly configure the server or data loss could occur.

See the *HP ProLiant DL585 Generation 5 Server Maintenance and Service Guide* on the Documentation CD for more information.

Media board components

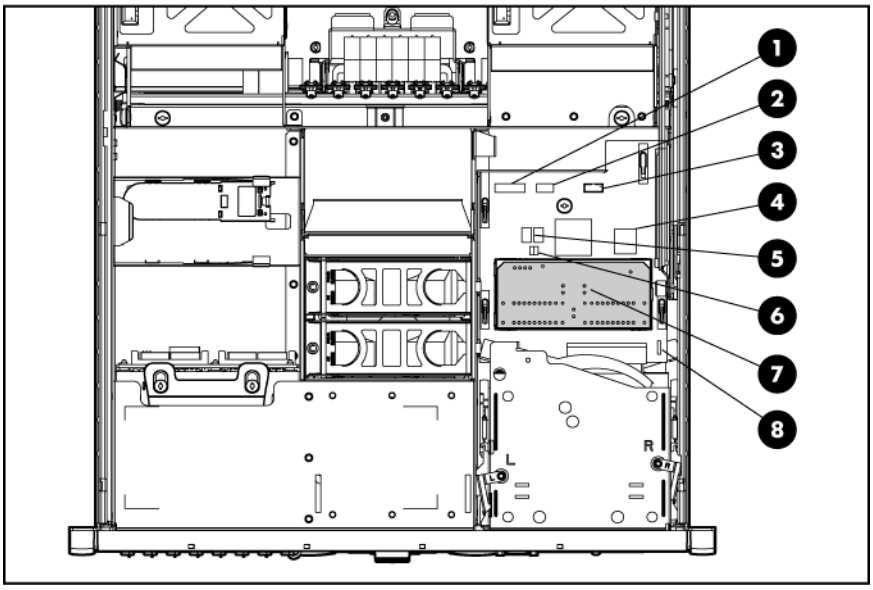

Item	Description
1	Power button cable connector
2	USB cable connector
3	Video cable connector
4	Internal USB connector
5	Port 84/85 code display
6	Port 84/85 code display switch
7	System Insight Display
8	Boot device selector switch (SW1)

Boot device selector switch (SW1)

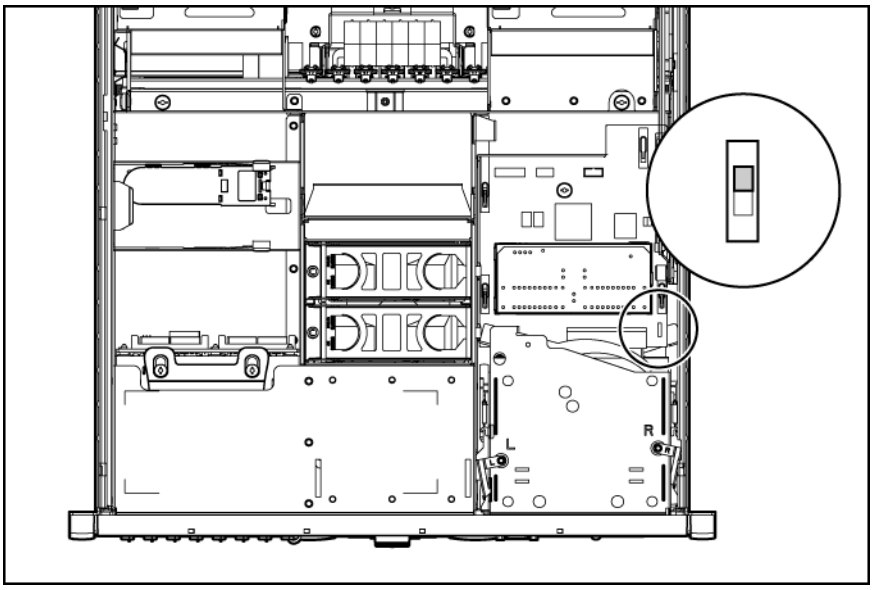

The boot device selector switch setting determines the device access order of the media drives in the server. The default setting for the boot device selector switch is FLP TOP.

When the boot device selector switch is set to FLP TOP, the optical drive in the bottom bay is designated as the primary optical drive. The diskette drive in the top bay is bootable. The server cannot boot from a diskette drive in the bottom bay when the boot device selector switch is set to FLP TOP.

When the boot device selector switch is set to FLP BOT, the optical drive in the top bay is designated as the primary optical drive. The diskette drive in the bottom bay is bootable. The server cannot boot from a diskette drive in the top bay when the boot device selector switch is set to FLP BOT.

Switch setting	Description
FLP TOP (default)	The diskette drive in top bay is bootable. The primary optical drive in bottom bay is bootable.
FLP BOT	The primary optical drive in top bay is bootable. The diskette drive in bottom bay is bootable.

Systems Insight Display LEDs

The front panel health LEDs indicate only the current hardware status. In some situations, HP SIM might report server status differently than the health LEDs because the software tracks more system attributes. The System Insight Display LEDs identify components experiencing an error, event, or failure.

The Systems Insight Display LEDs are located on the media board. In normal operations, all of the LEDs are off unless one of the components fails.

IMPORTANT: When removing the access panel to view the Systems Insight Display LEDs (on page 16), leave the server powered on. The Systems Insight Display LEDs are cleared when the server is powered off.

NOTE: The system management driver must be installed for the internal system health LED to provide pre-failure and warranty conditions.

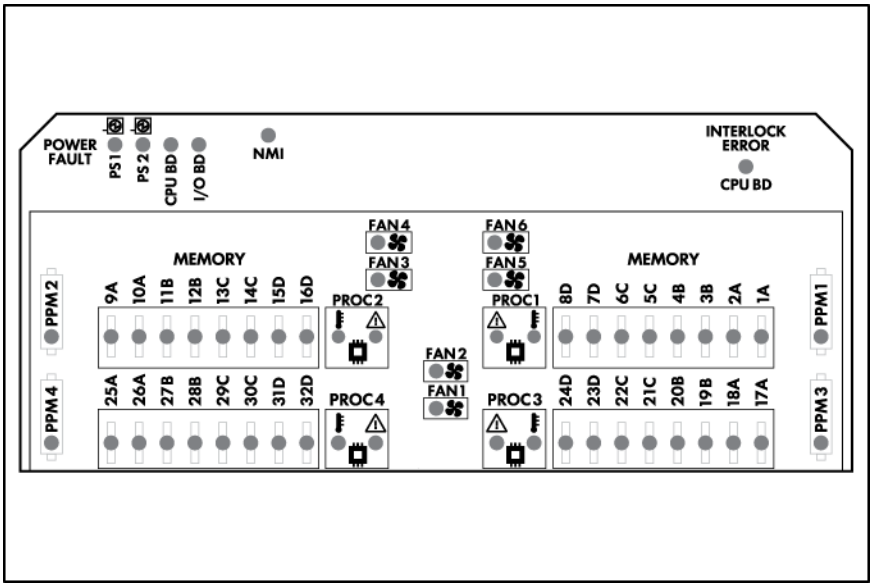

LED	Component
PS1	Power supply (primary)
PS2	Power supply (optional)
CPU BD (Power Fault)	Processor memory module board
I/O BD	System board
NMI	System NMI switch
SLOT X	Expansion slot
CPU BD (Interlock Error)	System board
PPM X	Processor power module
1A–32D	DIMM slot
PROC X	Processor
FAN X	Fan

See the *HP ProLiant DL585 Generation 5 Server Maintenance and Service Guide* on the Documentation CD for more information.

Battery pack LEDs

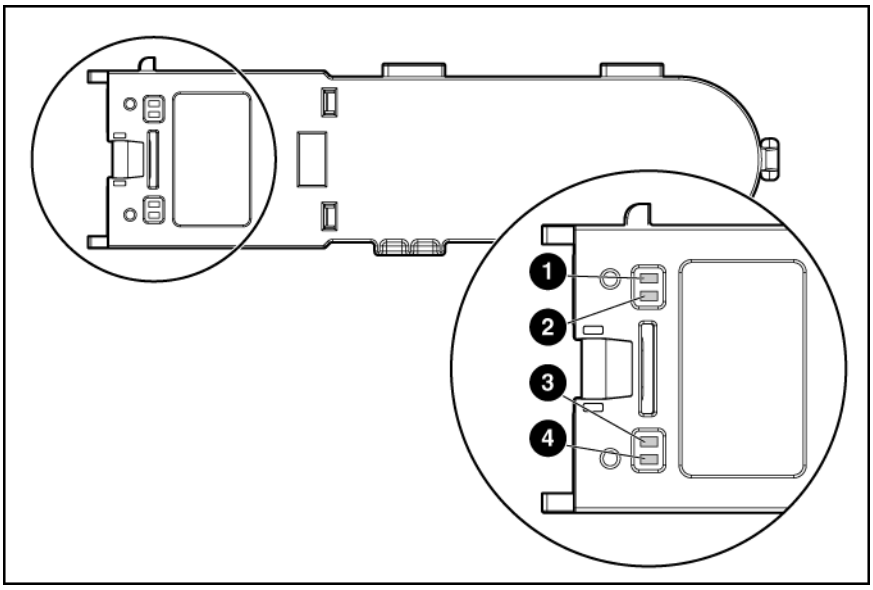

Item ID	Color	Description
1	Green	System Power LED. This LED glows steadily when the system is powered up and 12 V system power is available. This power supply is used to maintain the battery charge and provide supplementary power to the cache microcontroller.
2	Green	Auxiliary Power LED. This LED glows steadily when 3.3V auxiliary voltage is detected. The auxiliary voltage is used to preserve BBWC data and is available any time that the system power cords are connected to a power supply.
3	Amber	Battery Health LED. To interpret the illumination patterns of this LED, see the following table.
4	Green	BBWC Status LED. To interpret the illumination patterns of this LED, see the following table.

LED3 pattern	LED4 pattern	Interpretation
—	One blink every two seconds	The system is powered down, and the cache contains data that has not yet been written to the drives. Restore system power as soon as possible to prevent data loss. Data preservation time is extended any time that 3.3 V auxiliary power is available, as indicated by LED 2. In the absence of auxiliary power, battery power alone preserves the data. A fully-charged battery can normally preserve data for at least two days. The battery lifetime also depends on the cache module size. For further information, refer to the controller QuickSpecs on the HP website (http://www.hp.com).
—	Double blink, then pause	The cache microcontroller is waiting for the host controller to communicate.
—	One blink per second	The battery pack is below the minimum charge level and is being charged. Features that require a battery (such as write cache,

LED3 pattern	LED4 pattern	Interpretation
		capacity expansion, stripe size migration, and RAID migration) are temporarily unavailable until charging is complete. The recharge process takes between 15 minutes and two hours, depending on the initial capacity of the battery.
—	Steady glow	The battery pack is fully charged, and posted write data is stored in the cache.
—	Off	The battery pack is fully charged, and there is no posted write data in the cache.
One blink per second	One blink per second	An alternating green and amber blink pattern indicates that the cache microcontroller is executing from within its boot loader and receiving new flash code from the host controller.
Steady glow	—	There is a short circuit across the battery terminals or within the battery pack. BBWC features are disabled until the battery pack is replaced. The life expectancy of a battery pack is typically more than three years.
One blink per second	—	There is an open circuit across the battery terminals or within the battery pack. BBWC features are disabled until the battery pack is replaced. The life expectancy of a battery pack is typically more than three years.

Fan locations

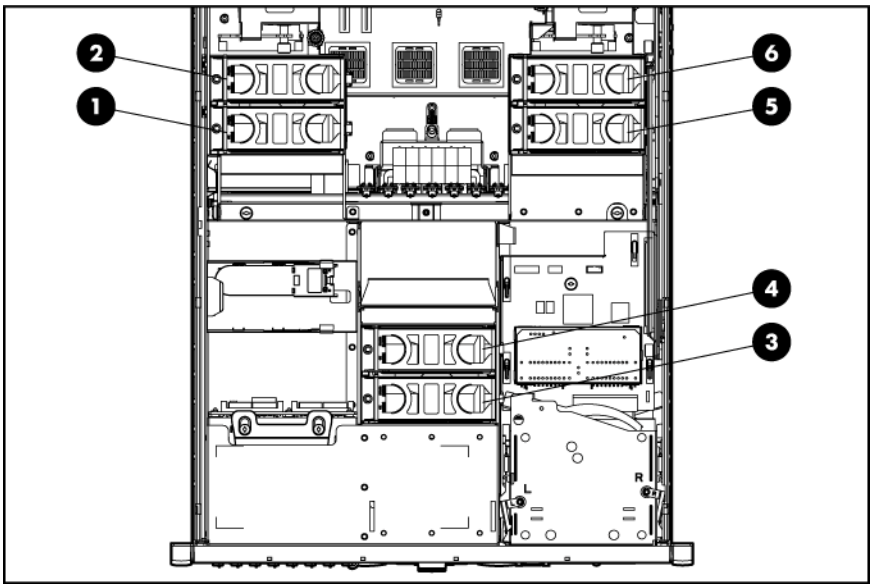

Item	Description
1	Fan 3
2	Fan 4
3	Fan 1
4	Fan 2
5	Fan 5
6	Fan 6

See "Hot-plug fans (on page 29)" for replacement procedures and operation guidelines.

Hot-plug fan LEDs

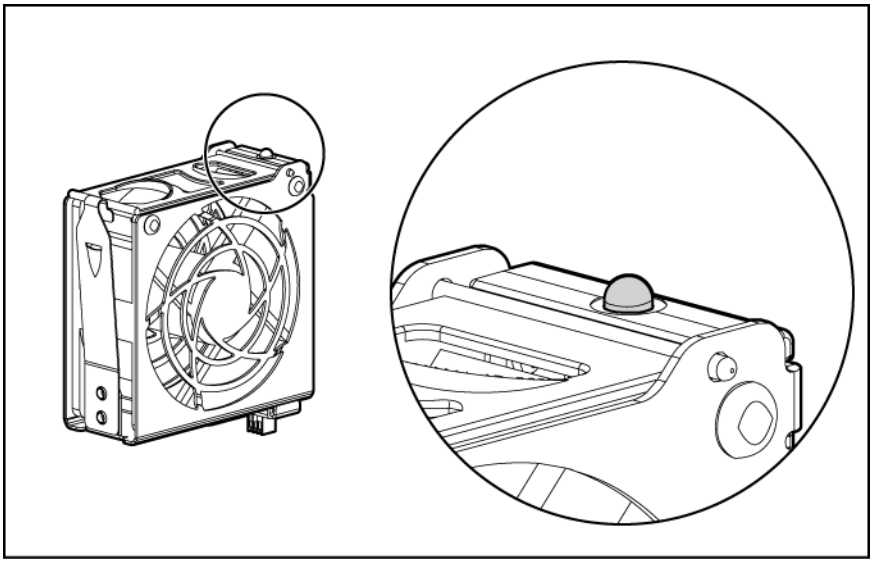

Status
Green = Operating normally
Amber = Failed
Off = No power

Setup

Optional installation services

Delivered by experienced, certified engineers, HP Care Pack services help you keep your servers up and running with support packages tailored specifically for HP ProLiant systems. HP Care Packs let you integrate both hardware and software support into a single package. A number of service level options are available to meet your needs.

HP Care Pack Services offer upgraded service levels to expand your standard product warranty with easy-to-buy, easy-to-use support packages that help you make the most of your server investments. Some of the Care Pack services are:

- Hardware support
  - 6-Hour Call-to-Repair
  - 4-Hour 24x7 Same Day
  - 4-Hour Same Business Day
- Software support
  - Microsoft®
  - Linux
  - HP ProLiant Essentials (HP SIM and RDP)
  - VMWare
- Integrated hardware and software support
  - Critical Service
  - Proactive 24
  - Support Plus
  - Support Plus 24
- Startup and implementation services for both hardware and software

For more information on Care Packs, refer to the HP website (http://www.hp.com/hps/carepack/servers/cp_proliant.html).

Rack planning resources

The rack resource kit ships with all HP branded or Compaq branded 9000, 10000, and H9 series racks. For more information on the content of each resource, refer to the rack resource kit documentation.

If you intend to deploy and configure multiple servers in a single rack, refer to the white paper on high-density deployment at the HP website (http://www.hp.com/products/servers/platforms).

Optimum environment

When installing the server, select a location that meets the environmental standards described in this section.

Space and airflow requirements

To allow for servicing and adequate airflow, observe the following space and airflow requirements when deciding where to install a rack:

- Leave a minimum clearance of 63.5 cm (25 in) in front of the rack.
- Leave a minimum clearance of 76.2 cm (30 in) behind the rack.
- Leave a minimum clearance of 121.9 cm (48 in) from the back of the rack to the back of another rack or row of racks.

HP servers draw in cool air through the front door and expel warm air through the rear door. Therefore, the front and rear rack doors must be adequately ventilated to allow ambient room air to enter the cabinet, and the rear door must be adequately ventilated to allow the warm air to escape from the cabinet.

CAUTION: To prevent improper cooling and damage to the equipment, do not block the ventilation openings.

When vertical space in the rack is not filled by a server or rack component, the gaps between the components cause changes in airflow through the rack and across the servers. Cover all gaps with blanking panels to maintain proper airflow.

CAUTION: Always use blanking panels to fill empty vertical spaces in the rack. This arrangement ensures proper airflow. Using a rack without blanking panels results in improper cooling that can lead to thermal damage.

The 9000 and 10000 Series Racks provide proper server cooling from flow-through perforations in the front and rear doors that provide 64 percent open area for ventilation.

CAUTION: When using a Compaq branded 7000 Series rack, you must install the high airflow rack door insert [P/N 327281-B21 (42U) or P/N 157847-B21 (22U)] to provide proper front-to-back airflow and cooling.

CAUTION: If a third-party rack is used, observe the following additional requirements to ensure adequate airflow and to prevent damage to the equipment:

- Front and rear doors—If the 42U rack includes closing front and rear doors, you must allow 5,350 sq cm (830 sq in) of holes evenly distributed from top to bottom to permit adequate airflow (equivalent to the required 64 percent open area for ventilation).
- Side—The clearance between the installed rack component and the side panels of the rack must be a minimum of 7 cm (2.75 in).

Temperature requirements

To ensure continued safe and reliable equipment operation, install or position the system in a well-ventilated, climate-controlled environment.

The maximum recommended ambient operating temperature (TMRA) for most server products is 35°C (95°F). The temperature in the room where the rack is located must not exceed 35°C (95°F).

CAUTION: To reduce the risk of damage to the equipment when installing third-party options:

- Do not permit optional equipment to impede airflow around the server or to increase the internal rack temperature beyond the maximum allowable limits.
- Do not exceed the manufacturer's TMRA.

Power requirements

Installation of this equipment must comply with local and regional electrical regulations governing the installation of information technology equipment by licensed electricians. This equipment is designed to operate in installations covered by NFPA 70, 1999 Edition (National Electric Code) and NFPA-75, 1992 (code for Protection of Electronic Computer/Data Processing Equipment). For electrical power ratings on options, refer to the product rating label or the user documentation supplied with that option.

WARNING: To reduce the risk of personal injury, fire, or damage to the equipment, do not overload the AC supply branch circuit that provides power to the rack. Consult the electrical authority having jurisdiction over wiring and installation requirements of your facility.

CAUTION: Protect the server from power fluctuations and temporary interruptions with a regulating uninterruptible power supply (UPS). This device protects the hardware from damage caused by power surges and voltage spikes and keeps the system in operation during a power failure.

When installing more than one server, you may need to use additional power distribution devices to safely provide power to all devices. Observe the following guidelines:

- Balance the server power load between available AC supply branch circuits.
- Do not allow the overall system AC current load to exceed 80 percent of the branch circuit AC current rating.
- Do not use common power outlet strips for this equipment.
- Provide a separate electrical circuit for the server.

Rack warnings and cautions

WARNING: To reduce the risk of personal injury or damage to the equipment, be sure that:

- The leveling jacks are extended to the floor.
- The full weight of the rack rests on the leveling jacks.
- The stabilizing feet are attached to the rack if it is a single-rack installation.
- The racks are coupled together in multiple-rack installations.
- Only one component is extended at a time. A rack may become unstable if more than one component is extended for any reason.

WARNING: To reduce the risk of personal injury or equipment damage when unloading a rack:

- At least two people are needed to safely unload the rack from the pallet. An empty 42U rack can weigh as much as 115 kg (253 lb), can stand more than 2.1 m (7 ft) tall, and

may become unstable when being moved on its casters.

- Never stand in front of the rack when it is rolling down the ramp from the pallet. Always handle the rack from both sides.

⚠ **WARNING:** When installing a server in a telco rack, be sure that the rack frame is adequately secured to the top and bottom of the building structure.

⚠ **WARNING:** This server is very heavy. To reduce the risk of personal injury or damage to the equipment:

- Observe local occupational health and safety requirements and guidelines for manual material handling.
- Get help to lift and stabilize the product during installation or removal, especially when the product is not fastened to the rails. When the server weighs more than 22.5 kg (50 lb), at least two people must lift the server into the rack together. A third person may be required to help align the server if the server is installed higher than chest level.
- Use caution when installing the server in or removing the server from the rack; it is unstable when not fastened to the rails.

⚠ **WARNING:** To reduce the risk of personal injury from hot surfaces, allow the drives and the internal system components to cool before touching them.

⚠ **WARNING:** To reduce the risk of personal injury, electric shock, or damage to the equipment, remove the power cord to remove power from the server. The front panel Power On/Standby button does not completely shut off system power. Portions of the power supply and some internal circuitry remain active until AC power is removed.

⚠ **CAUTION:** Protect the server from power fluctuations and temporary interruptions with a regulating uninterruptible power supply (UPS). This device protects the hardware from damage caused by power surges and voltage spikes and keeps the system in operation during a power failure.

⚠ **CAUTION:** Do not operate the server for long periods with the access panel open or removed. Operating the server in this manner results in improper airflow and improper cooling that can lead to thermal damage.

Electrical grounding requirements

The server must be grounded properly for proper operation and safety. In the United States, you must install the equipment in accordance with NFPA 70, 1999 Edition (National Electric Code), Article 250, as well as any local and regional building codes. In Canada, you must install the equipment in accordance with Canadian Standards Association, CSA C22.1, Canadian Electrical Code. In all other countries, you must install the equipment in accordance with any regional or national electrical wiring codes, such as the International Electrotechnical Commission (IEC) Code 364, parts 1 through 7. Furthermore, you must be sure that all power distribution devices used in the installation, such as branch wiring and receptacles, are listed or certified grounding-type devices.

Because of the high ground-leakage currents associated with multiple servers connected to the same power source, HP recommends the use of a PDU that is either permanently wired to the building's branch circuit or includes a nondetachable cord that is wired to an industrial-style plug. NEMA locking-style plugs

or those complying with IEC 60309 are considered suitable for this purpose. Using common power outlet strips for the server is not recommended.

Identifying rack server shipping carton contents

Unpack the server shipping carton and locate the materials and documentation necessary for installing the server. All the rack mounting hardware necessary for installing the server into the rack is included with the rack or the server.

The contents of the server shipping carton include:

- Server
- Power cord
- Hardware documentation, Documentation CD, and software products
- Rack-mounting hardware

In addition to the supplied items, you may need:

- Hardware options
- Operating system or application software
- PDU

Installing hardware options

Install any hardware options before initializing the server. For options installation information, refer to the option documentation. For server-specific information, refer to "Hardware options installation (on page 32)."

Installing the server into the rack

Refer to the installation instructions that ship with the rack kit to install the server into the rack.

Installing the cable management arm

Refer to the installation instructions that ship with the rack kit to install the cable management arm.

Powering up and configuring the server

To power up the server, press the Power On/Standby button.

During the initial boot, the server configuration automatically defaults to prepare for operating system installation.

To modify the server default settings, press the **F9** key when prompted during the boot process to enter RBSU. By default, RBSU runs in the English language.

NOTE: If an HP array controller has been added or is embedded in the system, the array controller will default to a RAID configuration based on the size and number of hard drives installed. Press the **F8** key when prompted during the array controller initialization to use the

ORCA utility to modify the controller default settings.

For more information on the automatic configuration, see the *HP ROM-Based Setup Utility User Guide* on the Documentation CD.

Installing the operating system

To operate properly, the server must have a supported operating system. For the latest information on operating system support, see the HP website (http://www.hp.com/go/supportos).

Three methods are available to install an operating system on the server:

- SmartStart assisted installation—Insert the SmartStart CD into an external USB CD-ROM drive, and then reboot the server.
- Manual installation—Insert the operating system CD into an external USB CD-ROM drive, and then reboot the server. This process might require you to obtain additional drivers from the HP website (http://www.hp.com/support).
- Remote deployment installation—The operating system can be remotely deployed using the Rapid Deployment Pack (RDP) or PXE boot over an Ethernet connection.

Follow the on-screen instructions to begin the installation process.

For information on using these installation methods, see the SmartStart installation poster in the HP ProLiant Essentials Foundation Pack, included with the server.

Registering the server

To register the server, refer to the HP Registration website (http://register.hp.com).

Operations

Power up the server

To power up the server, press the Power On/Standby button.

Power down the server

WARNING: To reduce the risk of personal injury, electric shock, or damage to the equipment, remove the power cord to remove power from the server. The front panel Power On/Standby button does not completely shut off system power. Portions of the power supply and some internal circuitry remain active until AC power is removed.

IMPORTANT: If installing a hot-plug device, it is not necessary to power down the server.

1. Shut down the OS as directed by the OS documentation.
2. Press the Power On/Standby button to place the server in standby mode. When the server enters standby power mode, the system power LED changes to amber.
3. Disconnect the power cords.

The system is now without power.

Extending the server from the rack

The design of the server enables you to access several components through the front of the server. Installing or accessing the following components will not require extending the server from the rack:

- Processors
- PPMs
- Processor memory board
- DIMMs
- DVD drive
- Optional diskette or CD-ROM drive
- Hard drives

To extend the server from the rack:

1. Pull down the quick-release levers on each side of the server to release the server from the rack.
2. Extend the server on the rack rails until the server rail-release latches engage.

NOTE: The release latches will lock into place when the rails are fully extended.

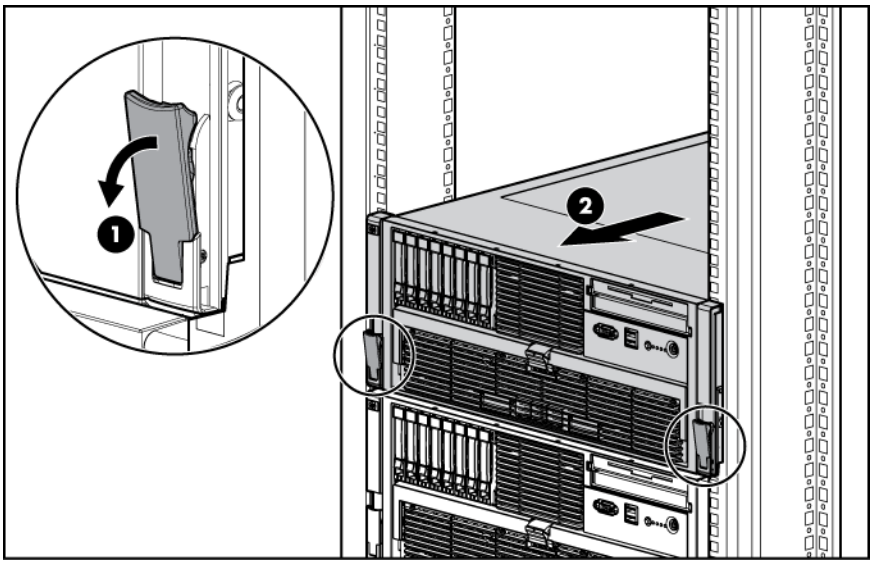

WARNING: To reduce the risk of personal injury or equipment damage, be sure that the rack is adequately stabilized before extending a component from the rack.

WARNING: To reduce the risk of personal injury, be careful when pressing the server rail-release latches and sliding the server into the rack. The sliding rails could pinch your fingers.

3. After performing the installation or maintenance procedure, slide the server into the rack by pressing the server rail-release latches.

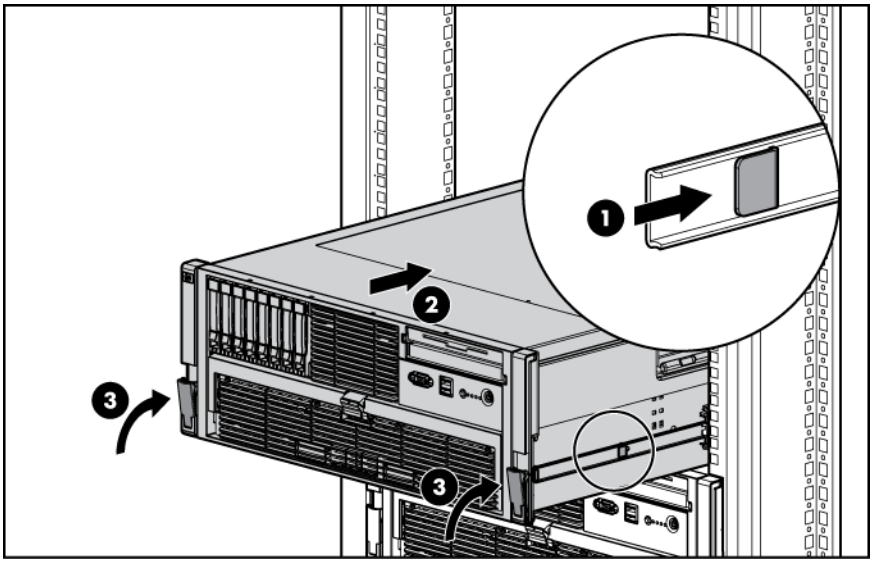

Removing the access panel

WARNING: To reduce the risk of personal injury from hot surfaces, allow the drives and the internal system components to cool before touching them.

CAUTION: Do not operate the server for long periods with the access panel open or removed. Operating the server in this manner results in improper airflow and improper cooling that can lead to thermal damage.

IMPORTANT: When removing the access panel to view the Systems Insight Display LEDs (on page 16), leave the server powered on. The Systems Insight Display LEDs are cleared when the server is powered off.

1. Extend the server from the rack ("Extending the server from the rack" on page 27).
2. If the locking latch is locked, use a T-15 Torx screwdriver to unlock the latch.

   NOTE: The T-15 Torx screwdriver is shipped with the server and can be located on the rear panel ("Rear panel components" on page 11).

3. Lift up on the hood latch, and remove the access panel.

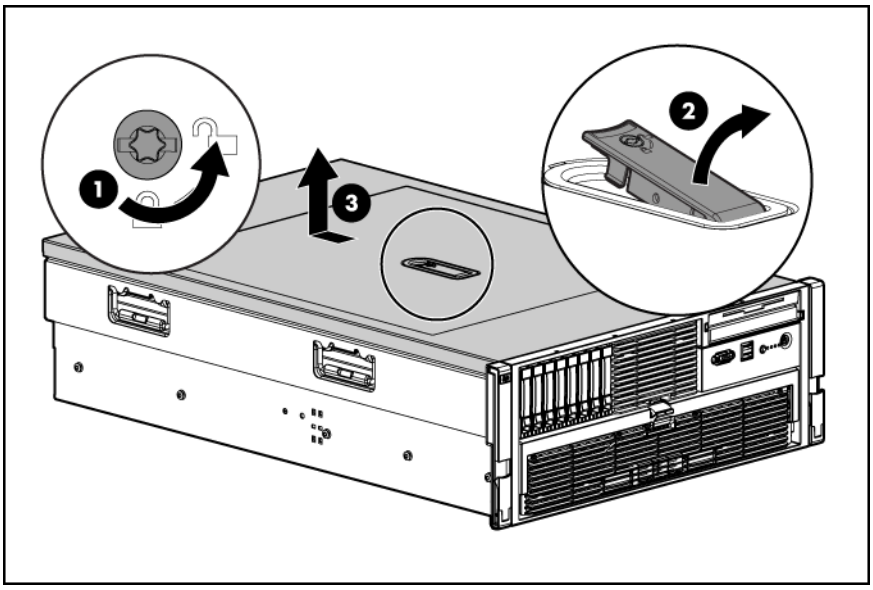

4. After installing hardware options, replace the access panel. Be sure that the panel is securely locked into place before powering up the server.

Accessing the Systems Insight Display

IMPORTANT: When removing the access panel to view the Systems Insight Display LEDs (on page 16), leave the server powered on. The Systems Insight Display LEDs are cleared when the server is powered off.

1. Extend the server from the rack ("Extending the server from the rack" on page 27).
2. Remove the access panel ("Removing the access panel" on page 28).
3. Locate the Systems Insight Display ("Media board components" on page 15).

Hot-plug fans

The server supports redundant hot-plug fans ("Fan locations" on page 19) in a 5+1 configuration to provide proper airflow to the server.

WARNING: To prevent personal injury from hazardous energy:

- Remove watches, rings, or other metal objects.
- Use tools with insulated handles.

- Do not place tools or metal parts on top of batteries.

To replace a hot-plug fan:

1. Extend the server from the rack ("Extending the server from the rack" on page 27).
2. Remove the access panel ("Removing the access panel" on page 28).
3. Identify the failed fan by locating an amber LED on top of the failed fan ("Hot-plug fan LEDs" on page 20) or on the Systems Insight Display ("Systems Insight Display LEDs" on page 16).
4. Remove the malfunctioning hot-plug fan from the server.

IMPORTANT: Remove and replace one fan at a time. If the system detects two fan failures, the server shuts down to avoid thermal damage.

5. Install a new hot-plug fan.

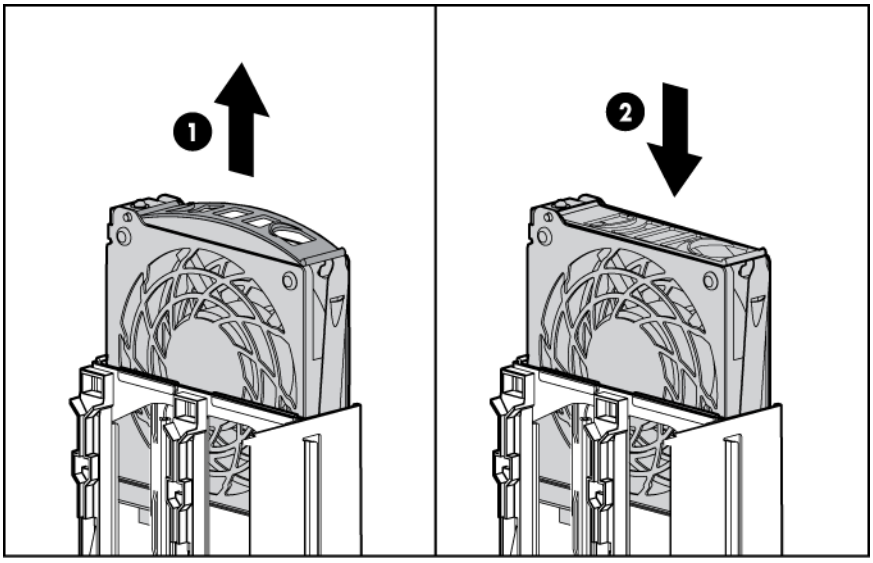

6. Observe the LED on each installed fan to be sure it is illuminated green ("Hot-plug fan LEDs" on page 20).

NOTE: If the front panel internal system health LED is not green after you install hot-plug fans, reseat the hot-plug fan or refer to the troubleshooting section.

7. Replace the access panel ("Removing the access panel" on page 28).
8. Slide the server into the rack.

Removing the system battery

If the server no longer automatically displays the correct date and time, you may need to replace the battery that provides power to the real-time clock. Under normal use, battery life is 5 to 10 years.

WARNING: The computer contains an internal lithium manganese dioxide, a vanadium pentoxide, or an alkaline battery pack. A risk of fire and burns exists if the battery pack is not properly handled. To reduce the risk of personal injury:

- Do not attempt to recharge the battery.
- Do not expose the battery to temperatures higher than 60°C (140°F).

- Do not disassemble, crush, puncture, short external contacts, or dispose of in fire or water.
- Replace only with the spare designated for this product.

To remove the battery:

1. Power down the server (on page 27).
2. Extend or remove the server from the rack ("Extending the server from the rack" on page 27).
3. Remove the access panel ("Removing the access panel" on page 28).
4. Locate the battery ("Internal components" on page 13). It might be necessary to remove expansion boards (on page 46) from and around slot 9 to access the battery.
5. Remove the battery.

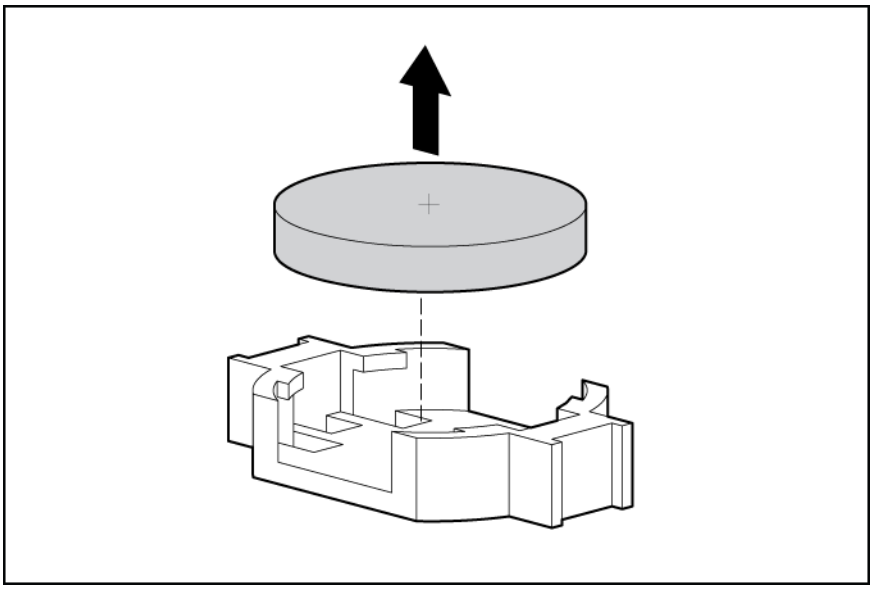

To replace the component, reverse the removal procedure.

Run the RBSU to configure the server after replacing the battery. See the *HP ROM-Based Setup Utility User Guide* on the Documentation CD for more detailed information.

Hardware options installation

Introduction

If more than one option is being installed, read the installation instructions for all the hardware options and identify similar steps to streamline the installation process.

WARNING: To reduce the risk of personal injury from hot surfaces, allow the drives and the internal system components to cool before touching them.

CAUTION: To prevent damage to electrical components, properly ground the server before beginning any installation procedure. Improper grounding can cause electrostatic discharge.

Review "Electrostatic Discharge (on page 87)" before installing hardware options into the server.

Processor options

The server supports operation in a two- or four-processor configuration. The server supports boot functions through the processor installed in processor socket 2.

Server PPMs provide the proper power to each processor. Each PPM must be installed in the slot adjacent to its processor.

Removing the processor memory module

The processors and memory are stored in a module at the front of the server. Access to the processor memory module is provided through the front panel, eliminating the need to extend the server from the rack to install new or replace existing processors or upgrade the memory.

To remove the processor memory module:

1. Power down the server (on page 27).
2. Release the latches on the lever.

3. Lower the handle, and pull the processor memory module out of the server until the release latches catch.

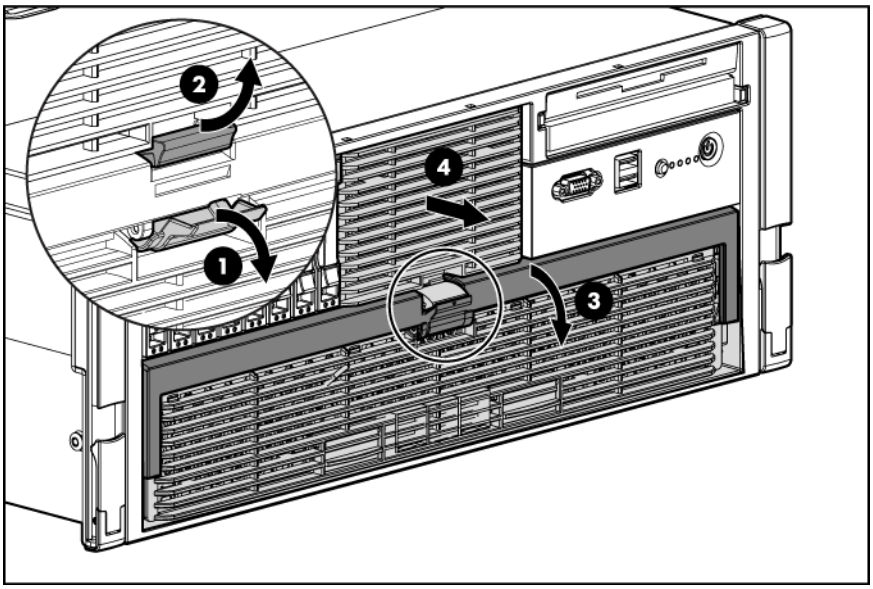

⚠ **WARNING:** Use caution when installing the processor memory module or removing the processor memory module; when fully populated, it can weigh up to 13.6 kg (30 lb).

4. Firmly holding the processor memory module, press the release buttons and pull the module out of the server.

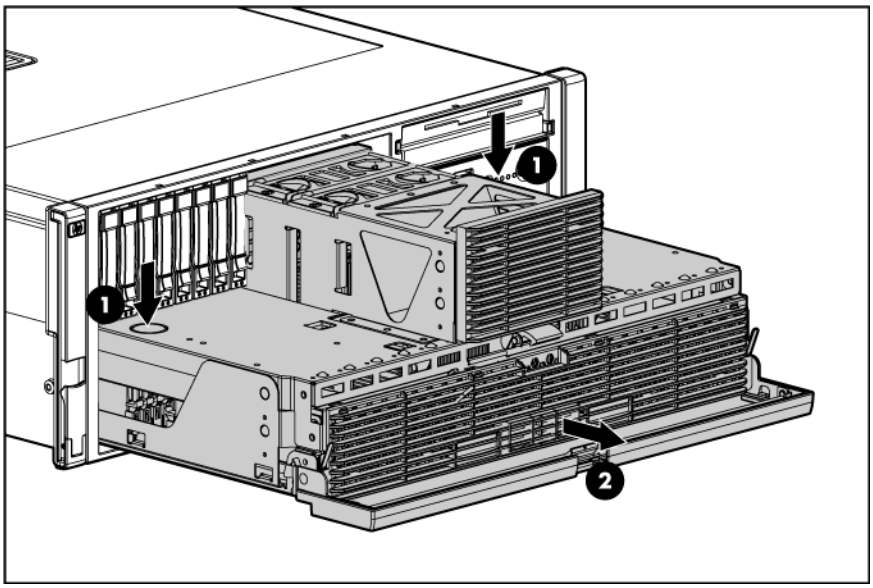

5. Remove the fans installed in the cover of the processor memory module.

6. Release the latch, and open the cover.

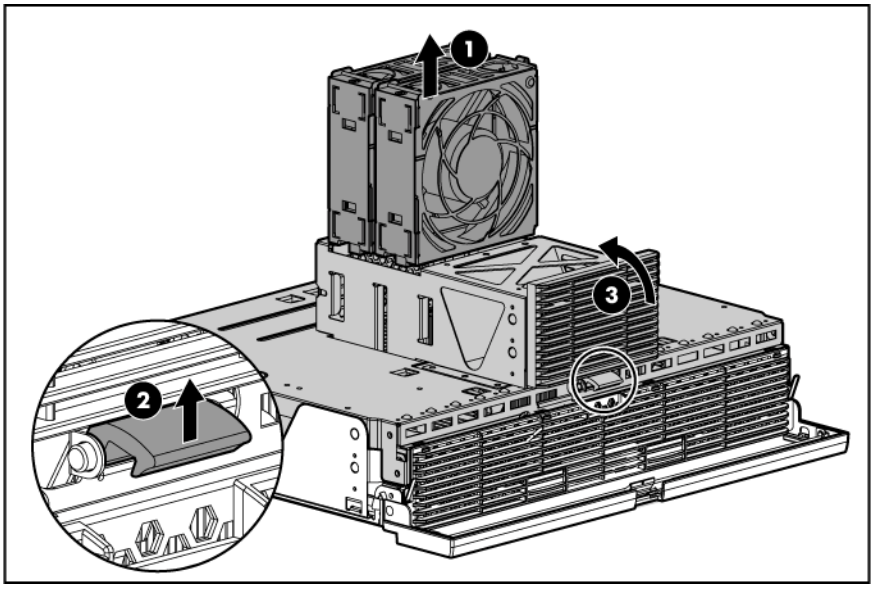

Installing a processor

CAUTION: To avoid damage to the processor and system board, only authorized personnel should attempt to replace or install the processor in this server.

CAUTION: To prevent possible server malfunction and damage to the equipment, multiprocessor configurations must contain processors with the same part number.

CAUTION: Processor and PPM sockets 1 and 2 must be populated at all times or the server will not function properly.

CAUTION: To help avoid damage to the processor and system board, do not install the processor without using the processor installation tool.

To install a processor:

1. Locate and download the latest ROM version from the HP website (http://www.hp.com/support). Follow the instructions on the website to update the system ROM.
2. Power down the server (on page 27).

WARNING: Use caution when installing the processor memory module or removing the processor memory module; when fully populated, it can weigh up to 13.6 kg (30 lb).

3. Remove the processor memory module, and open the cover ("Removing the processor memory module" on page 32).

WARNING: To reduce the risk of personal injury from hot surfaces, allow the heatsink to cool before touching it.

4. Open the heatsink retaining bracket.

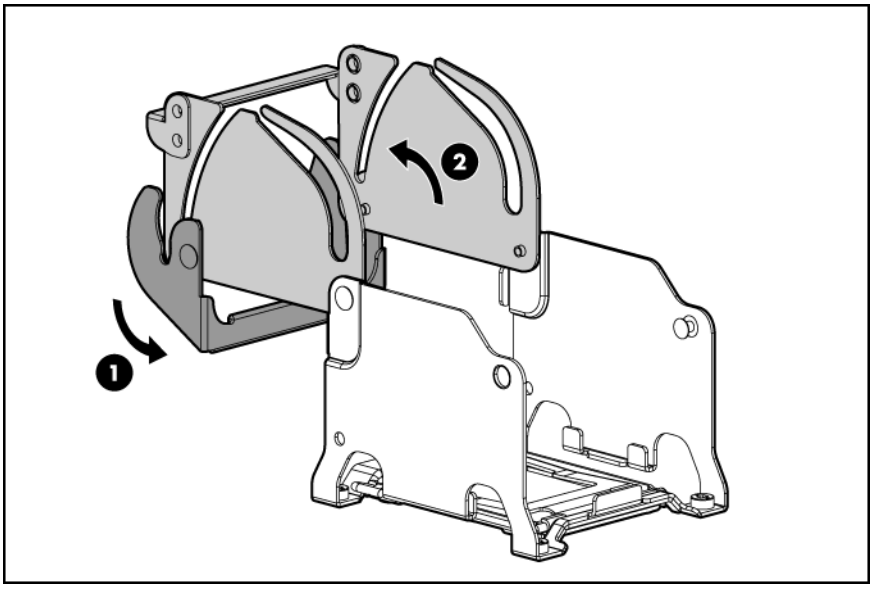

△ **CAUTION:** The pins on the processor socket are very fragile. Any damage to them may require replacing the system board.

5. Remove the processor socket protective cover. Retain the cover for future use.

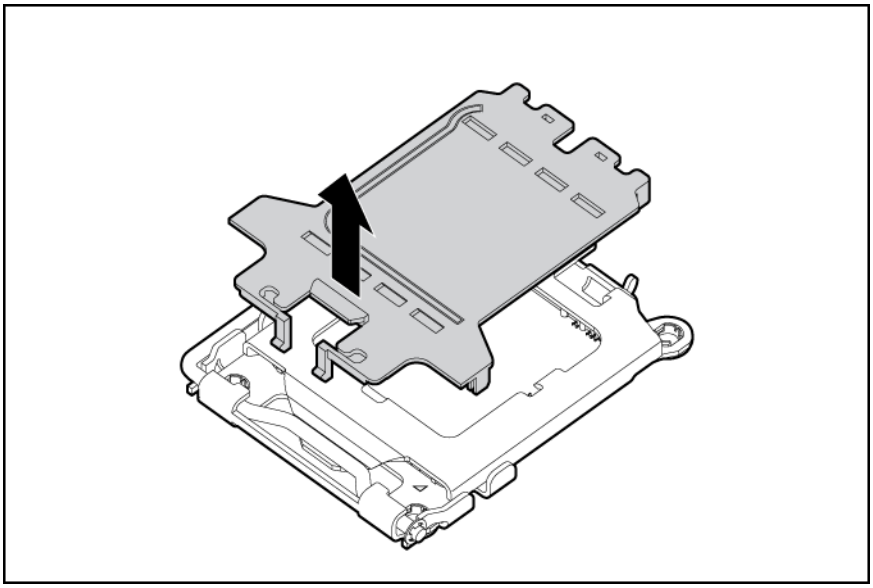

△ **CAUTION:** Failure to completely open the processor locking lever prevents the processor from seating during installation, leading to hardware damage.

6. Rotate the latch and open the retaining bracket.

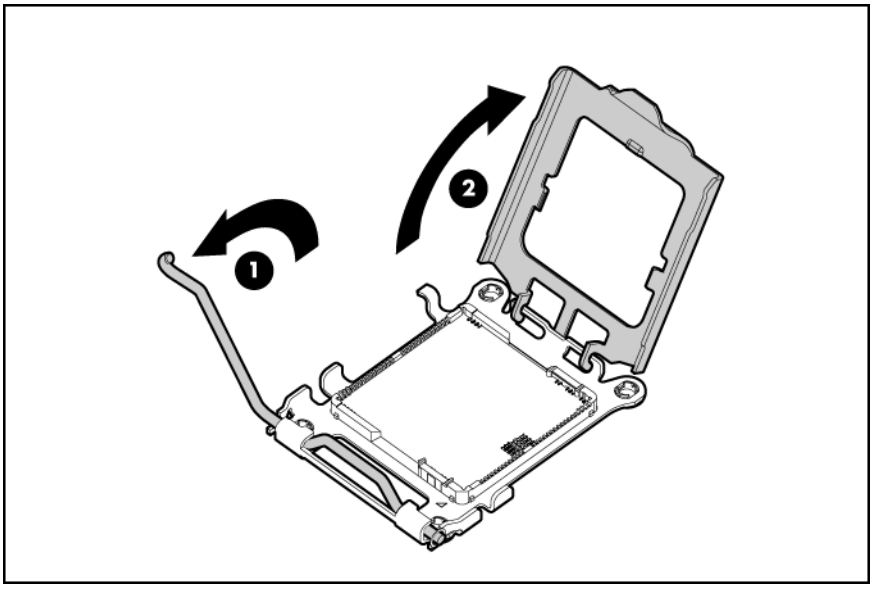

IMPORTANT: Be sure the processor remains inside the processor installation tool.

7. If the processor has separated from the installation tool, carefully re-insert the processor in the tool.

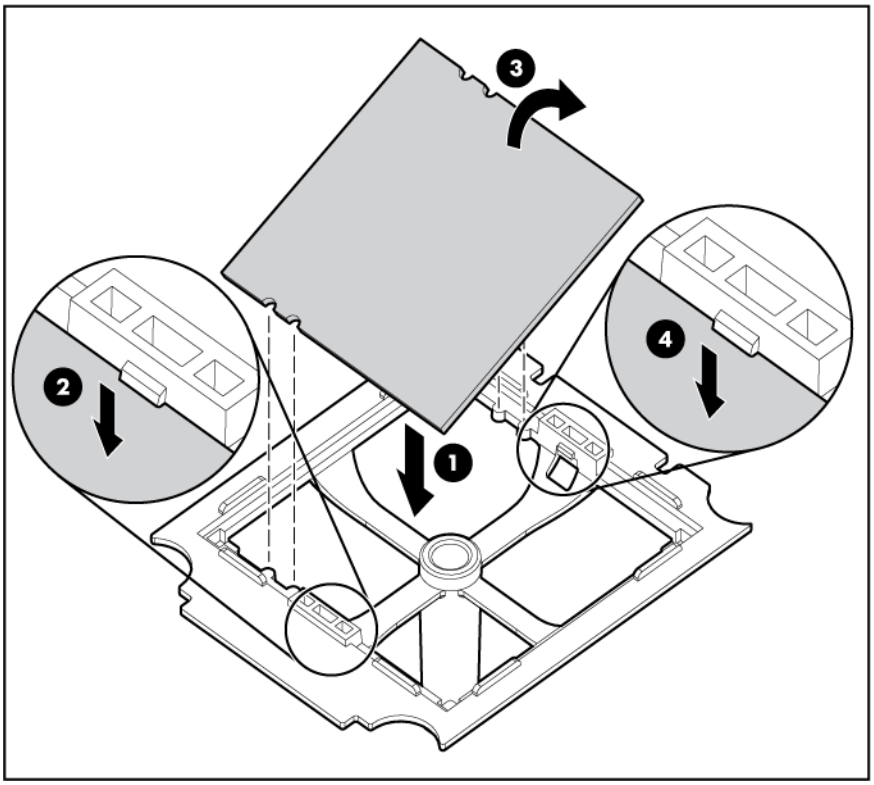

8. Align the processor installation tool with the socket and install the processor.

CAUTION: The processor is designed to fit one way into the socket. Use the alignment guides on the processor and socket to properly align the processor with the socket.

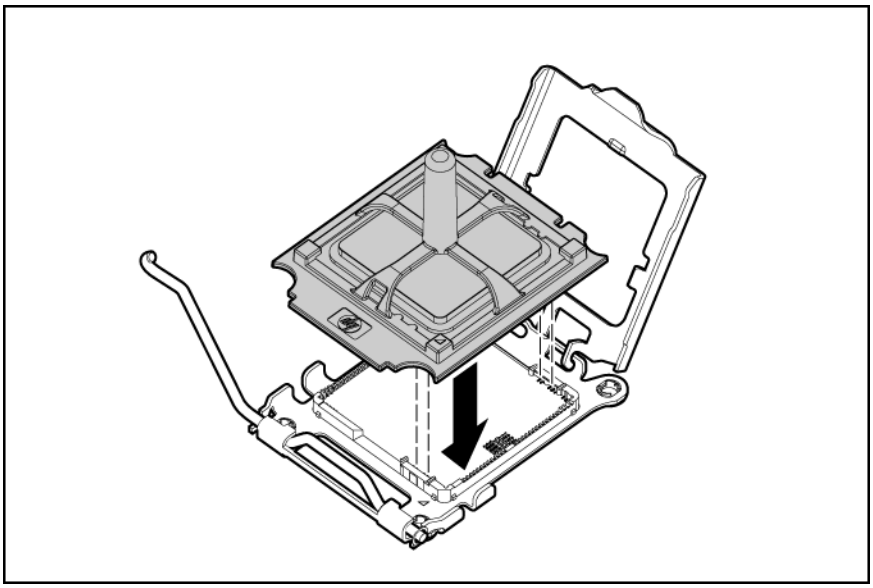

9. Press down firmly until the processor installation tool clicks and separates from the processor, and then remove the processor installation tool.

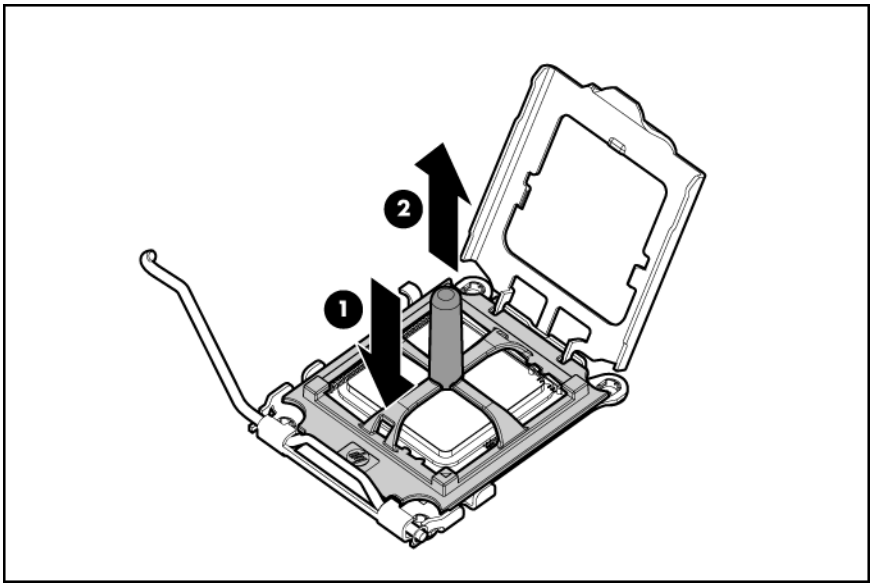

10. Close the processor retaining bracket and the processor retaining latch.

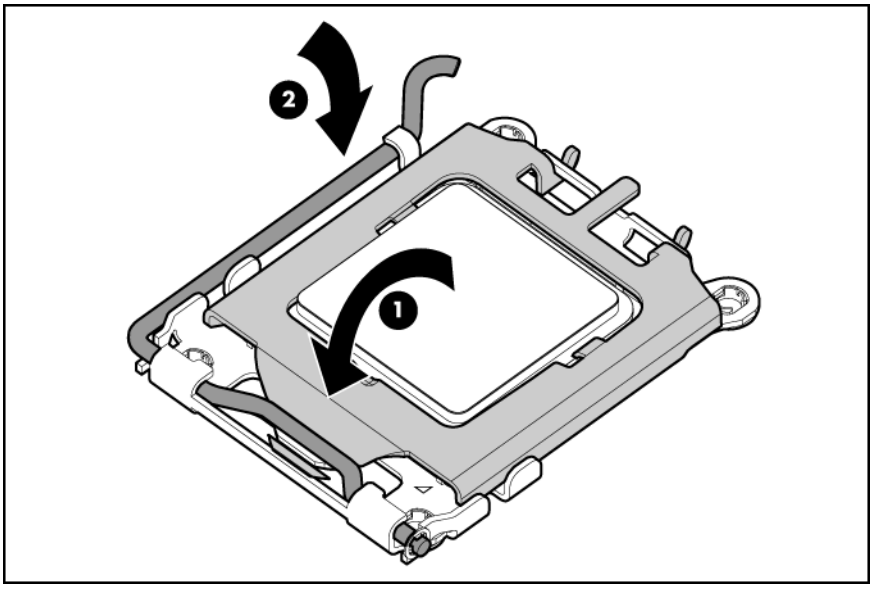

11. Remove the heatsink cover.

△ **CAUTION:** After the cover is removed, do not touch the thermal interface media.

12. Install the heatsink.

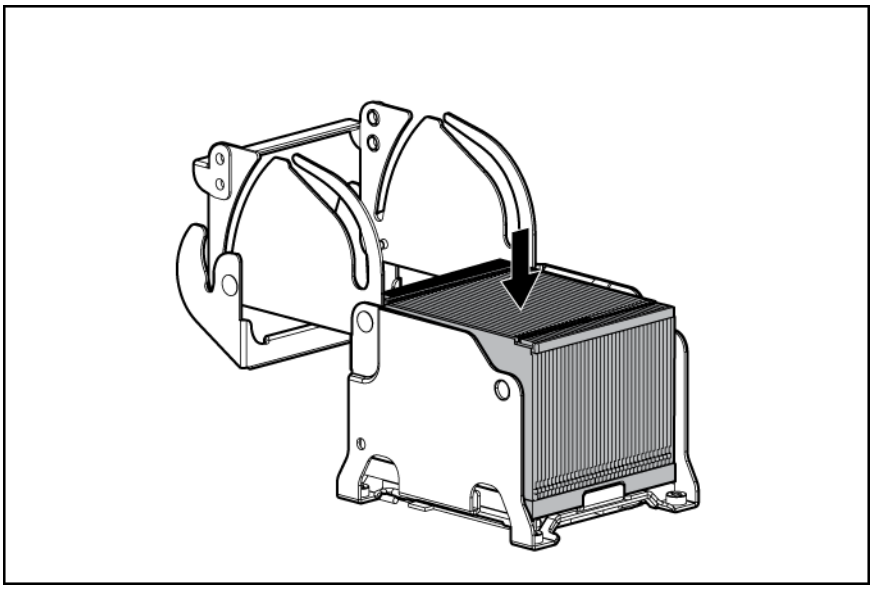

13. Close the heatsink retaining bracket.

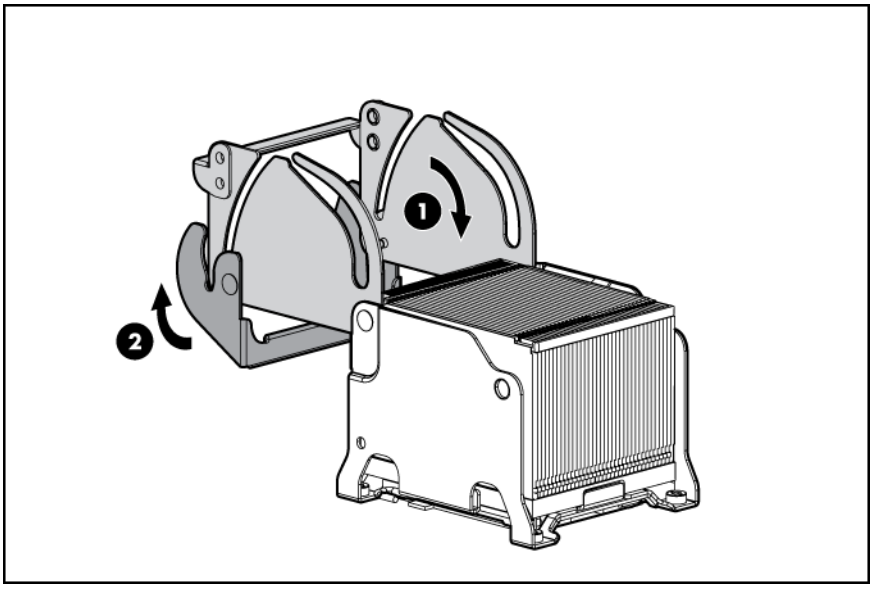

14. Install the PPM.

IMPORTANT: Always install a PPM when you install a processor. The system fails to boot if the corresponding PPM is missing.

NOTE: The PPM is keyed and the key must be aligned when installed.

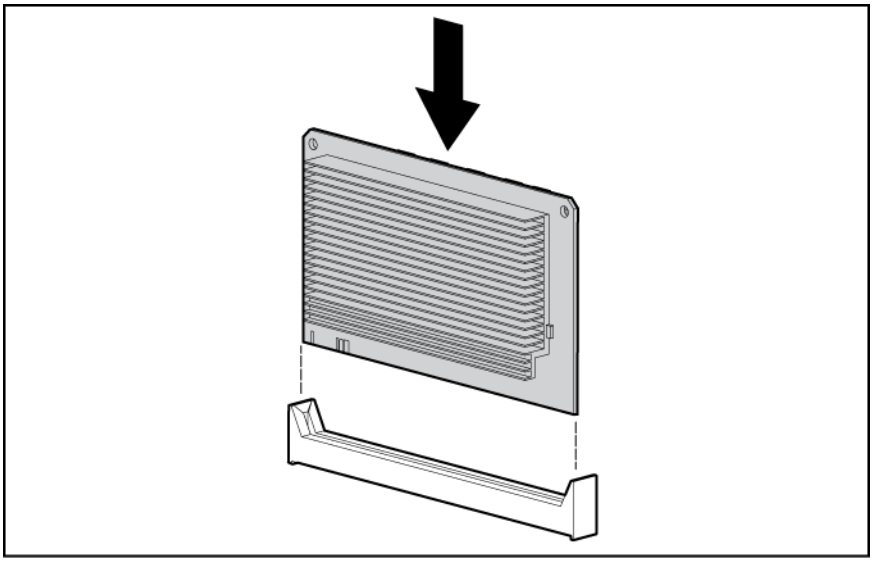

NOTE: The appearance of compatible PPMs may vary.

15. Close the processor memory module cover.

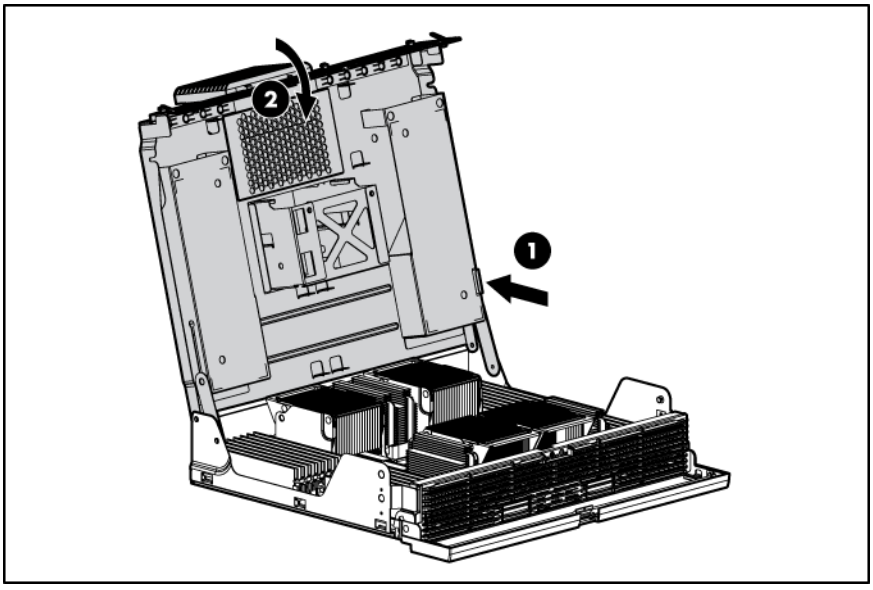

16. Install the fans.
17. Install the processor memory module into the server.
18. Power up the server (on page 27).

Memory options

The server contains 32 DIMM slots. You can expand server memory by installing supported PC2-5300 667-MHz or PC2-6400 800-MHz Registered DDR2 DIMMs. The maximum supported memory for this server is 256 GB using 32 8-GB DIMMs. DIMMS must be installed in decreasing capacity with the largest DIMMS installed in the banks furthest from each processor.

NOTE: Memory bus speeds will operate as follows: 2-4 DIMMs at 800MHz; 6 at 667MHz; 8 at 533MHz. PC2-5300 memory modules operate at 667 MHz with up to 4 DIMMs and 533MHz when using additional DIMMs.

Advanced ECC memory

Advanced ECC memory is the default memory protection mode for this server. In Advanced ECC, the server is protected against correctable memory errors. The server provides notification if the level of correctable errors exceeds a pre-defined threshold rate. The server does not fail because of correctable memory errors. Advanced ECC provides additional protection over Standard ECC because it is possible to correct certain memory errors that would otherwise be uncorrectable and result in a server failure.

Whereas standard ECC can correct single-bit memory errors, Advanced ECC can correct single-bit memory errors and multi-bit memory errors if all failed bits are on the same DRAM device on the DIMM.

Installing DIMMs

To operate the server, at least one pair of DIMMs must be installed in slots 1A and 2A ("DIMM slot identification" on page 9).

To add memory to the server, observe the following DIMM installation guidelines:

- DIMMs must be installed in pairs.
- DIMM installed on the same memory bank must have the same part number.
- DIMMs installed in different banks can be of different sizes.
- DIMMs must be installed in decreasing capacity with the largest DIMMs installed in the banks furthest from each processor.

> **NOTE:** If all four banks on a memory node ("DIMM slot identification" on page 9) are populated, the maximum memory clock speed is 533 MHz. If two or fewer banks on a memory node are populated, the maximum memory clock speed is 667 MHz.

To install a DIMM:

1. Power down the server (on page 27).
2. Remove the processor memory module, and open the cover ("Removing the processor memory module" on page 32).
3. Open the DIMM slot latches.
4. Install the DIMM.

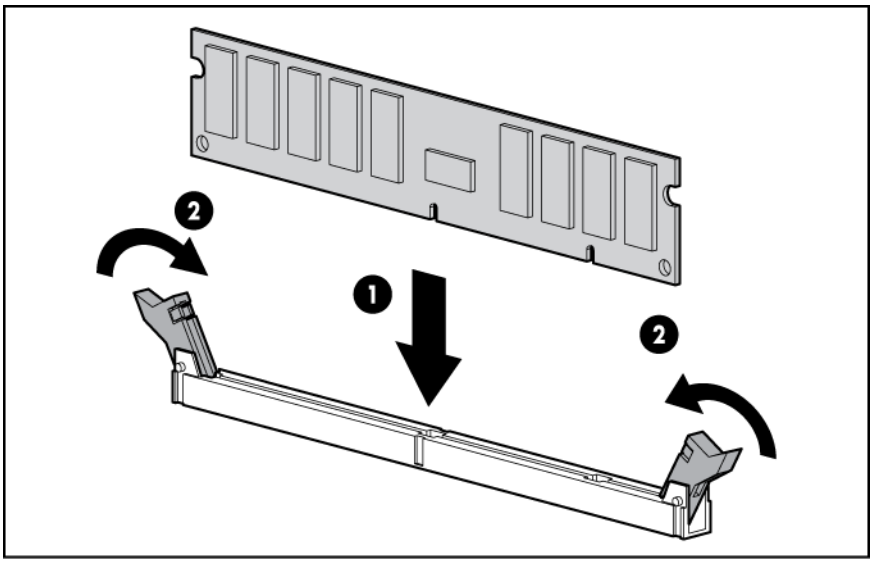

Hard drive guidelines

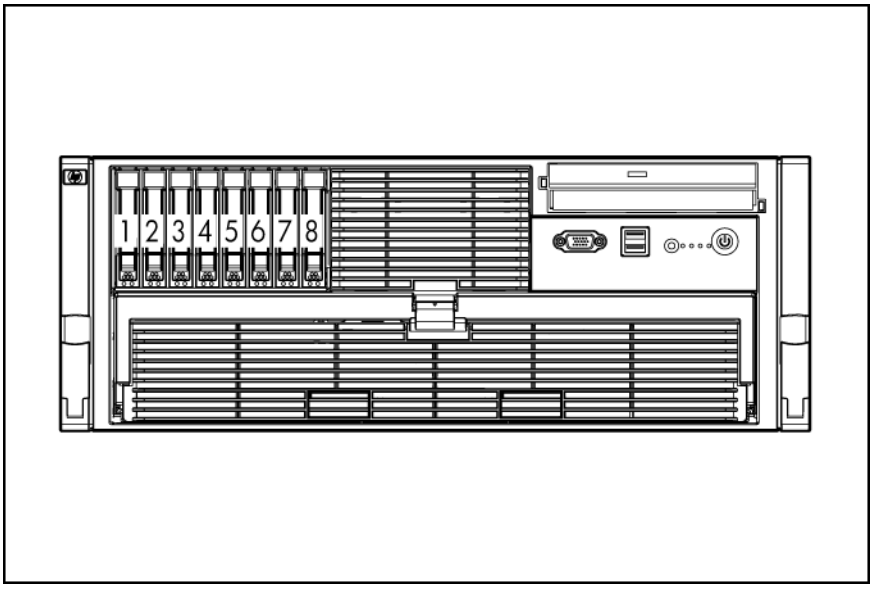

When adding hard drives to the server, observe the following general guidelines:

- The system automatically sets all device numbers.
- If only one hard drive is used, install it in the bay with the lowest device number.
- Hard drives must be SFF types.
- Drives should be the same capacity to provide the greatest storage space efficiency when drives are grouped together into the same drive array.
- The server supports up to eight SAS or SATA hot-plug hard drives.

Installing a hot-plug hard drive

△ **CAUTION:** To prevent improper cooling and thermal damage, do not operate the server unless all bays are populated with either a component or a blank.

1. Prepare the hard drive.

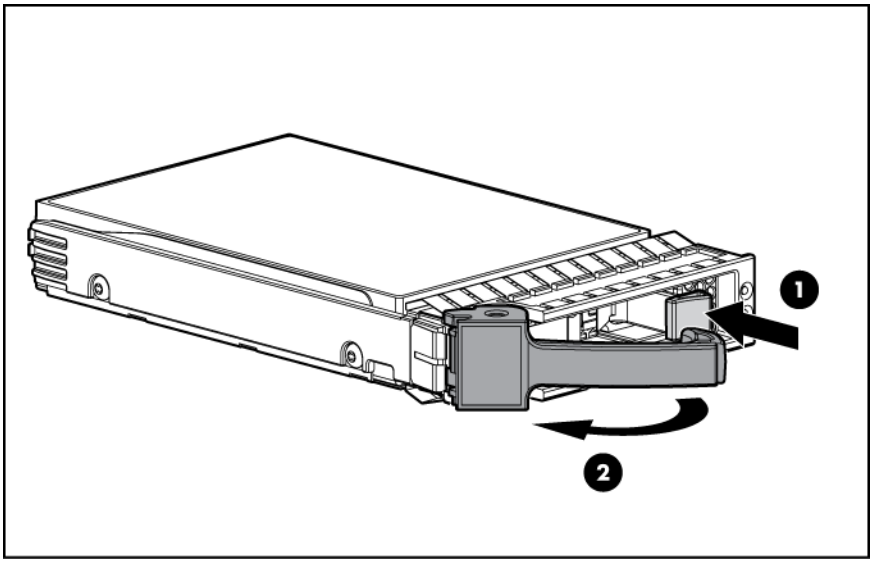

2. Install the hard drive into the server. Be sure that the hard drive seats firmly into the connector in the back of the drive cage.
3. Close the ejector lever.

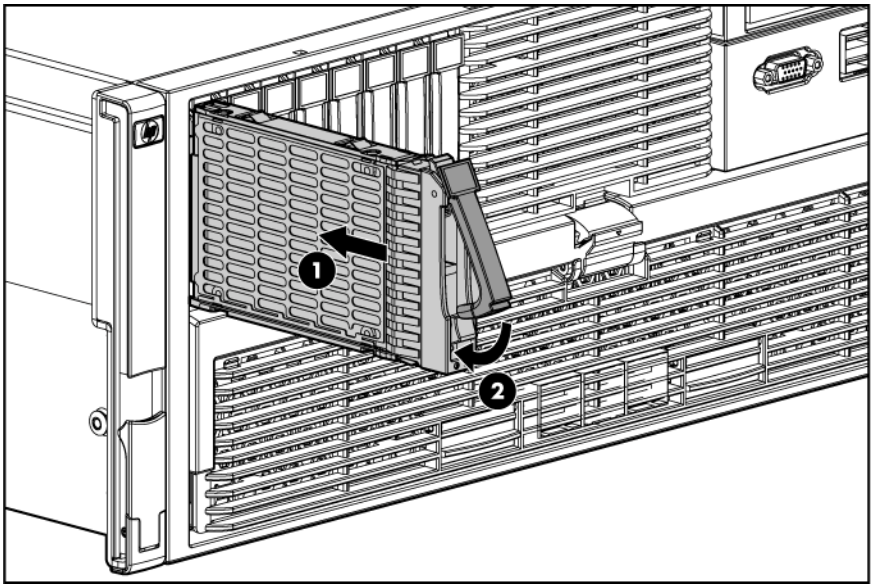

4. Determine the status of the hard drive from the hot-plug SAS hard drive LED combinations ("SAS and SATA hard drive LED combinations" on page 10).

Installing DVD, CD-ROM, or diskette drives

The server is shipped with one DVD drive. You can install an optional DVD drive, CD-ROM drive, or a 3.5-inch diskette drive.

To install an optional media drive:

1. Power down the server (on page 27).
2. Use the T-15 Torx screwdriver to eject the drive or drive blank, and pull it out of the server.

NOTE: The T-15 Torx screwdriver is shipped with the server and can be located on the rear panel ("Rear panel components" on page 11).

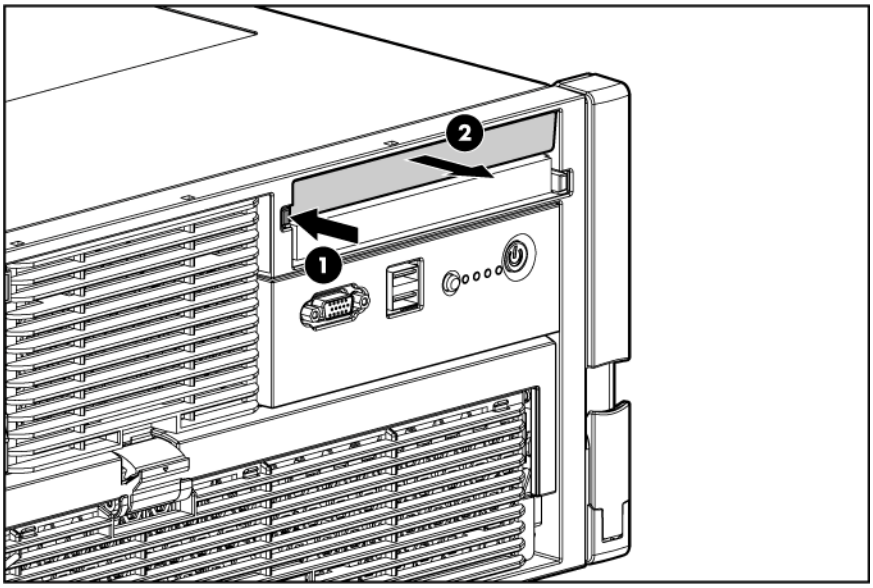

3. Install the media drive into the server.

CAUTION: To prevent improper cooling and thermal damage, do not operate the server unless all bays are populated with either a component or a blank.

IMPORTANT: By default, the DVD drive is installed in the lower drive bay. To boot from a DVD or CD-RW drive in the upper drive bay or to boot from a diskette drive in the lower bay, change the boot device selector switch to FLP BOT ("Boot device selector switch (SW1)" on page 16).

NOTE: If two DVD or CD-RW drives are installed in the server, the server will first attempt to boot from the primary drive ("Boot device selector switch (SW1)" on page 16). The boot device selector switch setting determines which drive is the primary drive.

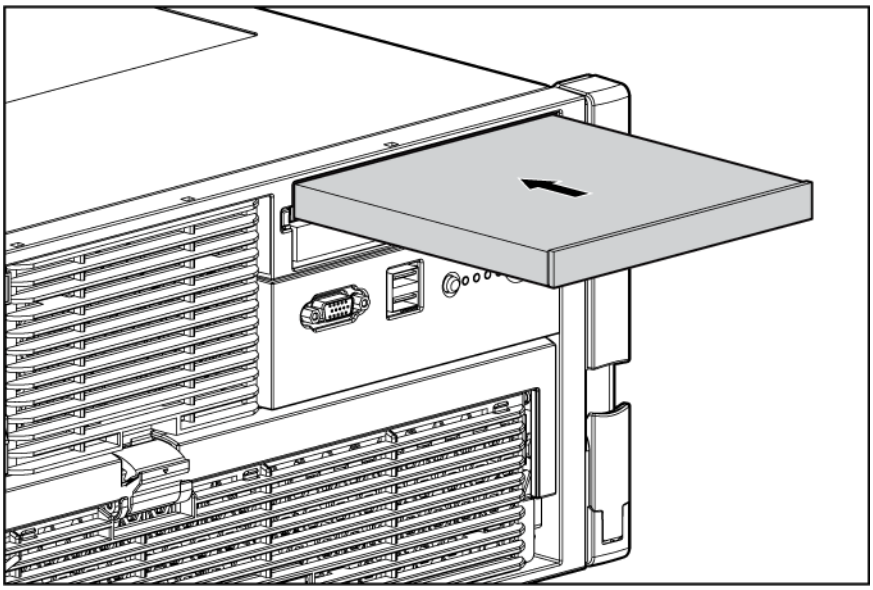

4. Power up the server (on page 27).

Hot-plug power supplies

The server supports a second hot-plug power supply to provide redundant power to the system in the event of a failure in the primary power supply. You can install or replace a second hot-plug power supply without powering down the server.

WARNING: To reduce the risk of electric shock or damage to the equipment:

- Do not disable the power cord grounding plug. The grounding plug is an important safety feature.
- Plug the power cord into a grounded (earthed) electrical outlet that is easily accessible at all times.
- Unplug the power cord from the power supply to disconnect power to the equipment.
- Do not route the power cord where it can be walked on or pinched by items placed against it. Pay particular attention to the plug, electrical outlet, and the point where the cord extends from the server.

CAUTION: If only one power supply is installed, do not remove the power supply unless the server has been powered down. Removing the only operational power supply will cause an immediate power loss.

NOTE: If you remove or replace the primary hot-plug power supply, use the T-15 Torx screwdriver provided with the server to remove the shipping screw. It is located just under the port-colored plastic handle of the power supply unit.

1. Remove the power supply blank.

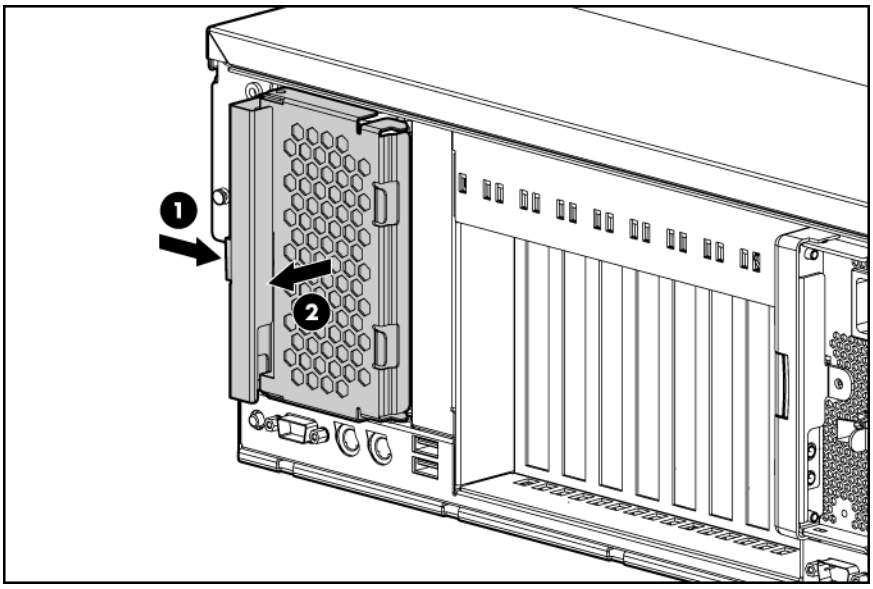

2. Install the power supply, and lock the lever.

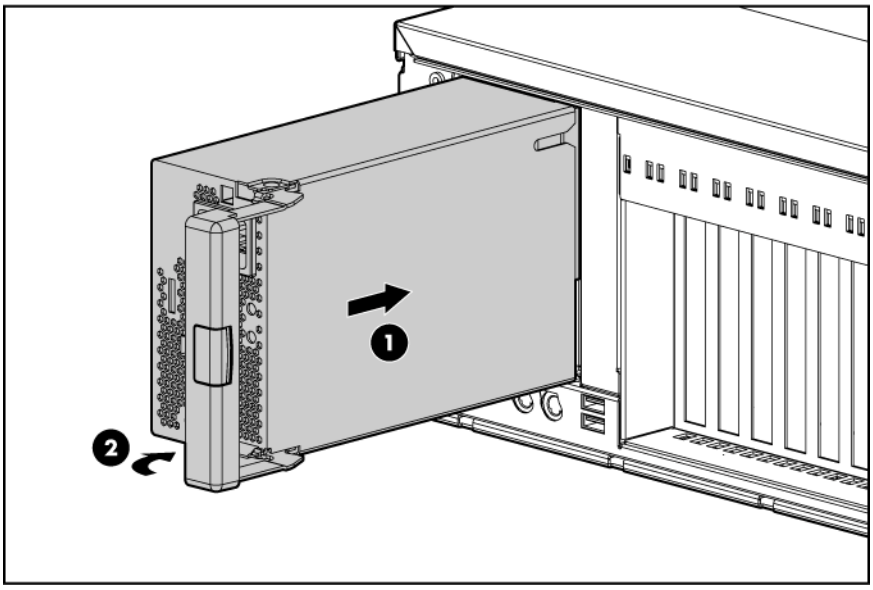

3. Connect the power cord to the power supply.
4. Secure the power cords to the retaining clip.
5. Connect the power cord to the power source.
6. Be sure that the power supply LED is green.
7. Be sure that the front panel external health LED is green.

IMPORTANT: For maximum server availability, be sure that the two power supplies are powered by separate AC power sources.

NOTE: If the server will be shipped to another location after configuration, install a shipping screw into each power supply.

Expansion boards

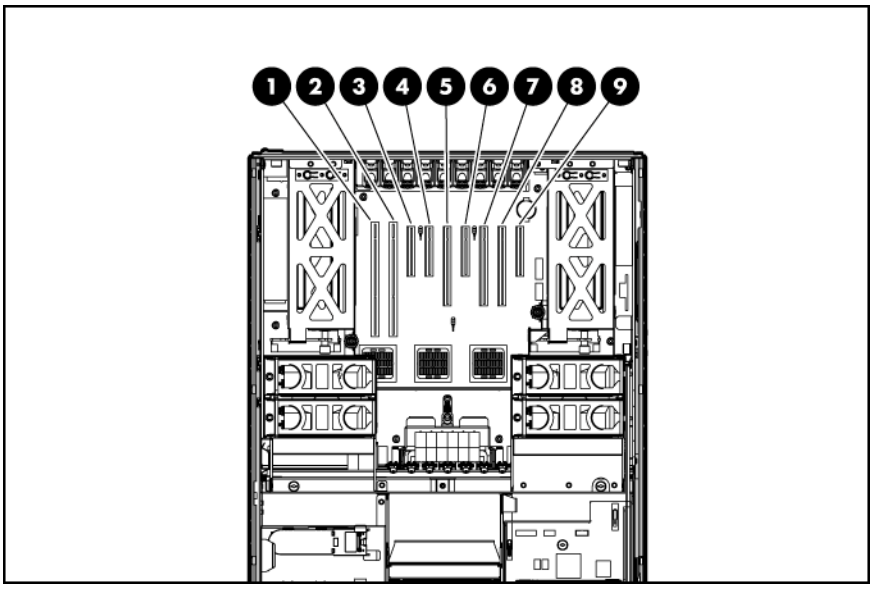

Slot	Description
1	PCI-X non-hot-plug expansion slot, 64-bit/100-MHz (half-length)
2	PCI-X non-hot-plug expansion slot, 64-bit/100-MHz (full-length)
3	PCI Express x4 non-hot-plug expansion slot (full-length)
4	PCI Express x4 non-hot-plug expansion slot (full-length)
5	PCI Express x8 non-hot-plug expansion slot (full-length)
6	PCI Express x4 non-hot-plug expansion slot (full-length)
7	PCI Express x8 non-hot-plug expansion slot (full-length)
8	PCI Express x8 non-hot-plug expansion slot (full-length)
9	PCI Express x4 non-hot-plug expansion slot (half-length)

Installing an expansion board

CAUTION: To prevent damage to the server or expansion boards, power down the server and remove all AC power cords before removing or installing the expansion boards.

CAUTION: To prevent improper cooling and thermal damage, do not operate the server unless all expansion slots have either an expansion slot cover or an expansion board installed.

1. Power down the server (on page 27).
2. Extend the server from the rack ("Extending the server from the rack" on page 27).
3. Remove the access panel ("Removing the access panel" on page 28).
4. Open the latch, and remove the expansion slot cover.

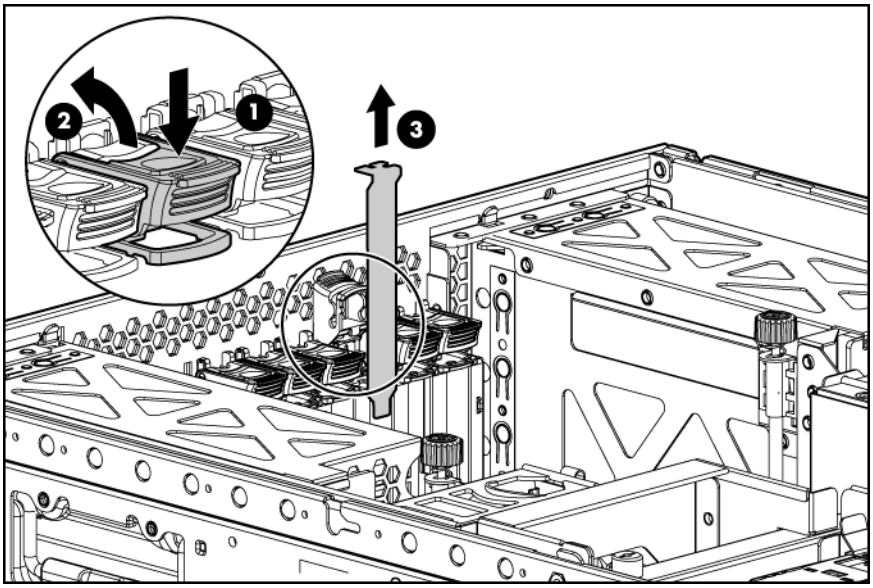

To replace the component, reverse the removal procedure.

5. Unlock the retaining clip (for full-length expansion boards).

6. Install the expansion board.

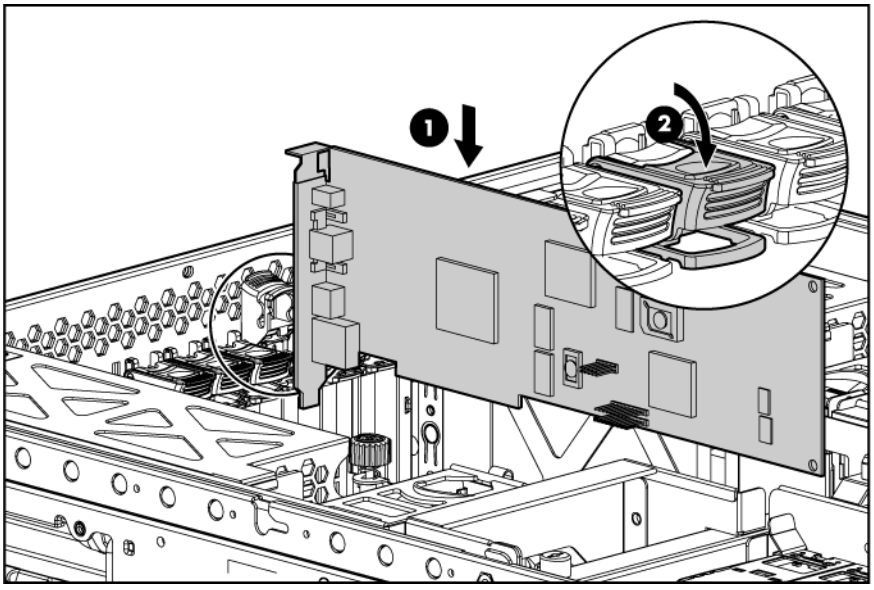

7. Lock the retaining clip (for full-length expansion boards), and close the latch.
8. Connect any required internal or external cables to the expansion board.
9. Replace the access panel ("Removing the access panel" on page 28).
10. Slide the server into the rack.
11. Power up the server (on page 27).

Battery-backed write cache

The HP BBWC protects against hard boot, power, controller, and system board failures. The server supports the following battery-backed options:

- 256-MB BBWC option
- 512-MB BBWC option

The BBWC consists of two parts: a battery pack and a storage cache module.

Along with the cache module, the battery pack provides transportable data protection, increases overall controller performance, and maintains any cached data for up to 72 hours after the server loses power. The NiMH batteries in the battery pack are continuously recharged through a trickle-charging process whenever the system power is on.

CAUTION: To prevent a server malfunction or damage to the equipment, do not add or remove the battery pack while an array capacity expansion, RAID level migration, or stripe size migration is in progress.

CAUTION: After the server is powered down, wait 15 seconds and then check the amber LED before unplugging the cable from the cache module. If the amber LED blinks after 15 seconds, do not remove the cable from the cache module. The cache module is backing up data, and data is lost if the cable is detached.

IMPORTANT: The battery pack might have a low charge when installed. In this case, a POST error message is displayed when the server is powered up, indicating that the battery pack is

temporarily disabled. No action is necessary on your part. The internal circuitry automatically recharges the batteries and enables the battery pack. This process might take up to four hours. During this time, the cache module functions properly, but without the performance advantage of the battery pack.

NOTE: The data protection and the time limit also apply if a power outage occurs. When power is restored to the system, an initialization process writes the preserved data to the hard drives.

To upgrade the BBWC:

1. Close all applications, and power down the server (on page 27). This procedure flushes all data from the cache.
2. Extend the server from the rack ("Extending the server from the rack" on page 27).
3. Remove the access panel ("Removing the access panel" on page 28).
4. If the existing cache is connected to a battery, observe the BBWC Status LED ("Battery pack LEDs" on page 18).
   - If the LED is blinking every 2 seconds, data is still trapped in the cache. Restore system power, and repeat the previous steps.
   - If the LED is not lit, disconnect the battery cable from the cache.

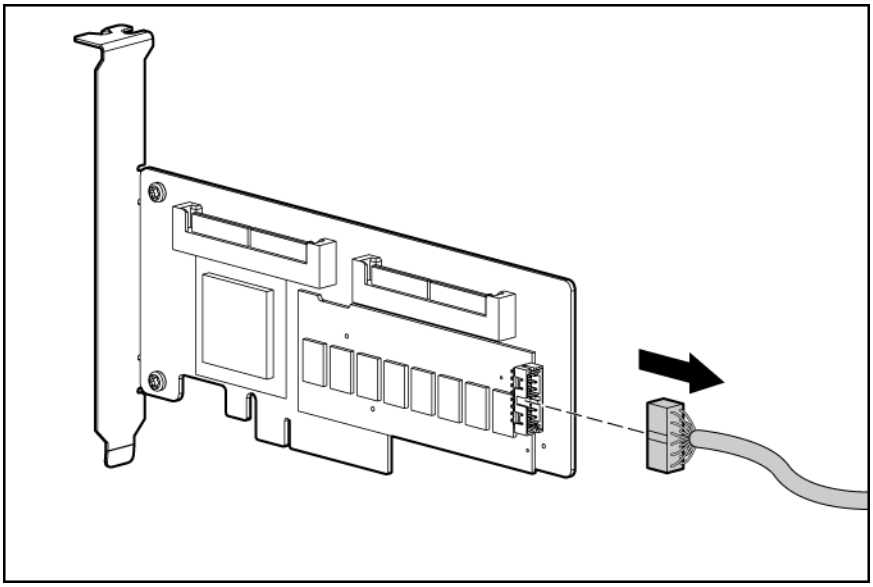

5. Remove the controller.

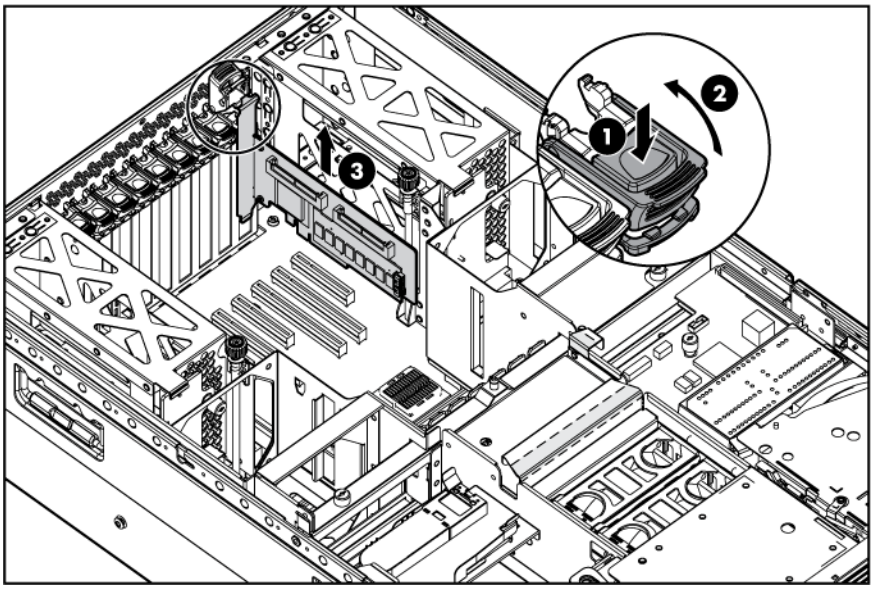

6. Remove the cache module from the controller.

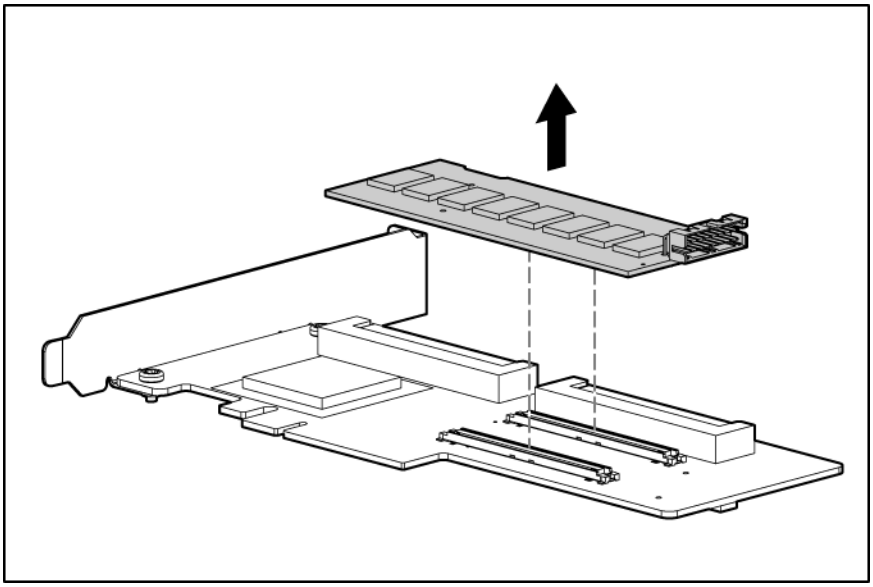

7. Install the new cache on the controller. Press firmly above each connector to ensure good electrical contact.

IMPORTANT: If the cache is not properly connected, the controller will not boot.

8. Replace the controller in the server. The controller is installed in expansion slot 9.
9. Install the battery, if applicable.

a. Plug the battery cable (supplied in the battery pack kit) into the battery pack.

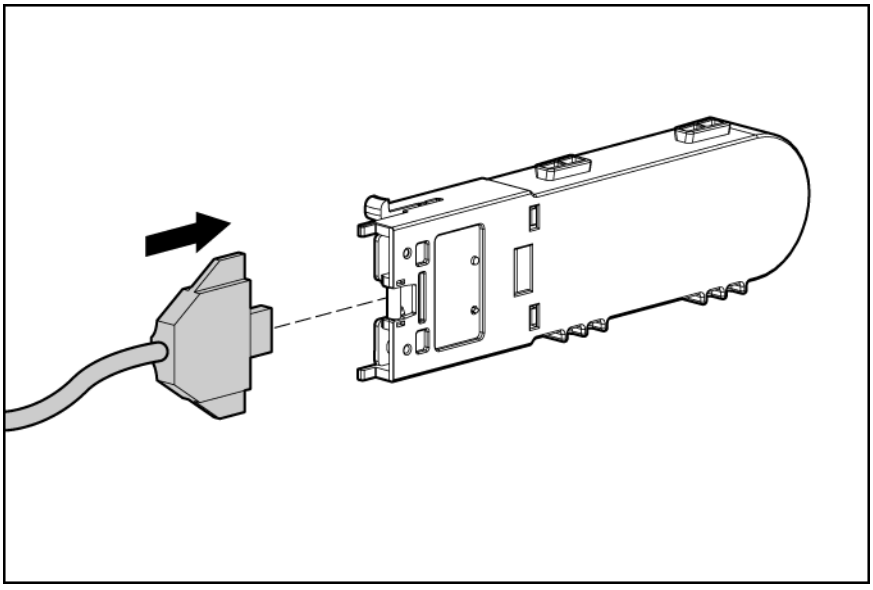

b. Install the battery pack into the server.

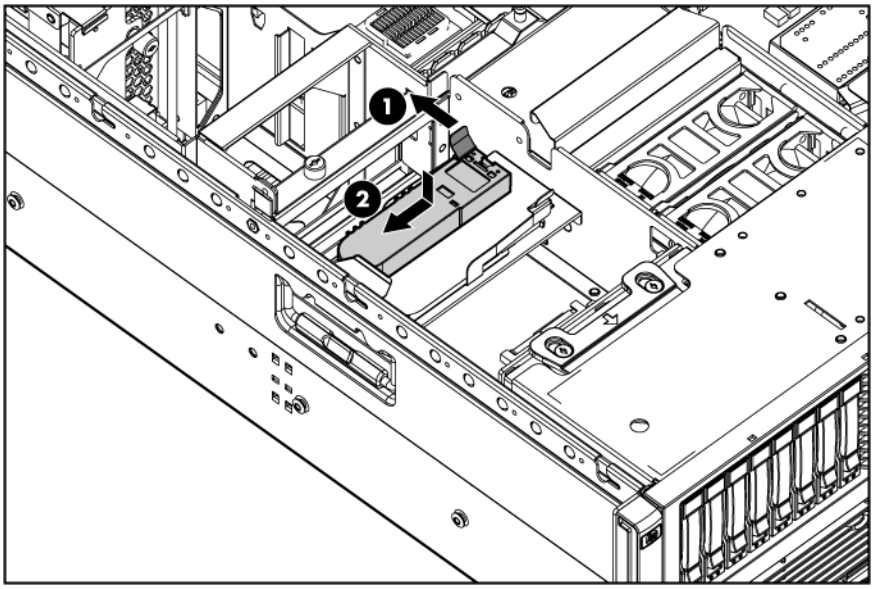

10. Route the cable, and connect it to the cache module.

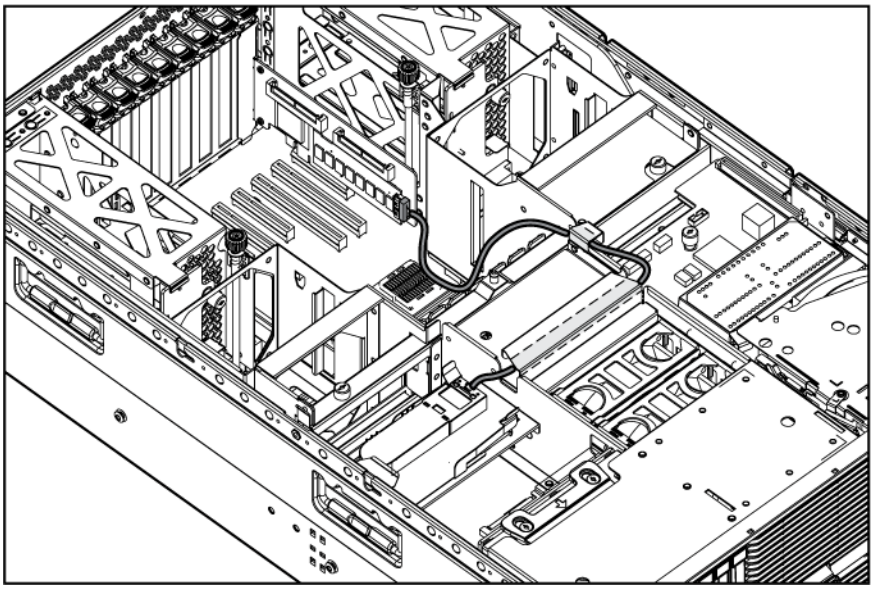

NOTE: After installing a battery pack, you might see a POST message during reboot indicating that the array accelerator (cache) is temporarily disabled. This is normal, because the new battery pack is likely to have a low charge. You do not need to take any action, because the recharge process begins automatically when the battery pack is installed. The controller will operate properly while the battery pack recharges, although the performance advantage of the array accelerator will be absent. When the battery pack has been charged to a satisfactory level, the array accelerator will automatically be enabled.

Cabling

Cabling overview

This section provides guidelines that help you make informed decisions about cabling the server and hardware options to optimize performance.

For information on cabling peripheral components, refer to the white paper on high-density deployment at the HP website (http://www.hp.com/products/servers/platforms).

BBWC cabling

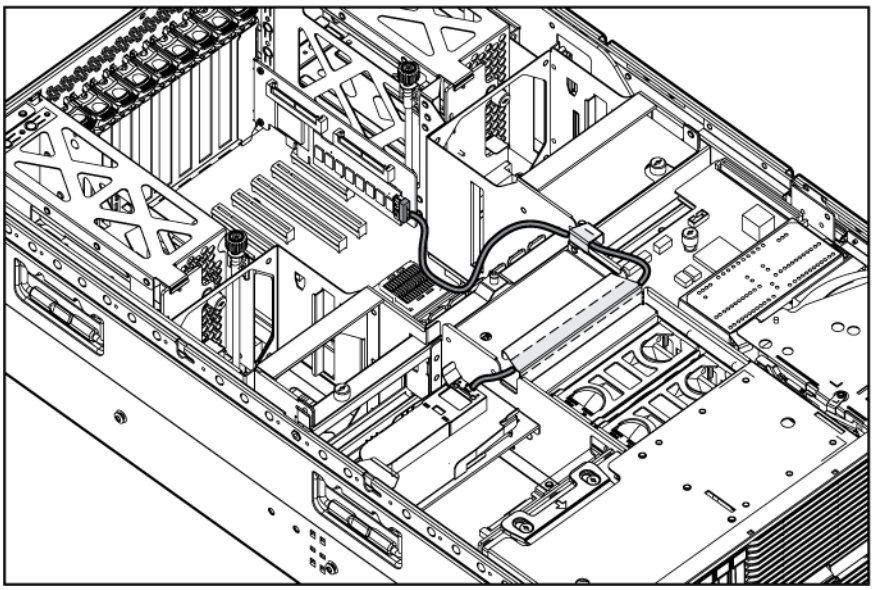

Front panel cable components

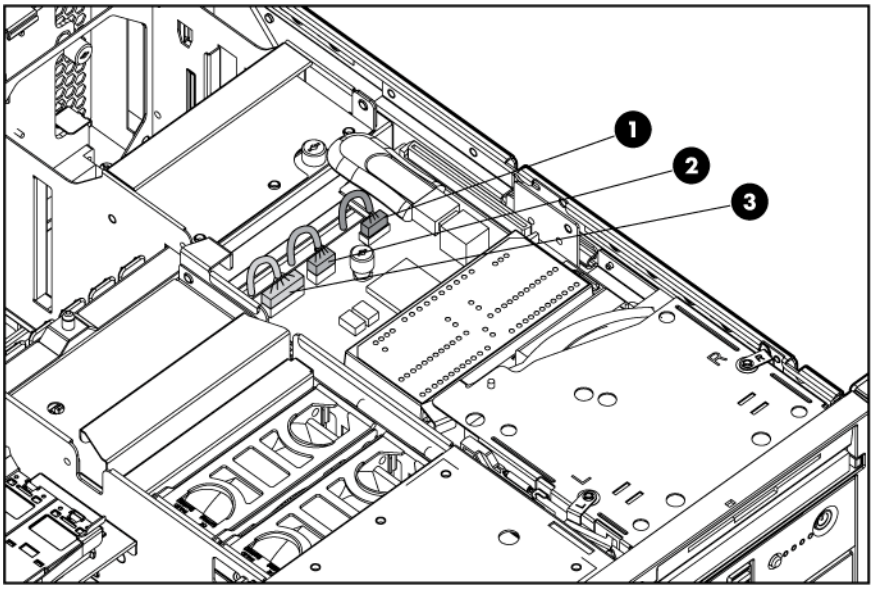

Item	Description
1	Video connector cable assembly
2	USB connector cable assembly
3	Power button cable assembly

SAS and SATA hard drive cabling

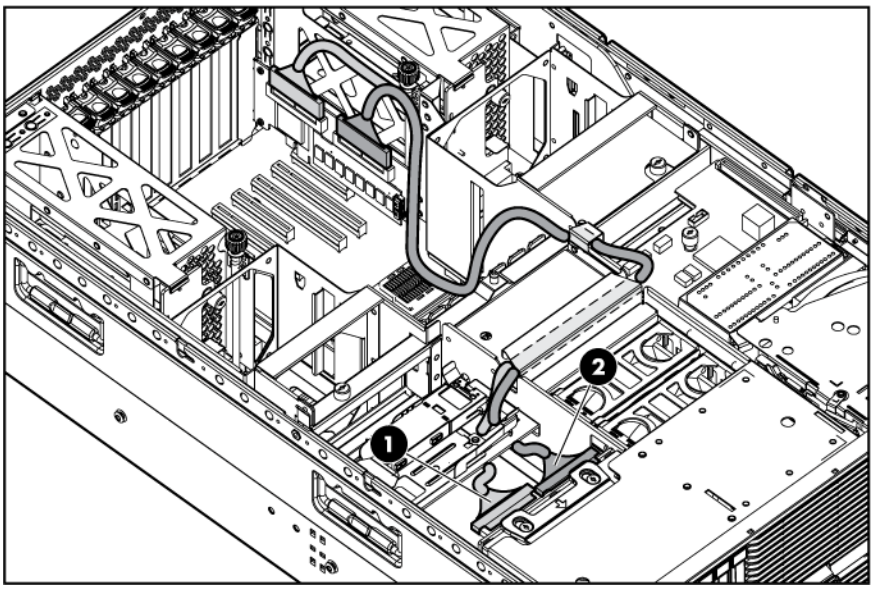

△ **CAUTION:** When routing cables, always be sure that the cables are not in a position where they can be pinched or crimped.

Software and configuration utilities

Configuration tools

SmartStart software

SmartStart is a collection of software that optimizes single-server setup, providing a simple and consistent way to deploy server configuration. SmartStart has been tested on many ProLiant server products, resulting in proven, reliable configurations.

SmartStart assists the deployment process by performing a wide range of configuration activities, including:

- Configuring hardware using embedded configuration utilities, such as RBSU and ORCA
- Preparing the system for installing "off-the-shelf" versions of leading operating system software
- Installing optimized server drivers, management agents, and utilities automatically with every assisted installation
- Testing server hardware using the Insight Diagnostics Utility ("HP Insight Diagnostics" on page 62)
- Installing software drivers directly from the CD. With systems that have internet connection, the SmartStart Autorun Menu provides access to a complete list of ProLiant system software.
- Enabling access to the Array Configuration Utility (on page 58), Array Diagnostic Utility (on page 62), and Erase Utility

SmartStart is included in the HP ProLiant Essentials Foundation Pack. For more information about SmartStart software, refer to the HP ProLiant Essentials Foundation Pack or the HP website (http://h18013.www1.hp.com/products/servers/management/smartstart/index.html).

SmartStart Scripting Toolkit

The SmartStart Scripting Toolkit is a server deployment product that delivers an unattended automated installation for high-volume server deployments. The SmartStart Scripting Toolkit is designed to support ProLiant BL, ML, and DL servers. The toolkit includes a modular set of utilities and important documentation that describes how to apply these new tools to build an automated server deployment process.

Using SmartStart technology, the Scripting Toolkit provides a flexible way to create standard server configuration scripts. These scripts are used to automate many of the manual steps in the server configuration process. This automated server configuration process cuts time from each server deployed, making it possible to scale server deployments to high volumes in a rapid manner.

For more information, and to download the SmartStart Scripting Toolkit, refer to the HP website (http://www.hp.com/servers/sstoolkit).

HP ROM-Based Setup Utility

RBSU is a configuration utility embedded in ProLiant servers that performs a wide range of configuration activities that can include the following:

- Configuring system devices and installed options
- Enabling and disabling system features
- Displaying system information
- Selecting the primary boot controller
- Configuring memory options
- Language selection

For more information on RBSU, see the *HP ROM-Based Setup Utility User Guide* on the Documentation CD or the HP website (http://www.hp.com/support/smartstart/documentation).

Auto-configuration process

The auto-configuration process automatically runs when you boot the server for the first time. During the power-up sequence, the system ROM automatically configures the entire system without needing any intervention. During this process, the ORCA utility, in most cases, automatically configures the array to a default setting based on the number of drives connected to the server.

NOTE: The server may not support all the following examples.

NOTE: If the boot drive is not empty or has been written to in the past, ORCA does not automatically configure the array. You must run ORCA to configure the array settings.

Drives installed	Drives used	RAID level
1	1	RAID 0
2	2	RAID 1
3, 4, 5, or 6	3, 4, 5, or 6	RAID 5
More than 6	0	None

To change any ORCA default settings and override the auto-configuration process, press the **F8** key when prompted.

By default, the auto-configuration process configures the system for the English language. To change any default settings in the auto-configuration process (such as the settings for language, operating system, and primary boot controller), execute RBSU by pressing the **F9** key when prompted. After the settings are selected, exit RBSU and allow the server to reboot automatically.

For more information on RBSU, see the *HP ROM-Based Setup Utility User Guide* on the Documentation CD or the HP website (http://www.hp.com/support/smartstart/documentation).

BIOS Serial Console

BIOS Serial Console allows you to configure the serial port to view POST error messages and run RBSU remotely through a serial connection to the server COM port. The server that you are remotely configuring does not require a keyboard and mouse.

For more information about BIOS Serial Console, see the *BIOS Serial Console User Guide* on the Documentation CD or the HP website (http://www.hp.com/support/smartstart/documentation).

Boot options

Near the end of the boot process, the boot options screen is displayed. This screen is visible for several seconds before the system attempts to boot from a supported boot device. During this time, you can do the following:

- Access RBSU by pressing the **F9** key.
- Access the System Maintenance Menu (which enables you to launch ROM-based Diagnostics or Inspect) by pressing the **F10** key.
- Force a PXE Network boot by pressing the **F12** key.

Using RBSU

To use RBSU, use the following keys:

- To access RBSU, press the **F9** key during power-up when prompted.
- To navigate the menu system, use the arrow keys.
- To make selections, press the **Enter** key.
- To access Help for a highlighted configuration option, press the **F1** key.

IMPORTANT: RBSU automatically saves settings when you press the **Enter** key. The utility does not prompt you for confirmation of settings before you exit the utility. To change a selected setting, you must select a different setting and press the **Enter** key.

Default configuration settings are applied to the server at one of the following times:

- Upon the first system power-up
- After defaults have been restored

Default configuration settings are sufficient for proper typical server operation, but configuration settings can be modified using RBSU. The system will prompt you for access to RBSU with each power-up.

HP ProLiant Essentials Rapid Deployment Pack

The RDP software is the preferred method for rapid, high-volume server deployments. The RDP software integrates two powerful products: Altiris Deployment Solution and the HP ProLiant Integration Module.

The intuitive graphical user interface of the Altiris Deployment Solution console provides simplified point-and-click and drag-and-drop operations that enable you to deploy target servers, including server blades, remotely. It enables you to perform imaging or scripting functions and maintain software images.

For more information about the RDP, refer to the HP ProLiant Essentials Rapid Deployment Pack CD or refer to the HP website (http://www.hp.com/servers/rdp).

Option ROM Configuration for Arrays

Before installing an operating system, you can use the ORCA utility to create the first logical drive, assign RAID levels, and establish online spare configurations.

The utility also provides support for the following functions:

- Reconfiguring one or more logical drives
- Viewing the current logical drive configuration
- Deleting a logical drive configuration
- Setting the controller to be the boot controller

If you do not use the utility, ORCA will default to the standard configuration.

For more information regarding array controller configuration, refer to the controller user guide.

For more information regarding the default configurations that ORCA uses, refer to the *HP ROM-Based Setup Utility User Guide* on the Documentation CD.

Array Configuration Utility

ACU is a browser-based utility with the following features:

- Runs as a local application or remote service
- Supports online array capacity expansion, logical drive extension, assignment of online spares, and RAID or stripe size migration
- Suggests the optimum configuration for an unconfigured system
- Provides different operating modes, enabling faster configuration or greater control over the configuration options
- Remains available any time that the server is on
- Displays on-screen tips for individual steps of a configuration procedure

For optimum performance, the minimum display settings are 800 × 600 resolution and 256 colors. Servers running Microsoft® operating systems require Internet Explorer 5.5 (with Service Pack 1) or later. For Linux servers, refer to the README.TXT file for additional browser and support information.

For more information, refer to the *Configuring Arrays on HP Smart Array Controllers Reference Guide* on the Documentation CD or the HP website (http://www.hp.com).

Re-entering the server serial number and product ID

After you replace the system board, you must re-enter the server serial number and the product ID.

1. During the server startup sequence, press the **F9** key to access RBSU.
2. Select the **Advanced Options** menu.
3. Select **Serial Number.** The following warning is displayed:

   ```
   Warning: The serial number should ONLY be modified by qualified service
   personnel. This value should always match the serial number located on
   the chassis.
   ```

4. Press the **Enter** key to clear the warning.
5. Enter the serial number.
6. Select **Product ID.** The following warning is displayed.

```
Warning: The Product ID should ONLY be modified by qualified service
personnel. This value should always match the Product ID located on the
chassis.
```

7. Enter the product ID and press the **Enter** key.
8. Press the **Escape** key to close the menu.
9. Press the **Escape** key to exit RBSU.
10. Press the **F10** key to confirm exiting RBSU. The server will automatically reboot.

Management tools

Automatic Server Recovery

ASR is a feature that causes the system to restart when a catastrophic operating system error occurs, such as a blue screen, ABEND, or panic. A system fail-safe timer, the ASR timer, starts when the System Management driver, also known as the Health Driver, is loaded. When the operating system is functioning properly, the system periodically resets the timer. However, when the operating system fails, the timer expires and restarts the server.

ASR increases server availability by restarting the server within a specified time after a system hang or shutdown. At the same time, the HP SIM console notifies you by sending a message to a designated pager number that ASR has restarted the system. You can disable ASR from the HP SIM console or through RBSU.

Integrated Lights-Out 2 technology

The iLO 2 subsystem is a standard component of selected ProLiant servers that provides server health and remote server manageability. The iLO 2 subsystem includes an intelligent microprocessor, secure memory, and a dedicated network interface. This design makes iLO 2 independent of the host server and its operating system. The iLO 2 subsystem provides remote access to any authorized network client, sends alerts, and provides other server management functions.

Using iLO 2, you can:

- Remotely power up, power down, or reboot the host server.
- Send alerts from iLO 2 regardless of the state of the host server.
- Access advanced troubleshooting features through the iLO 2 interface.
- Diagnose iLO 2 using HP SIM through a web browser and SNMP alerting.

For more information about iLO 2 features (which may require an iLO Advanced Pack or iLO Advanced for BladeSystem license), see the iLO 2 documentation on the Documentation CD or on the HP website (http://www.hp.com/servers/lights-out).

StorageWorks library and tape tools

HP StorageWorks L&TT provides functionality for firmware downloads, verification of device operation, maintenance procedures, failure analysis, corrective service actions, and some utility functions. It also provides seamless integration with HP hardware support by generating and emailing support tickets that deliver a snapshot of the storage system.

For more information, and to download the utility, refer to the StorageWorks L&TT website (http://h18006.www1.hp.com/products/storageworks/ltt).

Management Agents

Management Agents provide the information to enable fault, performance, and configuration management. The agents allow easy manageability of the server through HP SIM software, and third-party SNMP management platforms. Management Agents are installed with every SmartStart assisted installation or can be installed through the HP PSP. The Systems Management homepage provides status and direct access to in-depth subsystem information by accessing data reported through the Management Agents. For additional information, refer to the Management CD in the HP ProLiant Essentials Foundation Pack or the HP website (http://www.hp.com/servers/manage).

HP Systems Insight Manager

HP SIM is a web-based application that allows system administrators to accomplish normal administrative tasks from any remote location, using a web browser. HP SIM provides device management capabilities that consolidate and integrate management data from HP and third-party devices.

IMPORTANT: You must install and use HP SIM to benefit from the Pre-Failure Warranty for processors, SAS and SATA hard drives, and memory modules.

For additional information, refer to the Management CD in the HP ProLiant Essentials Foundation Pack or the HP SIM website (http://www.hp.com/go/hpsim).

Redundant ROM support

The server enables you to upgrade or configure the ROM safely with redundant ROM support. The server has a 4-MB ROM that acts as two, separate 2-MB ROMs. In the standard implementation, one side of the ROM contains the current ROM program version, while the other side of the ROM contains a backup version.

NOTE: The server ships with the same version programmed on each side of the ROM.

Safety and security benefits

When you flash the system ROM, ROMPaq writes over the backup ROM and saves the current ROM as a backup, enabling you to switch easily to the alternate ROM version if the new ROM becomes corrupted for any reason. This feature protects the existing ROM version, even if you experience a power failure while flashing the ROM.

Access to redundant ROM settings

To access the redundant ROM through RBSU:

1. Access RBSU by pressing the **F9** key during powerup when the prompt is displayed in the upper right corner of the screen.
2. Select **Advanced Options**.
3. Select **Redundant ROM Selection**.

4. Select the ROM version.
5. Press the **Enter** key.
6. Press the **Esc** key to exit the current menu or press the **F10** key to exit RBSU. The server restarts automatically.

ROMPaq utility

The ROMPaq utility enables you to upgrade the system firmware (BIOS). To upgrade the firmware, insert a ROMPaq diskette into the diskette drive or ROMPaq USB Key into an available USB port and boot the system. Online versions of the ROMPaq utility are also available for updating the system firmware.

The ROMPaq utility checks the system and provides a choice (if more than one exists) of available firmware revisions.

For more information about the ROMPaq utility, see the HP website (http://www.hp.com/go/support).

System Online ROM flash component utility

The Online ROM Flash Component Utility enables system administrators to efficiently upgrade system or controller ROM images across a wide range of servers and array controllers. This tool has the following features:

- Works offline and online
- Supports Microsoft® Windows NT®, Windows® 2000, Windows Server® 2003, Novell Netware, and Linux operating systems



IMPORTANT: This utility supports operating systems that may not be supported by the server. For operating systems supported by the server, see the HP website (http://www.hp.com/support).

- Integrates with other software maintenance, deployment, and operating system tools
- Automatically checks for hardware, firmware, and operating system dependencies, and installs only the correct ROM upgrades required by each target server

To download the tool and for more information, see the HP website (http://www.hp.com/support).

USB support

HP provides both standard USB 2.0 support and legacy USB 2.0 support. Standard support is provided by the OS through the appropriate USB device drivers. Before the OS loads, HP provides support for USB devices through legacy USB support, which is enabled by default in the system ROM.

Legacy USB support provides USB functionality in environments where USB support is not available normally. Specifically, HP provides legacy USB functionality for the following:

- POST
- RBSU
- Diagnostics
- DOS
- Operating environments which do not provide native USB support

Diagnostic tools

HP Insight Diagnostics

HP Insight Diagnostics is a proactive server management tool, available in both offline and online versions, that provides diagnostics and troubleshooting capabilities to assist IT administrators who verify server installations, troubleshoot problems, and perform repair validation.

HP Insight Diagnostics Offline Edition performs various in-depth system and component testing while the OS is not running. To run this utility, launch the SmartStart CD.

HP Insight Diagnostics Online Edition is a web-based application that captures system configuration and other related data needed for effective server management. Available in Microsoft® Windows® and Linux versions, the utility helps to ensure proper system operation.

For more information or to download the utility, refer to the HP website (http://www.hp.com/servers/diags).

Integrated Management Log

The IML records hundreds of events and stores them in an easy-to-view form. The IML timestamps each event with 1-minute granularity.

You can view recorded events in the IML in several ways, including the following:

- From within HP SIM ("HP Systems Insight Manager" on page 60)
- From within Survey Utility
- From within operating system-specific IML viewers
  - For NetWare: IML Viewer
  - For Windows®: IML Viewer
  - For Linux: IML Viewer Application
- From within the iLO 2 user interface
- From within HP Insight Diagnostics (on page 62)

For more information, refer to the Management CD in the HP ProLiant Essentials Foundation Pack.

Array Diagnostic Utility

The HP Array Diagnostics Utility is a web-based application that creates a report of all HP storage controllers and disk drives. This report provides vital information to assist in identifying faults or conditions that may require attention. ADU can be accessed from the SmartStart CD ("SmartStart software" on page 55) or downloaded from the HP website (http://www.hp.com).

Remote support and analysis tools

HP Insight Remote Support software

HP Insight Remote Support software delivers secure remote support for your HP Servers and Storage, 24 X 7, so you can spend less time solving problems and more time focused on your business. You can have your systems remotely monitored for hardware failure using secure technology that has been proven at thousands of companies around the world. In many cases, you can avoid problems before they occur. There are two HP Insight Remote Support solutions:

- For small and midsize environments: HP Insight Remote Support Standard provides basic remote monitoring, notification/advisories and service dispatch. It is optimized for environments with 1 to 50 servers and can be installed on a shared HP ProLiant Windows application server. The software supports HP EVA storage devices, HP ProLiant, BladeSystems, HP Integrity and HP 9000 servers running Microsoft Windows, Red Hat Enterprise Linux, Novell SUSE and Novell Netware. Download from the HP website (http://h20392.www2.hp.com/portal/swdepot/displayProductInfo.do?productNumber=RSSWMBASE).
- For midsize and large environments: HP Insight Remote Support Pack (formerly Service Essentials Remote Support Pack) is targeted for larger environments and is integrated with HP Systems Insight Manager (SIM). It provides comprehensive remote monitoring, notification/advisories, dispatch and proactive service support for nearly all HP servers, storage, network and SAN environments, plus selected Dell and IBM Windows servers that have a support obligation with HP. It also enables HP to deliver higher levels of proactive support in line with HP Mission Critical Services support agreements. Download from the HP website (http://h20392.www2.hp.com/portal/swdepot/displayProductInfo.do?productNumber=ISDVD).

Both HP Insight Remote Support solutions are available at no additional cost to customers with a valid warranty on HP technology, an HP Care Pack Service or HP contractual support agreement.

For more information, see the HP website (http://www.hp.com/go/insightremotesupport).

Keeping the system current

Drivers

The server includes new hardware that may not have driver support on all operating system installation media.

If you are installing a SmartStart-supported operating system, use the SmartStart software (on page 55) and its Assisted Path feature to install the operating system and latest driver support.

> **NOTE:** If you are installing drivers from the SmartStart CD or the Software Maintenance CD, refer to the SmartStart website (http://www.hp.com/servers/smartstart) to be sure that you are using the latest version of SmartStart. For more information, refer to the documentation provided with the SmartStart CD.

If you do not use the SmartStart CD to install an operating system, drivers for some of the new hardware are required. These drivers, as well as other option drivers, ROM images, and value-add software can be downloaded from the HP website (http://www.hp.com/support).



IMPORTANT: Always perform a backup before installing or updating device drivers.

ProLiant Support Packs

PSPs represent operating system-specific bundles of ProLiant optimized drivers, utilities, and management agents. Refer to the PSP website (http://h18000.www1.hp.com/products/servers/management/psp.html).

Operating system version support

Refer to the operating system support matrix (http://www.hp.com/go/supportos).

Change control and proactive notification

HP offers Change Control and Proactive Notification to notify customers 30 to 60 days in advance of upcoming hardware and software changes on HP commercial products.

For more information, refer to the HP website (http://www.hp.com/go/pcn).

Care Pack

HP Care Pack Services offer upgraded service levels to extend and expand standard product warranty with easy-to-buy, easy-to-use support packages that help you make the most of your server investments. Refer to the Care Pack website (http://www.hp.com/hps/carepack/servers/cp_proliant.html).

Troubleshooting

Troubleshooting resources

The *HP ProLiant Servers Troubleshooting Guide* provides procedures for resolving common problems and comprehensive courses of action for fault isolation and identification, error message interpretation, issue resolution, and software maintenance on ProLiant servers and server blades. This guide includes problem-specific flowcharts to help you navigate complex troubleshooting processes. To view the guide, select a language:

- English (http://www.hp.com/support/ProLiant_TSG_en)
- French (http://www.hp.com/support/ProLiant_TSG_fr)
- Italian (http://www.hp.com/support/ProLiant_TSG_it)
- Spanish (http://www.hp.com/support/ProLiant_TSG_sp)
- German (http://www.hp.com/support/ProLiant_TSG_gr)
- Dutch (http://www.hp.com/support/ProLiant_TSG_nl)
- Japanese (http://www.hp.com/support/ProLiant_TSG_jp)

Pre-diagnostic steps

WARNING: To avoid potential problems, ALWAYS read the warnings and cautionary information in the server documentation before removing, replacing, reseating, or modifying system components.

IMPORTANT: This guide provides information for multiple servers. Some information may not apply to the server you are troubleshooting. Refer to the server documentation for information on procedures, hardware options, software tools, and operating systems supported by the server.

1. Review the important safety information (on page 65).
2. Gather symptom information (on page 67).
3. Prepare the server for diagnosis (on page 68).
4. Use the Start diagnosis flowchart (on page 69) to begin the diagnostic process.

Important safety information

Familiarize yourself with the safety information in the following sections before troubleshooting the server.

Important safety information

Before servicing this product, read the *Important Safety Information* document provided with the server.

Symbols on equipment

The following symbols may be placed on equipment to indicate the presence of potentially hazardous conditions.



This symbol indicates the presence of hazardous energy circuits or electric shock hazards. Refer all servicing to qualified personnel.

WARNING: To reduce the risk of injury from electric shock hazards, do not open this enclosure. Refer all maintenance, upgrades, and servicing to qualified personnel.



This symbol indicates the presence of electric shock hazards. The area contains no user or field serviceable parts. Do not open for any reason.

WARNING: To reduce the risk of injury from electric shock hazards, do not open this enclosure.



This symbol on an RJ-45 receptacle indicates a network interface connection.

WARNING: To reduce the risk of electric shock, fire, or damage to the equipment, do not plug telephone or telecommunications connectors into this receptacle.

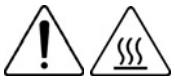

This symbol indicates the presence of a hot surface or hot component. If this surface is contacted, the potential for injury exists.

WARNING: To reduce the risk of injury from a hot component, allow the surface to cool before touching.



63.5 kg
140 lb

This symbol indicates that the component exceeds the recommended weight for one individual to handle safely.

WARNING: To reduce the risk of personal injury or damage to the equipment, observe local occupational health and safety requirements and guidelines for manual material handling.



These symbols, on power supplies or systems, indicate that the equipment is supplied by multiple sources of power.

WARNING: To reduce the risk of injury from electric shock, remove all power cords to completely disconnect power from the system.

Warnings and cautions

WARNING: Only authorized technicians trained by HP should attempt to repair this equipment. All troubleshooting and repair procedures are detailed to allow only subassembly/module-level repair. Because of the complexity of the individual boards and subassemblies, no one should attempt to make repairs at the component level or to make modifications to any printed wiring board. Improper repairs can create a safety hazard.

WARNING: To reduce the risk of personal injury or damage to the equipment, be sure that:

- The leveling feet are extended to the floor.
- The full weight of the rack rests on the leveling feet.
- The stabilizing feet are attached to the rack if it is a single-rack installation.
- The racks are coupled together in multiple-rack installations.
- Only one component is extended at a time. A rack may become unstable if more than one component is extended for any reason.

WARNING: To reduce the risk of electric shock or damage to the equipment:

- Do not disable the power cord grounding plug. The grounding plug is an important safety feature.
- Plug the power cord into a grounded (earthed) electrical outlet that is easily accessible at all times.
- Unplug the power cord from the power supply to disconnect power to the equipment.
- Do not route the power cord where it can be walked on or pinched by items placed against it. Pay particular attention to the plug, electrical outlet, and the point where the cord extends from the server.



63.5 kg
140 lb

WARNING: To reduce the risk of personal injury or damage to the equipment:

- Observe local occupation health and safety requirements and guidelines for manual handling.
- Obtain adequate assistance to lift and stabilize the chassis during installation or removal.
- The server is unstable when not fastened to the rails.
- When mounting the server in a rack, remove the power supplies and any other removable module to reduce the overall weight of the product.

CAUTION: To properly ventilate the system, you must provide at least 7.6 cm (3.0 in) of clearance at the front and back of the server.

CAUTION: The server is designed to be electrically grounded (earthed). To ensure proper operation, plug the AC power cord into a properly grounded AC outlet only.

Symptom information

Before troubleshooting a server problem, collect the following information:

- What events preceded the failure? After which steps does the problem occur?
- What has been changed since the time the server was working?
- Did you recently add or remove hardware or software? If so, did you remember to change the appropriate settings in the server setup utility, if necessary?
- How long has the server exhibited problem symptoms?
- If the problem occurs randomly, what is the duration or frequency?

To answer these questions, the following information may be useful:

- Run HP Insight Diagnostics (on page 62) and use the survey page to view the current configuration or to compare it to previous configurations.
- Refer to your hardware and software records for information.
- Refer to server LEDs and their statuses.

Prepare the server for diagnosis

1. Be sure the server is in the proper operating environment with adequate power, air conditioning, and humidity control. For required environmental conditions, see the server documentation.
2. Record any error messages displayed by the system.
3. Remove all diskettes, CD-ROMs, DVD-ROMs, and USB drive keys.
4. Power down the server and peripheral devices if you will be diagnosing the server offline. If possible, always perform an orderly shutdown:
   a. Exit any applications.
   b. Exit the operating system.
   c. Power down the server (on page 27).
5. Disconnect any peripheral devices not required for testing (any devices not necessary to power up the server). Do not disconnect the printer if you want to use it to print error messages.
6. Collect all tools and utilities, such as a Torx screwdriver, loopback adapters, ESD wrist strap, and software utilities, necessary to troubleshoot the problem.
   - You must have the appropriate Health Drivers and Management Agents installed on the server.

     To verify the server configuration, connect to the System Management homepage and select **Version Control Agent**. The VCA gives you a list of names and versions of all installed HP drivers, Management Agents, and utilities, and whether they are up-to-date.
   - HP recommends you have access to the server documentation for server-specific information.
   - HP recommends you have access to the SmartStart CD for value-added software and drivers required during the troubleshooting process. Download the current version of SmartStart from the HP website (http://www.hp.com/servers/smartstart).

Loose connections

Action:

- Be sure all power cords are securely connected.
- Be sure all cables are properly aligned and securely connected for all external and internal components.
- Remove and check all data and power cables for damage. Be sure no cables have bent pins or damaged connectors.
- If a fixed cable tray is available for the server, be sure the cords and cables connected to the server are routed correctly through the tray.
- Be sure each device is properly seated. Avoid bending or flexing circuit boards when reseating components.
- If a device has latches, be sure they are completely closed and locked.
- Check any interlock or interconnect LEDs that may indicate a component is not connected properly.
- If problems continue to occur, remove and reinstall each device, checking the connectors and sockets for bent pins or other damage.

Service notifications

To view the latest service notifications, refer to the HP website (http://www.hp.com/go/bizsupport). Select the appropriate server model, and then click the **Troubleshoot a Problem** link on the product page.

Troubleshooting flowcharts

To effectively troubleshoot a problem, HP recommends that you start with the first flowchart in this section, "Start diagnosis flowchart (on page 69)," and follow the appropriate diagnostic path. If the other flowcharts do not provide a troubleshooting solution, follow the diagnostic steps in "General diagnosis flowchart (on page 70)." The General diagnosis flowchart is a generic troubleshooting process to be used when the problem is not server-specific or is not easily categorized into the other flowcharts.

The available flowcharts include:

- Start diagnosis flowchart (on page 69)
- General diagnosis flowchart (on page 70)
- Server power-on problems flowchart (on page 72)
- POST problems flowchart (on page 75)
- OS boot problems flowchart (on page 76)
- Server fault indications flowchart (on page 78)

Start diagnosis flowchart

Use the following flowchart to start the diagnostic process.

Item	Refer to
1	"General diagnosis flowchart (on page 70)"
2	"Power-on problems flowchart ("Server power-on problems flowchart" on page 72)"
3	"POST problems flowchart (on page 75)"
4	"OS boot problems flowchart (on page 76)"
5	"Server fault indications flowchart (on page 78)"

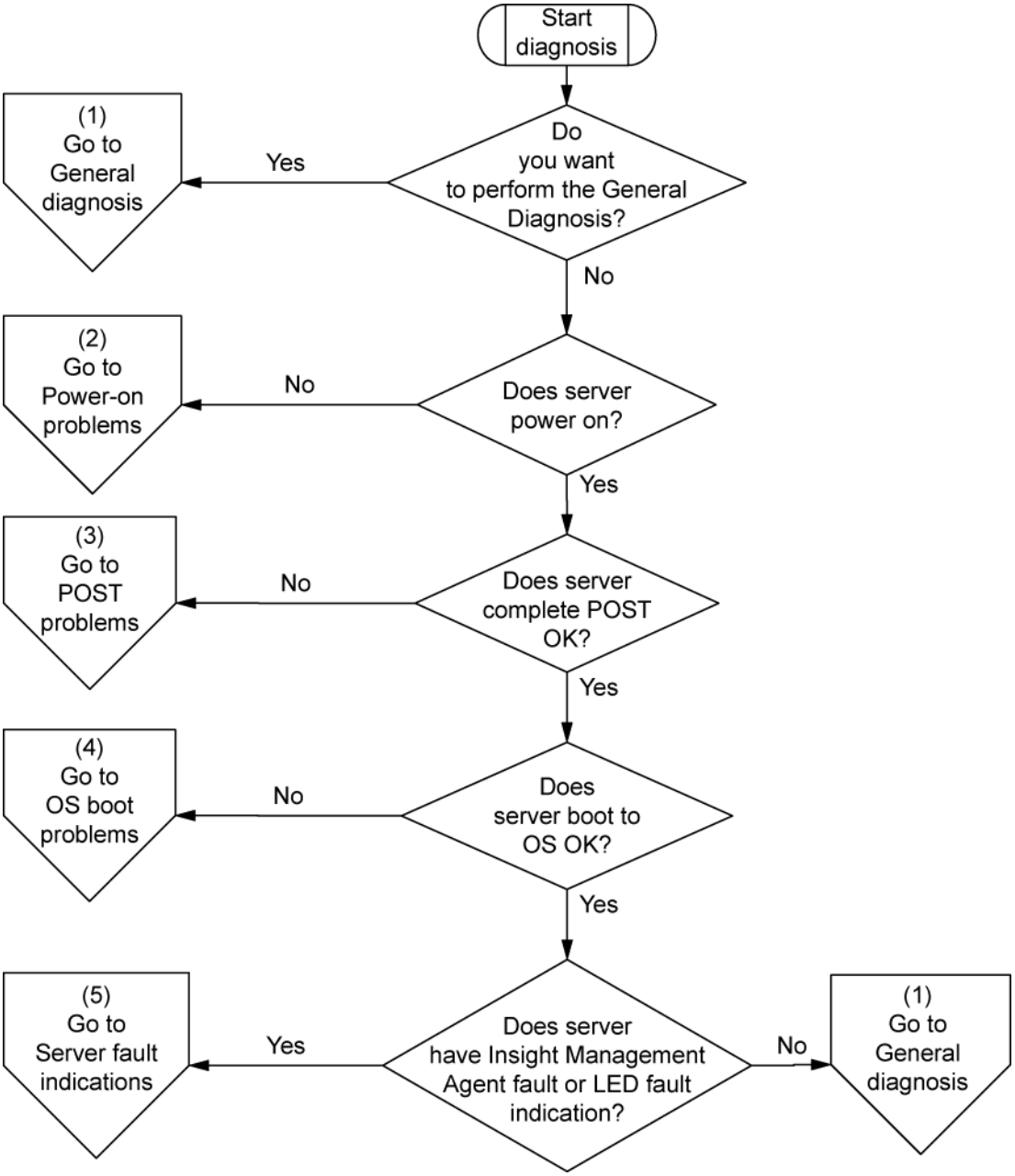

General diagnosis flowchart

The General diagnosis flowchart provides a generic approach to troubleshooting. If you are unsure of the problem, or if the other flowcharts do not fix the problem, use the following flowchart.

Item	Refer to
1	"Symptom information (on page 67)"
2	"Loose connections (on page 68)"
3	"Service notifications (on page 69)"
4	The most recent version of a particular server or option firmware is available on the HP Support website (http://www.hp.com/support).
5	"General memory problems are occurring" in the *HP ProLiant Servers*

Item	Refer to
	Troubleshooting Guide located on the Documentation CD or on the HP website (http://www.hp.com/support)
6	Server maintenance and service guide, located on the Documentation CD or the HP website (http://www.hp.com/products/servers/platforms)
7	• Server maintenance and service guide, located on the Documentation CD or the HP website (http://www.hp.com/products/servers/platforms) • "Hardware problems" in the *HP ProLiant Servers Troubleshooting Guide* located on the Documentation CD or on the HP website (http://www.hp.com/support)
8	• "Server information you need" in the *HP ProLiant Servers Troubleshooting Guide* located on the Documentation CD or on the HP website (http://www.hp.com/support) • "Operating system information you need" in the *HP ProLiant Servers Troubleshooting Guide* located on the Documentation CD or on the HP website (http://www.hp.com/support)
9	"HP contact information (on page 90)"

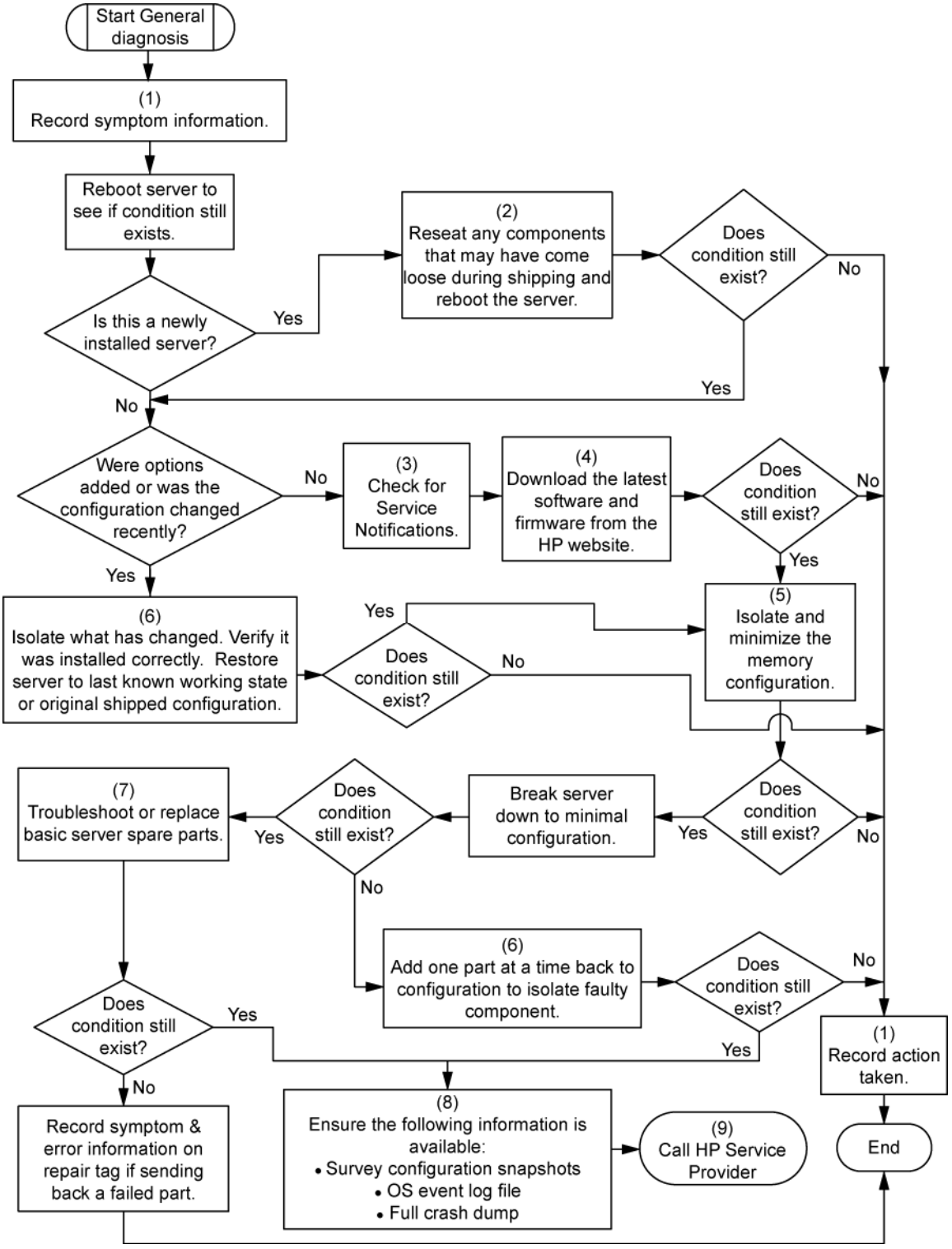

Server power-on problems flowchart

Symptoms:

- The server does not power on.
- The system power LED ("Systems Insight Display LEDs" on page 16) is off or amber.

- The external health LED ("Systems Insight Display LEDs" on page 16) is red or amber.
- The internal health LED ("Systems Insight Display LEDs" on page 16) is red or amber.

NOTE: For the location of server LEDs and information on their statuses, refer to the server documentation.

Possible causes:

- Improperly seated or faulty power supply
- Loose or faulty power cord
- Power source problem
- Power on circuit problem
- Improperly seated component or interlock problem ("Systems Insight Display LEDs" on page 16)
- Faulty internal component

Item	Refer to
1	"Component identification (on page 6)"
2	"HP Insight Diagnostics (on page 62)" or in the *HP ProLiant Servers Troubleshooting Guide* located on the Documentation CD or on the HP website (http://www.hp.com/support)
3	"Loose connections (on page 68)"
4	Server maintenance and service guide, located on the Documentation CD, or the HP website (http://www.hp.com/products/servers/platforms)
5	"Integrated Management Log (on page 62)" or in the *HP ProLiant Servers Troubleshooting Guide* located on the Documentation CD or on the HP website (http://www.hp.com/support)
6	"Power source problems" in the *HP ProLiant Servers Troubleshooting Guide* located on the Documentation CD or on the HP website (http://www.hp.com/support)
7	• "Power supply problems" in the *HP ProLiant Servers Troubleshooting Guide* located on the Documentation CD or on the HP website (http://www.hp.com/support) • Server maintenance and service guide, located on the Documentation CD, or the HP website (http://www.hp.com/products/servers/platforms)
8	"System open circuits and short circuits" in the *HP ProLiant Servers Troubleshooting Guide* located on the Documentation CD or on the HP website (http://www.hp.com/support)

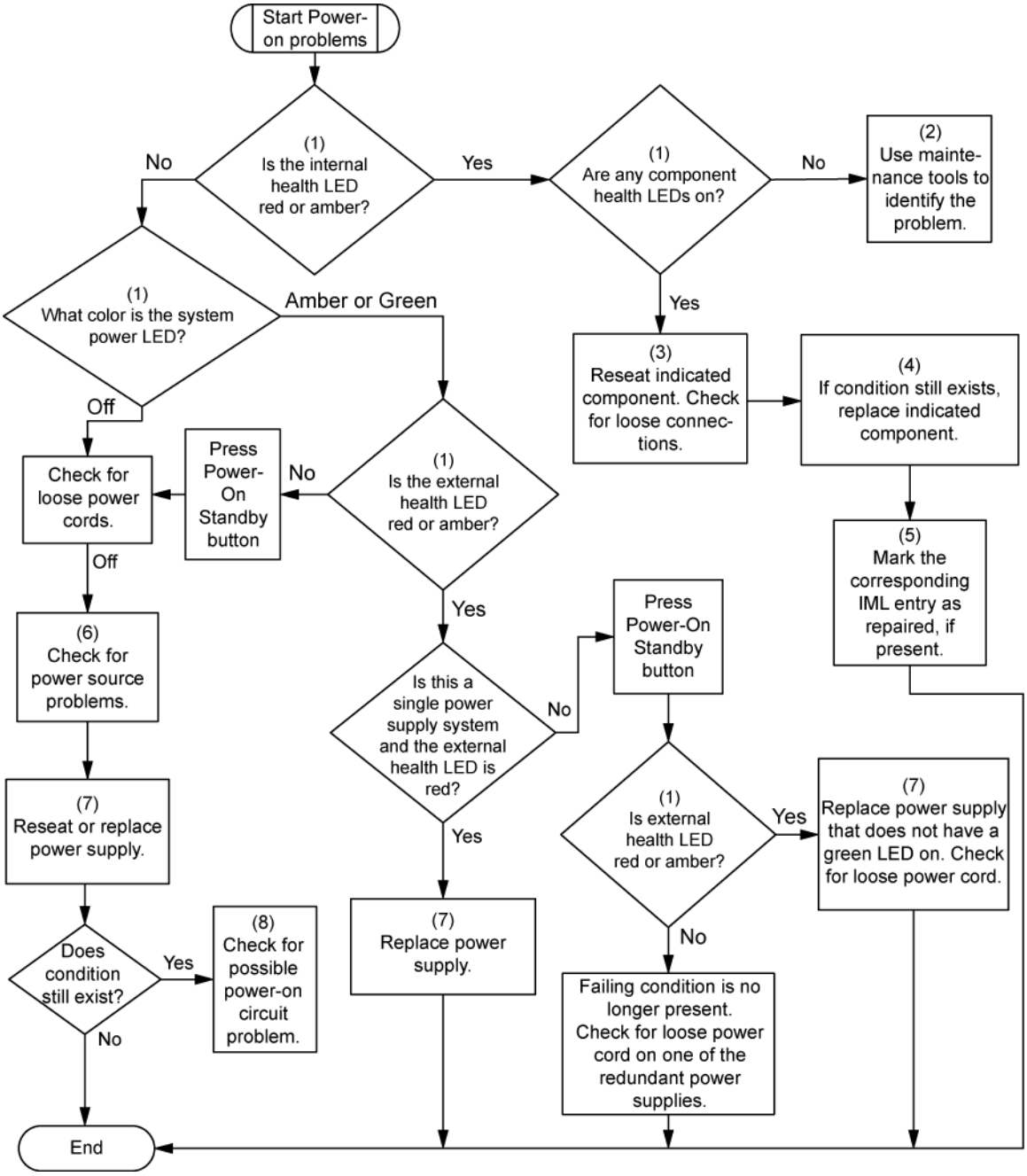
Start Power-on problems
(1) Is the internal health LED red or amber?
No
Yes
(1) Are any component health LEDs on?
No
(2) Use maintenance tools to identify the problem.
Yes
(1) What color is the system power LED?
Amber or Green
Off
(3) Reseat indicated component. Check for loose connections.
(4) If condition still exists, replace indicated component.
(5) Mark the corresponding IML entry as repaired, if present.
(1) Is the external health LED red or amber?
No
Press Power-On Standby button
Check for loose power cords.
Off
Yes
(6) Check for power source problems.
Is this a single power supply system and the external health LED is red?
No
Press Power-On Standby button
(7) Reseat or replace power supply.
Yes
(7) Replace power supply.
(1) Is external health LED red or amber?
Yes
(7) Replace power supply that does not have a green LED on. Check for loose power cord.
No
Does condition still exist?
Yes
(8) Check for possible power-on circuit problem.
No
Failing condition is no longer present. Check for loose power cord on one of the redundant power supplies.
End

POST problems flowchart

Symptoms:

- Server does not complete POST

  NOTE: The server has completed POST when the system attempts to access the boot device.

- Server completes POST with errors

Possible problems:

- Improperly seated or faulty internal component
- Faulty KVM device
- Faulty video device

Item	Refer to
1	"POST error messages and beep codes (on page 80)"
2	"Video problems" in the *HP ProLiant Servers Troubleshooting Guide* located on the Documentation CD or on the HP website (http://www.hp.com/support)
3	KVM or iLO 2 documentation
4	"Loose connections (on page 68)"
5	"Symptom information (on page 67)"
6	Server maintenance and service guide, located on the Documentation CD or the HP website (http://www.hp.com/products/servers/platforms)
7	"Port 85 and iLO messages" in the *HP ProLiant Servers Troubleshooting Guide* located on the Documentation CD or on the HP website (http://www.hp.com/support)
8	"General memory problems are occurring" in the *HP ProLiant Servers Troubleshooting Guide* located on the Documentation CD or on the HP website (http://www.hp.com/support)
9	• "Hardware problems" in the *HP ProLiant Servers Troubleshooting Guide* located on the Documentation CD or on the HP website (http://www.hp.com/support) • Server maintenance and service guide, located on the Documentation CD or the HP website (http://www.hp.com/products/servers/platforms)
10	• "Server information you need" in the *HP ProLiant Servers Troubleshooting Guide* located on the Documentation CD or on the HP website (http://www.hp.com/support) • "Operating system information you need" in the *HP ProLiant Servers Troubleshooting Guide* located on the Documentation CD or on the HP website (http://www.hp.com/support)

Item	Refer to

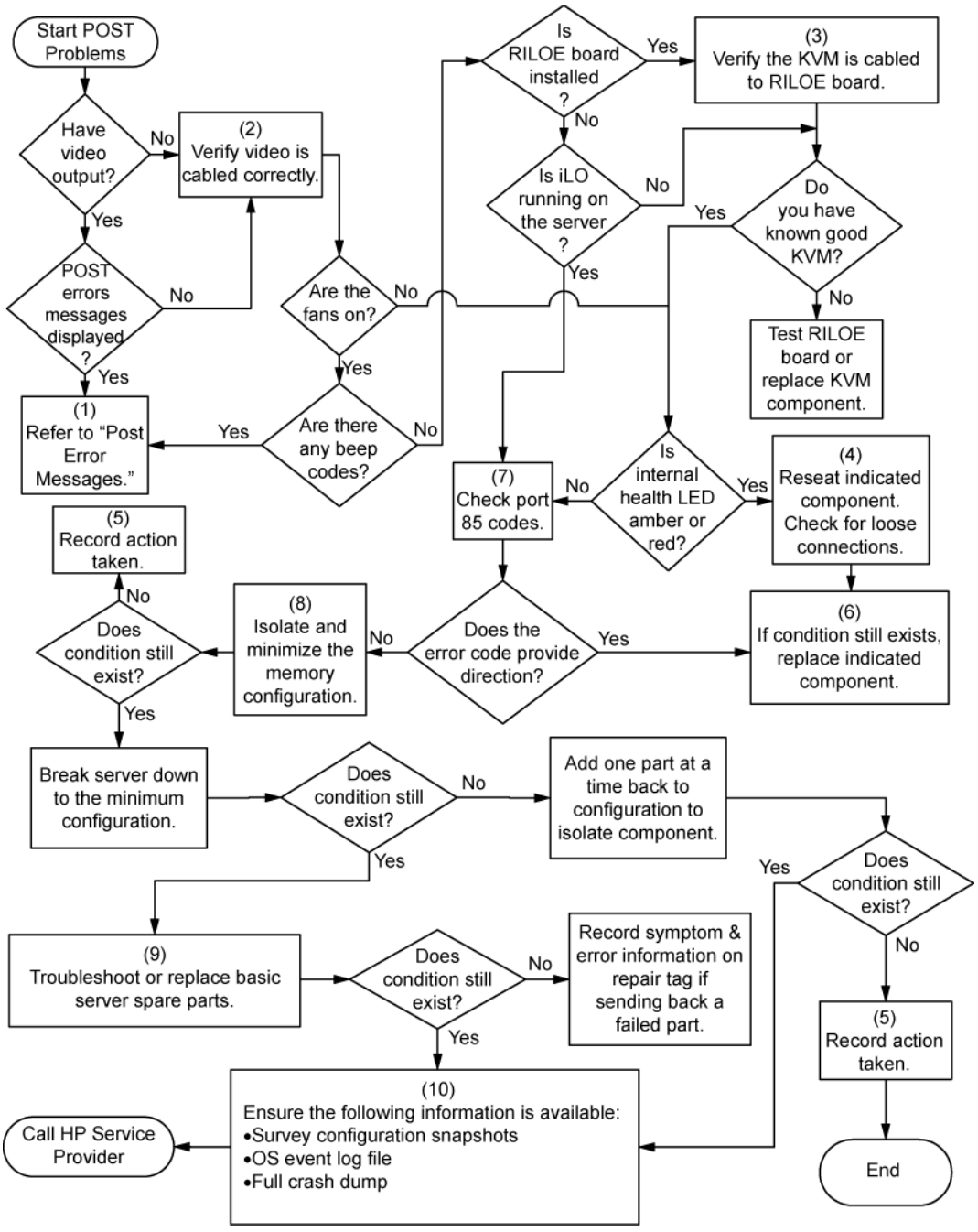

OS boot problems flowchart

Symptoms:

- Server does not boot a previously installed operating system

- Server does not boot SmartStart

Possible causes:

- Corrupted operating system
- Hard drive subsystem problem
- Incorrect boot order setting in RBSU

Item	Refer to
1	*HP ROM-Based Setup Utility User Guide* (http://www.hp.com/servers/smartstart)
2	"POST problems flowchart (on page 75)"
3	• "Hard drive problems" in the *HP ProLiant Servers Troubleshooting Guide* located on the Documentation CD or on the HP website (http://www.hp.com/support) • Controller documentation
4	"HP Insight Diagnostics (on page 62)" or in the *HP ProLiant Servers Troubleshooting Guide* located on the Documentation CD or on the HP website (http://www.hp.com/support)
5	• "CD-ROM and DVD drive problems" in the *HP ProLiant Servers Troubleshooting Guide* located on the Documentation CD or on the HP website (http://www.hp.com/support) • Controller documentation • "Loose connections (on page 68)"
6	"General memory problems are occurring" in the *HP ProLiant Servers Troubleshooting Guide* located on the Documentation CD or on the HP website (http://www.hp.com/support)
7	• "Operating system problems" in the *HP ProLiant Servers Troubleshooting Guide* located on the Documentation CD or on the HP website (http://www.hp.com/support) • "HP contact information (on page 90)"
8	• "Hardware problems" in the *HP ProLiant Servers Troubleshooting Guide* located on the Documentation CD or on the HP website (http://www.hp.com/support) • Server maintenance and service guide, located on the Documentation CD or the HP website (http://www.hp.com/products/servers/platforms)
9	"General diagnosis flowchart (on page 70)"

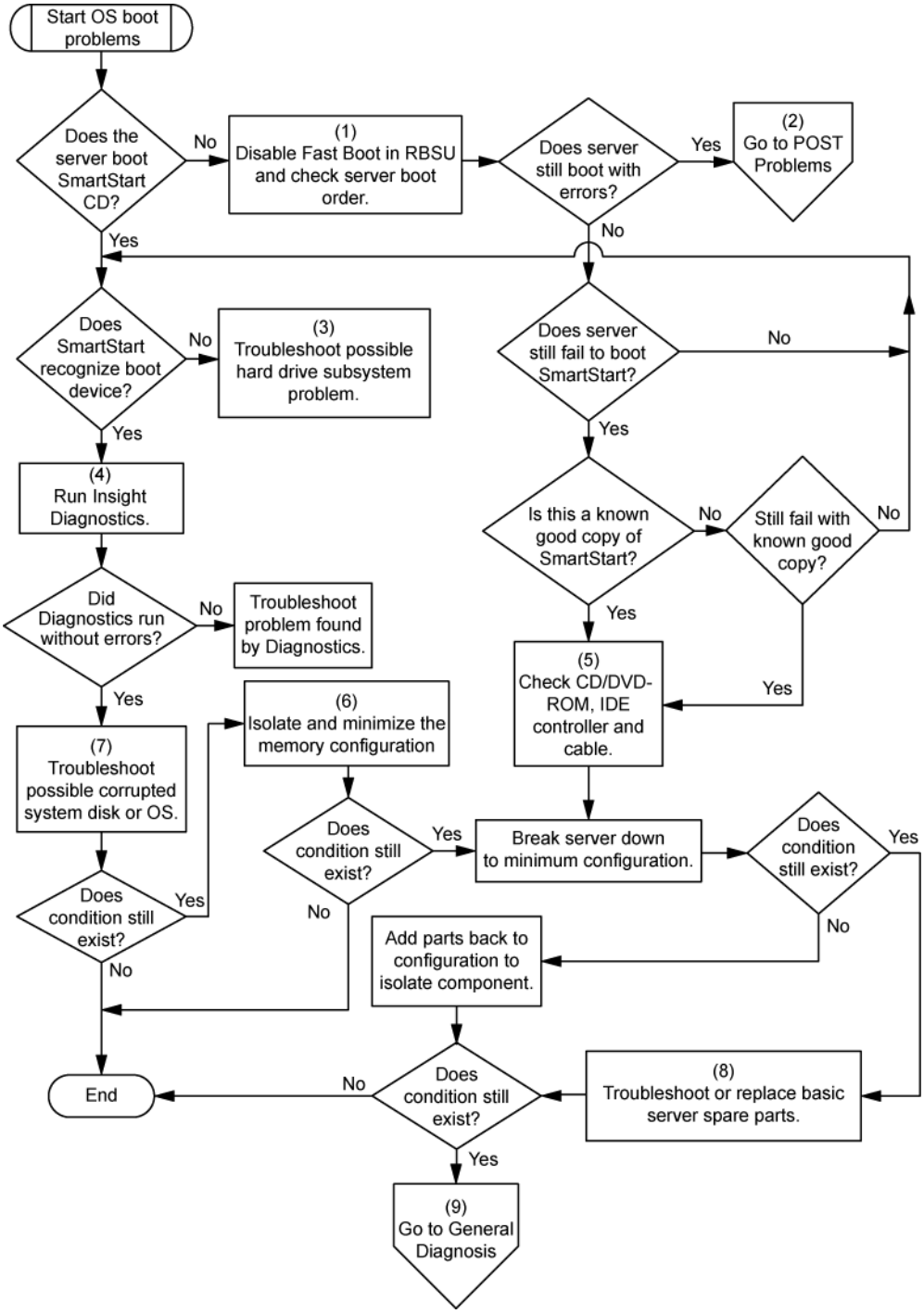

Server fault indications flowchart

Symptoms:

- Server boots, but a fault event is reported by Insight Management Agents (on page 60)
- Server boots, but the internal health LED, external health LED, or component health LED is red or amber

NOTE: For the location of server LEDs and information on their statuses, refer to the server documentation.

Possible causes:

- Improperly seated or faulty internal or external component
- Unsupported component installed
- Redundancy failure
- System overtemperature condition

Item	Refer to
1	"Management agents (on page 60)" or in the *HP ProLiant Servers Troubleshooting Guide* located on the Documentation CD or on the HP website (http://www.hp.com/support)
2	• "Integrated Management Log (on page 62)" or in the *HP ProLiant Servers Troubleshooting Guide* located on the Documentation CD or on the HP website (http://www.hp.com/support) • "Event list error messages" in the *HP ProLiant Servers Troubleshooting Guide* located on the Documentation CD or on the HP website (http://www.hp.com/support)
3	"Component identification (on page 6)"
4	System Management Homepage (https://localhost:2381)
5	"Power-on problems flowchart ("Server power-on problems flowchart" on page 72)"
6	• "Smart Array SCSI Diagnosis feature" in the *HP ProLiant Servers Troubleshooting Guide* located on the Documentation CD or on the HP website (http://www.hp.com/support) • Server maintenance and service guide, located on the Documentation CD or the HP website (http://www.hp.com/products/servers/platforms) • "HP contact information (on page 90)"
7	"HP Insight Diagnostics (on page 62)" or in the *HP ProLiant Servers Troubleshooting Guide* located on the Documentation CD or on the HP website (http://www.hp.com/support)
8	• "Hardware problems" in the *HP ProLiant Servers Troubleshooting Guide* located on the Documentation CD or on the HP website (http://www.hp.com/support) • Server maintenance and service guide, located on the Documentation CD or the HP website (http://www.hp.com/products/servers/platforms)

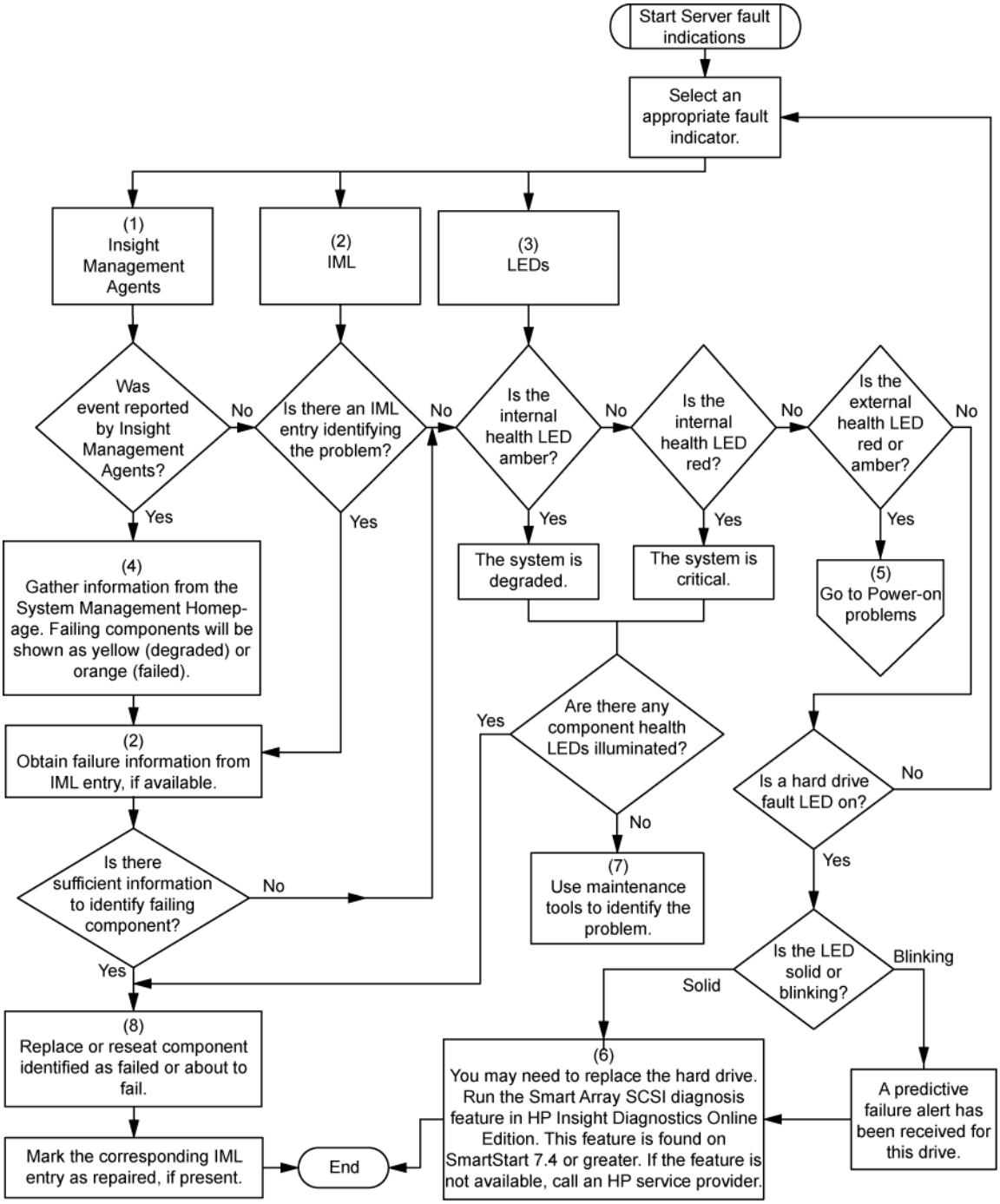

POST error messages and beep codes

For a complete listing of error messages, refer to the "POST error messages" in the *HP ProLiant Servers Troubleshooting Guide* located on the Documentation CD or on the HP website (http://www.hp.com/support).

WARNING: To avoid potential problems, ALWAYS read the warnings and cautionary information in the server documentation before removing, replacing, reseating, or modifying system components.

Regulatory compliance notices

Regulatory compliance identification numbers

For the purpose of regulatory compliance certifications and identification, this product has been assigned a unique regulatory model number. The regulatory model number can be found on the product nameplate label, along with all required approval markings and information. When requesting compliance information for this product, always refer to this regulatory model number. The regulatory model number is not the marketing name or model number of the product.

Federal Communications Commission notice

Part 15 of the Federal Communications Commission (FCC) Rules and Regulations has established Radio Frequency (RF) emission limits to provide an interference-free radio frequency spectrum. Many electronic devices, including computers, generate RF energy incidental to their intended function and are, therefore, covered by these rules. These rules place computers and related peripheral devices into two classes, A and B, depending upon their intended installation. Class A devices are those that may reasonably be expected to be installed in a business or commercial environment. Class B devices are those that may reasonably be expected to be installed in a residential environment (for example, personal computers). The FCC requires devices in both classes to bear a label indicating the interference potential of the device as well as additional operating instructions for the user.

FCC rating label

The FCC rating label on the device shows the classification (A or B) of the equipment. Class B devices have an FCC logo or ID on the label. Class A devices do not have an FCC logo or ID on the label. After you determine the class of the device, refer to the corresponding statement.

Class A equipment

This equipment has been tested and found to comply with the limits for a Class A digital device, pursuant to Part 15 of the FCC Rules. These limits are designed to provide reasonable protection against harmful interference when the equipment is operated in a commercial environment. This equipment generates, uses, and can radiate radio frequency energy and, if not installed and used in accordance with the instructions, may cause harmful interference to radio communications. Operation of this equipment in a residential area is likely to cause harmful interference, in which case the user will be required to correct the interference at personal expense.

Class B equipment

This equipment has been tested and found to comply with the limits for a Class B digital device, pursuant to Part 15 of the FCC Rules. These limits are designed to provide reasonable protection against harmful interference in a residential installation. This equipment generates, uses, and can radiate radio frequency energy and, if not installed and used in accordance with the instructions, may cause harmful interference

to radio communications. However, there is no guarantee that interference will not occur in a particular installation. If this equipment does cause harmful interference to radio or television reception, which can be determined by turning the equipment off and on, the user is encouraged to try to correct the interference by one or more of the following measures:

- Reorient or relocate the receiving antenna.
- Increase the separation between the equipment and receiver.
- Connect the equipment into an outlet on a circuit that is different from that to which the receiver is connected.
- Consult the dealer or an experienced radio or television technician for help.

Declaration of conformity for products marked with the FCC logo, United States only

This device complies with Part 15 of the FCC Rules. Operation is subject to the following two conditions: (1) this device may not cause harmful interference, and (2) this device must accept any interference received, including interference that may cause undesired operation.

For questions regarding this product, contact us by mail or telephone:

- Hewlett-Packard Company
  P. O. Box 692000, Mail Stop 530113
  Houston, Texas 77269-2000
- 1-800-HP-INVENT (1-800-474-6836). (For continuous quality improvement, calls may be recorded or monitored.)

For questions regarding this FCC declaration, contact us by mail or telephone:

- Hewlett-Packard Company
  P. O. Box 692000, Mail Stop 510101
  Houston, Texas 77269-2000
- 1-281-514-3333

To identify this product, refer to the part, series, or model number found on the product.

Modifications

The FCC requires the user to be notified that any changes or modifications made to this device that are not expressly approved by Hewlett-Packard Company may void the user's authority to operate the equipment.

Cables

Connections to this device must be made with shielded cables with metallic RFI/EMI connector hoods in order to maintain compliance with FCC Rules and Regulations.

Canadian notice (Avis Canadien)

Class A equipment

This Class A digital apparatus meets all requirements of the Canadian Interference-Causing Equipment Regulations.

Cet appareil numérique de la classe A respecte toutes les exigences du Règlement sur le matériel brouilleur du Canada.

Class B equipment

This Class B digital apparatus meets all requirements of the Canadian Interference-Causing Equipment Regulations.

Cet appareil numérique de la classe B respecte toutes les exigences du Règlement sur le matériel brouilleur du Canada.

European Union regulatory notice

This product complies with the following EU Directives:

- Low Voltage Directive 2006/95/EC
- EMC Directive 2004/108/EC

Compliance with these directives implies conformity to applicable harmonized European standards (European Norms) which are listed on the EU Declaration of Conformity issued by Hewlett-Packard for this product or product family.

This compliance is indicated by the following conformity marking placed on the product:



This marking is valid for non-Telecom products and EU harmonized Telecom products (e.g. Bluetooth).



This marking is valid for EU non-harmonized Telecom products.

*Notified body number (used only if applicable—refer to the product label)

Hewlett-Packard GmbH, HQ-TRE, Herrenberger Strasse 140, 71034 Boeblingen, Germany

The official EU CE declaration of conformity for this device can be found on the HP website (http://www.hp.com/go/certificates).

Disposal of waste equipment by users in private households in the European Union



This symbol on the product or on its packaging indicates that this product must not be disposed of with your other household waste. Instead, it is your responsibility to dispose of your waste equipment by handing it over to a designated collection point for the recycling of waste electrical and electronic equipment. The separate collection and recycling of your waste equipment at the time of disposal will help to conserve natural resources and ensure that it is recycled in a manner that protects human health and the environment. For more information about where you can drop off your waste equipment for recycling, please contact your local city office, your household waste disposal service or the shop where you purchased the product.

Japanese notice

JAPANESE NOTICE

ご使用になっている装置に VCCI マークが付いていましたら、次の説明文をお読み下さい。

この装置は、クラス B 情報技術装置です。この装置は、家庭環境で使用することを目的としていますが、この装置がラジオやテレビジョン受信機に近接して使用されると、受信障害を引き起こすことがあります。取扱説明書に従って正しい取り扱いをして下さい。

VCCI-B

VCCI マークが付いていない場合には、次の点にご注意下さい。

この装置は、クラス A 情報技術装置です。この装置を家庭環境で使用すると電波妨害を引き起こすことがあります。この場合には使用者は適切な対策を講ずるよう要求されることがあります。

VCCI-A

April 1, 2009

BSMI notice

警告使用者:

這是甲類的資訊產品，在居住的
環境中使用時，可能會造成射頻
干擾，在這種情況下，使用者會
被要求採取某些適當的對策。

Korean notice

Class A equipment

A급 기기 (업무용 방송통신기기)	이 기기는 업무용(A급)으로 전자파적합등록을 한 기기이오니 판매자 또는 사용자는 이 점을 주의하시기 바라며, 가정 외의 지역에서 사용하는 것을 목적으로 합니다.

Class B equipment

B급 기기 (가정용 방송통신기기)	이 기기는 가정용(B급)으로 전자파적합등록을 한 기기로서 주로 가정에서 사용하는 것을 목적으로 하며, 모든 지역에서 사용할 수 있습니다.

Laser compliance

This product may be provided with an optical storage device (that is, CD or DVD drive) and/or fiber optic transceiver. Each of these devices contains a laser that is classified as a Class 1 Laser Product in accordance with US FDA regulations and the IEC 60825-1. The product does not emit hazardous laser radiation.

Each laser product complies with 21 CFR 1040.10 and 1040.11 except for deviations pursuant to Laser Notice No. 50, dated May 27, 2001; and with IEC 60825-1:1993/A2:2001.

⚠ **WARNING:** Use of controls or adjustments or performance of procedures other than those specified herein or in the laser product's installation guide may result in hazardous radiation exposure. To reduce the risk of exposure to hazardous radiation:

- Do not try to open the module enclosure. There are no user-serviceable components inside.
- Do not operate controls, make adjustments, or perform procedures to the laser device other than those specified herein.
- Allow only HP Authorized Service technicians to repair the unit.

The Center for Devices and Radiological Health (CDRH) of the U.S. Food and Drug Administration implemented regulations for laser products on August 2, 1976. These regulations apply to laser products manufactured from August 1, 1976. Compliance is mandatory for products marketed in the United States.

Battery replacement notice

⚠ **WARNING:** The computer contains an internal lithium manganese dioxide, a vanadium pentoxide, or an alkaline battery pack. A risk of fire and burns exists if the battery pack is not properly handled. To reduce the risk of personal injury:

- Do not attempt to recharge the battery.
- Do not expose the battery to temperatures higher than 60°C (140°F).
- Do not disassemble, crush, puncture, short external contacts, or dispose of in fire or water.



Batteries, battery packs, and accumulators should not be disposed of together with the general household waste. To forward them to recycling or proper disposal, use the public collection system or return them to HP, an authorized HP Partner, or their agents.

For more information about battery replacement or proper disposal, contact an authorized reseller or an authorized service provider.

Taiwan battery recycling notice

The Taiwan EPA requires dry battery manufacturing or importing firms in accordance with Article 15 of the Waste Disposal Act to indicate the recovery marks on the batteries used in sales, giveaway or promotion. Contact a qualified Taiwanese recycler for proper battery disposal.



Power cord statement for Japan

製品には、同梱された電源コードをお使い下さい。
同梱された電源コードは、他の製品では使用出来ません。

Electrostatic discharge

Preventing electrostatic discharge

To prevent damaging the system, be aware of the precautions you need to follow when setting up the system or handling parts. A discharge of static electricity from a finger or other conductor may damage system boards or other static-sensitive devices. This type of damage may reduce the life expectancy of the device.

To prevent electrostatic damage:

- Avoid hand contact by transporting and storing products in static-safe containers.
- Keep electrostatic-sensitive parts in their containers until they arrive at static-free workstations.
- Place parts on a grounded surface before removing them from their containers.
- Avoid touching pins, leads, or circuitry.
- Always be properly grounded when touching a static-sensitive component or assembly.

Grounding methods to prevent electrostatic discharge

Several methods are used for grounding. Use one or more of the following methods when handling or installing electrostatic-sensitive parts:

- Use a wrist strap connected by a ground cord to a grounded workstation or computer chassis. Wrist straps are flexible straps with a minimum of 1 megohm ±10 percent resistance in the ground cords. To provide proper ground, wear the strap snug against the skin.
- Use heel straps, toe straps, or boot straps at standing workstations. Wear the straps on both feet when standing on conductive floors or dissipating floor mats.
- Use conductive field service tools.
- Use a portable field service kit with a folding static-dissipating work mat.

If you do not have any of the suggested equipment for proper grounding, have an authorized reseller install the part.

For more information on static electricity or assistance with product installation, contact an authorized reseller.

Specifications

Environmental specifications

Specification	Value
Temperature range*	
Operating	10°C to 35°C (50°F to 95°F)
Shipping	-40°C to 70°C (-40°F to 158°F)
Maximum wet bulb temperature	28°C (82.4°F)
Relative humidity (noncondensing)**	
Operating	10% to 90%
Non-operating	5% to 95%

* All temperature ratings shown are for sea level. An altitude derating of 1°C per 300 m (1.8°F per 1,000 ft) to 3048 m (10,000 ft) is applicable. No direct sunlight allowed.
** Storage maximum humidity of 95% is based on a maximum temperature of 45°C (113°F). Altitude maximum for storage corresponds to a pressure minimum of 70 kPa.

Server specifications

Specification	Value
Dimension	
Height	17.6 cm (6.94 in)
Depth	67.3 cm (26.5 in)
Width	48.3 cm (19.0 in)
Maximum weight (all hard drives, power supplies, and processors installed)	43 kg (95 lb)
Minimum weight (one hard drive, one power supply, and one processor installed)	36 kg (79 lb)
Input requirement	
Rated input voltage	100-127 VAC 200-240 VAC
Rated input frequency	50-60 Hz
Rated input current	@ 100 VAC–12A @ 200 VAC–8A
Rated input power	@100 VAC–1161 W @200 VAC–1598 W

Specification	Value
BTUs per hour	@100 VAC–3960 BTU @200 VAC–5450 BTU
Power supply output	
Power supply output	910 W (low line) 1300 W (high line)

Technical support

Before you contact HP

Be sure to have the following information available before you call HP:

- Technical support registration number (if applicable)
- Product serial number
- Product model name and number
- Product identification number
- Applicable error messages
- Add-on boards or hardware
- Third-party hardware or software
- Operating system type and revision level

HP contact information

For the name of the nearest HP authorized reseller:

- See the Contact HP worldwide (in English) webpage (http://welcome.hp.com/country/us/en/wwcontact.html).

For HP technical support:

- In the United States, for contact options see the Contact HP United States webpage (http://welcome.hp.com/country/us/en/contact_us.html). To contact HP by phone:
  - Call 1-800-HP-INVENT (1-800-474-6836). This service is available 24 hours a day, 7 days a week. For continuous quality improvement, calls may be recorded or monitored.
  - If you have purchased a Care Pack (service upgrade), call 1-800-633-3600. For more information about Care Packs, refer to the HP website (http://www.hp.com/hps).
- In other locations, see the Contact HP worldwide (in English) webpage (http://welcome.hp.com/country/us/en/wwcontact.html).

Customer Self Repair

HP products are designed with many Customer Self Repair (CSR) parts to minimize repair time and allow for greater flexibility in performing defective parts replacement. If during the diagnosis period HP (or HP service providers or service partners) identifies that the repair can be accomplished by the use of a CSR part, HP will ship that part directly to you for replacement. There are two categories of CSR parts:

- **Mandatory**—Parts for which customer self repair is mandatory. If you request HP to replace these parts, you will be charged for the travel and labor costs of this service.

- **Optional**—Parts for which customer self repair is optional. These parts are also designed for customer self repair. If, however, you require that HP replace them for you, there may or may not be additional charges, depending on the type of warranty service designated for your product.

NOTE: Some HP parts are not designed for customer self repair. In order to satisfy the customer warranty, HP requires that an authorized service provider replace the part. These parts are identified as "No" in the Illustrated Parts Catalog.

Based on availability and where geography permits, CSR parts will be shipped for next business day delivery. Same day or four-hour delivery may be offered at an additional charge where geography permits. If assistance is required, you can call the HP Technical Support Center and a technician will help you over the telephone. HP specifies in the materials shipped with a replacement CSR part whether a defective part must be returned to HP. In cases where it is required to return the defective part to HP, you must ship the defective part back to HP within a defined period of time, normally five (5) business days. The defective part must be returned with the associated documentation in the provided shipping material. Failure to return the defective part may result in HP billing you for the replacement. With a customer self repair, HP will pay all shipping and part return costs and determine the courier/carrier to be used.

For more information about HP's Customer Self Repair program, contact your local service provider. For the North American program, refer to the HP website (http://www.hp.com/go/selfrepair).

Réparation par le client (CSR)

Les produits HP comportent de nombreuses pièces CSR (Customer Self Repair = réparation par le client) afin de minimiser les délais de réparation et faciliter le remplacement des pièces défectueuses. Si pendant la période de diagnostic, HP (ou ses partenaires ou mainteneurs agréés) détermine que la réparation peut être effectuée à l'aide d'une pièce CSR, HP vous l'envoie directement. Il existe deux catégories de pièces CSR:

Obligatoire - Pièces pour lesquelles la réparation par le client est obligatoire. Si vous demandez à HP de remplacer ces pièces, les coûts de déplacement et main d'œuvre du service vous seront facturés.

Facultatif - Pièces pour lesquelles la réparation par le client est facultative. Ces pièces sont également conçues pour permettre au client d'effectuer lui-même la réparation. Toutefois, si vous demandez à HP de remplacer ces pièces, l'intervention peut ou non vous être facturée, selon le type de garantie applicable à votre produit.

REMARQUE: Certaines pièces HP ne sont pas conçues pour permettre au client d'effectuer lui-même la réparation. Pour que la garantie puisse s'appliquer, HP exige que le remplacement de la pièce soit effectué par un Mainteneur Agréé. Ces pièces sont identifiées par la mention "Non" dans le Catalogue illustré.

Les pièces CSR sont livrées le jour ouvré suivant, dans la limite des stocks disponibles et selon votre situation géographique. Si votre situation géographique le permet et que vous demandez une livraison le jour même ou dans les 4 heures, celle-ci vous sera facturée. Pour bénéficier d'une assistance téléphonique, appelez le Centre d'assistance technique HP. Dans les documents envoyés avec la pièce de rechange CSR, HP précise s'il est nécessaire de lui retourner la pièce défectueuse. Si c'est le cas, vous devez le faire dans le délai indiqué, généralement cinq (5) jours ouvrés. La pièce et sa documentation doivent être retournées dans l'emballage fourni. Si vous ne retournez pas la pièce défectueuse, HP se réserve le droit de vous facturer les coûts de remplacement. Dans le cas d'une pièce CSR, HP supporte l'ensemble des frais d'expédition et de retour, et détermine la société de courses ou le transporteur à utiliser.

Pour plus d'informations sur le programme CSR de HP, contactez votre Mainteneur Agrée local. Pour plus d'informations sur ce programme en Amérique du Nord, consultez le site Web HP (http://www.hp.com/go/selfrepair).

Riparazione da parte del cliente

Per abbreviare i tempi di riparazione e garantire una maggiore flessibilità nella sostituzione di parti difettose, i prodotti HP sono realizzati con numerosi componenti che possono essere riparati direttamente dal cliente (CSR, Customer Self Repair). Se in fase di diagnostica HP (o un centro di servizi o di assistenza HP) identifica il guasto come riparabile mediante un ricambio CSR, HP lo spedirà direttamente al cliente per la sostituzione. Vi sono due categorie di parti CSR:

Obbligatorie – Parti che devono essere necessariamente riparate dal cliente. Se il cliente ne affida la riparazione ad HP, deve sostenere le spese di spedizione e di manodopera per il servizio.

Opzionali – Parti la cui riparazione da parte del cliente è facoltativa. Si tratta comunque di componenti progettati per questo scopo. Se tuttavia il cliente ne richiede la sostituzione ad HP, potrebbe dover sostenere spese addizionali a seconda del tipo di garanzia previsto per il prodotto.

NOTA: alcuni componenti HP non sono progettati per la riparazione da parte del cliente. Per rispettare la garanzia, HP richiede che queste parti siano sostituite da un centro di assistenza autorizzato. Tali parti sono identificate da un "No" nel Catalogo illustrato dei componenti.

In base alla disponibilità e alla località geografica, le parti CSR vengono spedite con consegna entro il giorno lavorativo seguente. La consegna nel giorno stesso o entro quattro ore è offerta con un supplemento di costo solo in alcune zone. In caso di necessità si può richiedere l'assistenza telefonica di un addetto del centro di supporto tecnico HP. Nel materiale fornito con una parte di ricambio CSR, HP specifica se il cliente deve restituire dei componenti. Qualora sia richiesta la resa ad HP del componente difettoso, lo si deve spedire ad HP entro un determinato periodo di tempo, generalmente cinque (5) giorni lavorativi. Il componente difettoso deve essere restituito con la documentazione associata nell'imballo di spedizione fornito. La mancata restituzione del componente può comportare la fatturazione del ricambio da parte di HP. Nel caso di riparazione da parte del cliente, HP sostiene tutte le spese di spedizione e resa e sceglie il corriere/vettore da utilizzare.

Per ulteriori informazioni sul programma CSR di HP contattare il centro di assistenza di zona. Per il programma in Nord America fare riferimento al sito Web HP (http://www.hp.com/go/selfrepair).

Customer Self Repair

HP Produkte enthalten viele CSR-Teile (Customer Self Repair), um Reparaturzeiten zu minimieren und höhere Flexibilität beim Austausch defekter Bauteile zu ermöglichen. Wenn HP (oder ein HP Servicepartner) bei der Diagnose feststellt, dass das Produkt mithilfe eines CSR-Teils repariert werden kann, sendet Ihnen HP dieses Bauteil zum Austausch direkt zu. CSR-Teile werden in zwei Kategorien unterteilt:

Zwingend – Teile, für die das Customer Self Repair-Verfahren zwingend vorgegeben ist. Wenn Sie den Austausch dieser Teile von HP vornehmen lassen, werden Ihnen die Anfahrt- und Arbeitskosten für diesen Service berechnet.

Optional – Teile, für die das Customer Self Repair-Verfahren optional ist. Diese Teile sind auch für Customer Self Repair ausgelegt. Wenn Sie jedoch den Austausch dieser Teile von HP vornehmen lassen möchten, können bei diesem Service je nach den für Ihr Produkt vorgesehenen Garantiebedingungen zusätzliche Kosten anfallen.

HINWEIS: Einige Teile sind nicht für Customer Self Repair ausgelegt. Um den Garantieanspruch des Kunden zu erfüllen, muss das Teil von einem HP Servicepartner ersetzt werden. Im illustrierten Teilekatalog sind diese Teile mit „No“ bzw. „Nein“ gekennzeichnet.

CSR-Teile werden abhängig von der Verfügbarkeit und vom Lieferziel am folgenden Geschäftstag geliefert. Für bestimmte Standorte ist eine Lieferung am selben Tag oder innerhalb von vier Stunden gegen einen Aufpreis verfügbar. Wenn Sie Hilfe benötigen, können Sie das HP technische Support Center anrufen und sich von einem Mitarbeiter per Telefon helfen lassen. Den Materialien, die mit einem CSR-Ersatzteil geliefert werden, können Sie entnehmen, ob das defekte Teil an HP zurückgeschickt werden muss. Wenn es erforderlich ist, das defekte Teil an HP zurückzuschicken, müssen Sie dies innerhalb eines vorgegebenen Zeitraums tun, in der Regel innerhalb von fünf (5) Geschäftstagen. Das defekte Teil muss mit der zugehörigen Dokumentation in der Verpackung zurückgeschickt werden, die im Lieferumfang enthalten ist. Wenn Sie das defekte Teil nicht zurückschicken, kann HP Ihnen das Ersatzteil in Rechnung stellen. Im Falle von Customer Self Repair kommt HP für alle Kosten für die Lieferung und Rücksendung auf und bestimmt den Kurier-/Frachtdienst.

Weitere Informationen über das HP Customer Self Repair Programm erhalten Sie von Ihrem Servicepartner vor Ort. Informationen über das CSR-Programm in Nordamerika finden Sie auf der HP Website unter (http://www.hp.com/go/selfrepair).

Reparaciones del propio cliente

Los productos de HP incluyen muchos componentes que el propio usuario puede reemplazar (*Customer Self Repair*, CSR) para minimizar el tiempo de reparación y ofrecer una mayor flexibilidad a la hora de realizar sustituciones de componentes defectuosos. Si, durante la fase de diagnóstico, HP (o los proveedores o socios de servicio de HP) identifica que una reparación puede llevarse a cabo mediante el uso de un componente CSR, HP le enviará dicho componente directamente para que realice su sustitución. Los componentes CSR se clasifican en dos categorías:

- **Obligatorio:** componentes para los que la reparación por parte del usuario es obligatoria. Si solicita a HP que realice la sustitución de estos componentes, tendrá que hacerse cargo de los gastos de desplazamiento y de mano de obra de dicho servicio.
- **Opcional:** componentes para los que la reparación por parte del usuario es opcional. Estos componentes también están diseñados para que puedan ser reparados por el usuario. Sin embargo, si precisa que HP realice su sustitución, puede o no conllevar costes adicionales, dependiendo del tipo de servicio de garantía correspondiente al producto.

NOTA: Algunos componentes no están diseñados para que puedan ser reparados por el usuario. Para que el usuario haga valer su garantía, HP pone como condición que un proveedor de servicios autorizado realice la sustitución de estos componentes. Dichos componentes se identifican con la palabra "No" en el catálogo ilustrado de componentes.

Según la disponibilidad y la situación geográfica, los componentes CSR se enviarán para que lleguen a su destino al siguiente día laborable. Si la situación geográfica lo permite, se puede solicitar la entrega en el mismo día o en cuatro horas con un coste adicional. Si precisa asistencia técnica, puede llamar al Centro de asistencia técnica de HP y recibirá ayuda telefónica por parte de un técnico. Con el envío de materiales para la sustitución de componentes CSR, HP especificará si los componentes defectuosos deberán devolverse a HP. En aquellos casos en los que sea necesario devolver algún componente a HP, deberá hacerlo en el periodo de tiempo especificado, normalmente cinco días laborables. Los componentes defectuosos deberán devolverse con toda la documentación relacionada y con el embalaje de envío. Si no enviara el componente defectuoso requerido, HP podrá cobrarle por el de sustitución. En

el caso de todas sustituciones que lleve a cabo el cliente, HP se hará cargo de todos los gastos de envío y devolución de componentes y escogerá la empresa de transporte que se utilice para dicho servicio.

Para obtener más información acerca del programa de Reparaciones del propio cliente de HP, póngase en contacto con su proveedor de servicios local. Si está interesado en el programa para Norteamérica, visite la página web de HP siguiente (http://www.hp.com/go/selfrepair).

Customer Self Repair

Veel onderdelen in HP producten zijn door de klant zelf te repareren, waardoor de reparatieduur tot een minimum beperkt kan blijven en de flexibiliteit in het vervangen van defecte onderdelen groter is. Deze onderdelen worden CSR-onderdelen (Customer Self Repair) genoemd. Als HP (of een HP Service Partner) bij de diagnose vaststelt dat de reparatie kan worden uitgevoerd met een CSR-onderdeel, verzendt HP dat onderdeel rechtstreeks naar u, zodat u het defecte onderdeel daarmee kunt vervangen. Er zijn twee categorieën CSR-onderdelen:

Verplicht: Onderdelen waarvoor reparatie door de klant verplicht is. Als u HP verzoekt deze onderdelen voor u te vervangen, worden u voor deze service reiskosten en arbeidsloon in rekening gebracht.

Optioneel: Onderdelen waarvoor reparatie door de klant optioneel is. Ook deze onderdelen zijn ontworpen voor reparatie door de klant. Als u echter HP verzoekt deze onderdelen voor u te vervangen, kunnen daarvoor extra kosten in rekening worden gebracht, afhankelijk van het type garantieservice voor het product.

OPMERKING: Sommige HP onderdelen zijn niet ontwikkeld voor reparatie door de klant. In verband met de garantievoorwaarden moet het onderdeel door een geautoriseerde Service Partner worden vervangen. Deze onderdelen worden in de geïllustreerde onderdelencatalogus aangemerkt met "Nee".

Afhankelijk van de leverbaarheid en de locatie worden CSR-onderdelen verzonden voor levering op de eerstvolgende werkdag. Levering op dezelfde dag of binnen vier uur kan tegen meerkosten worden aangeboden, indien dit mogelijk is gezien de locatie. Indien assistentie gewenst is, belt u een HP Service Partner om via de telefoon technische ondersteuning te ontvangen. HP vermeldt in de documentatie bij het vervangende CSR-onderdeel of het defecte onderdeel aan HP moet worden geretourneerd. Als het defecte onderdeel aan HP moet worden teruggezonden, moet u het defecte onderdeel binnen een bepaalde periode, gewoonlijk vijf (5) werkdagen, retourneren aan HP. Het defecte onderdeel moet met de bijbehorende documentatie worden geretourneerd in het meegeleverde verpakkingsmateriaal. Als u het defecte onderdeel niet terugzendt, kan HP u voor het vervangende onderdeel kosten in rekening brengen. Bij reparatie door de klant betaalt HP alle verzendkosten voor het vervangende en geretourneerde onderdeel en kiest HP zelf welke koerier/transportonderneming hiervoor wordt gebruikt.

Neem contact op met een Service Partner voor meer informatie over het Customer Self Repair programma van HP. Informatie over Service Partners vindt u op de HP website (http://www.hp.com/go/selfrepair).

Reparo feito pelo cliente

Os produtos da HP são projetados com muitas peças para reparo feito pelo cliente (CSR) de modo a minimizar o tempo de reparo e permitir maior flexibilidade na substituição de peças com defeito. Se, durante o período de diagnóstico, a HP (ou fornecedores/parceiros de serviço da HP) concluir que o reparo pode ser efetuado pelo uso de uma peça CSR, a peça de reposição será enviada diretamente ao cliente. Existem duas categorias de peças CSR:

Obrigatória – Peças cujo reparo feito pelo cliente é obrigatório. Se desejar que a HP substitua essas peças, serão cobradas as despesas de transporte e mão-de-obra do serviço.

Opcional – Peças cujo reparo feito pelo cliente é opcional. Essas peças também são projetadas para o reparo feito pelo cliente. No entanto, se desejar que a HP as substitua, pode haver ou não a cobrança de taxa adicional, dependendo do tipo de serviço de garantia destinado ao produto.

OBSERVAÇÃO: Algumas peças da HP não são projetadas para o reparo feito pelo cliente. A fim de cumprir a garantia do cliente, a HP exige que um técnico autorizado substitua a peça. Essas peças estão identificadas com a marca "No" (Não), no catálogo de peças ilustrado.

Conforme a disponibilidade e o local geográfico, as peças CSR serão enviadas no primeiro dia útil após o pedido. Onde as condições geográficas permitirem, a entrega no mesmo dia ou em quatro horas pode ser feita mediante uma taxa adicional. Se precisar de auxílio, entre em contato com o Centro de suporte técnico da HP para que um técnico o ajude por telefone. A HP especifica nos materiais fornecidos com a peça CSR de reposição se a peça com defeito deve ser devolvida à HP. Nos casos em que isso for necessário, é preciso enviar a peça com defeito à HP dentro do período determinado, normalmente cinco (5) dias úteis. A peça com defeito deve ser enviada com a documentação correspondente no material de transporte fornecido. Caso não o faça, a HP poderá cobrar a reposição. Para as peças de reparo feito pelo cliente, a HP paga todas as despesas de transporte e de devolução da peça e determina a transportadora/serviço postal a ser utilizado.

Para obter mais informações sobre o programa de reparo feito pelo cliente da HP, entre em contato com o fornecedor de serviços local. Para o programa norte-americano, visite o site da HP (http://www.hp.com/go/selfrepair).

顧客自己修理保証サービス

修理時間を短縮し、故障部品の交換における高い柔軟性を確保するために、HP製品には多数の顧客自己修理（CSR）部品があります。診断の際に、CSR部品を使用すれば修理ができるとHP（HPまたはHP正規保守代理店）が判断した場合、HPはその部品を直接、お客様に発送し、お客様に交換していただきます。CSR部品には以下の2通りがあります。

- 必須 - 顧客自己修理が必須の部品。当該部品について、もしもお客様がHPに交換作業を依頼される場合には、その修理サービスに関する交通費および人件費がお客様に請求されます。
- 任意 - 顧客自己修理が任意である部品。この部品も顧客自己修理用です。当該部品について、もしもお客様がHPに交換作業を依頼される場合には、お買い上げの製品に適用される保証サービス内容の範囲内においては、別途費用を負担していただくことなく保証サービスを受けることができます。

注： HP製品の一部の部品は、顧客自己修理用ではありません。製品の保証を継続するためには、HPまたはHP正規保守代理店による交換作業が必須となります。部品カタログには、当該部品が顧客自己修理除外品である旨が記載されています。

部品供給が可能な場合、地域によっては、CSR部品を翌営業日に届くように発送します。また、地域によっては、追加費用を負担いただくことにより同日または4時間以内に届くように発送することも可能な場合があります。サポートが必要なときは、HPの修理受付窓口に電話していただければ、技術者が電話でアドバイスします。交換用のCSR部品または同梱物には、故障部品をHPに返送する必要があるかどうかが表示されています。故障部品をHPに返送する必要がある場合は、指定期限内（通常は5営業日以内）に故障部品をHPに返送してください。故障部品を返送する場合は、届いた時の梱包箱に関連書類とともに入れてください。故障部品を返送しない場合、HPから部品費用が請求されます。顧客自己修理の際には、HPは送料および部品返送費を全額負担し、使用する宅配便会社や運送会社を指定します。

客户自行维修

HP 产品提供许多客户自行维修 (CSR) 部件，以尽可能缩短维修时间和在更换缺陷部件方面提供更大的灵活性。如果在诊断期间 HP（或 HP 服务提供商或服务合作伙伴）确定可以通过使用 CSR 部件完成维修，HP 将直接把该部件发送给您进行更换。有两类 CSR 部件：

- **强制性的** — 要求客户必须自行维修的部件。如果您请求 HP 更换这些部件，则必须为该服务支付差旅费和人工费用。
- **可选的** — 客户可以选择是否自行维修的部件。这些部件也是为客户自行维修设计的。不过，如果您要求 HP 为您更换这些部件，则根据为您的产品指定的保修服务类型，HP 可能收取或不再收取任何附加费用。

注：某些 HP 部件的设计并未考虑客户自行维修。为了满足客户保修的需要，HP 要求授权服务提供商更换相关部件。这些部件在部件图解目录中标记为“否”。

CSR 部件将在下一个工作日发运（取决于备货情况和允许的地理范围）。在允许的地理范围内，可在当天或四小时内发运，但要收取额外费用。如果需要帮助，您可以致电 HP 技术支持中心，将会有技术人员通过电话为您提供帮助。HP 会在随更换的 CSR 部件发运的材料中指明是否必须将有缺陷的部件返还给 HP。如果要求您将有缺陷的部件返还给 HP，那么您必须在规定期限内（通常是五 (5) 个工作日）将缺陷部件发给 HP。有缺陷的部件必须随所提供的发运材料中的相关文件一起返还。如果未能送还有缺陷的部件，HP 可能会要求您支付更换费用。客户自行维修时，HP 将承担所有相关运输和部件返回费用，并指定快递商/承运商。

有关 HP 客户自行维修计划的详细信息，请与您当地的服务提供商联系。有关北美地区的计划，请访问 HP 网站 (http://www.hp.com/go/selfrepair)。

客戶自行維修

HP 產品設計了許多「客戶自行維修」(CSR) 的零件以減少維修時間，並且使得更換瑕疵零件時能有更大的彈性。如果在診斷期間 HP（或 HP 服務供應商或維修夥伴）辨認出此項維修工作可以藉由使用 CSR 零件來完成，則 HP 將直接寄送該零件給您作更換。CSR 零件分為兩種類別：

- **強制的** — 客戶自行維修所使用的零件是強制性的。如果您要求 HP 更換這些零件，HP 將會向您收取此服務所需的外出費用與勞動成本。
- **選購的** — 客戶自行維修所使用的零件是選購的。這些零件也設計用於客戶自行維修之用。不過，如果您要求 HP 為您更換，則可能需要也可能不需要負擔額外的費用，端視針對此產品指定的保固服務類型而定。

備註：某些 HP 零件沒有消費者可自行維修的設計。為符合客戶保固，HP 需要授權的服務供應商更換零件。這些零件在圖示的零件目錄中，被標示為「否」。

基於材料取得及環境允許的情況下，CSR 零件將於下一個工作日以快遞寄送。在環境的允許下當天或四小時內送達，則可能需要額外的費用。若您需要協助，可致電「HP 技術支援中心」，會有一位技術人員透過電話來協助您。不論損壞的零件是否必須退回，HP 皆會在與 CSR 替換零件一起運送的材料中註明。若要將損壞的零件退回 HP，您必須在指定的一段時間內（通常為五 (5) 個工作天），將損壞的零件寄回 HP。損壞的零件必須與寄送資料中隨附的相關技術文件一併退還。如果無法退還損壞的零件，HP 可能要向您收取替換費用。針對客戶自行維修情形，HP 將負責所有運費及零件退還費用並指定使用何家快遞/貨運公司。

如需 HP 的「客戶自行維修」方案詳細資訊，請連絡您當地的服務供應商。至於北美方案，請參閱 HP 網站 (http://www.hp.com/go/selfrepair)。

고객 셀프 수리

HP 제품은 수리 시간을 최소화하고 결함이 있는 부품 교체 시 더욱 융통성을 발휘할 수 있도록 하기 위해 고객 셀프 수리(CSR) 부품을 다량 사용하여 설계되었습니다. 진단 기간 동안 HP(또는 HP 서비스 공급업체 또는 서비스 협력업체)에서 CSR 부품을 사용하여 수리가 가능하다고 판단되면 HP는 해당 부품을 바로 사용자에게 보내어 사용자가 교체할 수 있도록 합니다. CSR 부품에는 두 가지 종류가 있습니다.

- **고객 셀프 수리가 의무 사항인 필수 부품.** 사용자가 HP에 이 부품의 교체를 요청할 경우 이 서비스에 대한 출장비 및 작업비가 청구됩니다.
- **고객 셀프 수리가 선택 사항인 부품.** 이 부품들도 고객 셀프 수리가 가능하도록 설계되었습니다. 하지만 사용자가 HP에 이 부품의 교체를 요청할 경우 사용자가 구입한 제품에 해당하는 보증 서비스 유형에 따라 추가 비용 없이 교체가 가능할 수 있습니다.

참고: 일부 HP 부품은 고객 셀프 수리가 불가능하도록 설계되었습니다. HP는 만족스러운 고객 보증을 위해 공인 서비스 제공업체를 통해 부품을 교체하도록 하고 있습니다. 이러한 부품들은 Illustrated Parts Catalog에 "No"라고 표시되어 있습니다.

CSR 부품은 재고 상태와 지리적 조건이 허용하는 경우 다음 영업일 납품이 가능하도록 배송이 이루어집니다. 지리적 조건이 허용하는 경우 추가 비용이 청구되는 조건으로 당일 또는 4시간 배송이 가능할 수도 있습니다. 도움이 필요하시면 HP 기술 지원 센터로 전화하십시오. 전문 기술자가 전화로 도움을 줄 것입니다. HP는 결함이 발생한 부품을 HP로 반환해야 하는지 여부를 CSR 교체 부품과 함께 배송된 자료에 지정합니다. 결함이 발생한 부품을 HP로 반환해야 하는 경우에는 지정된 기간 내(통상 영업일 기준 5일)에 HP로 반환해야 합니다. 이 때 결함이 발생한 부품은 제공된 포장 재료에 넣어 관련 설명서와 함께 반환해야 합니다. 결함이 발생한 부품을 반환하지 않는 경우 HP가 교체 부품에 대해 비용을 청구할 수 있습니다. 고객 셀프 수리의 경우, HP는 모든 운송 및 부품 반환 비용을 부담하며 이용할 운송업체 및 택배 서비스를 결정합니다.

HP 고객 셀프 수리 프로그램에 대한 자세한 내용은 가까운 서비스 제공업체에 문의하십시오. 북미 지역의 프로그램에 대해서는 HP 웹 사이트(http://www.hp.com/go/selfrepair)를 참조하십시오.

Acronyms and abbreviations

ABEND

abnormal end

ACU

Array Configuration Utility

ADU

Array Diagnostics Utility

ASR

Automatic Server Recovery

BBWC

battery-backed write cache

BIOS

Basic Input/Output System

CMOS

complementary metal-oxide semiconductor

CSA

Canadian Standards Association

CSR

Customer Self Repair

DIMM

dual inline memory module

DOS

disk operating system

ESD

electrostatic discharge

IEC

International Electrotechnical Commission

iLO 2

Integrated Lights-Out 2

IML

Integrated Management Log

ISEE

Instant Support Enterprise Edition

KVM

keyboard, video, and mouse

NEMA

National Electrical Manufacturers Association

NFPA

National Fire Protection Association

NIC

network interface controller

NiMH

nickel metal hydride

NVRAM

non-volatile memory

ORCA

Option ROM Configuration for Arrays

OS

operating system

PCI-X

peripheral component interconnect extended

PDU

power distribution unit

POST

Power-On Self Test

PPM

processor power module

PSP

ProLiant Support Pack

RAID

redundant array of inexpensive (or independent) disks

RBSU

ROM-Based Setup Utility

RDP

Rapid Deployment Pack

RILOE II

Remote Insight Lights-Out Edition II

ROM

read-only memory

SAS

serial attached SCSI

SCSI

small computer system interface

SFF

small form-factor

SIM

Systems Insight Manager

SNMP

Simple Network Management Protocol

TMRA

recommended ambient operating temperature

UID

unit identification

UPS

uninterruptible power system

USB

universal serial bus

VCA

Version Control Agent

Index

A

access panel 28
ACU (Array Configuration Utility) 58
adapter LEDs 7, 12
additional information 65
ADU (Array Diagnostic Utility) 62
Advanced ECC support 40
airflow requirements 22
Altiris Deployment Solution 57
Altiris eXpress Deployment Server 57
Array Configuration Utility (ACU) 58
Array Diagnostic Utility (ADU) 62
ASR (Automatic Server Recovery) 59
authorized reseller 90
auto-configuration process 56
Automatic Server Recovery (ASR) 59
Autorun menu 55

B

Basic Input/Output System (BIOS) 56, 61, 70
batteries, replacing 86
battery 13, 86
battery pack LEDs 18
battery replacement notice 86
battery-backed write cache (BBWC) 13, 18, 48, 53
battery-backed write cache battery pack 13
battery-backed write cache cabling 53
BBWC (battery-backed write cache) 13, 18, 48, 53
beep codes 80
BIOS (Basic Input/Output System) 56, 61, 70
BIOS Serial Console 56
BIOS upgrade 61
boot device selector switch 16, 43
boot options 57
BSMI notice 85
buttons, front panel 7
buttons, rear panel 12

C

cable management arm 25
cables 53, 68, 82
cabling, BBWC 53
cabling, power button 15, 54
cabling, USB 54
cabling, video 54
Canadian notice 83
Care Pack 21, 64
Change Control 64
class A equipment 81
class B equipment 81
CMOS (complementary metal-oxide semiconductor) 14
complementary metal-oxide semiconductor (CMOS) 14
components, front panel 6, 7
components, identification 6
components, internal 13
components, media board 15, 16
components, rear 11, 12
components, system board 13, 14
configuration of system 25, 26, 55
configuration tools 55
connection problems 68
connector, external power 11
connector, fan 13
connector, iLO 2 11
connector, internal USB 15
connector, keyboard 11
connector, mouse 11
connector, NIC 11
connector, power button cable 15
connector, serial 11
connector, USB 6, 11, 15, 54
connector, video 6, 11, 15, 54
contacting HP 90
creating a disk image 57
CSR (customer self repair) 90
customer self repair (CSR) 90

D

Declaration of Conformity 82
deployment software 57
diagnosing problems 65
diagnostic tools 55, 57, 59, 61, 62
diagnostics utility 62
DIMM banks, identification 9

DIMM banks, population 40
DIMM installation guidelines 40
DIMM slot locations 9
DIMMs 40
diskette boot 16
diskette drive 43
diskette image creation 57
drivers 63

E

electrical grounding requirements 24
electrostatic discharge 32, 87
environmental requirements 22, 88
environmental specifications 88
error messages 80
European Union notice 83
expansion board 46, 47
expansion slots 11, 13, 46, 47
extending server from rack 27
external health LED 7
external power connector 11

F

fan connectors 13
fan LED 16, 20
fans 19, 20, 29
fans, replacing 29
FCC (Federal Communications Commission) notice 81, 82
FCC rating label 81
features 6
Federal Communications Commission (FCC) notice 81, 82
flowcharts 69, 70, 72, 75, 76, 78
front panel buttons 7
front panel components 6, 7
front panel LEDs 7, 16

G

general diagnosis flowchart 70
grounding methods 87
grounding requirements 24

H

hard drive bays 6
hard drive LEDs 9, 10, 42
hard drives 6, 10, 42
hard drives, determining status of 9, 10
hard drives, installing 42
hard drives, types supported 42
hardware options 32
hardware options installation 25, 32
health driver 59
heatsink 34
HP Insight Diagnostics 62
HP ProLiant Essentials Foundation Pack 26, 60
HP ProLiant Essentials Rapid Deployment Pack 57
HP StorageWorks Library and Tape Tools (L&TT) 59
HP Systems Insight Manager, overview 60
HP technical support 90

I

identification number 81
iLO 2 (Integrated Lights-Out 2) 12, 59
iLO 2 connector 11
iLO NIC LED 12
IML (Integrated Management Log) 62
Important Safety Information document 65
Insight Diagnostics 62, 63
installation services 21
installation, server options 25, 32
installing memory 40
installing operating system 26
installing server 25
Integrated Lights-Out 2 (iLO 2) 12, 59
Integrated Management Log (IML) 62
internal components 13, 16
internal health LED 7, 16
internal USB connector 15

J

Japanese notice 84

K

keyboard connector 11
Korean notices 85

L

laser compliance 85
laser devices 85
LED, external health 7
LED, fan 16, 20
LED, iLO NIC 12
LED, internal health 7, 16
LED, power button 7
LEDs, battery pack 18

LEDs, front panel 7
LEDs, hard drive 9, 10, 42
LEDs, NIC 7, 12
LEDs, power supply 12, 45
LEDs, rear panel 12
LEDs, SAS hard drive 9, 10, 42
LEDs, SATA hard drive 9, 10, 42
LEDs, Systems Insight Display 16, 28, 29
LEDs, troubleshooting 65
LEDs, unit identification (UID) 7, 11, 12
loose connections 68

M

Management Agents 60
management tools 59
media board 13, 15, 16
media board components 13, 15, 16
media drive 6, 43
media drive bay 6, 43
media drive blank 6, 43
memory 40
memory, Advanced ECC 40
memory, installing 40
modifications, FCC notice 82
mouse connector 11

N

NIC connectors 11
NVRAM, clearing 14

O

Online ROM Flash Component Utility 61
operating systems 26, 64
operations 27
optimum environment 22
Option ROM Configuration for Arrays (ORCA) 25, 57
options installation 25, 32
ORCA (Option ROM Configuration for Arrays) 25, 57
OS boot problems flowchart 76

P

PCI expansion slot definitions 13, 46
phone numbers 90
port 85 code, viewing 16
POST error messages 80
POST problems flowchart 75
power button cable connector 15
power button cabling 15, 54
power button LED 7
power connectors, external 11
power connectors, internal 13
power cord 66, 86
power distribution unit (PDU) 24
Power On/Standby button 7, 25, 27
power requirements 23
power supply 11, 12, 45
power supply blank 45
power supply LEDs 12, 45
powering down 27
powering up 27, 57
power-on problems flowchart 72
PPM (processor power module) 8, 34
preboot execution environment (PXE) 26
pre-diagnostic steps 65
preparation procedures 27, 68
problem diagnosis 65
processor installation tool 34
processor memory module 6, 8, 32, 34
Processor Power Module (PPM) 8, 34
processor socket 8, 34
processors 8, 32, 34
ProLiant Support Pack (PSP) 64
PSP (ProLiant Support Pack) 64
PXE (preboot execution environment) 26

R

rack installation 21, 25
rack resources 21
rack stability 66
rack warnings 23, 66
rack, extending server from 27
RBSU (ROM-Based Setup Utility) 56
RBSU configuration 57
rear panel buttons 12
rear panel components 11
rear panel LEDs 12
recommended ambient operating temperature (TMRA) 22
redundant fan 19, 20, 29
redundant system fan 19, 20, 29
registering the server 26
regulatory compliance identification numbers 81
regulatory compliance notices 81, 83, 86
remote support and analysis tools 63
required information 90
requirements, airflow 22

requirements, electrical grounding 24
requirements, environmental 22, 88
requirements, power 23
requirements, site 22
requirements, space 22
requirements, temperature 22
ROM redundancy 60
ROM, updating 34, 61
ROM-Based Setup Utility (RBSU) 56
ROMPaq utility 61

S

safety considerations 65
safety information 60
SAS cabling 54
SAS device numbers 42
SAS hard drive 10, 42
SAS hard drive LEDs 9, 10, 42
SATA cabling 54
SATA drives 42
SATA hard drive 10, 42
SATA hard drive LEDs 9, 10, 42
scripted installation 55
serial connector 11
serial number 58
series number 81
server asset text 58
server fault indications flowchart 78
server features and options 32
server options, installing 25, 32
server specifications 88
server, installation 25
service notifications 69
shipping carton contents 25
site requirements 22
SmartStart autorun menu 55
SmartStart Scripting Toolkit 55
SmartStart software 26
SmartStart, overview 55
space requirements 22
specifications 88
specifications, environmental 88
specifications, server 88
start diagnosis flowchart 69
static electricity 87
status lights, battery pack 18
StorageWorks Library and Tape Tools (L&TT) 59
support 63, 90
support packs 55
supported operating systems 64
switch, boot device selector 16, 43
switch, system maintenance 13, 14
symbols on equipment 66
symptom information 67
system battery 30
system board 13, 58
system board components 13
system board switches 14
system maintenance switch 13, 14
system power LED 18, 27
system, keeping current 63
Systems Insight Display LEDs 16, 29

T

Taiwan battery recycling notice 86
technical support 90
telephone numbers 90
temperature requirements 22
TMRA (recommended ambient operating temperature) 22
Torx screwdriver 11
troubleshooting flowcharts 69
troubleshooting resources 65

U

UID (unit identification) 7, 11, 12
UID LED 7, 11, 12
uninterruptible power supply (UPS) 23
unit identification (UID) 7, 11, 12
updating the system ROM 34
UPS (uninterruptible power supply) 23
USB connector cabling 15
USB connectors 6, 11, 15, 54
USB support 61
utilities 55
utilities, deployment 55, 56, 57

V

ventilation 22
video connector 6, 11, 15, 54
video connector cabling 54