HPE ProLiant DL585 G5 Server -Spare Parts

New model specific parts lists

HPE ProLiant DL585 G5 generic parts list

System components

Link to the product related documents

New model specific parts lists

IMPORTANT: To obtain current part number information for a specific product model, use the Standard Models page for this product family.

Click here to go to the Standard Models page for all model specific information and to access the product model parts lists .

- The product Standard Models page now links the model SKU numbers to the spare parts list for each model found on the HPE PartSurfer web site. (To report missing or incorrect parts information in PartSurfer, please use the "Contact us" and "Missing or incorrect data" links within the PartSurfer web site utility.)
- To lookup RoHS-compliant information in PartSurfer, use the component’s option part number or the sales order number for a system in which the component is used (available in the QuickSpecs or Standard Models page). The spare part number does not provide RoHS-compliant information.

top

HPE ProLiant DL585 G5 generic parts list

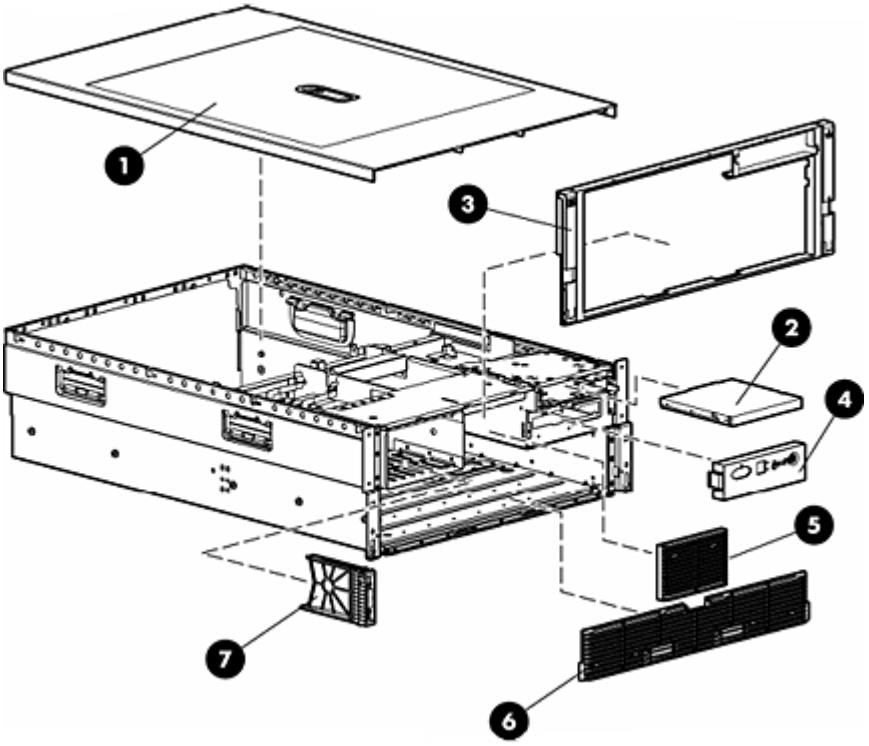

Item	Description	Assembly part number	Spare part number	Customer self repair
1	Access panel	367572-002	419905-001	Mandatory[1]
2	Blank, media drive	377569-001	409006-001	Mandatory[1]
Bezel kits				
3	Front bezel	414072-001	419897-001 (Contains items 3 & 4)	Mandatory[1]
4	Power assembly bezel	414073-001	419897-001 (Contains items 3 & 4)	Mandatory[1]
5	Processor / memory tray module fan bezel	414122-001	419904-001 (Contains items 5 & 6)	Mandatory[1]
6	Processor / memory tray module bezel	414119-001	419904-001 (Contains items 5 & 6)	Mandatory[1]
7	Hard drive blank (cover) - To fill empty 2.5-inch small form factor (SFF) drive bay slots	376383-001	392613-001	Mandatory[1]
8	Tool, Torx, T-15*	107473-001	199630-001	Mandatory[1]

NOTE: **1:** Mandatory - Parts for which customer self repair is mandatory. If the customer requests HPE to replace these parts, the customer will be charged for the travel and labor costs of this service.

2: Optional - Parts for which customer self repair is optional. These parts are also designed for customer self repair. If, however, HPE replaces the parts for the customer, there may or may not be additional charges, depending on the type of warranty service designated for the product.

3: No - Some HPE parts are not designed for customer self repair. In order to satisfy the customer warranty, HPE requires that an authorized service provider replace the part. These parts are identified as "No" in the Illustrated Parts Catalog.

***** Not shown

top

System components

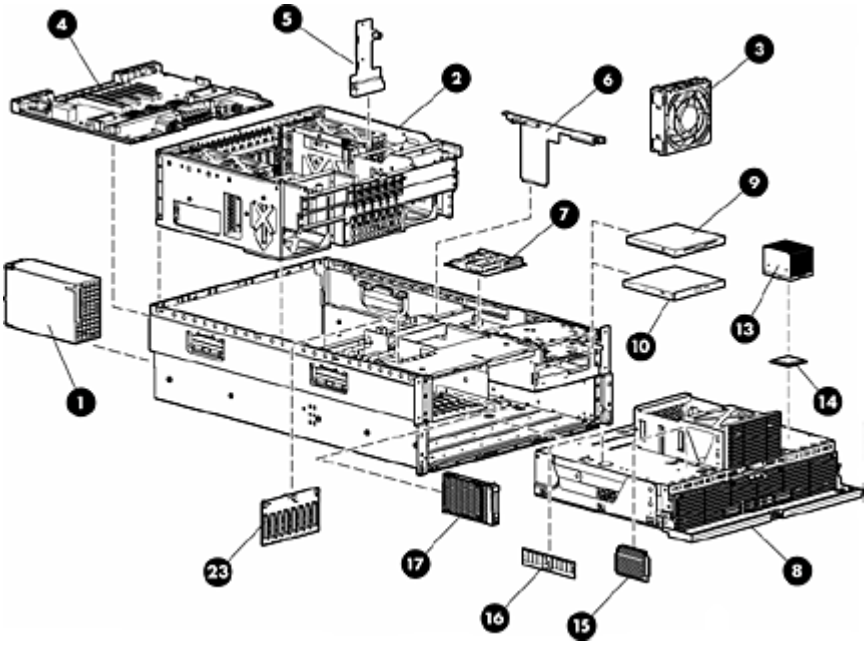

Item	Description	Assembly part number	Spare part number	Customer self repair
1	910/1300 W AC hot-plug power supply assembly - Installs in computer chassis as primary or redundant supply - Provides 910 W at 120 V ac and 1300 W at 220 V ac nominal input - Requires 100-240 V ac at 50/60 Hz	337867-501	406421-001	Mandatory[1]
2	System cage	—	—	No[3]
3	Hot-plug fan assembly - 120 mm x 120 mm (4.7 inches x 4.7 inches) - Includes the fan bracket with assembly handle and LED indicator - Six are used	364517-001	374552-001	Mandatory[1]
Boards				
4	System I/O bord assembly - Includes two PCI-X slots, four x4 PCIe slots, three x8 PCIe slots, and rear panel NIC, iLO2, USB, serial, video, mouse and keyboard connectors	013241-001	463751-001	No[3]
5	Power supply backplane	012671-001	419620-001	No[3]
6	Pass-through board - Vertical board that interconnects the multimedia board to the system I/O board - Mounts on the right side of the server	012896-001	419621-001	Mandatory[1]
7	Media board - Includes the System Insight Disply (SID) assembly and connectors for the floppy drive, optical drive, video cable, USB cable, and power switch cable	012668-001	419619-001	Optional[2]
Processor memory module				
8	System processor and memory cartridge drawer assembly - Includes the system processor memory cartridge board in the slide-out drawer assembly	013208-001	454592-001	Optional[2]

Item	Description	Assembly part number	Spare part number	Customer self repair
Media drives				
9	IDE Slimline Ejectable 1.44MB floppy disk drive (Carbon Black) - 68-pin connector, 12.7 mm (0.5 inch) height - Mounts in the multi-media drive bay	263394-002	399396-001	Mandatory[1]
10	DE Slimline CD-R/RW DVD-ROM combination optical drive (Carbon Black) - 8X DVD-ROM read, 24X CD-ROM read, 68-pin connector, 12.7 mm (0.5 inch) height - Mounts in the multi-media drive bay	383696-002	399959-001	Mandatory[1]
11	IDE DVD+R/RW Slimline optical drive (Carbon Black) - 8X speed, 68-pin connector, 12.7 mm (0.5 inch) height - Mounts in the multi-media drive bay*	395911-001	399402-001	Mandatory[1]
12	IDE Slimline DVD-ROM optical drive (Carbon Black) - 8X DVD-ROM read, 24X CD-ROM read, 68-pin connector, 12.7 mm (0.5 inch) height - Mounts in the multi-media drive bay*	395910-001	397928-001	Mandatory[1]
Processor options				
13	Latch type processor heatsink assembly - Latches to the top of the processor with heatsink retainer cage on the processor / memory board	415651-001	419898-001	Optional[2]
14a	AMD Opteron 8347HE Quad-Core processor - 1.9 GHz (Barcelona MP, 2MB Level-3 cache, 1.0 GHz HyperTransport (HT), 79 W Thermal Design Power (TDP), socket F)	448209-002	457127-001	Optional[2]
14b	AMD Opteron 8350 Quad-Core processor - 2.0 GHz (Barcelona MP, 2MB Level-3 cache, 1.0 GHz HyperTransport (HT), 95 W Thermal Design Power (TDP), socket F)*	448208-004	457129-001	Optional[2]
14c	AMD Opteron 8354 Quad-Core processor - 2.2 GHz (Barcelona MP, 2MB Level-3 cache, 1.0 GHz HyperTransport (HT), 95 W Thermal Design Power (TDP), socket F) *	448208-002	448404-001	Optional[2]
14d	AMD Opteron 8356 Quad-Core processor - 2.3 GHz (Barcelona MP, 2MB Level-3 cache, 1.0 GHz HyperTransport (HT), 95 W Thermal Design Power (TDP), socket F) *	448208-001	448405-001	Optional[2]
14e	AMD Opteron 8358SE Quad-Core processor - 2.4 GHz (Barcelona MP, 2MB Level-3 cache, 1.0 GHz HyperTransport (HT), 105 W Thermal Design Power (TDP), socket F)*	448202-002	448406-001	Optional[2]
14f	AMD Opteron 8360SE Quad-Core processor - 2.5 GHz (Barcelona MP, 2MB Level-3 cache, 1.0 GHz HyperTransport (HT), 119 W Thermal Design Power (TDP), socket F)*	448202-001	448407-001	Optional[2]
14g	AMD Opteron 8382 Quad-Core processor - 2.6 GHz (Shanghai, 6MB Level-3 cache, 1.0 GHz HyperTransport (HT), 115 W Thermal Design Power (TDP), socket F)*	495641-004	508592-001	Optional[2]

Item	Description	Assembly part number	Spare part number	Customer self repair
14h	AMD Opteron 8384 Quad-Core processor - 2.7 GHz (Shanghai, 6MB Level-3 cache, 1.0 GHz HyperTransport (HT), 115 W Thermal Design Power (TDP), socket F)*	495641-005	508593-001	Optional[2]
14i	AMD Opteron 8378 Quad-Core processor - 2.4 GHz (Shanghai, 6MB Level-3 cache, 1.0 GHz HyperTransport (HT), 115 W Thermal Design Power (TDP), socket F)*	495641-002	500516-001	Optional[2]
14j	AMD Opteron 8380 Quad-Core processor - 2.5 GHz (Shanghai, 6MB Level-3 cache, 1.0 GHz HyperTransport (HT), 115 W Thermal Design Power (TDP), socket F)*	495641-001	500517-001	Optional[2]
14k	AMD Opteron 8386 SE Quad Core processor - 2.80 GHz (Shanghai, 6MB Level-3 cache, 105 W Average CPU Power (ACP), 137 W Thermal Design Power (TDP), socket F)*	530615-001	518004-001	Optional[2]
14l	AMD Opteron 8387 Quad-Core processor - 2.8 GHz (Shanghai, 6MB Level-3 cache, 2.2 GHz HyperTransport (HT), 115 W Thermal Design Power (TDP), socket F)	530520-002	534243-001	Optional[2]
14m	AMD Opteron 8389 Quad-Core processor - 2.9 GHz (Shanghai, 6MB Level-3 cache, 2.2 GHz HyperTransport (HT), 115 W Thermal Design Power (TDP), socket F)	530520-003	534242-001	Optional[2]
14n	AMD Opteron 8393SE Quad-Core processor - 3.1 GHz (Shanghai, 6MB Level-3 cache, 2.2 GHz HyperTransport (HT), 137 W Thermal Design Power (TDP), socket F)	535363-001	570009-001	Optional[2]
14o	AMD Opteron 8425HE Six-Core processor - 2.1 GHz (Istanbul, 6MB Level-3 cache, 2.4 GHz HyperTransport (HT), 79 W Thermal Design Power (TDP), socket F)	539686-001	572551-001	Optional[2]
14p	AMD Opteron 8431 Six-Core processor - 2.4 GHz (Istanbul, 6MB Level-3 cache, 2.4 GHz HyperTransport (HT), 115 W Thermal Design Power (TDP), socket F)	539451-002	539661-001	Optional[2]
14q	AMD Opteron 8439SE Six-Core processor - 2.8 GHz (Istanbul, 6MB Level-3 cache, 2.4 GHz HyperTransport (HT), 137 W Thermal Design Power (TDP), socket F)	539449-001	539659-001	Optional[2]
14r	AMD Opteron 8435 Six-Core processor - 2.6 GHz (Istanbul, 6MB Level-3 cache, 2.4 GHz HyperTransport (HT), 115 W Thermal Design Power (TDP), socket F)	539451-001	539660-001	Optional[2]
15	Processor power module (PPM) - Includes voltage regulator module (VRM) - For use with AMD processor	450967-001	454593-001	Mandatory[1]
Memory				
16a	512MB, 667 MHz, PC2-5300R, DDR2, single-rank x8, 1.50 V, registered dual in-line memory module (RDIMM)*	405474-051	430449-001	Mandatory[1]
16b	1GB, 66 7MHz, PC2-5300R, DDR2, single-rank x4, 1.50 V, registered dual in-line memory module (RDIMM)*	405475-001	430450-001	Mandatory[1]

Item	Description	Assembly part number	Spare part number	Customer self repair
16c	1GB, 800 MHz, PC2-6400R, DDR2, single-rank x8, 1.50 V, registered with ECC dual in-line memory module (RDIMM)*	499275-061	501156-001	Mandatory[1]
16d	2GB, 667 MHz, PC2-5300R, DDR2, dual-rank x4, 1.50 V, registered dual in-line memory module (RDIMM)*	405476-051	432668-001	Mandatory[1]
16e	2GB, 800 MHz, PC2-6400R, DDR2, dual-rank x4, 1.50 V, registered with ECC dual in-line memory module (RDIMM)*	499276-061	501157-001	Mandatory[1]
16f	4GB, 667 MHz, PC2-5300R, DDR2, dual-rank x4, 1.50 V, registered dual in-line memory module (RDIMM)*	405477-061	432670-001	Mandatory[1]
16g	4GB, 800 MHz, PC2-6400R, DDR2, single-rank x4, 1.50 V, registered with ECC dual in-line memory module (RDIMM)*	499277-061	501158-001	Mandatory[1]
16h	8GB, 667 MHz, PC2-5300R, DDR2, dual-rank x4, 1.50 V, registered dual in-line memory module (RDIMM)*	405478-071	432671-001	Mandatory[1]
Hard drives				
17a	72GB hot-plug single-port SAS hard disk drive - 10,000 RPM, 3Gb/sec transfer rate, 2.5-inch small form factor (SFF)*	375863-004	376597-001	Mandatory[1]
17b	36GB hot-plug single-port SAS hard disk drive - 10,000 RPM, 3Gb/sec transfer rate, 2.5-inch small form factor (SFF)	375863-001	376596-001	Mandatory[1]
17c	146GB hot-plug single-port SAS hard disk drive - 10,000 RPM, 3Gb/sec transfer rate, 2.5-inch small form factor (SFF)*	375863-012	432320-001	Mandatory[1]
17d	60GB hot-plug SATA hard disk drive - 5,400 RPM, 1.5Gb/sec transfer rate, 2.5-inch small form factor (SFF)*	390158-002	405419-001	Mandatory[1]
SAS parts				
18	HP Smart Array P400 controller board - PCIe x8 SAS controller - Has two internal x4 SAS ports and memory connector - For up to 3Gb/sec SAS and 1.5Gb/sec SATA transfer rate - Does not include memory*	012760-002	405832-001	Optional[2]
19	512MB battery backed write cache (BBWC) memory module - Does not include the controller board or battery - For use with the P400 Smart Array controller*	012764-003	405835-001	Optional[2]
20	256MB battery backed write cache (BBWC) memory module - Does not include the controller board or battery - For use with the P400 Smart Array controller*	012764-004	405836-001	Optional[2]
21	Battery module with integrated charger - Ni-MH, 4.8 V, 5000 mAh - For use with the Smart Array P400 and P800 SAS controller boards with battery backed write cache (BBWC)*	381573-001	398648-001	Optional[2]

Item	Description	Assembly part number	Spare part number	Customer self repair
22	Smart Array P400 controller battery cable assembly - 28AWG, 16-pin - 610 mm (24 inches) long - Connects between the battery pack and the memory module*	408658-002	409125-001	Mandatory[1]
23	SAS hard drive connector backplane board - Mounts on the rear of the front panel drive bay cage	012665-001	419618-001	Optional[2]
24	SAS / SATA cable assembly - 4x straight connector to 4x straight connector - Connects between the SAS backplane board and the SAS controller*	361316-002	389948-001	Optional[2]
Cables				
25	Cable kit, data*	—	419906-001	Optional[2]
25a	Cable assembly, USB (dual, 15-in)*	404807-001	—	Optional[2]
25b	Cable assembly, video (15-in)*	392250-003	—	Optional[2]
25c	Cable assembly, SAS power (15-in)*	394038-002	—	Optional[2]
25d	Cable assembly, power button (16-in)*	367602-002	—	Optional[2]
Miscellaneous				
26	Battery for real-time clock (RTC) - 3.0 V, 220 mAh, lithium coin cell, 20 mm diameter, 3.2 mm height (CR2032)	166899-001	319603-001	Mandatory[1]
27	Rack mount kit, universal*	374503-001	377839-001	Mandatory1
28	AC power cord - 250 V ac, 10 A - 3.04 m (10 ft) long - C14 (M) connector to C19 (F) connector*	287485-002	311582-001	Mandatory[1]
29	Hardware kit, miscellaneous*	—	385642-001	Mandatory[1]
30	CD/Diskette drive blank*	377569-001	—	Mandatory[1]
31	Blank, power supply*	366450-002	—	Mandatory[1]

NOTE: **1:** Mandatory - Parts for which customer self repair is mandatory. If the customer requests HPE to replace these parts, the customer will be charged for the travel and labor costs of this service.

2: Optional - Parts for which customer self repair is optional. These parts are also designed for customer self repair. If, however, HPE replaces the parts for the customer, there may or may not be additional charges, depending on the type of warranty service designated for the product.

3: No - Some HPE parts are not designed for customer self repair. In order to satisfy the customer warranty, HPE requires that an authorized service provider replace the part. These parts are identified as "No" in the Illustrated Parts Catalog.

***** Not shown

top

Link to the product related documents

Click here to view a list of product related documents .

top

©Copyright 2026 Hewlett Packard Enterprise Development LP

Hewlett Packard Enterprise Development shall not be liable for technical or editorial errors or omissions contained herein. The information provided is provided "as is" without warranty of any kind. To the extent permitted by law, neither HPE nor its affiliates, subcontractors or suppliers will be liable for incidental, special or consequential damages including downtime cost; lost profits; damages relating to the procurement of substitute products or services; or damages for loss of data, or software restoration. The information in this document is subject to change without notice. Hewlett Packard Enterprise Development and the names of Hewlett Packard Enterprise Development products referenced herein are trademarks of Hewlett Packard Enterprise Development in the United States and other countries. Other product and company names mentioned herein may be trademarks of their respective owners.