HPE ProLiant DX170r Gen10 Server - Product Information Reference

HPE ProLiant DX170r Gen10 Server - Product Information Reference

© Copyright ,

Notices

The information contained herein is subject to change without notice. The only warranties for Hewlett Packard Enterprise products and services are set forth in the express warranty statements accompanying such products and services. Nothing herein should be construed as constituting an additional warranty. Hewlett Packard Enterprise shall not be liable for technical or editorial errors or omissions contained herein.

Confidential computer software. Valid license from Hewlett Packard Enterprise required for possession, use, or copying. Consistent with FAR 12.211 and 12.212, Commercial Computer Software, Computer Software Documentation, and Technical Data for Commercial Items are licensed to the U.S. Government under vendor's standard commercial license.

Links to third-party websites take you outside the Hewlett Packard Enterprise website. Hewlett Packard Enterprise has no control over and is not responsible for information outside the Hewlett Packard Enterprise website.

Acknowledgments

Intel®, Itanium®, Optane™, Pentium®, Xeon®, Intel Inside®, and the Intel Inside logo are trademarks of Intel Corporation in the U.S. and other countries.

AMD and the AMD EPYC™ and combinations thereof are trademarks of Advanced Micro Devices, Inc.

Microsoft® and Windows® are either registered trademarks or trademarks of Microsoft Corporation in the United States and/or other countries.

Adobe® and Acrobat® are trademarks of Adobe Systems Incorporated.

Java® and Oracle® are registered trademarks of Oracle and/or its affiliates.

UNIX® is a registered trademark of The Open Group.

All third-party marks are property of their respective owners.

Revision history

Part number	Publication date	Edition	Summary of changes

Table of contents

Overview

- Product description 5
- New RoHS compliant part numbers 5
- Standard models 5
- Product features 6

Specifications

- Physical specifications 11
- Electrical specifications 11
- Environmental specifications 12

Compatibility/Supportability

- New model specific parts lists 14
- Processors 14
- Memory 17
- Adapters 18
- Drives 19
- Rail kits 21
- HPE Support services 21
- New model specific parts lists 22
- Mechanical components 22
- System components 23
- Server options 32
- OS Compatibility 37
- Software Compatibility 38

Product description

Hewlett Packard Enterprise

The HPE ProLiant DX170r Gen10 Server along with Nutanix provide a global partnership to deliver Hyper-Converged solutions in an on premise appliance or through the HPE Greenlake consumption model. This offering will leverage Nutanix's free Acropolis Hypervisor (AHV) hypervisor and Nutanix Enterprise Cloud software to provide end users with a Pre-Integrated and optimized solution that dramatically lowers Total Cost of Ownership (TCO) and accelerates operational productivity.

New RoHS compliant part numbers

To find the latest RoHS compliance information, please use the HPE PartSurfer (**Click here to visit HPE PartSurfer website**) and click on one of the linked model numbers. When locating RoHS information in PartSurfer, user can use the option part number for the components, the sales order number for a system that the component is used in, or the spare part number for a specific part. User can find the sales order numbers and option part numbers in the product QuickSpecs.

Standard models

Description	Part Number
HPE ProLiant DX170r Gen10 1U Node Configure-to-order Server	P17977-B21

NOTE:

Direct link to the parts list will be added as soon as it becomes available

Product features

Feature	Description							
Processors	**Intel Xeon Models**	**CPU Frequency**	**Cores**	**L3 Cache**	**Power**	**QuickPath Interconnect (QPI)**	**DDR4/ MT/s**	**Memory Per Socket**
	2nd Generation Intel xeon scalable processor family							
	Platinum 8253 processor	2.2 GHz	16	22MB	125 W	3 @ 10.4 GT/s	2933 MT/s	1TB
	Gold 6252 processor	2.1 GHz	24	35.75MB	150 W	3 @ 10.4 GT/s	2933 MT/s	1TB
	Gold 6248 processor	2.5 GHz	20	27.5MB	150 W	3 @ 10.4 GT/s	2933 MT/s	1TB
	Gold 6244 processor	3.6 GHz	8	24.75MB	150 W	3 @ 10.4 GT/s	2933 MT/s	1TB
	Gold 6242 processor	2.8 GHz	16	22MB	150 W	3 @ 10.4 GT/s	2933 MT/s	1TB
	Gold 6240 processor	2.6 GHz	18	24.75MB	150 W	3 @ 10.4 GT/s	2933 MT/s	1TB
	Gold 6238 processor	2.1 GHz	22	30.25MB	140 W	3 @ 10.4 GT/s	2933 MT/s	1TB
	Gold 6234 processor	3.3 GHz	8	24.75MB	130 W	3 @ 10.4 GT/s	2933 MT/s	1TB
	Gold 6230 processor	2.1 GHz	20	27.5MB	125 W	3 @ 10.4 GT/s	2933 MT/s	1TB
	Gold 6226 processor	2.7 GHz	12	19.25MB	125 W	3 @ 10.4 GT/s	2933 MT/s	1TB
	Gold 5220 processor	2.2 GHz	18	24.75MB	125 W	2 @ 10.4 GT/s	2666 MT/s	1TB

Feature	Description							
	Gold 5218 processor	2.3 GHz	16	22MB	125 W	2 @ 10.4 GT/s	2666 MT/s	1TB
	Gold 5217 processor	3 GHz	8	11MB	115 W	2 @ 10.4 GT/s	2666 MT/s	1TB
	Gold 5215 processor	2.5 GHz	10	11MB	85 W	2 @ 10.4 GT/s	2666 MT/s	1TB
	Silver 4216 processor	2.1 GHz	16	22MB	100 W	2 @ 10.4 GT/s	2400 MT/s	1TB
	Silver 4215 processor	2.5 GHz	8	11MB	85 W	2 @ 10.4 GT/s	2400 MT/s	1TB
	Silver 4214 processor	2.2 GHz	12	16.5MB	85 W	2 @ 10.4 GT/s	2400 MT/s	1TB
	Silver 4210 processor	2.2 GHz	10	13.75MB	85 W	2 @ 10.4 GT/s	2400 MT/s	1TB
	Silver 4208 processor	2.1 GHz	8	11MB	85 W	2 @ 10.4 GT/s	2400 MT/s	1TB
	Silver 4214 processor	2.2 GHz	12	16.5MB	85 W	2 @ 10.4 GT/s	2400 MT/s	1TB
	Silver 4210 processor	2.2 GHz	10	13.75MB	85 W	2 @ 10.4 GT/s	2400 MT/s	1TB
	Silver 4208 processor	2.1 GHz	8	11 MB	85 W	2 @ 10.4 GT/s	2400 MT/s	1TB
Chipset [1]	HPE iLO 5 ASIC Intel C622 chipset (Intel EY82C622 PCH)							
On system manag	HPE iLO 5 ASIC							

Feature	Description					
ement pr ocessor [2]						
Memory [3]	**Type**	HPE SmartMemory Dual Data Rate (DDR4) Load Reduced Dual In-line Memory Module (L RDIMM), or Registered Dual In-line Memory Module (RDIMM)				
	HPE SmartMemory	16 Dual In-line Memory Module (DIMM) slots available				
	Maximum (LRDIMM) (Per server tray)	2TB, 2nd Generation Intel Xeon scalable processor				
Memory p rotection	**Click here to access the technical white paper for Memory RAS technologies for HPE ProLi ant/Synergy/Blade Gen10 servers with Intel Xeon Scalable processors**.					
Expansio n Slots (E E) [4]	**Expansio n Slot #**	**Technolo gy**	**Bus Widt h** [5]	**Source**	**Connecto r Width**	**Form Factor**
	1	PCIe 3.0	x16	CPU1	x16	Low profile
	FlexibleLO M	PCIe 3.0	x16	CPU1	x16	FlexibleLOM
Internal h ard drives [6]	None, drives are selected with the server but installed in the HPE ProLiant DX2000 Chassis **HPE ProLiant DX2200 Large Form Factor (12LFF) hard drive configurations** • **Hybrid Solid State Drive (SSD) / Hard Disk Drive (HDD):** 1 SSD and 2 HDD per server **HPE ProLiant DX2600 Small Form Factor (24SFF) hard drive configurations** • **Hybrid SSD/HDD:** 2 SSD and 4 HDD per server • **All SSD:** 2, 4, or 6 per server					
Interfaces	**FlexibleLOM**	HPE ProLiant Gen10 servers offer a new networking Tech nology-Flexible network technology. The HPE ProLiant Ge n10 server offers the end user the choice of 1Gb, 10Gb, 25 Gb FlexibleLOM solutions depending on workload.				
	KVM	Serial USB Video Port (SUV)				
	USB Ports	2 (External via SUV) 1 USB 3.0 (External)				
	HPE iLO Remote management n etwork port	Aggregated via HPE ProLiant DX2000 chassis Option for dedicated NIC IM Board kit				

Feature	Description	
	Health LED	1
	Power	1
	UID	1
	Do not remove LED	1
Industry standard compliance	• Advanced Configuration and Power Interface (ACPI) 6.2 Compliant • PCIe 3.0 Compliant • Wake-on-LAN (WoL) support • Microsoft logo certifications • Preboot Execution Environment (PXE) Support • USB 3.0 Compliant (Internal); USB 2.0 compliant (External ports via SUV) • System Management BIOS (SMBIOS) 3.1 • Unified Extensible Firmware Interface (UEFI) 2.6 • Redfish API	
Graphics	Integrated matrix G200 video standard • 1280 x 1024 (32 bpp) • 1920 x 1200 (16 bpp) • HPE iLO 5 on system management memory • 32MB flash • 512MB DDR3 with ECC (112MB after ECC and video)	
Form factor	The ProLiant DX170r Gen10 Server is a half width tray for the HPE ProLiant DX2000 Chassis	
Embedded management	• HPE Integrated Lights-Out (HPE iLO) • iLO RESTful API	
Server management	• HPE iLO Advanced • HPE OneView Advanced	

Feature	Description
	• HPE Performance Cluster Management (HPCM) • HPE Performance software - Message Passing Interface (MPI)
Security	• Immutable silicon root of trust • Support for Commercial National Security Algorithms (CNSA) • Granular control over iLO interfaces • Common Access Card (CAC) 2-factor Authentication • Tamper-Free updates - Components digitally signed and verified • Secure Recovery - Recover critical firmware to known good state on detection of compromised firmware • Intrusion security kit option • Runtime firmware validation - Periodically scan essential firmware for compromised code during runtime

NOTE:

1. For more information regarding Intel® chipsets, please see the following URL:

   Click here to access the webpage for Intel Server Chipsets.

2. **Click here to access the QuickSpecs page for HPE Integrated Lights-Out (iLO)**.

3.

   - HPE memory from previous generation servers are not fully compatible with the HPE ProLiant DX170r Gen10 server.
   - To realize the performance memory capabilities listed in this document, HPE Smart Memory is required.
   - LRDIMM and RDIMM are distinct memory technologies and cannot be mixed within a server.
   - The maximum memory speed is a function of the memory type, memory configuration, and processor model. Please see Memory Population Table or the Online Memory Configuration Tool at:

     Click here to access the HPE Server Memory Configurator.

   - Memory DIMM availability with a server platform is dependent upon completion of certification testing.

4.

Feature	Description
	• Expansion slot 1 is preconfigured with the HPE XL1x0r Gen10 Left LP Riser Kit an d HPE Smart Array E208i-p SR Gen10 Controller. • Expansion slot 2 is preconfigured with the HPE DX170r Gen10 FLOM Riser Kit, cu stomers can select from the FLOM network adapters available for the HPE ProLian t DX170r. 5. Indicates the number of physical electrical lanes running to the connector 6. SAS and SATA SSDs cannot be mixed.

.

Physical specifications

Specifications	Description
Dimensions (L x W x D)	4.13 x 18.45 x 65.80 cm (1.63 x 7.27 x 25.91 in)
Weight (Approximate) (Maximum)	6.91 kg (15.23 lb)

Electrical specifications

Specifications	Description
Power	The HPE ProLiant DX2000 server chassis come prec onfigured with two (2) HPE 1800 W - 2200 W flex sl ot platinum Hot-Plug power supplies To review typical system power ratings use the HPE Power advisor which is available via the online tool l ocated at URL:

Specifications	Description
	Click here to access the server power supplies page.

NOTE:

Power specification and technical content for supported power supplies can be found at:

Click here to view the QuickSpecs homepage, which provides access to the QuickSpecs for other regions/countries.

Environmental specifications

Specifications	Description
System inlet temperature standard operating support	10° to 35°C (50° to 95°F)
Extended ambient operating support	• 5° to 10°C (41° to 50°F) and 35° to 40°C (95° to 104°F) • (-30°) to 60°C ((-22°) to 140°F) - Maximum rate of change is 20°C/hr (36°F/hr)
Relative humidity (Rh) (Non-Condensing)	**Operating** • 8% to 90% • Rh, 28°C (82°F) maximum wet bulb temperature **Non-Operating** • 5% to 95% • Rh, 38.7°C (101.7°F) maximum wet bulb temperature
Altitude	**Operating** • 3050 m (10,000 ft) • This value may be limited by the type and number of options installed

Specifications	Description
	• Maximum allowable altitude change rate is 457 m/min (1500 ft/min) **Non-Operating** • 9144 m (30,000 ft) • Maximum allowable altitude change rate is 457 m/min (1500 ft/min)

Acoustic noise

Configuration SKU	Entry	Base	Performance
DX2200 Chassis			
Idle			
LWAd	6.7 B	7.8 B	8.4 B
LpAm	52 dBA	62 dBA	70 dBA
Operating			
LWAd	6.9 B	8.2 B	8.9 B
LpAm	53 dBA	66 dBA	68 dBA
DX2600 Chassis			
Idle			
LWAd	6.7 B	7.7 B	7.9 B
LpAm	52 dBA	64 dBA	68 dBA
Operating			
LWAd	6.9 B	8.0 B	8.7 B
LpAm	54 dBA	66 dBA	70 dBA

NOTE:

Acoustics levels presented here are generated by the test configurati on only. Acoustics levels will vary depending on system configuration. Values are subject to change without notification and are for referenc e only.

New model specific parts lists

IMPORTANT: To obtain current part number information for a specific product model, use the Standard Models page for this product family.

.

- The product Standard Models page now links the model SKU numbers to the spare parts list for each model found on the **HPE PartSurfer web site**. (To report missing or incorrect parts information in PartSurfer, please use the "Contact us" and "Missing or incorrect data" links within the PartSurfer web site utility).
- To look up RoHS-compliant information in PartSurfer, use the component's option part number or the sales order number for a system in which the component is used (Available in the QuickSpecs or Standard Models page).

Processors

Description	Option Part Number
2nd Generation Intel Xeon	
HPE DX1x0r Gen10 Intel Xeon-Platinum 8253 (2.2 GHz/16-core/125 W) Factory Installed Option (FIO) processor kit	P18018-L21
HPE DX1x0r Gen10 Intel Xeon-Gold 6252 (2.1 GH z/24-core/150 W) FIO processor kit	P18017-L21
HPE DX1x0r Gen10 Intel Xeon-Gold 6248 (2.5 GH z/20-core/150 W) FIO processor kit	P18016-L21
HPE DX1x0r Gen10 Intel Xeon-Gold 6244 (3.6 GH z/8-core/150 W) FIO processor kit	P18015-L21
HPE DX1x0r Gen10 Intel Xeon-Gold 6242 (2.8 GH z/16-core/150 W) FIO processor kit	P18014-L21
HPE DX1x0r Gen10 Intel Xeon-Gold 6240 (2.6 GH z/18-core/150 W) FIO processor kit	P18013-L21

Description	Option Part Number
HPE DX1x0r Gen10 Intel Xeon-Gold 6238 (2.1 GHz/22-core/140 W) FIO processor kit	P18012-L21
HPE DX1x0r Gen10 Intel Xeon-Gold 6234 (3.3 GHz/8-core/130 W) FIO processor kit	P18011-L21
HPE DX1x0r Gen10 Intel Xeon-Gold 6230 (2.1 GHz/20-core/125 W) FIO processor kit	P18010-L21
HPE DX1x0r Gen10 Intel Xeon-Gold 6226 (2.7 GHz/12-core/125 W) FIO processor kit	P18009-L21
HPE DX1x0r Gen10 Intel Xeon-Gold 5220 (2.2 GHz/18-core/125 W) FIO processor kit	P18008-L21
HPE DX1x0r Gen10 Intel Xeon-Gold 5218 (2.3 GHz/16-core/125 W) FIO processor kit	P18007-L21
HPE DX1x0r Gen10 Intel Xeon-Gold 5217 (3.0 GHz/8-core/115 W) FIO processor kit	P18006-L21
HPE DX1x0r Gen10 Intel Xeon-Gold 5215 (2.5 GHz/10-core/85 W) FIO processor kit	P18005-L21
HPE DX1x0r Gen10 Intel Xeon-Silver 4216 (2.1 GHz/16-core/100 W) FIO processor kit	P18004-L21
HPE DX1x0r Gen10 Intel Xeon-Silver 4215 (2.5 GHz/8-core/85 W) FIO processor kit	P18003-L21
HPE DX1x0r Gen10 Intel Xeon-Silver 4214 (2.2 GHz/12-core/85 W) FIO processor kit	P18002-L21
HPE DX1x0r Gen10 Intel Xeon-Silver 4210 (2.2 GHz/10-core/85 W) FIO processor kit	P18001-L21
HPE DX1x0r Gen10 Intel Xeon-Silver 4208 (2.1 GHz/8-core/85 W) FIO processor kit	P18000-L21
HPE DX1x0r Gen10 Intel Xeon-Platinum 8253 (2.2 GHz/16-core/125 W) FIO2 processor kit	P18018-B21
HPE DX1x0r Gen10 Intel Xeon-Gold 6252 (2.1 GHz/24-core/150 W) FIO2 processor kit	P18017-B21
HPE DX1x0r Gen10 Intel Xeon-Gold 6248 (2.5 GHz/20-core/150 W) FIO2 processor kit	P18016-B21

Description	Option Part Number
HPE DX1x0r Gen10 Intel Xeon-Gold 6244 (3.6 GHz/8-core/150 W) FIO2 processor kit	P18015-B21
HPE DX1x0r Gen10 Intel Xeon-Gold 6242 (2.8 GHz/16-core/150 W) FIO2 processor kit	P18014-B21
HPE DX1x0r Gen10 Intel Xeon-Gold 6240 (2.6 GHz/18-core/150 W) FIO2 processor kit	P18013-B21
HPE DX1x0r Gen10 Intel Xeon-Gold 6238 (2.1 GHz/22-core/140 W) FIO2 processor kit	P18012-B21
HPE DX1x0r Gen10 Intel Xeon-Gold 6234 (3.3 GHz/8-core/130 W) FIO2 processor kit	P18011-B21
HPE DX1x0r Gen10 Intel Xeon-Gold 6230 (2.1 GHz/20-core/125 W) FIO2 processor kit	P18010-B21
HPE DX1x0r Gen10 Intel Xeon-Gold 6226 (2.7 GHz/12-core/125 W) FIO2 processor kit	P18009-B21
HPE DX1x0r Gen10 Intel Xeon-Gold 5220 (2.2 GHz/18-core/125 W) FIO2 processor kit	P18008-B21
HPE DX1x0r Gen10 Intel Xeon-Gold 5218 (2.3 GHz/16-core/125 W) FIO2 processor kit	P18007-B21
HPE DX1x0r Gen10 Intel Xeon-Gold 5217 (3.0 GHz/8-core/115 W) FIO2 processor kit	P18006-B21
HPE DX1x0r Gen10 Intel Xeon-Gold 5215 (2.5 GHz/10-core/85 W) FIO2 processor kit	P18005-B21
HPE DX1x0r Gen10 Intel Xeon-Silver 4216 (2.1 GHz/16-core/100 W) FIO2 processor kit	P18004-B21
HPE DX1x0r Gen10 Intel Xeon-Silver 4215 (2.5 GHz/8-core/85 W) FIO2 processor kit	P18003-B21
HPE DX1x0r Gen10 Intel Xeon-Silver 4214 (2.2 GHz/12-core/85 W) FIO2 processor kit	P18002-B21
HPE DX1x0r Gen10 Intel Xeon-Silver 4210 (2.2 GHz/10-core/85 W) FIO2 processor kit	P18001-B21

NOTE:

Description	Option Part Number

- 2 processors are required.
- Mixing of 2 different processor models is not supported.
- When 2nd Generation Intel Xeon scalable processor is selected, then only DDR4-2933 memory kit can be selected.
- All HPE DX170r processors come with the high performance heatsink included.

Memory

Description	Option Part Number
Registered Dual In-line Memory Modules (RDIMMs) for 2nd Generation Intel Xeon scalable series	
HPE DX 16GB (1 x 16GB) single rank x4 DDR4-2933 CAS-21-21-21 registered smart FIO memory kit	P18448-B21
HPE DX 16GB (1 x 16GB) dual rank x8 DDR4-2933 CAS-21-21-21 registered smart FIO memory kit	P18449-B21
HPE DX 32GB (1 x 32GB) dual rank x4 DDR4-2933 CAS-21-21-21 registered smart FIO memory kit	P18450-B21
HPE DX 64GB (1 x 64GB) dual rank x4 DDR4-2933 CAS-21-21-21 registered smart FIO memory kit	P18453-B21
Load Reduced Dual In-line Memory Modules (LRDIMMs) for 2nd Generation Intel Xeon scalable series	
HPE DX 64GB (1 x 64GB) quad rank x4 DDR4-2933 CAS-21-21-21 load reduced smart FIO memory kit	P18451-B21
HPE DX 128GB (1 x 128GB) quad rank x4 DDR4-2933 CAS-24-21-21 load reduced smart FIO memory kit	P18454-B21

NOTE:

- Minimum 2 Dual In-line Memory Modules (DIMMs) are required per server; Up to 8 DIMMs per processor.

Description	Option Part Number
• DDR4 speed is the maximum memory speed of the processor. Actual memory speed m ay depend on the quantity and typeof DIMMs installed. • A maximum of 16 DIMMs are supported per DX170r server tray (Or 8 DIMMs max per processor). • LRDIMM and RDIMM are distinct memory technologies and cannot be mixed within a s erver. • HPE memory from previous generation servers is not compatible with this server. HPE SmartMemory is required to realizethe memory performance improvements and enhan ced functionality listed in this document for Gen10. For additional information,check th e below link for HPE SmartMemory QuickSpecs: **Click here to access the QuickSpecs page for HPE DDR4 SmartMemory**. • Depending on the memory configuration and processor model, the memory speed may run at 2666 MHz, 2400 MHz, and2133 MHz. Check the below link for memory populat ion table or the online memory configuration tool: **Click here to access the HPE Server Memory Configurator**.	

Adapters

Description	Option Part Number
FlexibleLOM adapters	
HPE DX Ethernet 10Gb 2-port 562FLR-T FIO ada pter	P18458-B21
HPE DX Ethernet 1Gb 4-port 366FLR FIO adapter	P18459-B21
HPE DX Ethernet 10/25Gb 2-port 640FLR-SFP28 FI O adapter	P18461-B21
Media module adapters	
HPE DX Ethernet 10Gb 2-port 568FLR-SFP+ media module FIO adapter	P19147-B21

Description	Option Part Number
HPE DX Ethernet 10Gb 2-port 568FLR-MMT FIO adapter	P19149-B21

Drives

Description	Option Part Number
Midline (MDL) - 12G SAS - Small Form Factor (SFF) drives	
HPE DX 2TB SAS 12G MDL 7.2K SFF (2.5 in) Smart Drive Carrier (SC) 1-year warranty 512e FIO Hard Disk Drive (HDD)	P17956-B21
MDL - 12G SAS - Large Form Factor (LFF) drives	
HPE DX 2TB SAS 12G MDL 7.2K LFF (3.5 in) Low Profile (LP) 1-year warranty digitally signed firmware FIO HDD	P17962-B21
HPE DX 4TB SAS 12G MDL 7.2K LFF (3.5 in) LP 1-year warranty digitally signed firmware FIO HDD	P17963-B21
HPE DX 6TB SAS 12G MDL 7.2K LFF (3.5 in) LP 1-year warranty 512e FIO HDD	P17964-B21
HPE DX 8TB SAS 12G MDL 7.2K LFF (3.5 in) LP 1-year warranty 512e digitally signed firmware FIO HDD	P17965-B21
HPE DX 12TB SAS 12G MDL 7.2K LFF (3.5 in) LP 1-year warranty helium 512e digitally signed firmware FIO HDD	P17966-B21
Solid State Drive (SSD) selection	
Read Intensive (RI) - SATA - LFF - SSDs	
HPE DX 1.92TB SATA 6G RI LFF (3.5 in) LPC 3-year warranty digitally signed firmware FIO SSD	P19093-B21

Description	Option Part Number
HPE DX 3.84TB SATA 6G RI LFF (3.5 in) LPC 3-year warranty digitally signed firmware FIO SSD	P19097-B21
HPE DX 3.84TB SATA 6G RI LFF (3.5 in) LPC 3-year warranty digitally signed firmware FIO SSD	P19134-B21
RI - SATA - SFF - SSDs	
HPE DX 1.92TB SATA 6G RI SFF (2.5 in) SC 3-year warranty digitally signed firmware FIO SSD	P17970-B21
HPE DX 3.84TB SATA 6G RI SFF (2.5 in) SC 3-year warranty digitally signed firmware FIO SSD	P18736-B21
HPE DX 3.84TB SATA 6G RI SFF (2.5 in) SC 3-year warranty digitally signed firmware FIO SSD	P19133-B21
Mixed Use (MU)- SATA - LFF SSD	
HPE DX 960GB SATA 6G MU LFF (3.5 in) LPC 3-yea r warranty digitally signed firmware FIO SSD	P19090-B21
HPE DX 1.92TB SATA 6G MU LFF (3.5 in) LPC 3-ye ar warranty digitally signed firmware FIO SSD	P18137-B21
HPE DX 960GB SATA 6G MU LFF (3.5 in) LPC 3-yea r warranty digitally signed firmware FIO SSD	P19099-B21
HPE DX 1.92TB SATA 6G MU LFF (3.5 in) LPC 3-ye ar warranty digitally signed firmware FIO SSD	P19132-B21
HPE DX 800GB SAS 12G MU LFF (3.5 in) LPC 3-yea r warranty digitally signed firmware FIO SSD	P18132-B21
HPE DX 1.6TB SAS 12G MU LFF (3.5 in) SCC 3-year warranty digitally signed firmware FIO SSD	P18135-B21
MU - SATA - SFF - SSD	
HPE DX 960GB SATA 6G MU SFF (2.5 in) SC 3-year warranty digitally signed firmware FIO SSD	P17968-B21
HPE DX 1.92TB SATA 6G MU SFF (2.5 in) SC 3-year warranty digitally signed firmware FIO SSD	P17969-B21
HPE DX 960GB SATA 6G MU SFF (2.5 in) SC 3-year warranty digitally signed firmware FIO SSD	P17973-B21

Description	Option Part Number
HPE DX 1.92TB SATA 6G MU SFF (2.5 in) SC 3-year warranty digitally signed firmware FIO SSD	P18054-B21
HPE DX 800GB SAS 12G MU SFF (2.5 in) SC 3-year warranty digitally signed firmware FIO SSD	P18056-B21
HPE DX 1.6TB SAS 12G MU SFF (2.5 in) SC 3-year warranty digitally signed firmware FIO SSD	P18057-B21

Rail kits

Description	Option Part Number
HPE 2U Gen9 hardware rail kit	822731-B21

HPE Support services

Description	Option Part Number
HPE 3-year next business day with Defective Media Retention (wDMR) DX2xx Gen10 hardware service	HG7A5E
HPE 3-year 24x7 DX2xx Gen10 hardware service	HG7A6E
HPE 3-year 24x7 wDMR DX2xx Gen10 hardware service	HG7A7E
HPE 5-year next business day DX2xx Gen10 hardware service	HG7A8E
HPE 5-year next business day wDMR DX2xx Gen10 hardware service	HG7A9E

Description	Option Part Number
HPE 5-year 24x7 DX2xx Gen10 hardware service	HG7B0E
HPE 5-year 24x7 wDMR DX2xx Gen10 hardware service	HN4W7E

New model specific parts lists

IMPORTANT: To obtain current part number information for a specific product model, use the Standard Models page for this product family.

.

- The product Standard Models page now links the model SKU numbers to the spare parts list for each model found on the **HPE PartSurfer web site**. (To report missing or incorrect parts information in PartSurfer, please use the "Contact us" and "Missing or incorrect data" links within the PartSurfer web site utility).
- To look up RoHS-compliant information in PartSurfer, use the component's option part number or the sales order number for a system in which the component is used (Available in the QuickSpecs or Standard Models page).

Mechanical components

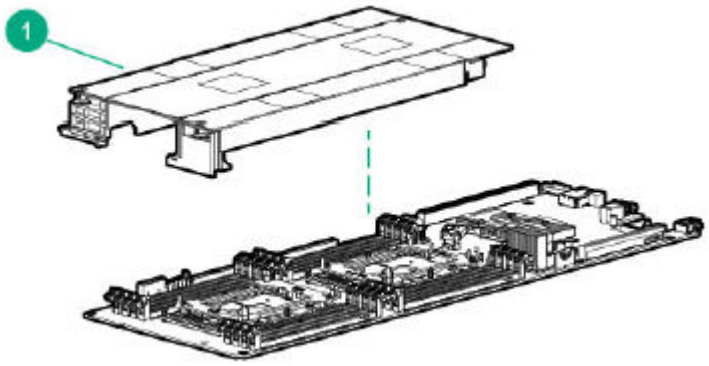

Item	Description
1	Air baffle

Air baffle

Description	Spare Part Number
Plastic Baffle Top XL170r Gen10	879858-001

System components

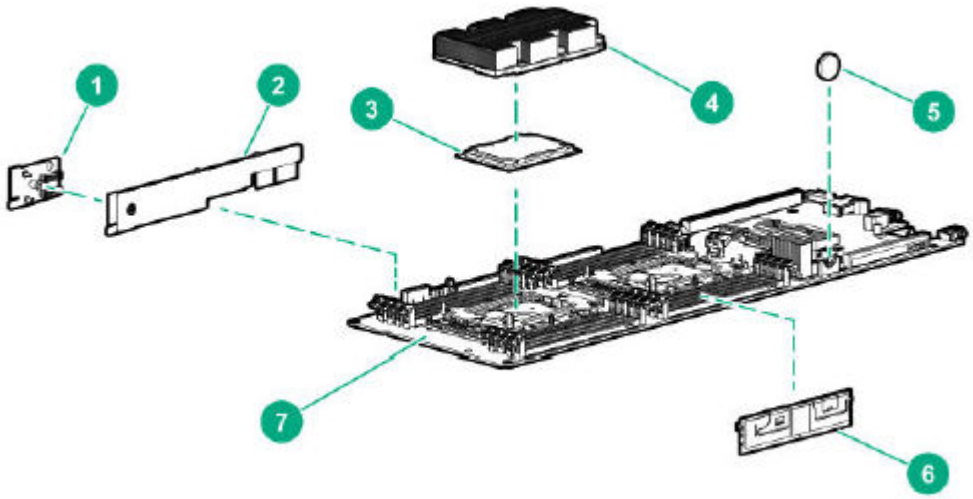

Item	Description
1	Small bayonet board
2	Large bayonet board
3	First-generation Intel Xeon Scalable Processor

Item	Description
	Second-generation Intel Xeon Scalable Processor
4	Heatsink
5	System battery
6	DIMM
7	System board assembly
8	System cable [1]

NOTE:

1. Not shown in the picture

Bayonet board

Description	Spare Part Number
HS Bayonet Board XL170r Gen10	879855-001
Bayonet Board XL1x0r Gen10	879845-001

First-generation Intel Xeon Scalable Processor

Description	Spare Part Number
Intel Xeon Bronze series processors	
Intel Xeon Bronze 3104 six-Core 64-bit processor - 1.70 GHz (Skylake), 8.25MB Level-3 cache, 85 W thermal design power (TDP), socket FCLGA3647	875709-001
Intel Xeon Bronze 3106 eight-Core 64-bit processor - 1.70GHz (Skylake), 11MB Level-3 cache, 85 watt thermal design power (TDP), socket FCLGA3647	875710-001

Description	Spare Part Number
Intel Xeon Silver series processors	
Intel Xeon Silver 4108 eight-Core 64-bit processor - 1.80 GHz (Skylake), 11MB Level-3 cache, 85 watt thermal design power (TDP), socket FCLGA3647	875712-001
Intel Xeon Silver 4109T eight-Core 64-bit processor - 2.0GHz (Skylake), 11MB Level-3 cache, 70 watt thermal design power (TDP), socket FCLGA3647	880185-001
Intel Xeon Silver 4110 eight-Core 64-bit processor - 2.10 GHz (Skylake), 11MB Level-3 cache, 85 watt thermal design power (TDP), socket FCLGA3647	875711-001
Intel Xeon Silver 4116 twelve-Core 64-bit processor - 2.10GHz (Skylake), 16.5MB Level-3 cache, 85 watt thermal design power (TDP), socket FCLGA3647	875716-001
Intel Xeon Silver 4114 Ten-Core 64-bit processor - 2.20GHz (Skylake), 13.75MB Level-3 cache, 85 watt thermal design power (TDP), socket FCLGA3647	875713-001
Intel Xeon Silver 4112 four-Core 64-bit processor - 2.60GHz (Skylake), 8.25MB Level-3 cache, 85 W thermal design power (TDP), socket FCLGA3647	875714-001
Intel Xeon Gold series processors	
Intel Xeon Gold 6138 twenty-core 64-bit processor - 2.0GHz (Skylake) 27.5MB Level-3 cache, 125 watt thermal design (TDP) power, socket FCLGA3647	874735-001
Intel Xeon Gold 6138F twenty-core 64-bit processor - 2.00GHz (Skylake), 27.5MB Level-3 cache, 135 watt thermal design power (TDP), socket FCLGA3647	878095-001
Intel Xeon-Gold 6130 sixteen cores, processor - 2.10GHz,(Skylake), 22MB Level-3 cache, 125 watt thermal design power (TDP), socket FCLGA3647	874736-001
Intel Xeon-Gold 6130F sixteen cores, processor - (Skylake) 2.10GHz, 22MB Level-3 cache, 135 watt thermal design power (TDP), socket FCLGA3647	878096-001
Intel Xeon-Gold 6152 twenty-two cores 64-bit processor - 2.10GHz, (Skylake) 30.25MB Level-3 cache	874730-001

Description	Spare Part Number
, 140 watt thermal design power (TDP), socket FC LGA3647	
Intel Xeon Gold 5120 Fourteen-Core 64-bit process or - 2.20GHz (Skylake) 19.25MB Level-3 cache, 105 watt thermal design power (TDP), socket FCLGA364 7	875718-001
Intel Xeon-G 6140 eighteen-Core 64-bit processor - 2.30GHz (Skylake), 24.75MB Level-3 cache, 140 watt thermal design power (TDP), socket FCLGA364 7	874734-001
Intel Xeon Gold 5118 twelve-Core 64-bit processor - 2.30GHz (Skylake) 16.5MB Level-3 cache, 105 watt thermal design power (TDP), socket FCLGA3647)	875717-001
Intel Xeon Gold 5115 ten-core 64-bit processor - 2. 40GHz (Skylake) 13.75MB Level-3 cache, 85 watt t hermal design power (TDP), socket FCLGA3647)	875715-001
Intel Xeon-Gold 6148 twenty cores, processor - 2.40 GHz (Skylake), 27.5MB Level-3 cache, 150 watt ther mal design power (TDP), socket FCLGA3647	874732-001
Intel Xeon Gold 6126 Twelve-Core 64-bit processo r - 2.60GHz (Skylake) 19.25MB Level-3 cache, 125 watt thermal design power (TDP), socket FCLGA364 7	875720-001
Intel Xeon Gold 6126F twelve-core 64-bit processo r - 2.60GHz (Skylake), 19.25MB Level-3 cache, 135 watt thermal design power (TDP), socket FCLGA364 7 [1]	878097-001
Intel Xeon Gold 6132 four-teen cores, processor - 2. 60GHz (Skylake). 19.25MB level3 cache, 140 watt t hermal design power (TDP), socket FCLGA3647	875722-001
Intel Xeon-Gold 6142 sixteen cores, processor - 2.6 0GHz, (Skylake) 22MB Level-3 cache, 150 watt ther mal design power (TDP), socket FCLGA3647	874733-001
Intel Xeon Gold 6136 twelve-core 64-bit processor - 3.0GHz (Skylake), 24.75MB Level-3 cache, 150 watt thermal design power (TDP), socket FCLGA3647	875724-001

Description	Spare Part Number
Intel Xeon Gold 6134 Eight-Core 64-bit processor - 3.20GHz (Skylake) 24.75MB Level-3 cache, 130 wat t thermal design power (TDP), socket FCLGA3647	875723-001
Intel Xeon Gold 6128 six-core 64-bit processor - 3.4 0GHz (Skylake), 19.25MB Level-3 cache, 115 watt t hermal design power (TDP), socket FCLGA3647	875721-001
Intel Xeon Gold 5122 four-Core 64-bit processor - 3 .60GHz (Skylake) 16.5MB Level-3 cache, 105 watt t hermal design power (TDP), socket FCLGA3647	875719-001
Intel Xeon Platinum series processors	
Intel Xeon Platinum 8153 Sixteen-Core 64-bit proc essor - 2.00GHz (Skylake), 22MB Level-3 cache, 12 5 watt thermal design power (TDP), socket FCLGA3 647	875728-001
Intel Xeon Platinum 8164 Twenty-six Core 64-bit p rocessor - 2.0GHz (Skylake), 35.7MB Level-3 cache , 150 watt thermal design power (TDP), socket FC LGA3647	875729-001
Intel Xeon Platinum 8160 Twenty-four Core 64-bit processor - 2.10GHz (Skylake), 33MB Level-3 cach e, 150 watt thermal design power (TDP), socket FC LGA3647	874729-001
Intel Xeon Platinum 8158 twelve core 64-bit process or - 3.0GHz (Skylake), 24.75MB Level-3 cache, 150 watt thermal design power (TDP), socket FCLGA364 7	875733-001
Intel Xeon Platinum 8156 four core 64-bit processo r - 3.60GHz (Skylake), 16.5MB Level-3 cache, 105 watt thermal design power (TDP), socket LGA 3647	875732-001

NOTE:

1. This processor model can be installed in processor 1 socket only

Second-Generation Intel Xeon scalable processor

Description	Spare Part Number
Intel Xeon Bronze series processor	
Intel Xeon 3204 v4 Six-Core 64-bit processor - 1.90 GHz (Cascade Lake, 8.25MB cache, 85 watt thermal design power (TDP), socket FCLGA3647)	P11604-001
Intel Xeon Silver series processors	
Intel Xeon Silver 4208 v4 Eight-Core 64-bit processor - 2.10 GHz (Cascade Lake, 11MB cache, 85 watt thermal design power (TDP), socket FCLGA3647)	P11605-001
Intel Xeon Silver 4216 Sixteen-Core 64-bit processor - 2.10 GHz (Cascade Lake, 22MB cache, 100 watt thermal design power (TDP), socket FCLGA3647)	P11609-001
Intel Xeon Silver 4210 v4 Ten-Core 64-bit processor - 2.20 GHz (Cascade Lake, 13.75MB cache, 85 watt thermal design power (TDP), socket FCLGA3647)	P11606-001
Intel Xeon Silver 4214 v4 Twelve-Core 64-bit processor - 2.20 GHz (Cascade Lake, 16.5MB cache, 85 watt thermal design power (TDP), socket FCLGA3647)	P11607-001
Intel Xeon Silver 4215 v4 Eight-Core 64-bit processor - 2.50 GHz (Cascade Lake, 11MB cache, 85 watt thermal design power (TDP))	P11608-001
Intel Xeon Gold series processors	
Intel Xeon Gold CLX 6230 Twenty-Core 64-bit processor - 2.10 GHz (Cascade Lake , 27.5MB cache, Intel QuickPath interconnect (QPI) speed 8.0 GT/s, 125 watt thermal design power (TDP), socket FCLGA3647)	P11614-001
Intel Xeon Gold 6238 v4 Twenty Two-Core 64-bit processor - 2.10 GHz (Cascade Lake, 30MB cache, 140 watt thermal design power (TDP), socket FCLGA3647)	P12010-001
Intel Xeon Gold 6252 v4 Twenty Four-Core 64-bit processor - 2.10 GHz (Cascade Lake, 22MB cache, 150 watt thermal design power (TDP), socket LGA-3647)	P11619-001

Description	Spare Part Number
Intel Xeon Gold 5220 v4 Eighteen-Core 64-bit processor - 2.20 GHz (Cascade Lake, 24.75MB cache, 125 watt thermal design power (TDP), socket FCLGA2011-3)	P11613-001
Intel Xeon Gold 5218 v4 Sixteen-Core 64-bit processor - 2.30 GHz (Cascade Lake, 22MB cache, 125 watt thermal design power (TDP), socket FCLGA3647)	P11612-001
Intel Xeon Gold 5215 v4 Ten-Core 64-bit processor - 2.60 GHz (Cascade Lake, 20MB cache, 85 watt thermal design power (TDP), socket LGA-3647)	P11610-001
Intel Xeon Gold 6248 v4 Twenty-Core 64-bit processor - 2.50 GHz (Cascade Lake, 27.5MB cache, 150 watt thermal design power (TDP), socket FCLGA3647)	P11618-001
Intel Xeon Gold CLX 6240 v4 Eighteen-Core 64-bit processor - 2.60 GHz (Cascade Lake, 24.75MB cache, 150 watt thermal design power (TDP), socket LGA-3647)	P11615-001
Intel Xeon Gold 6226 v4 Twelve-Core 64-bit processor - 2.70 GHz (Cascade Lake, 19MB cache, 125 watt thermal design power (TDP))	P12008-001
Intel Xeon Gold 6242 v4 Sixteen-Core 64-bit processor - 2.80 GHz (Cascade Lake, 22MB cache, 150 watt thermal design power (TDP), socket LGA-3647)	P11616-001
Intel Xeon Gold 5217 v4 Eight-Core 64-bit processor - 3.00 GHz (Cascade Lake, 11MB cache, 115 watt thermal design power (TDP), socket FCLGA3647)	P11611-001
Intel Xeon Gold 6234 v4 Eight-Core 64-bit processor - 3.30 GHz (Cascade Lake, 25MB cache, 130 watt thermal design power (TDP), socket FCLGA3647)	P12009-001
Intel Xeon Gold CLX 6244 Eight-Core 64-bit processor - 3.60 GHz (Cascade Lake , 24.75MB cache, Intel QuickPath interconnect (QPI) speed 8.0 GT/s, 150 watt thermal design power (TDP), socket FCLGA3647)	P11617-001

Description	Spare Part Number
Intel Xeon Gold 5222 v4 Four-Core 64-bit processor - 3.80 GHz (Cascade Lake, 16.5MB cache, 105 watt thermal design power (TDP), socket LGA-3647)	P11632-001
Intel Xeon Platinum series processors	
Intel Xeon Gold 8253 v4 Sixteen-Core 64-bit processor - 2.20 GHz (Cascade Lake, 22MB cache, 125 watt thermal design power (TDP))	P12011-001

Heatsink

Description	Spare Part Number
Heatsink Processor1 XL1x0r Gen10	879851-001
Heatsink processor-2 XL1x0r Gen10	879852-001

System battery

Description	Spare Part Number
Battery for real-time clock (RTC) - 3.0V, 220mAh, lithium coin cell, 20mm diameter, 3.2mm height (CR2032)	319603-001

DIMM

Description	Spare Part Number
PC4-2666V DIMM	
8GB PC4-2666V-R, registered Synchronous Dynamic Random Access Memory (SDRAM) 1Gx8, Dual Data Rate (DDR4) mode, Dual In-Line Memory Module (DIMM) organized as 1Gx72	850879-001

Description	Spare Part Number
16Gb PC4-2666V-R Synchronous Dynamic Random Access Memory (SDRAM) 1Gx8, operated in Dual Data Rate (DDR4) mode, Dual In-Line Memory Module (DIMM), 2Gx72	868846-001
16GB PC4-2666V-R, registered synchronous dynamic random access memory (SDRAM) 2Gx4, operated in a dual data rate (DDR4) mode, packaged in a dual in-line memory module organized as 2Gx72	850880-001
32GB PC4-2666V-R, registered synchronous dynamic random access memory (SDRAM) 2Gx4, operated in a dual data rate (DDR4) mode, packaged in a dual in-line memory module organized as 4Gx72	850881-001
8GB PC4-2666V-R - synchronous dynamic random access memory (SDRAM), dual data rate (DDR4) mode, dual in-line memory module (DIMM), organized as 1Gx72	878490-001
PC4-2933Y DIMM	
HPE 8GB (1x8GB) Single Rank x8 DDR4-2933 CAS-21-21-21 Registered Smart Memory Kit	P06186-001
16GB, Single Rank x4, DDR4-2933, CAS-21-21-21, Registered Smart Memory Kit	P06187-001
HPE 16GB (1x16GB) Dual Rank x8 DDR4-2933 CAS-21-21-21 Registered Smart Memory Kit	P06188-001
DIMM 32GB PC4-2933Y-R 2Gx4 Kit	P06189-001
HPE 64GB (1x64GB) Dual Rank x4 DDR4-2933 CAS-21-21-21 Registered Smart Memory Kit	P06192-001
64GB, Quad Rank x4, DDR4-2933, CAS-21-21-21, Load Reduced Smart Memory Kit	P06190-001

System board assembly

Description	Spare Part Number
System Board XL1x0r Gen10	879847-001

Description	Spare Part Number
Main Board XL1x0r Gen10 for CLX	P11391-001

System cable

Description	Spare Part Number
R2600 cable kit Gen10	879838-001
R2800 cable kit G10	879840-001

Server options

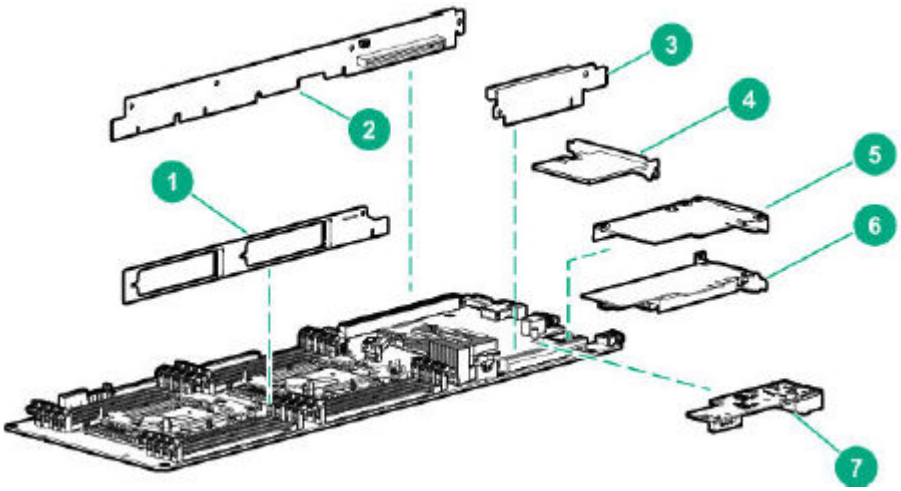

Item	Description
1	M.2 SSD riser board
2	Secondary riser board
3	Primary riser board

Item	Description
4	Omni-Path adapter
5	Ethernet adapter InfiniBand adapter
6	Smart Array controller
7	Media Module adapter
8	HPE Trusted Platform Module 2.0 [1]
9	SUV cable [1]
10	OPA adapter cable [1]
11	Smart Array controller cable [1]

NOTE:

1. Not shown in the picture

M.2 SSD riser board

Description	Spare Part Number
Performance and Coverage Analyser (PCA), Next Generation Form Factor (NGFF) Riser M2 XL1x0r Gen10	879849-001

Secondary riser board

Description	Spare Part Number
PCA FLOM Riser XL170r Gen10	879854-001
PCA P1 low profile (LP) Riser XL170r Gen10	879856-001

Description	Spare Part Number
P2 low profile (LP) riser XL170r Gen10	879857-001

Primary riser board

Description	Spare Part Number
Left LP riser XL1x0r	879846-001

Description	Spare Part Number
OPath Fabric-Carrier XL1x0r Gen10	879850-001
Omni-Path Adapter 1x Quad Small Form-factor Pluggable 28 (QSFP28) - Low-profile PCIe Gen3 x1	841703-001
100Gb 1-port OP101 Quad Small Form-factor Pluggable (QSFP28) - x8 PCIe Gen3 with Intel Omni-Path architecture adapter	841702-001

InfiniBand adapter

Description	Spare Part Number
InfiniBand Fourteen Data Rate (FDR)/Ethernet FlexibleLOM - 10Gb/40Gb 2-port 544+ Quad Small Form-factor Pluggable (QSFP) adapter	764736-001
PCA InfiniBand FDR/Ethernet 10Gb/40Gb 2-port 544+FLR-QSFP (FlexibleLOM) adapter -ConnectX-3 Pro architecture, InfiniBand bandwidth up to 56 Gb/s (FDR), Ethernet bandwidth up to 40 Gb/s, PCIe 3.0	779132-001
Performance and Coverage Analyse (PCA), Adapter 1P 841 Quad-Small Form-Factor Pluggable (QSFP) 28 100Gb	878578-001

Description	Spare Part Number
InfiniBand Enhanced Data Rate (EDR)/Ethernet 100 Gb 2-port 841QSFP28 adapter	878579-001
HPE InfiniBand FDR/Ethernet 40/50Gb 2-port 547F LR-QSFP Adapter	879667-001
840 Quad Small Form-factor Pluggable (QSFP28) 1 00GB adapter - InfiniBand (IB), Enhanced Data Rate/ Ethernet (EDR/EN), 1-port	828107-001
840 Quad Small Form-factor Pluggable (QSFP28) 1 00GB adapter - InfiniBand (IB), Enhanced Data Rate/ Ethernet (EDR/EN), 2-port	828108-001

Ethernet adapter

Description	Spare Part Number
NIC G3 1p 100Gbe QSFP28 Adapter	877697-001

Smart Array controller

Description	Spare Part Number
Smart Array E208i-p SR controller - SAS/SATA inter face, 8-SAS lanes across 2 x4 internal Mini-SAS por ts, No flash-backed write cache, 12Gb/s SAS, 6Gb/s SATA,PCI Express 3.0 x8 link, RAID 0, 1, 5, 10	836266-001
Smart Array E208e-p SR Controller - SAS/SATA inte rface, 8-SAS lanes across (no flash-backed write cac he) 2 x4 external Mini-SAS ports, 12Gb/s SAS, 6Gb/s SATA,PCI Express 3.0 x8 link, RAID 0, 1, 5, 10	836267-001
Smart Array P408i-p SR modular controller - 12 G b/s SAS, 6 Gb/s SATA and PCIe 3.0x8, 8-SAS 2x4 in ternal Mini-SAS lanes, 2GB flash-backed write cache, RAID 0, 1, 5, 6, 10, 50, 60, 1 ADM, 10 ADM (Advanc ed Data Mirroring)	836269-001

Description	Spare Part Number
Smart Array P408e-a SR modular controller - 12G b/s SAS, 6Gb/s SATA and PCIe 3.0x8, 8-SAS 2x4 inte rnal Mini-SAS lanes, 4GB flash-backed write cache, R AID 0, 1, 5, 6, 10, 50, 60, 1 ADM, 10 ADM (Advance d Data Mirroring)	836270-001

Media Module adapter

Description	Spare Part Number
Performance and Coverage Analyser (PCA) modula r LAN on motherboard (mLOM) 10Gbase-T XL1x0r Gen10	879848-001
Ethernet 1Gb 2-port 368FLR-T (flexible LOM rack) media module adapter	872161-001
Ethernet 10Gb 2-port 568FLR-SFP+ (flexible LOM rack) (small form factor pluggable) media module ad apter	872162-001

HPE Trusted Platform Module 2.0

Description	Spare Part Number
Trusted Platform Module (TPM) - Compatible with H PE Gen10 Servers Running ********* Windows Server 2012 R2 or newer, supports TPM 1.2 (UEFI AND Le gacy mode) and 2.0 (UEFI mode)	872159-001

SUV cable

Description	Spare Part Number
Local I/O diagnostic Serial, USB, and Video (SUV) co nnector cable dongle - Has 36-pin blade server conn ector to DB-9 serial port cable, 2-USB port cable, an	416003-001

Description	Spare Part Number
d DB-15 port video cable - For blade server administ ration, configuration and diagnostic procedures	

OPA adapter

Description	Spare Part Number
Cable kit - Mother Board Signal Fabric XL1x0r Gen1 0	P01290-001

Smart Array controller cable

Description	Spare Part Number
Xl170R cable kit G10	879853-001

OS Compatibility

Feature	Description
Operating Systems (OS) and virtualization software	• **Nutanix Acropolis Operating System (AOS):** Version 5.10.5 and higher • **Nutanix AHV:** Version 2017030.279 and higher • **VMware vSphere:** Version 6.5 U2

NOTE:

Feature	Description
	The latest version of AOS and AHV are pre-installed in each server at the factory. vSphere must be installed separately.

Software Compatibility

- Active Health System (AHS)
- AHS Viewer
- Smart update
- iLO Amplifier pack
- HPE iLO Mobile application
- RESTful Interface tool
- Scripting tools
- HPE OneView standard
- HPE Systems Insight Manager (HPE SIM)