RETIRED: This document has been officially retired, and the base products listed herein are now considered obsolete and are no longer available for sale. Consequently, the information contained within may no longer be current. This document is provided exclusively for reference and informational purposes.

Overview

HPE ProLiant DX170r Gen10 server

The HPE ProLiant DX170r Gen10 server along with Nutanix provide a global partnership to deliver hyper-converged solutions in an on premise appliance or through the HPE Greenlake consumption model. This offering will leverage Nutanix's free AHV hypervisor and Nutanix Enterprise Cloud software to provide customers with a pre-integrated and optimized solution that dramatically lowers total cost of ownership and accelerates operational productivity.

The ProLiant DX170r Gen10 Server is a 1U half-width, 2P server with configuration options for:

- Performance and efficient CPUs -- Intel Xeon Scalable Family series processor options ranging from Silver to Platinum with choices from 8-24 Cores, 1.7GHz – 3.8GHz CPU speed, and power ratings between 85-150 Watts
- 16 memory DIMM slots, DDR4 2933 MT/s HPE SmartMemory.

The HPE ProLiant DX2000 series chassis accommodates 4 independently serviceable ProLiant DX170r Gen10 servers with up to 80 servers in a 42U rack with 1 to 4 servers per chassis.

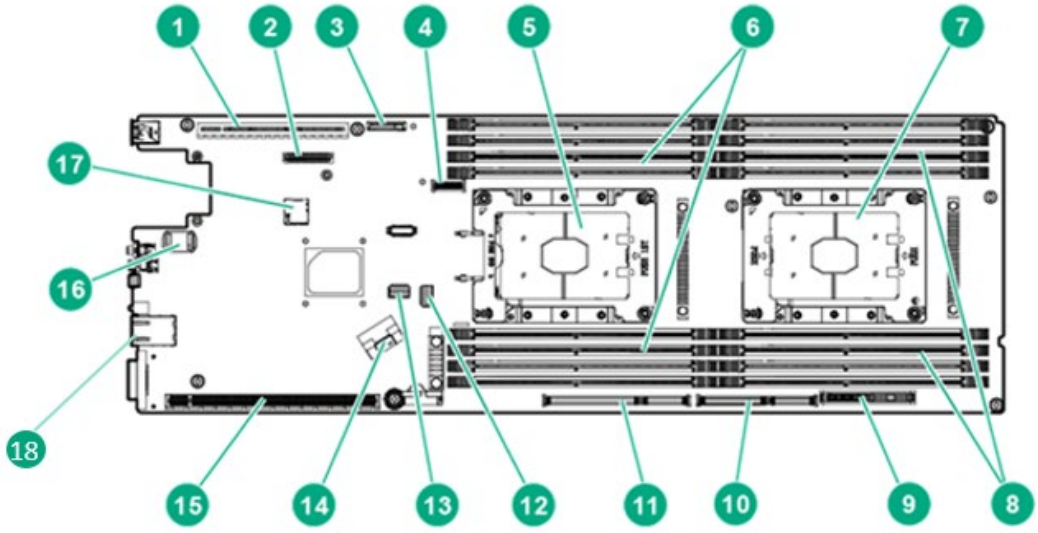

Front View

Item	Description	Item	Description
1	Primary riser slot 1	10	Secondary riser slot 4
2	mLOM connector	11	Secondary riser slot 3
3	System battery	12	Slimline connector (SATA x4)
4	M.2 SSD riser connector	13	System maintenance switch
5	Processor 1	14	Slimline connector (SATA x8)
6	DIMMs for processor 1	15	Secondary riser slot 2
7	Processor 2	16	TPM connector
8	DIMMs for processor 2	17	microSD slot
9	Bayonet board slot	18	iLO dedicated port

Overview

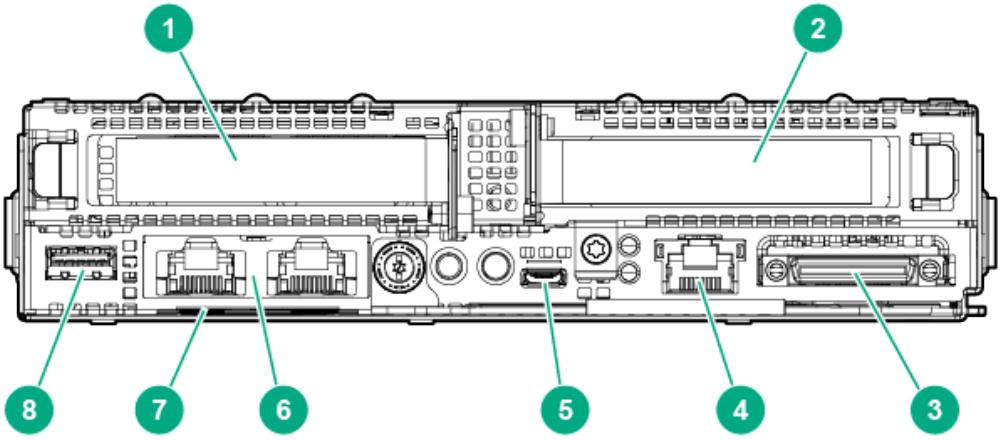

Rear View

Item	Description	Item	Description
1	Primary riser (slot1)	5	iLO service port with micro USB connector
2	Secondary riser (slot2)	6	Media module
3	SUV connector	7	Node serial number and iLO label pull tab
4	ILO Management Port	8	USB 3.0 connector

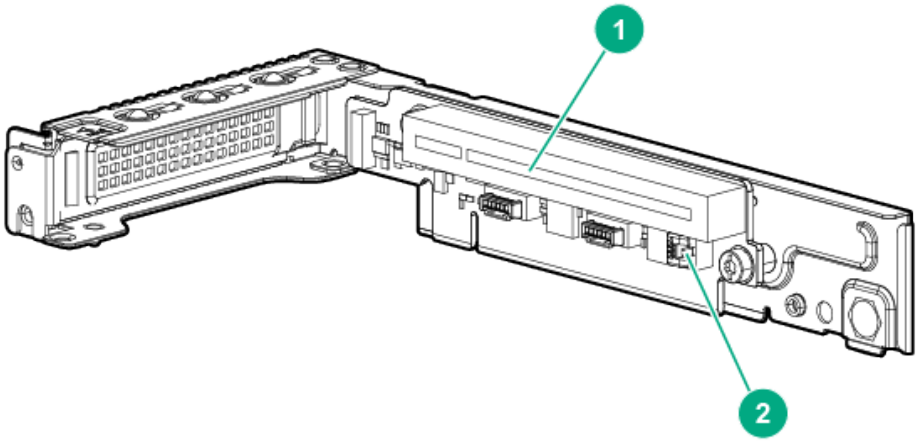

Single-slot left PCI riser cage assembly

Item	Description	Slot number	Slot description
1	Storage controller	1	PCIe3 x16 for Processor 1
2	N/A	N/A	Storage backup power connector

Notes: This riser and the HPE Smart Array E208i-a SR Gen10 Controller are included with each HPE ProLiant DX170r server.

Overview

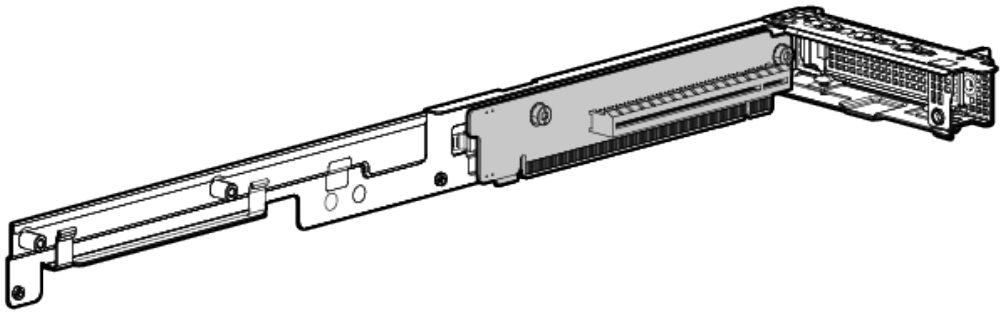

FlexibleLOM 1U node riser cage assembly

Form factor	Slot number	Slot description
FlexibleLOM	FlexibleLOM slot	PCIe3 x16 for Processor 1

Notes: This riser is included with each HPE ProLiant DX170r server.

Standard Features

Processors

2nd Generation Intel® Xeon® Scalable Processor Family

Processors Intel Xeon Models	CPU Frequency	Cores	L3 Cache	Power	QPI	DDR4/ MT/s	Memory per socket
Platinum 8253 Processor	2.2 GHz	16	22 MB	125W	3 @ 10.4 GT/s	2933 MT/s	1 TB
Gold 6252 Processor	2.1 GHz	24	35.75 MB	150W	3 @ 10.4 GT/s	2933 MT/s	1 TB
Gold 6248 Processor	2.5 GHz	20	27.50 MB	150W	3 @ 10.4 GT/s	2933 MT/s	1 TB
Gold 6244 Processor	3.6GHz	8	24.75 MB	150W	3 @ 10.4 GT/s	2933 MT/s	1 TB
Gold 6242 Processor	2.8 GHz	16	22.00 MB	150W	3 @ 10.4 GT/s	2933 MT/s	1 TB
Gold 6240 Processor	2.6 GHz	18	24.75 MB	150W	3 @ 10.4 GT/s	2933 MT/s	1 TB
Gold 6238 Processor	2.1 GHz	22	30.25 MB	140W	3 @ 10.4 GT/s	2933 MT/s	1 TB
Gold 6234 Processor	3.3 GHz	8	24.75 MB	130W	3 @ 10.4 GT/s	2933 MT/s	1 TB
Gold 6230 Processor	2.1 GHz	20	27.50 MB	125W	3 @ 10.4 GT/s	2933 MT/s	1 TB
Gold 6226 Processor	2.7 GHz	12	19.25 MB	125W	3 @ 10.4 GT/s	2933 MT/s	1 TB
Gold 5220 Processor	2.2 GHz	18	24.75 MB	125W	2 @ 10.4 GT/s	2666 MT/s	1 TB
Gold 5218 Processor	2.3 GHz	16	22 MB	125W	2 @ 10.4 GT/s	2666 MT/s	1 TB
Gold 5217 Processor	3.0 GHz	8	11 MB	115W	2 @ 10.4 GT/s	2666 MT/s	1 TB
Gold 5215 Processor	2.5 GHz	10	11 MB	85W	2 @ 10.4 GT/s	2666 MT/s	1 TB
Silver 4216 Processor	2.1 GHz	16	22 MB	100W	2 @ 10.4 GT/s	2400 MT/s	1 TB
Silver 4215 Processor	2.5 GHz	8	11 MB	85W	2 @ 10.4 GT/s	2400 MT/s	1 TB
Silver 4214 Processor	2.2 GHz	12	16.5 MB	85W	2 @ 10.4 GT/s	2400 MT/s	1 TB
Silver 4210 Processor	2.2 GHz	10	13.75 MB	85W	2 @ 10.4 GT/s	2400 MT/s	1 TB
Silver 4208 Processor	2.1 GHz	8	11 MB	85W	2 @ 10.4 GT/s	2400 MT/s	1 TB

Chipset

- HPE iLO 5 ASIC.
- Intel® C622 Chipset (Intel EY82C622 PCH)

Notes: For more information regarding Intel® chipsets, please see the following URL:
http://www.intel.com/products/server/chipsets/

On System Management Processor

HPE iLO 5 ASIC.
Notes: Read and learn more in the **iLO QuickSpecs**

Memory	
Type	HPE SmartMemory
	DDR4 Load Reduced (LRDIMM), or Registered (RDIMM)
DIMM Slots Available	16 DIMM Slots available
Maximum (LRDIMM) (per server tray)	2TB, 2nd Generation Intel® Xeon® Scalable Processor

Notes:

- HPE memory from previous generation servers are not fully compatible with the HPE ProLiant DX170r Gen10 server.
- To realize the performance memory capabilities listed in this document, HPE SmartMemory is required.
- LRDIMM and RDIMM are distinct memory technologies and cannot be mixed within a server.
- The maximum memory speed is a function of the memory type, memory configuration, and processor model. Please see Memory Population Table or the Online Memory Configuration Tool at:
  http://www.hpe.com/servers/servermemoryconfigurator
- Memory DIMM availability with a server platform is dependent upon completion of certification testing.

Standard Features

Memory Protection

For details on the HPE Server Memory Options RAS feature, visit:
http://www.hpe.com/docs/memory-ras-feature.

Expansion Slots (EE)					
Expansion Slot #	**Technology**	**Bus Width***	**Source**	**Connector Width**	**Form Factor**
1	PCIe 3.0	x16	CPU1	x16	Low profile
FlexibleLOM	PCIe 3.0	x16	CPU1	x16	FlexibleLOM

Notes:

- *Indicates the number of physical electrical lanes running to the connector.
- Expansion slot 1 is preconfigured with the HPE XL1x0r Gen10 Left LP Riser Kit and HPE Smart Array E208i-p SR Gen10 Controller.
- Expansion slot 2 is preconfigured with the HPE DX170r Gen10 FLOM Riser Kit, customers can select from the FLOM network adapters available for the HPE ProLiant DX170r.

Internal Hard Drives

None, drives are selected with the server but installed in the HPE ProLiant DX2000 Chassis

HPE ProLiant DX2200 12LFF Hard Drive Configurations

- **Hybrid SSD/HDD:** 1 SSD and 2 HDD per server

HPE ProLiant DX2600 24SFF Hard Drive Configurations

- **Hybrid SSD/HDD:** 2 SSD and 4 HDD per server
- **All SSD:** 2, 4, or 6 per server

Notes: SAS and SATA SSDs cannot be mixed

Interfaces	
FlexibleLOM	HPE ProLiant Gen10 servers offer a new networking technology-Flexible Network Technology. The HPE ProLiant Gen10 server offers the customer the choice of 1Gigabit, 10Gigabit, 25 Gigabit, FlexibleLOM solutions depending on workload. For further details on the choices, see FlexibleLOM in the Networking Section of this document.
KVM	Serial USB Video Port (SUV)
USB Ports	2 (external via SUV); 1 USB 3.0 (external);
HPE iLO Remote Management Network Port	Aggregated via HPE ProLiant DX2000 Chassis; Option for dedicated NIC IM Board Kit
Health LED	1
Power	1
UID	1
Do not remove LED	1

Operating Systems and Virtualization Software

Nutanix Acropolis Operating System (AOS): Version 5.10.5 and higher
Nutanix Acropolis Hypervisor (AHV): Version 2017030.279 and higher
VMware vSphere: Version 6.5 U2, 6.5 U3, 6.7 U3
Notes: The latest version of AOS and AHV are pre-installed in each server at the factory. vSphere must be installed separately.

Standard Features

Industry Standard Compliance

- ACPI 6.2 Compliant
- PCIe 3.0 Compliant
- WOL Support
- Microsoft® Logo certifications
- PXE Support
- USB 3.0 Compliant (internal); USB 2.0 Compliant (external ports via SUV)
- SMBIOS 3.1
- UEFI 2.6
- Redfish API

Power Specifications

The HPE ProLiant DX2000 server chassis come preconfigured with two (2) HPE 1800W-2200W Flex Slot Platinum Hot Plug Power Supplies.
To review typical system power ratings use the HPE Power Advisor which is available via the online tool located at URL:
http://www.hpe.com/servers/powersupplies
Notes: Power Specification and Technical Content for supported power supplies can be found at:
https://www.hpe.com/info/qs

Graphics

Integrated Matrix G200 video standard

- 1280 x 1024 (32 bpp)
- 1920 x 1200 (16 bpp)
- HPE iLO 5 On System Management Memory
- 32 MB Flash
- 512 MB DDR 3 with ECC (112 MB after ECC and video

Form Factor

The ProLiant DX170r Gen10 Server is a half width tray for the HPE ProLiant DX2000 Chassis

Embedded Management

HPE Integrated Lights-Out (HPE iLO)

Monitor your servers for ongoing management, service alerting, reporting and remote management with HPE iLO.
Learn more at: **http://www.hpe.com/info/ilo**
Notes: iLO Advanced license with 3 years support is included with each HPE DX170r server.

iLO RESTful API

iLO RESTful API is Redfish API conformance and offers simplified server management automation such as configuration and maintenance tasks based on modern industry standards. Learn more at: **http://www.hpe.com/info/restfulapi**

Server Utilities

Active Health System

The HPE Active Health System (AHS) is an essential component of iLO management portfolio that provides continuous, proactive health monitoring of HPE servers. Learn more at: **https://www.hpe.com/servers/ahs**

Active Health System Viewer

Use the Active Health System Viewer, a web-based portal, to easily read AHS logs and speed problem resolution with HPE self-repair recommendations. Learn more at **http://www.hpe.com/servers/ahsv**

Standard Features

Smart Update
Keep your servers up to date with HPE's Smart Update solution by using Smart Update Manager (SUM) to optimize the firmware and driver updates of the Service Pack for ProLiant (SPP)

iLO Amplifier Pack
Designed for large enterprise and service provider environments with hundreds of HPE servers, the iLO Amplifier Pack is a free, downloadable open virtual application (OVA) that delivers the power to discover, inventory and update Gen8, Gen9 and Gen10 HPE servers at unmatched speed and scale. Use with an iLO Advanced License to unlock full capabilities.
http://www.hpe.com/servers/iLOamplifierpack

HPE iLO Mobile Application
Enables the ability to access, deploy, and manage your server anytime from anywhere from select smartphones and mobile devices. **http://www.hpe.com/info/ilo/mobileapp**

RESTful Interface Tool
RESTful Interface tool (iLOREST) is a single scripting tool to provision using iLO RESTful API to discover and deploy servers at scale. **http://www.hpe.com/info/resttool**

Scripting tools
Provision 1 to many servers using your own scripts to discover and deploy with Scripting Toolkit (STK) for Windows and Linux or Scripting Tools for Windows PowerShell. **http://www.hpe.com/servers/powershell**

HPE OneView Standard
HPE OneView Standard can be used for inventory, health monitoring, alerting, and reporting without additional fees. It can monitor multiple HPE Servers generations. The user interface is similar to the HPE OneView Advanced version, but the software-defined functionality is not available. **http://www.hpe.com/info/oneview**

HPE Systems Insight Manager (HPE SIM)
Ideal for environments already using HPE SIM, it allows you to monitor the health of your HPE ProLiant Servers and HPE Integrity Servers. Also provides you with basic support for non-HPE servers. HPE SIM also integrates with Smart Update Manager to provide quick and seamless firmware updates. **www.hpe.com/info/hpesim**

Server Management
HPE iLO Advanced
HPE iLO Advanced licenses offer smart remote functionality without compromise, for all HPE ProLiant servers. The license includes the full integrated remote console, virtual keyboard, video, and mouse (KVM), multi-user collaboration, console record and replay, and GUI-based and scripted virtual media and virtual folders. You can also activate the enhanced security and power management functionality. **http://www.hpe.com/servers/iloadvanced**
Notes: iLO Advanced license with 3 years support is included with each HPE DX170r server.

HPE OneView Advanced
HPE OneView brings a new level of automation to infrastructure management by taking a template driven approach to provisioning, updating, and integrating compute, storage, and networking infrastructure. It provides full-featured licenses which can be purchased for managing Gen9 and Gen10 servers. **http://www.hpe.com/info/oneview**

Standard Features

HPE Performance Cluster Management (HPCM)

HPE Performance Cluster Manager is a fully integrated system management solution offering all the functionalities you need to manage your Linux®-based high performance computing (HPC) clusters. The software provides system setup, hardware monitoring and management, image management and software updates as well as power management for systems of any scale - up to 100,000 nodes. **http://www.hpe.com/software/hpcm**

HPE Performance Software—Message Passing Interface

The HPE Performance Software—**Message Passing Interface (MPI)** is an MPI development environment designed to enable the development and optimization of high performance computing (HPC) applications. The HPE Performance Software—MPI leverages a scalable MPI library and boosts performance of existing applications without requiring recompilation.

Security

- Immutable Silicon Root of Trust
- Support for Commercial National Security Algorithms (CNSA)
- Granular control over iLO interfaces
- Common Access Card (CAC) 2-factor Authentication
- Tamper-free updates – components digitally signed and verified
- Secure Recovery – recover critical firmware to known good state on detection of compromised firmware
- Intrusion Security Kit option
- Runtime Firmware Validation – Periodically scan essential firmware for compromised code during runtime

Warranty

This product is covered by a global limited warranty and supported by Hewlett Packard Enterprise Services and a worldwide network of Hewlett Packard Enterprise Authorized Channel Partners (may vary by region). Hardware diagnostic support and repair is available for three years from date of purchase. Support for software and initial setup is available for 90 days from date of purchase. Enhancements to warranty services are available through HPE Pointnext operational services or customized service agreements. Hard drives have either a one year or three year warranty.

Notes: Server Warranty includes 3 year Parts, 3 year Labor, 3-year on-site support with next business day response. Warranty repairs may be accomplished through the use of Customer Self Repair (CSR) parts. These parts fall into two categories: 1) Mandatory CSR parts are designed for easy replacement. A travel and labor charge will result when customers decline to replace a Mandatory CSR part; 2) Optional CSR parts are also designed for easy replacement but may involve added complexity. Customers may choose to have Hewlett Packard Enterprise replace Optional CSR parts at no charge. Additional information regarding worldwide limited warranty and technical support is available at:
http://www.hpe.com/support/ProLiantServers-warranties

Service and Support

HPE Pointnext - Service and Support

Get the most from your HPE Products. Get the expertise you need at every step of your IT journey with **HPE Pointnext Services**. We help you lower your risks and overall costs using automation and methodologies that have been tested and refined by HPE experts through thousands of deployments globally. HPE Pointnext **Advisory Services**, focus on your business outcomes and goals, partnering with you to design your transformation and build a roadmap tuned to your unique challenges. Our **Professional** and **Operational Services** can be leveraged to speed up time-to-production, boost performance and accelerate your business. HPE Pointnext specializes in flawless and on-time implementation, on-budget execution, and creative configurations that get the most out of software and hardware alike.

Consume IT on your terms

HPE GreenLake brings the cloud experience directly to your apps and data wherever they are—the edge, colocations, or your data center. It delivers cloud services for on-premises IT infrastructure specifically tailored to your most demanding workloads. With a pay-per-use, scalable, point-and-click self-service experience that is managed for you, HPE GreenLake accelerates digital transformation in a distributed, edge-to-cloud world.

- Get faster time to market
- Save on TCO, align costs to business
- Scale quickly, meet unpredictable demand
- Simplify IT operations across your data centers and clouds

Managed services to run your IT operations

HPE GreenLake Management Services provides services that monitor, operate, and optimize your infrastructure and applications, delivered consistently and globally to give you unified control and let you focus on innovation.

Recommended Services

HPE Pointnext Tech Care.

HPE Pointnext Tech Care is the new operational service experience for HPE products. Tech Care goes beyond traditional support by providing access to product specific experts, an AI driven digital experience, and general technical guidance to not only reduce risk but constantly search for ways to do things better. HPE Pointnext Tech Care has been reimagined from the ground up to support a customer-centric, AI driven, and digitally enabled customer experience to move your business forward. HPE Pointnext Tech Care is available in three response levels. Basic, which provides 9x5 business hour availability and a 2 hour response time. Essential which provides a 15 minute response time 24x7 for most enterprise level customers, and Critical which includes a 6 hour repair commitment where available and outage management response for severity 1 incidents.
https://www.hpe.com/services/techcare

HPE Pointnext Complete Care

HPE Pointnext Complete Care is a modular, edge-to-cloud IT environment service that provides a holistic approach to optimizing your entire IT environment and achieving agreed upon IT outcomes and business goals through a personalized and customer-centric experience. All delivered by an assigned team of HPE Pointnext Services experts. HPE Pointnext Complete Care provides:

- A complete coverage approach -- edge to cloud
- An assigned HPE team
- Modular and fully personalized engagement
- Enhanced Incident Management experience with priority access
- Digitally enabled and AI driven customer experience

https://www.hpe.com/services/completecare

Service and Support

Included Service and Support

3-Year, Next Business Day Support is included with every HPE ProLiant DX170r System. This service connects you to HPE during business hours for assistance on resolving issues. It guarantees hardware next business day onsite response as well as iLO Advanced Software support with call back within two hours. Simplify your support experience and make HPE your first call to help resolve hardware or iLO Advanced software problems. Nutanix should be your first call for any issues related to the Nutanix software.

Service and Support Enhancement Options

The following enhanced support services are available to tailor your support experience with the needs of your business.

- HPE 3-Year Next Business Day with DMR Hardware Service
- HPE 3-Year 24x7 Hardware Service
- HPE 3-Year 24x7 with DMR Hardware Service
- HPE 5-Year Next Business Day Hardware Service
- HPE 5-Year Next Business Day with DMR Hardware Service
- HPE 5-Year 24x7 Hardware Service
- HPE 5-Year 24x7 with DMR Hardware Service

DMR stands for Defective Media Retention. The defective media retention service allows you to retain defective hard disk or eligible SSD/Flash drive components that you do not want to relinquish due to sensitive data contained within the disk ("Disk or SSD/Flash Drive") covered under this service. All Disk or eligible SSD/Flash Drives on a covered system must participate in the defective media retention.

HPE Tech Care 24x7 gives you access to HPE 24 hours a day, seven days a week for assistance on resolving issues. This service includes need based Hardware onsite response within four hours.
https://www.hpe.com/h20195/V2/GetDocument.aspx?docname=4AA4-8876ENW&cc=us&lc=en

HPE Education Services

Keep your IT staff trained making sure they have the right skills to deliver on your business outcomes. Book a class today and learn how to get the most from your technology investment. **http://www.hpe.com/ww/learn**

HPE Support Center

The HPE Support Center is a personalized online support portal with access to information, tools and experts to support HPE business products. Submit support cases online, chat with Hewlett Packard Enterprise experts, access support resources or collaborate with peers. Learn more at **http://www.hpe.com/support/hpesc**

HPE's Support Center Mobile App* allows you to resolve issues yourself or quickly connect to an agent for live support. Now, you can get access to personalize IT support anywhere, anytime. HPE Insight Remote Support and HPE Support Center are available at no additional cost with a HPE warranty, HPE Support Service or HPE contractual support agreement.
Notes:*HPE Support Center Mobile App is subject to local availability
For more information visit **http://www.hpe.com/services**

Service and Support

Parts and Materials

Hewlett Packard Enterprise will provide HPE-supported replacement parts and materials necessary to maintain the covered hardware product in operating condition, including parts and materials for available and recommended engineering improvements.

Parts and components that have reached their maximum supported lifetime and/or the maximum usage limitations as set forth in the manufacturer's operating manual, product QuickSpecs, or the technical product data sheet will not be provided, repaired, or replaced as part of these services.

The defective media retention service feature option applies only to Disk or eligible SSD/Flash Drives replaced by Hewlett Packard Enterprise due to malfunction.

Configuration Information

This section lists some of the steps required to configure a Factory Integrated Model. To ensure only valid configurations are ordered, Hewlett Packard Enterprise recommends the use of a Hewlett Packard Enterprise approved configurator. Contact your local sales representative for information on configurable product offerings and requirements.

Notes:

- FIO indicates that this option is only available as a factory installable option.
- The HPE ProLiant DX2000 Chassis is required to support the server. Refer to HPE ProLiant DX2000 Chassis QuickSpecs for additional information.

Step 1: Base Configuration

HPE CTO Model

HPE ProLiant DX170r Gen10 1U Node Configure-to-order Server P17977-B21

Options included in this model

- HPE XL1x0r Gen10 M2 NGFF Riser
- HPE 240GB SATA MU M.2 2280 DS SSD
- HPE XL1x0r Gen10 Left Low Profile Riser Kit
- HPE XL170r Gen10 FLOM Riser Kit
- HPE XL170r Left E208ip/P408ip Cable Kit
- iLO Advance license with 3 years support
- HPE Smart Array E208i-p SR Gen10 Controller
- Tech Care Next Business Day 3 year support service

Step 2a: Choose Processor Options

Please select one –L21 processor required below.
For second processor, please select the same processor model with –B21 from Core Options – HPE Processors section
For example: first processor, select P18018-L21 then for second processor, select P180018-B21.

Notes:

- 2 processors are required.
- Mixing of 2 different processor models is not supported.
- When 2nd Generation Intel Xeon Scalable Processor is selected, then only DDR4-2933 Memory Kit can be selected
- All HPE DX170r processors come with the High Performance Heatsink included.

HPE Processors	SKU
2nd Generation Intel® Xeon	
Intel Xeon-Platinum 8253 (2.2GHz/16-core/125W) FIO Processor Kit for HPE ProLiant DX1x0r Gen10	P18018-L21
Intel Xeon-Gold 6252 (2.1GHz/24-core/150W) FIO Processor Kit for HPE ProLiant DX1x0r Gen10	P18017-L21
Intel Xeon-Gold 6248 (2.5GHz/20-core/150W) FIO Processor Kit for HPE ProLiant DX1x0r Gen10	P18016-L21
Intel Xeon-Gold 6244 (3.6GHz/8-core/150W) FIO Processor Kit for HPE ProLiant DX1x0r Gen10.	P18015-L21
Intel Xeon-Gold 6242 (2.8GHz/16-core/150W) FIO Processor Kit for HPE ProLiant DX1x0r Gen10.	P18014-L21
Intel Xeon-Gold 6240 (2.6GHz/18-core/150W) FIO Processor Kit for HPE ProLiant DX1x0r Gen10	P18013-L21
Intel Xeon-Gold 6238 (2.1GHz/22-core/140W) FIO Processor Kit for HPE ProLiant DX1x0r Gen10.	P18012-L21
Intel Xeon-Gold 6234 (3.3GHz/8-core/130W) FIO Processor Kit for HPE ProLiant DX1x0r Gen10	P18011-L21
Intel Xeon-Gold 6230 (2.1GHz/20-core/125W) FIO Processor Kit for HPE ProLiant DX1x0r Gen10	P18010-L21
Intel Xeon-Gold 6226R (2.9GHz/16-core/150W) FIO Processor Kit for HPE ProLiant DX1x0r Gen10	P23443-L21
Intel Xeon-Gold 6226 (2.7GHz/12-core/125W) FIO Processor Kit for HPE ProLiant DX1x0r Gen10	P18009-L21
Intel Xeon-Gold 5220R (2.2GHz/24-core/150W) FIO Processor Kit for HPE ProLiant DX1x0r Gen10	P23444-L21
Intel Xeon-Gold 5220 (2.2GHz/18-core/125W) FIO Processor Kit for HPE ProLiant DX1x0r Gen10	P18008-L21
Intel Xeon-Gold 5218R (2.1GHz/20-core/125W) FIO Processor Kit for HPE ProLiant DX1x0r Gen10	P23439-L21
Intel Xeon-Gold 5218 (2.3GHz/16-core/125W) FIO Processor Kit for HPE ProLiant DX1x0r Gen10	P18007-L21

Configuration Information

Intel Xeon-Gold 5217 (3.0GHz/8-core/115W) FIO Processor Kit for HPE ProLiant DX1x0r Gen10	P18006-L21
Intel Xeon-Gold 5215 (2.5GHz/10-core/85W) FIO Processor Kit for HPE ProLiant DX1x0r Gen10	P18005-L21
2nd Generation Intel® Xeon	
Intel Xeon-Silver 4216 (2.1GHz/16-core/100W) FIO Processor Kit for HPE ProLiant DX1x0r Gen10	P18004-L21
Intel Xeon-Silver 4215 (2.5GHz/8-core/85W) FIO Processor Kit for HPE ProLiant DX1x0r Gen10	P18003-L21
Intel Xeon-Silver 4214R (2.4GHz/12-core/100W) FIO Processor Kit for HPE ProLiant DX1x0r Gen10	P23441-L21
Intel Xeon-Silver 4214 (2.2GHz/12-core/85W) FIO Processor Kit for HPE ProLiant DX1x0r Gen10.	P18002-L21
Intel Xeon-Silver 4210R (2.4GHz/10-core/100W) FIO Processor Kit for HPE ProLiant DX1x0r Gen10	P23440-L21
Intel Xeon-Silver 4210 (2.2GHz/10-core/85W) FIO Processor Kit for HPE ProLiant DX1x0r Gen10	P18001-L21
Intel Xeon-Silver 4208 (2.1GHz/8-core/85W) FIO Processor Kit for HPE ProLiant DX1x0r Gen10	P18000-L21

Step 2b: Choose Memory Options

Notes: Minimum 2 DIMMs are required per server; up to 8 DIMMs per processor.
Notes: DDR4 speed is the maximum memory speed of the processor. Actual memory speed may depend on the quantity and type of DIMMs installed. For the maximum supported memory speeds for each processor listed above, please reference the 'Memory Speed by Processor Model' table in the Memory section of the QuickSpecs.

Registered DIMMs (RDIMMs) for 2nd Generation Intel Xeon Scalable Series

HPE DX 16GB (1x16GB) Single Rank x4 DDR4-2933 CAS-21-21-21 Registered Smart FIO Memory Kit	P18448-B21
HPE DX 16GB (1x16GB) Dual Rank x8 DDR4-2933 CAS-21-21-21 Registered Smart FIO Memory Kit	P18449-B21
HPE DX 32GB (1x32GB) Dual Rank x4 DDR4-2933 CAS-21-21-21 Registered Smart FIO Memory Kit	P18450-B21
HPE DX 64GB (1x64GB) Dual Rank x4 DDR4-2933 CAS-21-21-21 Registered Smart FIO Memory Kit	P18453-B21

Load Reduced DIMMs (LRDIMMs) for 2nd Generation Intel Xeon Scalable Series

HPE DX 64GB (1x64GB) Quad Rank x4 DDR4-2933 CAS-21-21-21 Load Reduced Smart FIO Memory Kit	P18451-B21

Notes:

- Minimum 2 DIMMs are required per server; up to 8 DIMMs per processor.
- A maximum of 16 DIMMs are supported per DX170r server tray (or 8 DIMMs max per processor).
- LRDIMM and RDIMM are distinct memory technologies and cannot be mixed within a server.
- HPE memory from previous generation servers is not compatible with this server. HPE SmartMemory is required to realize the memory performance improvements and enhanced functionality listed in this document for Gen10. For additional information, please see the HPE SmartMemory QuickSpecs at:
  https://www.hpe.com/h20195/v2/GetPDF.aspx/c04355083.pdf
- Depending on the memory configuration and processor model, the memory speed may run at 2666MHz, 2400MHz, and 2133MHz. Please see Memory Population Table or the Online Memory Configuration Tool at:
- **http://h22195.www2.hpe.com/MemoryTool/Home/Legal**

Step 3: Choose Additional Options for Factory Integration from Core Options section below

Core Options

HPE Processors

Notes: 2 processors are required. Select processor matching the first processor selection.

2nd Generation Intel® Xeon

Intel Xeon-Platinum 8253 (2.2GHz/16-core/125W) FIO2 Processor Kit for HPE ProLiant DX1x0r Gen10.	P18018-B21
Intel Xeon-Gold 6252 (2.1GHz/24-core/150W) FIO2 Processor Kit for HPE ProLiant DX1x0r Gen10.	P18017-B21
Intel Xeon-Gold 6248 (2.5GHz/20-core/150W) FIO2 Processor Kit for HPE ProLiant DX1x0r Gen10	P18016-B21
Intel Xeon-Gold 6244 (3.6GHz/8-core/150W) FIO2 Processor Kit for HPE ProLiant DX1x0r Gen10.	P18015-B21
Intel Xeon-Gold 6242 (2.8GHz/16-core/150W) FIO2 Processor Kit for HPE ProLiant DX1x0r Gen10.	P18014-B21
Intel Xeon-Gold 6240 (2.6GHz/18-core/150W) FIO2 Processor Kit for HPE ProLiant DX1x0r Gen10	P18013-B21
Intel Xeon-Gold 6238 (2.1GHz/22-core/140W) FIO2 Processor Kit for HPE ProLiant DX1x0r Gen10.	P18012-B21
Intel Xeon-Gold 6234 (3.3GHz/8-core/130W) FIO2 Processor Kit for HPE ProLiant DX1x0r Gen10	P18011-B21
Intel Xeon-Gold 6230 (2.1GHz/20-core/125W) FIO2 Processor Kit for HPE ProLiant DX1x0r Gen10	P18010-B21
Intel Xeon-Gold 6226R (2.9GHz/16-core/150W) FIO2 Processor Kit for HPE ProLiant DX1x0r Gen10	P23443-B21
Intel Xeon-Gold 6226 (2.7GHz/12-core/125W) FIO2 Processor Kit for HPE ProLiant DX1x0r Gen10	P18009-B21
Intel Xeon-Gold 5220R (2.2GHz/24-core/150W) FIO2 Processor Kit for HPE ProLiant DX1x0r Gen10	P23444-B21
Intel Xeon-Gold 5220 (2.2GHz/18-core/125W) FIO2 Processor Kit for HPE ProLiant DX1x0r Gen10	P18008-B21
Intel Xeon-Gold 5218R (2.1GHz/20-core/125W) FIO2 Processor Kit for HPE ProLiant DX1x0r Gen10	P23439-B21
Intel Xeon-Gold 5218 (2.3GHz/16-core/125W) FIO2 Processor Kit for HPE ProLiant DX1x0r Gen10	P18007-B21
Intel Xeon-Gold 5217 (3.0GHz/8-core/115W) FIO2 Processor Kit for HPE ProLiant DX1x0r Gen10	P18006-B21
Intel Xeon-Gold 5215 (2.5GHz/10-core/85W) FIO2 Processor Kit for HPE ProLiant DX1x0r Gen10	P18005-B21
Intel Xeon-Silver 4216 (2.1GHz/16-core/100W) FIO2 Processor Kit for HPE ProLiant DX1x0r Gen10	P18004-B21
Intel Xeon-Silver 4215 (2.5GHz/8-core/85W) FIO2 Processor Kit for HPE ProLiant DX1x0r Gen10	P18003-B21
Intel Xeon-Silver 4214R (2.4GHz/12-core/100W) FIO2 Processor Kit for HPE ProLiant DX1x0r Gen10	P23441-B21
Intel Xeon-Silver 4214 (2.2GHz/12-core/85W) FIO2 Processor Kit for HPE ProLiant DX1x0r Gen10.	P18002-B21
Intel Xeon-Silver 4210R (2.4GHz/10-core/100W) FIO2 Processor Kit for HPE ProLiant DX1x0r Gen10	P23440-B21
Intel Xeon-Silver 4210 (2.2GHz/10-core/85W) FIO2 Processor Kit for HPE ProLiant DX1x0r Gen10	P18001-B21
Intel Xeon-Silver 4208 (2.1GHz/8-core/85W) FIO Processor Kit for HPE ProLiant DX1x0r Gen10	P18000-L21

HPE Memory

Registered DIMMs (RDIMMs) for 2nd Generation Intel Xeon Scalable Series

HPE DX 16GB (1x16GB) Single Rank x4 DDR4-2933 CAS-21-21-21 Registered Smart FIO Memory Kit P18448-B21

- Standalone: P00920-B21

HPE DX 16GB (1x16GB) Dual Rank x8 DDR4-2933 CAS-21-21-21 Registered Smart FIO Memory Kit P18449-B21

- Standalone: P00922-B21

HPE DX 32GB (1x32GB) Dual Rank x4 DDR4-2933 CAS-21-21-21 Registered Smart FIO Memory Kit P18450-B21

- Standalone: P00924-B21

HPE DX 64GB (1x64GB) Dual Rank x4 DDR4-2933 CAS-21-21-21 Registered Smart FIO Memory Kit P18453-B21

- Standalone: P00930-B21

Load Reduced DIMMs (LRDIMMs) for 2nd Generation Intel Xeon Scalable Series

HPE DX 64GB (1x64GB) Quad Rank x4 DDR4-2933 CAS-21-21-21 Load Reduced Smart FIO Memory Kit P18451-B21

- Standalone: P00926-B21

Core Options

Notes:

- Minimum 1 DIMMs are required per processor; up to 8 DIMMs per processor.
- HPE memory from previous generation servers (DDR3) is not compatible with this server. HPE DDR4 SmartMemory is required to realize the memory performance improvements and enhanced functionality listed in this document for Gen10. For additional information, please see the HPE DDR4 SmartMemory QuickSpecs at:
- **http://www8.hpe.com/h20195/v2/GetHTML.aspx?docname=c04380279**
- LRDIMM and RDIMM are distinct memory technologies and cannot be mixed within a server.
- Depending on the memory configuration and processor model, the memory speed may run at 2666MHz. 2400MHz, 2133MHz. Please see Memory Population Table or the Online Memory Configuration Tool at:
- **http://h22195.www2.hpe.com/MemoryTool/Home/Legal**

FlexibleLOM Adapters

HPE DX Ethernet 10Gb 2-port 562FLR-T FIO Adapter P18458-B21

- Stand alone: 817745-B21

HPE DX Ethernet 1Gb 4-port 366FLR FIO Adapter P18459-B21

- Stand alone: 665240-B21

HPE DX Ethernet 10/25Gb 2-port 640FLR-SFP28 FIO Adapter P18461-B21

- Stand alone: 817749-B21

Media Module Adapters

HPE DX Ethernet 10Gb 2-port 568FLR-SFP+ Media Module FIO Adapter P19147-B21

- Stand alone: 866467-B21

HPE DX Ethernet 10Gb 2-port 568FLR-MMT FIO Adapter P19149-B21

- Standalone: 868227-B21

HPE Drives

Midline - 12G SAS - SFF Drives

HPE DX 2TB SAS 12G Midline 7.2K SFF (2.5in) SC 1yr Wty 512e FIO HDD P17956-B21

- Standalone: 765466-B21

Midline - 12G SAS - LFF Drives

HPE DX 2TB SAS 12G Midline 7.2K LFF (3.5in) LP 1yr Wty Digitally Signed Firmware FIO HDD P17962-B21

- Standalone: 833926-B21

HPE DX 4TB SAS 12G Midline 7.2K LFF (3.5in) LP 1yr Wty Digitally Signed Firmware FIO HDD P17963-B21

- Standalone: 833928-B21

HPE DX 6TB SAS 12G Midline 7.2K LFF (3.5in) LP 1yr Wty 512e FIO HDD P17964-B21

- Standalone: 861746-B21

HPE DX 8TB SAS 12G Midline 7.2K LFF (3.5in) LP 1yr Wty 512e Digitally Signed Firmware FIO HDD P17965-B21

Standalone: 834031-B21

HPE DX 12TB SAS 12G Midline 7.2K LFF (3.5in) LP 1yr Wty Helium 512e Digitally Signed Firmware FIO HD P17966-B21

- Standalone: 881781-B21

Core Options

SSD Selection

Read Intensive - SATA - LFF - Solid State Drives

HPE DX 1.92TB SATA 6G Read Intensive LFF (3.5in) LPC 3yr Wty Digitally Signed Firmware FIO SSD	P19093-B21
HPE DX 3.84TB SATA 6G Read Intensive LFF (3.5in) LPC 3yr Wty Digitally Signed Firmware FIO SSD	P19097-B21
HPE DX 3.84TB SATA 6G Read Intensive LFF (3.5in) LPC 3yr Wty Digitally Signed Firmware FIO SSD	P19134-B21

Read Intensive – SATA – SFF - Solid State Drives

HPE DX 1.92TB SATA 6G Read Intensive SFF (2.5in) SC 3yr Wty Digitally Signed Firmware FIO SSD	P17970-B21
HPE DX 3.84TB SATA 6G Read Intensive SFF (2.5in) SC 3yr Wty Digitally Signed Firmware FIO SSD	P18736-B21
HPE DX 3.84TB SATA 6G Read Intensive SFF (2.5in) SC 3yr Wty Digitally Signed Firmware FIO SSD	P19133-B21

Standalone: P05946-B21

Mixed Use - SATA - LFF Solid State Drives

HPE DX 960GB SATA 6G Mixed Use LFF (3.5in) LPC 3yr Wty Digitally Signed Firmware FIO SSD	P19090-B21
HPE DX 1.92TB SATA 6G Mixed Use LFF (3.5in) LPC 3yr Wty Digitally Signed Firmware FIO SSD	P18137-B21
HPE DX 960GB SATA 6G Mixed Use LFF (3.5in) LPC 3yr Wty Digitally Signed Firmware FIO SSD	P19099-B21
HPE DX 1.92TB SATA 6G Mixed Use LFF (3.5in) LPC 3yr Wty Digitally Signed Firmware FIO SSD	P19132-B21

Mixed Use - SATA - SFF - Solid State Drives

HPE DX 960GB SATA 6G Mixed Use SFF (2.5in) SC 3yr Wty Digitally Signed Firmware FIO SSD	P17968-B21
HPE DX 1.92TB SATA 6G Mixed Use SFF (2.5in) SC 3yr Wty Digitally Signed Firmware FIO SSD	P17969-B21
HPE DX 960GB SATA 6G Mixed Use SFF (2.5in) SC 3yr Wty Digitally Signed Firmware FIO SSD	P17973-B21
HPE DX 1.92TB SATA 6G Mixed Use SFF (2.5in) SC 3yr Wty Digitally Signed Firmware FIO SSD	P18054-B21

HPE Rack Options

Rail Kits

HPE 2U Shelf-Mount Adjustable Rail Kit	822731-B21

HPE Support Services

HPE 3 Year Next Business Day with Defective Media Retention DX2xx Gen10 Hardware Service	HG7A5E
HPE 3 Year 24x7 DX2xx Gen10 Hardware Service	HG7A6E
HPE 3 Year 24x7 with Defective Media Retention DX2xx Gen10 Hardware Service	HG7A7E
HPE 5 Year Next Business Day DX2xx Gen10 Hardware Service	HG7A8E
HPE 5 Year Next Business Day with Defective Media Retention DX2xx Gen10 Hardware Service	HG7A9E
HPE 5 Year 24x7 DX2xx Gen10 Hardware Service	HG7B0E
HPE 5 Year 24x7 with Defective Media Retention DX2xx Gen10 Hardware Service	HN4W7E

Technical Specifications

System Unit Specifications		
Server Dimensions (L x W x D)	1.63 x 7.27 x 25.91 in (4.13 x 18.45 x 65.80 cm)	
Weight (approximate)	Maximum	15.23lb (6.91 kg)
System Inlet Temperature Standard Operating Support	10° to 35°C (50° to 95°F)	At sea level with an altitude derating of 1.0°C per every 305 m (1.8°F per every 1000 ft) above sea level to a maximum of 3050 m (10,000 ft), no direct sustained sunlight. Maximum rate of change is 20°C/hr (36°F/hr). The upper limit and rate of change may be limited by the type and number of options installed.
Extended Ambient Operating Support	10° to 5°C (50° to 41°F) and 35° to 40°C (95° to 104°F)	System performance during standard operating support may be reduced if operating with a fan fault or above 30°C (86°F). For approved hardware configurations, the supported system inlet range is extended to be: 5° to 10°C (41° to 50°F) and 35° to 40°C (95° to 104°F) at sea level with an altitude derating of 1.0°C per every 175 m (1.8°F per every 574 ft) above 900 m (2953 ft) to a maximum of 3050 m (10,000 ft). The approved hardware configurations for this system are listed at the URL: **http://www.hpe.com/servers/ashrae** For approved hardware configurations, the supported system inlet range is extended to be: 40° to 45°C (104° to 113°F) at sea level with an altitude derating of 1.0°C per every 125 m (1.8°F per every 410 ft) above 900 m (2953 ft) to a maximum of 3050 m (10,000 ft). The approved hardware configurations for this system are listed at the URL: **http://www.hpe.com/servers/ashrae** System performance may be reduced if operating in the extended ambient operating range or with a fan fault.
	-30° o 60°C (-22° to 140°F).	Maximum rate of change is 20°C/hr (36°F/hr).
Relative Humidity (non-condensing) Operating	8% to 90%	Relative humidity (Rh), 28°C maximum wet bulb temperature, non-condensing.
Non-operating	5 to 95%	Relative humidity (Rh), 38.7°C (101.7°F) maximum wet bulb temperature, non-condensing.
Altitude Operating	3050 m (10,000 ft).	This value may be limited by the type and number of options installed. Maximum allowable altitude change rate is 457 m/min (1500 ft/min).
Non-operating	9144 m (30,000 ft).	Maximum allowable altitude change rate is 457 m/min (1500 ft/min).

Acoustic Noise

Listed are the declared A-Weighted sound power levels (LWAd) and declared average bystander position A-Weighted sound pressure levels (LpAm) when the product is operating in a 23°C ambient environment. Noise emissions were measured in accordance with ISO 7779 (ECMA 74) and declared in accordance with ISO 9296 (ECMA 109). The listed sound levels apply to standard shipping configurations. Additional options may result in increased sound levels.

Notes: Please have your HPE representative provide information from the HPE EMESC website for further technical details regarding the configurations listed below.r2200 Chassis.

Technical Specifications

DX2200 Chassis			
Configuration SKU	**Entry**	**Base**	**Performance**
Idle			
LWAd	6.7 B	7.8 B	8.4 B
LpAm	52 dBA	62 dBA	70 dBA
Operating			
LWAd	6.9 B	8.2 B	8.9 B
LpAm	53 dBA	66 dBA	74 dBA

DX2600 Chassis			
Configuration SKU	**Entry**	**Base**	**Performance**
Idle			
LWAd	6.7 B	7.7 B	7.9 B
LpAm	52 dBA	64 dBA	68 dBA
Operating			
LWAd	6.9 B	8.0 B	8.7 B
LpAm	54 dBA	66 dBA	70 dBA

Notes: Acoustics levels presented here are generated by the test configuration only. Acoustics levels will vary depending on system configuration. Values are subject to change without notification and are for reference only.

Thermal limitations

For a full list of thermal limitations please see the HPE ProLiant DX170r Gen 10 Server User Guide.
https://support.hpe.com/hpsc/doc/public/display?docId=emr_na-a00027945en_us&docLocale=en_US

Environment-friendly Products and Approach - End-of-life Management and Recycling

Hewlett Packard Enterprise offers end-of-life **product return, trade-in, and recycling programs**, in many geographic areas, for our products. Products returned to Hewlett Packard Enterprise will be recycled, recovered or disposed of in a responsible manner.

The EU WEEE Directive (2012/19/EU) requires manufacturers to provide treatment information for each product type for use by treatment facilities. This information (product disassembly instructions) is posted on the **Hewlett Packard Enterprise web site**. These instructions may be used by recyclers and other WEEE treatment facilities as well as Hewlett Packard Enterprise OEM customers who integrate and re-sell Hewlett Packard Enterprise equipment.

Summary of Changes

Date	Version History	Action	Description of Change
06-Dec-2021	Version 6	Changed	Removed Memory SKU Configuration Information section was updated.
15-Nov-2021	Version 5	Changed	Core Options section was updated. Obsolete SKUs were removed Service and Support section was updated
06-Apr-2020	Version 4	Changed	Standard Features section was updated
24-Feb-2020	Version 3	Changed	Configuration Information and Core Options sections were updated
06-Jan-2020	Version 2	Changed	Core Options section was updated.
30-Jul-2019	Version 1	New	New QuickSpecs

Copyright

Make the right purchase decision.
Contact our presales specialists.


Chat


Email


Call


Get updates

© Copyright 2021 Hewlett Packard Enterprise Development LP. The information contained herein is subject to change without notice. The only warranties for Hewlett Packard Enterprise products and services are set forth in the express warranty statements accompanying such products and services. Nothing herein should be construed as constituting an additional warranty. Hewlett Packard Enterprise shall not be liable for technical or editorial errors or omissions contained herein.

Intel, the Intel logo, Xeon and Xeon Inside are trademarks of Intel Corporation in the U.S. and other countries. VMware is a registered trademark of VMware, Inc. in the United States and/or other jurisdictions.

For hard drives, 1GB = 1 billion bytes. Actual formatted capacity is less.


Hewlett Packard
Enterprise

a00073561enw - 16520 - Worldwide - V6 - 06-December-2021