HPE ProLiant RL300 Gen11 Server User Guide

Part Number: 30-5DF75FC8-002
Published: April 2023
Edition: 2

HPE ProLiant RL300 Gen11 Server User Guide

Abstract

This document is for the person who installs, administers, and troubleshoots servers and storage systems. Hewlett Packard Enterprise assumes you are qualified in the servicing of computer equipment and trained in recognizing hazards in products with hazardous energy levels, and are familiar with the weight and stability precautions for rack installations.

Part Number: 30-5DF75FC8-002
Published: April 2023
Edition: 2

© Copyright Hewlett Packard Enterprise Development LP

Notices

The information contained herein is subject to change without notice. The only warranties for Hewlett Packard Enterprise products and services are set forth in the express warranty statements accompanying such products and services. Nothing herein should be construed as constituting an additional warranty. Hewlett Packard Enterprise shall not be liable for technical or editorial errors or omissions contained herein.

Confidential computer software. Valid license from Hewlett Packard Enterprise required for possession, use, or copying. Consistent with FAR 12.211 and 12.212, Commercial Computer Software, Computer Software Documentation, and Technical Data for Commercial Items are licensed to the U.S. Government under vendor's standard commercial license.

Links to third-party websites take you outside the Hewlett Packard Enterprise website. Hewlett Packard Enterprise has no control over and is not responsible for information outside the Hewlett Packard Enterprise website.

Acknowledgments

Ampere® and Altra® are registered trademarks of Ampere Computing.

Arm® is a registered trademark of Arm Limited (or its subsidiaries) in the US and/or elsewhere.

Linux® is the registered trademark of Linus Torvalds in the U.S. and other countries.

All third-party marks are property of their respective owners.

Revision history

Part number	Publication date	Edition	Summary of changes
30-5DF75FC8-001	December 2022	1	Initial release
30-5DF75FC8-002	April 2023	2	Fixed callouts on the system board

Table of contents

Component identification 7
- Front panel components 7
  - iLO Service Port 8
- Front panel LEDs and buttons 8
  - Server UID LED 10
  - Using the UID button to view the Server Health Summary 10
  - Front panel LED power fault codes 11
- Rear panel components 11
- Rear panel LEDs 12
- System board components 13
  - System maintenance switch descriptions 16
  - DIMM slot locations 16
  - DIMM label identification 17
- Drive boxes and bay numbering 19
- HPE Basic Drive LED definitions 19
- PCIe4 slot description 20
- M.2 pass-through module components 22

Setup 22
- Optional services 23
- Setting up the server 23
  - Rack warnings and cautions 25
  - Server warnings and cautions 27
  - Electrostatic discharge 28
- Operational requirements 28
  - Space and airflow requirements 29
  - Temperature requirements 30
  - Power requirements 30
  - Electrical grounding requirements 31

Operations 31
- Power up the server 32
- Power down the server 32
- Extend the server from the rack 33
- Remove the server from the rack 33
- Remove the access panel 35

Install the access panel....35
Release the cable management arm....36
Removing the air baffle....36
Removing a riser cage....38
Hardware options installation....40
Hewlett Packard Enterprise product QuickSpecs....41
Introduction....41
Rack mounting options....41
Rack mounting interfaces....42
Rack rail options....42
Rail identification markers....42
Installing the rack rails....43
Installing the server into the rack....48
Installing the rack rail hook-and-loop strap....50
Installing the cable management arm....51
Power supply options....55
Installing a redundant hot-plug power supply....55
Fan options....58
Fan mode behavior....59
Installing a hot-plug fan....59
Memory options....60
DIMM population information....60
DIMM-processor compatibility....61
Installing a DIMM....61
Drive options....62
Installing a hot-plug NVMe drive....63
Riser options....64
Installing an expansion card....65
Installing a riser cage....67
Installing the M.2 pass-through module....69
Installing an OCP 3.0 adapter card....74
Installing the chassis intrusion detection switch....77
Installing the serial port....78
HPE Trusted Platform Module 2.0....80
HPE Trusted Platform Module 2.0 guidelines....80
Cabling....81
Cabling guidelines....81
Cabling diagrams....83

Cable routing: 8 SFF backplane to system board....84
Cable routing: 2 SFF backplane to system board....85
Cable routing: 8 SFF + 2 SFF backplane power....86
Cable routing: M.2 module....87
Cable routing: intrusion detection switch....89
Cable routing: front I/O....90
Cable routing: OCP x16 bandwidth upgrade....91
Cable routing: serial port....91
Configuration resources....92
Updating firmware or system ROM....93
Configuring the server....93
Deploying an OS....94
Configuring security....94
Optimizing the server....95
Server management....95
Troubleshooting resources....96
Safety, warranty, and regulatory information....96
Regulatory information....96
Notices for Eurasian Economic Union....97
Turkey RoHS material content declaration....98
Ukraine RoHS material content declaration....98
Warranty information....98
Specifications....99
Environmental specifications....99
Server specifications....100
Power supply specifications....100
HPE 800 W Flex Slot Titanium Hot-plug Low Halogen Power Supply....100
Websites....101
Support and other resources....101
Accessing Hewlett Packard Enterprise Support....102
Accessing updates....103
Customer self repair....103
Remote support....104
Documentation feedback....104

Component identification

Subtopics

Front panel components
Front panel LEDs and buttons
Rear panel components
Rear panel LEDs
System board components
Drive boxes and bay numbering
HPE Basic Drive LED definitions
PCIe4 slot description
M.2 pass-through module components

Front panel components

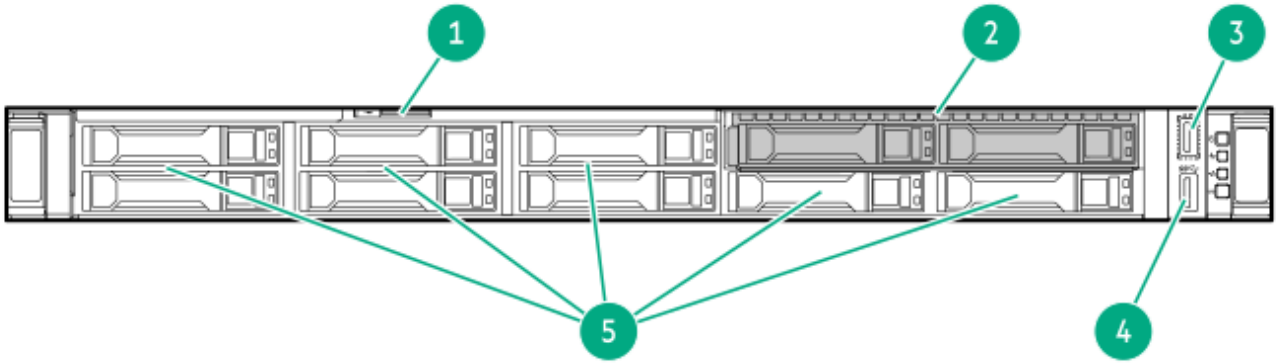

Item	Description
1	Serial number and iLO information pull tab
2	2SFF drive bays
3	iLO service port
4	USB 3.0 port
5	8SFF drive bays

Subtopics

iLO Service Port

When you have physical access to a server, you can use the Service Port to do the following:

- Download the Active Health System Log to a supported USB flash drive.

  When you use this feature, the connected USB flash drive is not accessible by the host operating system.
- Connect a client (such as a laptop) with a supported USB to Ethernet adapter to access the following:
  - iLO web interface
  - Remote console
  - iLO RESTful API
  - CLI

  Hewlett Packard Enterprise recommends the HPE USB to Ethernet Adapter (part number Q7Y55A).

When you use the iLO Service Port:

- Actions are logged in the iLO event log.
- The server UID flashes to indicate the Service Port status.

  You can also retrieve the Service Port status by using a REST client and the iLO RESTful API.
- You cannot use the Service Port to boot any device within the server, or the server itself.
- You cannot access the server by connecting to the Service Port.
- You cannot access the connected device from the server.

For more information about the iLO Service Port, see the iLO user guide at the following website: **https://www.hpe.com/support/ilo-docs**.

Front panel LEDs and buttons

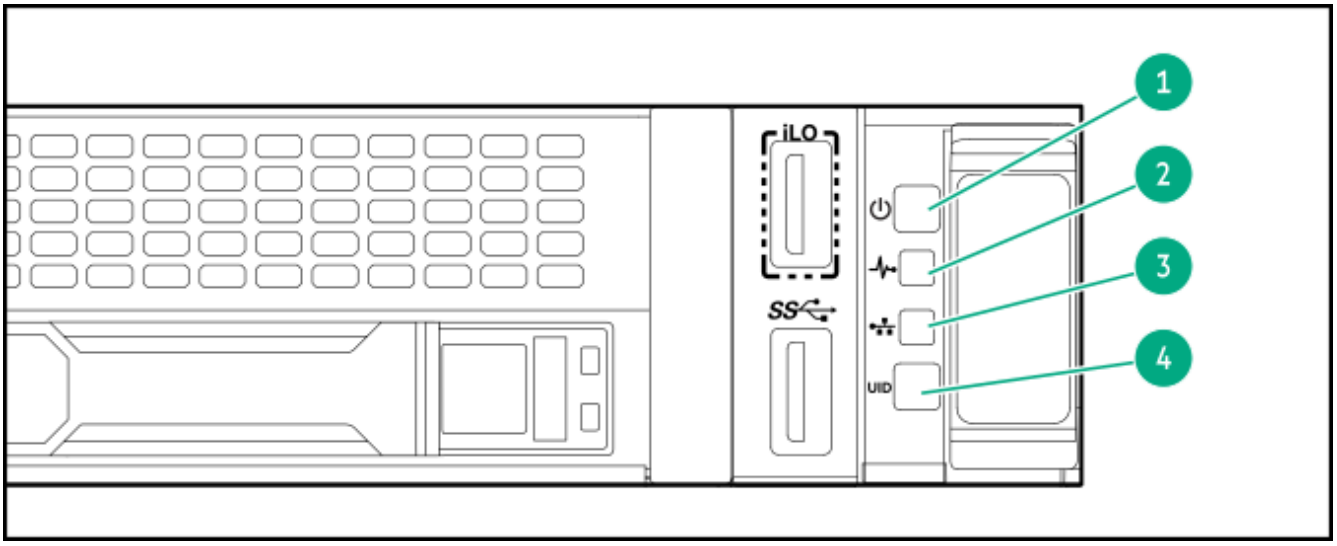

Item	Description	Status
1	Power On/Standby button and system power LED [1]	Solid green = System on Flashing green = Performing power on sequence Solid amber = System in standby Off = No power present [2]
2	Health LED [1]	Solid green = Normal Flashing green = iLO is rebooting. Flashing amber = System degraded Flashing red = System critical [3]
3	NIC status LED [1]	Solid green = Link to network Flashing green = Network active Off = No network activity
4	UID button/LED [1]	Solid blue = Activated Off = Deactivated Flashing blue: • 1 Hz = Remote management or firmware upgrade in progress • 4 Hz = iLO manual reboot sequence initiated • 8 Hz = iLO manual reboot sequence in progress

[1] When all four LEDs described in this table flash simultaneously, a power fault has occurred.

2 Facility power is not present, power cord is not attached, no power supplies are installed, power supply failure has occurred, or the power button cable is disconnected.
3 If the health LED indicates a degraded or critical state, review the system IML or use iLO to review the system health status.

Subtopics

Server UID LED
Using the UID button to view the Server Health Summary
Front panel LED power fault codes

Server UID LED

The UID LED is used to locate a particular server when it is deployed in a dense rack with other equipment. Activating the UID LED helps an on-site technician to quickly identify a server for maintenance tasks.

Using the UID button to view the Server Health Summary

Prerequisites

- An external monitor is connected.
- In the iLO web interface, the **Show Server Health on External Monitor** feature is enabled on the **Access Settings** page.

About this task

You can use the UID button to display the iLO **Server Health Summary** screen on an external monitor. This function works both when the server is powered on or off. Use this feature for troubleshooting if the server will not start up.



CAUTION: Press and release the UID button. Holding it down at any time for more than five seconds initiates a graceful iLO reboot or a hardware iLO reboot. Data loss or NVRAM corruption might occur during a hardware iLO reboot.

Procedure

1. Press and release the UID button.

   The **Server Health Summary** screen is displayed on the external monitor. For more information, see the iLO troubleshooting guide on the Hewlett Packard Enterprise website (**https://www.hpe.com/support/ilo-docs**).

2. Press the UID button again to close the **Server Health Summary** screen.

Front panel LED power fault codes

The following table provides a list of power fault codes, and the subsystems that are affected. Not all power faults are used by all servers.

Subsystem	LED behavior
System board	1 flash
Processor	2 flashes
Memory	3 flashes
Riser board PCIe slots	4 flashes
FlexibleLOM	5 flashes
Storage controller	6 flashes
System board PCIe slots	7 flashes
Power backplane	8 flashes
Storage backplane	9 flashes
Power supply	10 flashes
PCIe expansion cards installed in riser board	11 flashes
Chassis	12 flashes
GPU card	13 flashes

Rear panel components

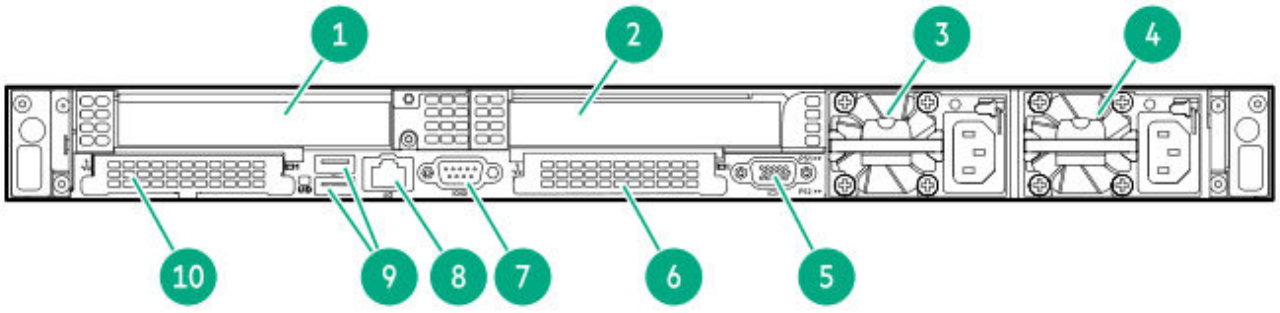

Item	Description
1	Primary PCIe4 x16 slot
2	Secondary PCIe4 x16 slot
3	Flexible slot power supply 2 (optional)
4	Flexible slot power supply 1
5	VGA port
6	OCP slot 2
7	Serial port (optional)
8	iLO management port
9	USB 3.2 Gen 1 ports
10	OCP slot 1

Rear panel LEDs

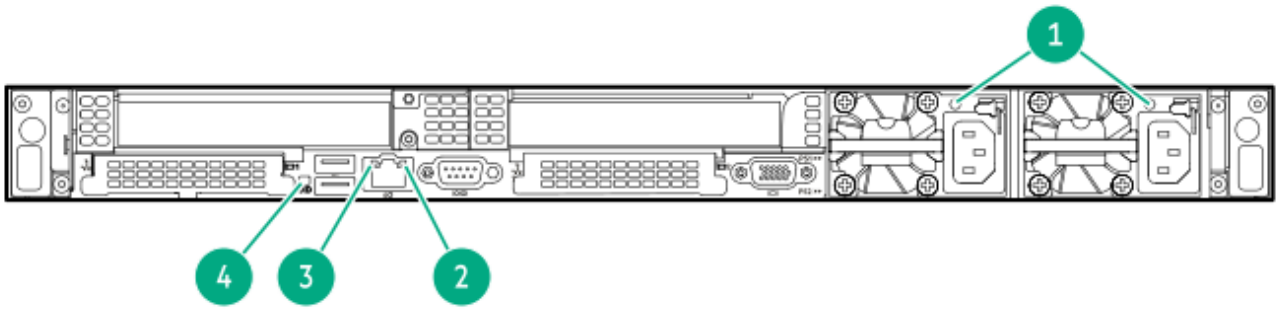

Item	LED	Status	Definition
1	Power supply	Solid green	The power supply is operating normally.
		Off	One or more of the following conditions exists: • Power is unavailable • Power supply failure • Power supply is in standby mode

Item	LED	Status	Definition
			• Power supply error
2	iLO status	Solid green	Linked to network
		Flashing green	Network active
		Off	No network activity
3	iLO link	Solid green	Network link
		Off	No network link
4	UID	Solid blue	Activated
		Off	Deactivated
		Flashing blue	• 1 flash per sec = Remote management or firmware upgrade in progress • 4 flashes per sec = iLO manual reboot sequence initiated • 8 flashes per sec = iLO manual reboot sequence in progress

System board components

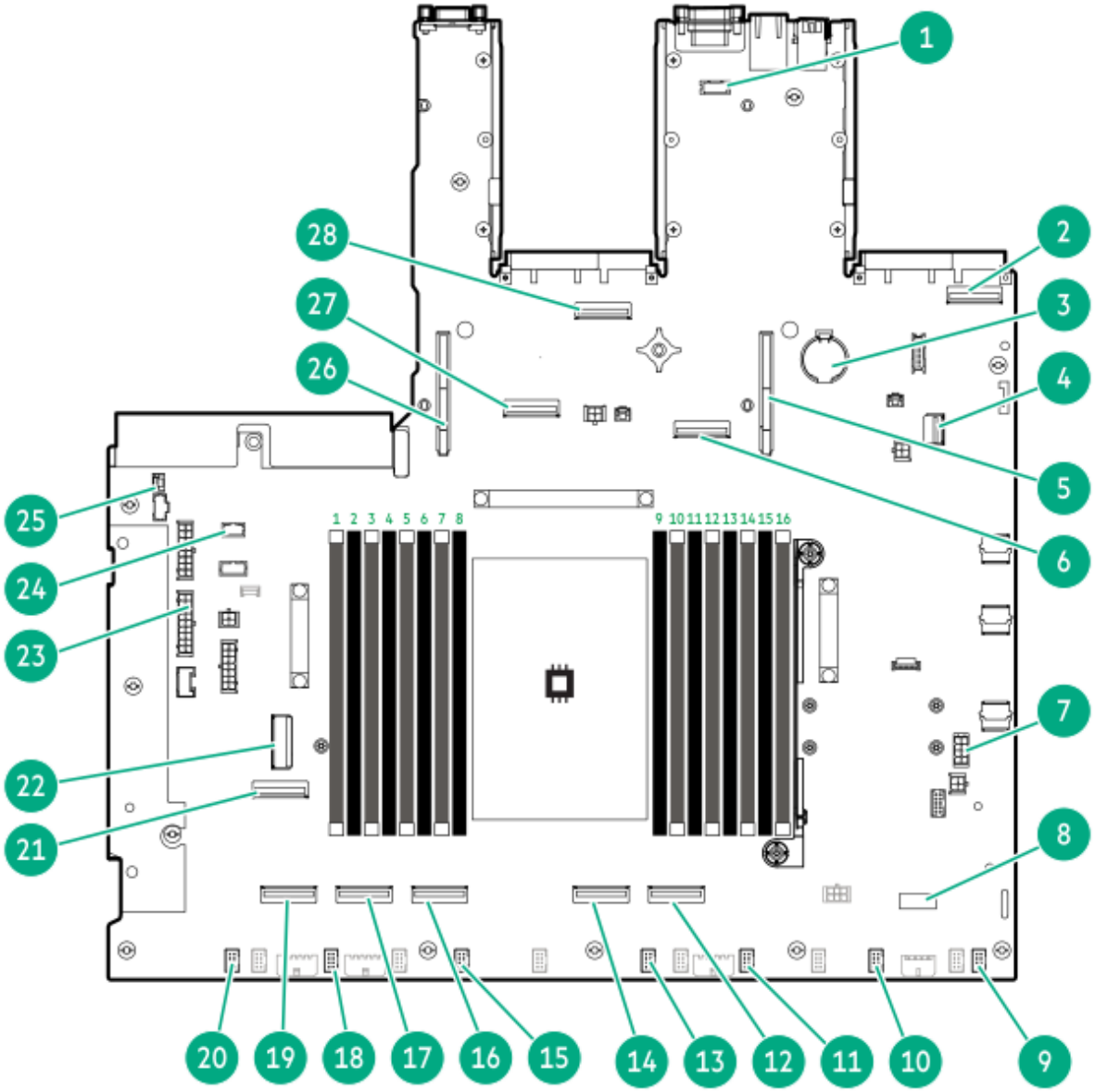

Item	Description
1	Serial port cable connector
2	OCP1 x16 upgrade port
3	System battery
4	Front I/O connector
5	Primary riser connector
6	NVMe port 8 or OCP1 x16 link port
7	Graphics card auxiliary power connector

Item	Description
8	System maintenance switch
9	Fan connector 7
10	Fan connector 6
11	Fan connector 5
12	NVMe port 1
13	Fan connector 4
14	NVMe port 2
15	Fan connector 3
16	NVMe port 3
17	NVMe port 4
18	Fan connector 2
19	NVMe port 5
20	Fan connector 1
21	NVMe port 6
22	M.2 module data connector
23	Drive backplane power connector
24	M.2 module power connector
25	Chassis intrusion detection switch connector
26	Secondary riser connector
27	OCP2 x16 link port
28	OCP2 x16 upgrade port

Subtopics

System maintenance switch descriptions
DIMM slot locations
DIMM label identification

System maintenance switch descriptions

Position	Default	Function
S1 [1]	Off	• Off—iLO security is enabled. • On—iLO security is disabled.
S2	Off	Reserved
S3	Off	Reserved
S4	Off	Reserved
S5 [1]	Off	• Off—Power-on password is enabled. • On—Power-on password is disabled.
S6 [1], [2] [3]	Off	• Off—No function • On—Restore default manufacturing settings
S7	Off	Reserved
S8	Off	Reserved
S9	Off	Reserved
S10	Off	Reserved
S11	Off	Reserved
S12	Off	Reserved

[1] To access the redundant ROM, set S1, S5, and S6 to On.
[2] When the system maintenance switch position 6 is set to the On position, the system is prepared to restore all configuration settings to their manufacturing defaults.
[3] When the system maintenance switch position 6 is set to the On position and Secure Boot is enabled, some configurations cannot be restored. For more information, see Configuring the Server.

DIMM slot locations

DIMM slots are numbered sequentially 1 through 16.

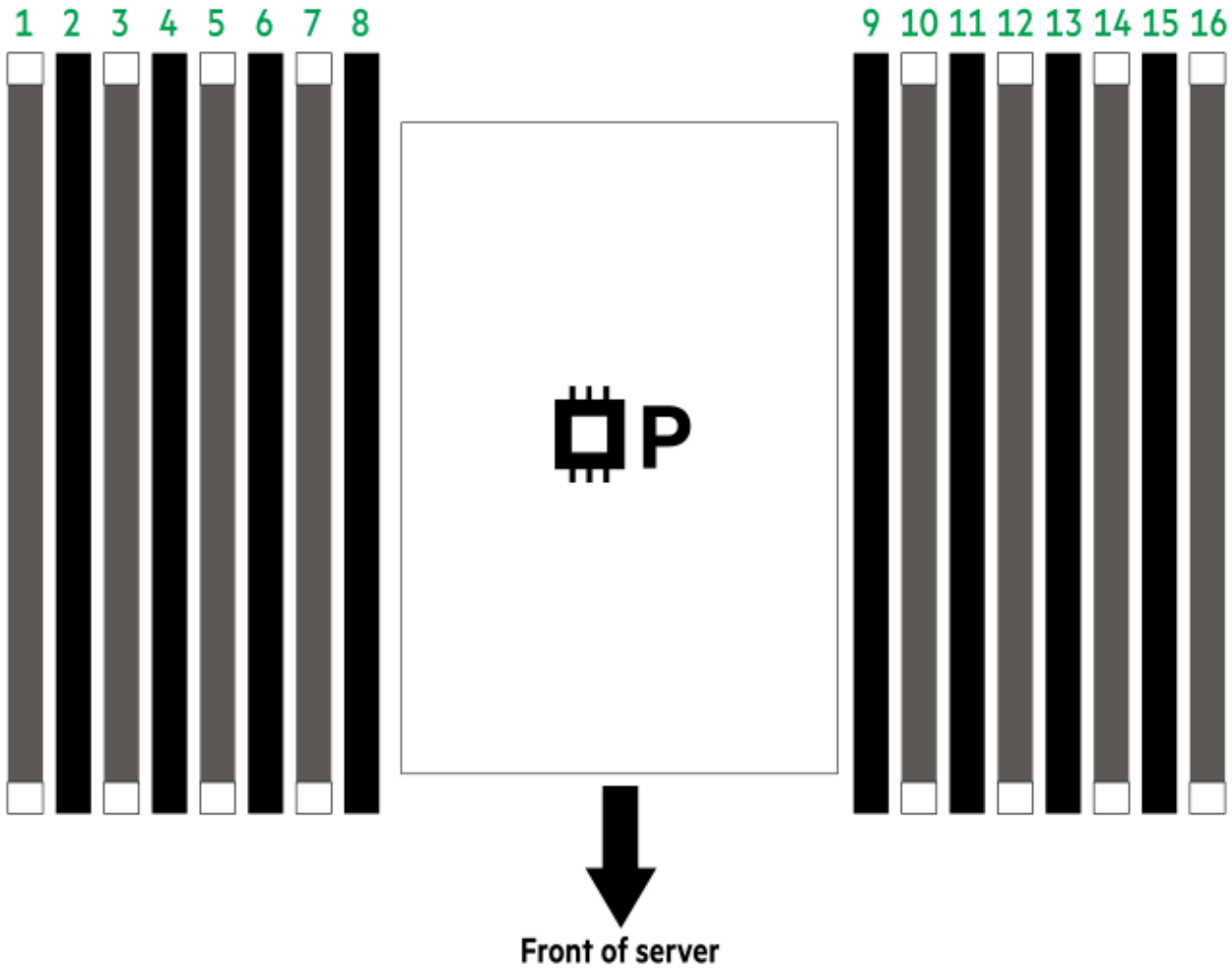

DIMM label identification

To determine DIMM characteristics, see the label attached to the DIMM. The information in this section helps you to use the label to locate specific information about the DIMM.

For more information about product features, specifications, options, configurations, and compatibility, see the HPE DDR4 SmartMemory QuickSpecs on the Hewlett Packard Enterprise website (**https://www.hpe.com/support/DDR4SmartMemoryQS**).

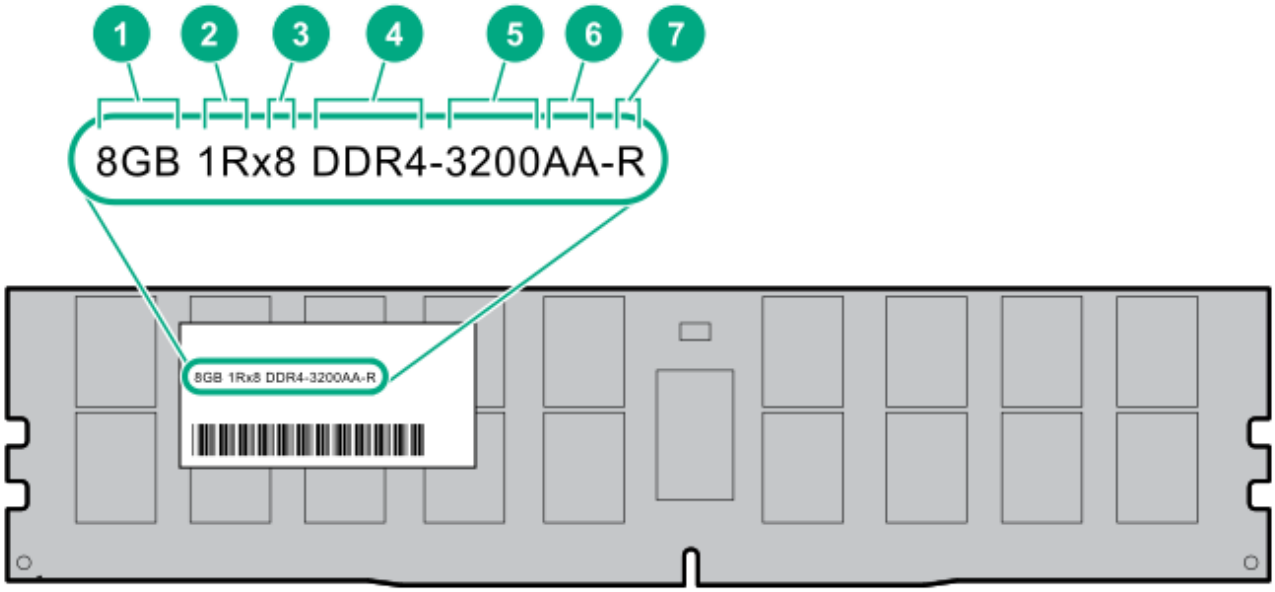

Item	Description	Example
1	Capacity	8 GB 16 GB 32 GB 64 GB 256 GB
2	Rank	1R = Single rank 2R = Dual rank 4R = Quad rank 8R = Octal rank
3	Data width on DRAM	x4 = 4-bit x8 = 8-bit
4	Memory generation	PC4 = DDR4
5	Maximum memory speed	3200 MT/s
6	CAS latency	AA = CAS 22-22-22 AA = CAS 26-22-22 (for 3DS LRDIMM)
7	DIMM type	R = RDIMM (registered) L = LRDIMM (load reduced)

Drive boxes and bay numbering

Drive boxes

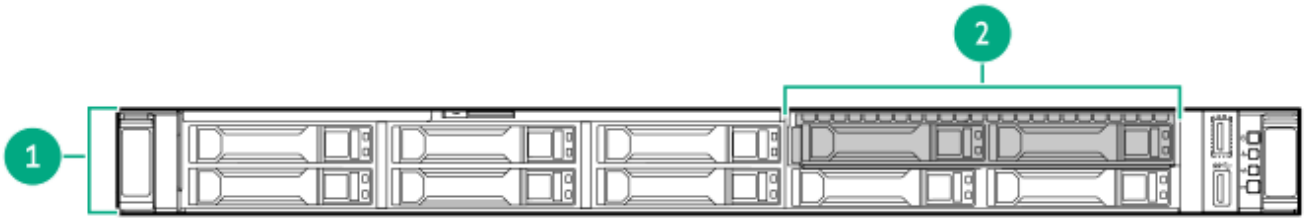

Drive bay numbering



HPE Basic Drive LED definitions

SFF basic drive carrier

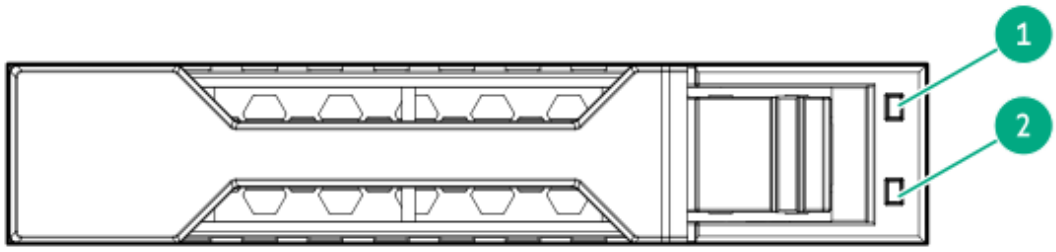

Item	LED	Status	Definition
1	Fault or Locate	Solid amber	This drive has failed, is unsupported, or is invalid.
		Solid blue	A management application has identified the drive a nd the drive is operating normally.
		Flashing amber or blue (1 flash per s econd)	The drive has failed, or a predictive failure alert has been received for this drive. A management applicati on has also identified the drive.
		Flashing amber (1 flash per second)	A predictive failure alert has been received for this dr ive. Replace the drive as soon as possible.
		Off	The drive is operating normally.
2	Online or Activity	Solid green	The drive is online and not active.
		Flashing green (1 flash per second)	The drive is doing one of the following: • Rebuilding or performing a RAID • Performing a stripe size migration • Performing a capacity expansion • Performing a logical drive extension • Erasing • Activating a replacement drive
		Flashing green (4 flashes per second)	The drive is operating normally.
		Off	The drive is not configured or is a spare drive.

PCIe4 slot description

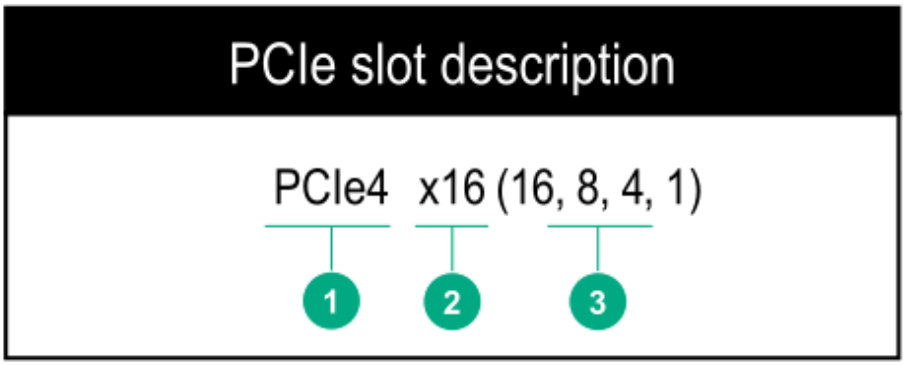

Item	Description	Definition
1	PCI Express version	Each PCIe version corresponds to a specific data transfer rate between the processor and peripheral devices. Gene rally, a version update corresponds to an increase in tran sfer rate. • PCIe 1.x • PCIe 2.x • PCIe 3.x • PCIe 4.x The PCIe technology is under constant development. For the latest information, see the **PCI-SIG website**.
2	Physical connector link width	PCIe devices communicate through a logical connection called an interconnect or link. At the physical level, a link is composed of one or more lanes. The number of lanes i s written with an x prefix with x16 being the largest size in common use. • x1 • x2 • x4 • x8 • x16
3	Negotiable link width	These numbers correspond to the maximum link bandwi dth supported by the slot.

M.2 pass-through module components

The dual-slot M.2 pass-through module supports NVMe SSDs in 2280 and 22110 form factors.

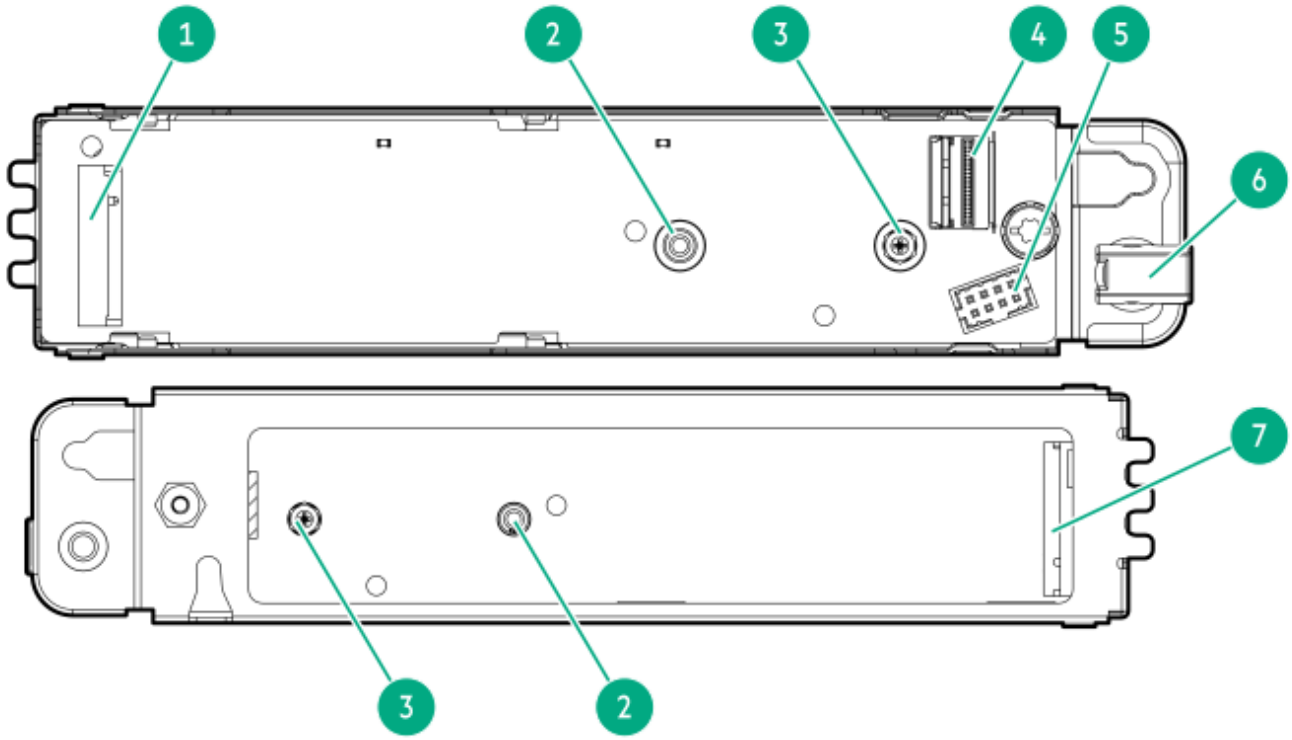

Item	Description
1	M.2 SSD slot 1
2	2280 standoff
3	22110 standoff
4	Data cable connector
5	Power cable connector
6	Retaining latch
7	M.2 SSD slot 2

Setup

Subtopics

Optional services
Setting up the server
Operational requirements

Optional services

Delivered by experienced, certified engineers, HPE support services help you keep your servers up and running with support packages tailored specifically for HPE ProLiant systems. HPE support services let you integrate both hardware and software support into a single package. A number of service level options are available to meet your business and IT needs.

HPE support services offer upgraded service levels to expand the standard product warranty with easy-to-buy, easy-to-use support packages that will help you make the most of your server investments. Some of the HPE support services for hardware, software, or both are:

- HPE Pointnext Tech Care – Keep systems running.

  The time commitment for this service might vary depending on the site's geographical region. For more service information available at your site, contact your local **HPE support center**.

- Deployment service for both hardware and software.
- HPE Education Services – Help train your IT staff.

For more information on HPE support services, see the HPE Pointnext website:

https://www.hpe.com/services

Setting up the server

Prerequisites

Before setting up the server:

- Read the operational requirements for the server:
  Operational requirements
- Read the safety and compliance information on the HPE website:
  http://www.hpe.com/support/safety-compliance-enterpriseproducts

Procedure

1. Unbox the server and verify the contents:

- A server
- A power cord
- Rack-mounting hardware
- Documentation

2. (Optional) Install hardware options.
3. Install the server in a rack.

   The rack procedures are included with the rack rails.

   a. Connect devices, cables, and cords to the server.

   b. Secure cables using the cable management arm.

4. Decide how to manage the server:

   - Locally: use a KVM switch or a connect a keyboard, monitor, and mouse.
   - Remotely: connect to the iLO web interface using remote console.

     a. Verify the iLO management port is connected to a secure network.

     b. Using a browser, navigate to the iLO web interface, and then log in.
     ```
     https://<iLO hostname or IP address>
     ```
     Note the following:

     - The hostname is on the serial pull tab.
     - If a DHCP server assigns the IP address, the IP address appears on the boot screen.
     - If a static IP address is assigned, use that IP address.
     - The default login credentials are on the serial label pull tab.

     c. In the side navigation, click the **Remote Console & Media** link, and then launch a remote console.

5. Press the Power On/Standby button.

   For remote management, use the iLO virtual power button.

Subtopics

Rack warnings and cautions
Server warnings and cautions
Electrostatic discharge

Rack warnings and cautions

WARNING:

When all components are removed, the server weighs 13.36 kg (29.46 lb). When all components are installed, the server can weigh up to 15.85 kg (35.94 lb).

Before configuring your rack solution, be sure to check the rack manufacturer weight limits and specifications. Failure to do so can result in physical injury or damage to the equipment and the facility.

WARNING:

The server is heavy. To reduce the risk of personal injury or damage to the equipment, do the following:

- Observe local occupational health and safety requirements and guidelines for manual material handling.
- Get help to lift and stabilize the product during installation or removal, especially when the product is not fastened to the rails. The server weighs more than 13.36 kg (29.46 lb), so at least two people must lift the server into the rack together. An additional person may be required to help align the server if the server is installed higher than chest level.
- Use caution when installing the server in or removing the server from the rack.
- Adequately stabilized the rack before extending a component outside the rack. Extend only one component at a time. A rack may become unstable if more than one component is extended.
- Do not stack anything on top of rail-mounted component or use it as a work surface when extended from the rack.

WARNING:

To reduce the risk of personal injury or damage to the equipment, be sure that:

- The rack has anti-tip measures in place. Such measures include floor-bolting, anti-tip feet, ballast, or a combination as specified by the rack manufacturer and applicable codes.
- The leveling jacks (feet) are extended to the floor.
- The full weight of the rack rests on the leveling jacks (feet).
- The stabilizing feet are attached to the rack if it is a single-rack installation

Server warnings and cautions

WARNING:

To reduce the risk of personal injury, electric shock, or damage to the equipment, disconnect the power cord to remove power from the server. Pressing the Power On/Standby button does not shut off system power completely. Portions of the power supply and some internal circuitry remain active until AC power is removed.

WARNING: To reduce the risk of personal injury from hot surfaces, allow the drives and the internal system components to cool before touching them.

WARNING:

To reduce the risk of fire or burns after removing the energy pack:

- Do not disassemble, crush, or puncture the energy pack.
- Do not short external contacts.
- Do not dispose of the energy pack in fire or water.
- Do not expose the energy pack to low air pressure as it might lead to explosion or leakage of flammable liquid or gas.
- Do not expose the energy pack to temperatures higher than 60°C (140°F).

After power is disconnected, battery voltage might still be present for 1s to 160s.

CAUTION:

Protect the server from power fluctuations and temporary interruptions with a regulating UPS. This device protects the hardware from damage caused by power surges and voltage spikes and keeps the server in operation during a power failure.

CAUTION:

To prevent damage to electrical components, properly ground the server before beginning any installation, removal, or replacement procedure. Improper grounding can cause electrostatic discharge.

CAUTION:

To avoid data loss, Hewlett Packard Enterprise recommends that you back up all server data before installing or removing a hardware option, or performing a server maintenance or troubleshooting procedure.

Electrostatic discharge

Be aware of the precautions you must follow when setting up the system or handling components. A discharge of static electricity from a finger or other conductor may damage system boards or other static-sensitive devices. This type of damage may reduce the life expectancy of the system or component.

To prevent electrostatic damage:

- Avoid hand contact by transporting and storing products in static-safe containers.
- Keep electrostatic-sensitive parts in their containers until they arrive at static-free workstations.
- Place parts on a grounded surface before removing them from their containers.
- Avoid touching pins, leads, or circuitry.
- Always be properly grounded when touching a static-sensitive component or assembly. Use one or more of the following methods when handling or installing electrostatic-sensitive parts:
    - Use a wrist strap connected by a ground cord to a grounded workstation or computer chassis. Wrist straps are flexible straps with a minimum of 1 megohm ±10 percent resistance in the ground cords. To provide proper ground, wear the strap snug against the skin.
    - Use heel straps, toe straps, or boot straps at standing workstations. Wear the straps on both feet when standing on conductive floors or dissipating floor mats.
    - Use conductive field service tools.
    - Use a portable field service kit with a folding static-dissipating work mat.

  If you do not have any of the suggested equipment for proper grounding, have an authorized reseller install the part.

For more information on static electricity or assistance with product installation, contact an authorized reseller.

Operational requirements

When preparing the site and planning the installation for the HPE ProLiant RL300 Gen11 Server, be sure to observe the following general operational requirements:

- Space and airflow requirements
- Temperature requirements

- Power requirements
- Electrical grounding requirements

For server-specific environmental requirements, see Environmental specifications.

Subtopics

Space and airflow requirements
Temperature requirements
Power requirements
Electrical grounding requirements

Space and airflow requirements

To allow for servicing and adequate airflow, observe the following space and airflow requirements when deciding where to install a rack:

- Leave a minimum clearance of 63.5 cm (25 in) in front of the rack.
- Leave a minimum clearance of 76.2 cm (30 in) behind the rack.
- Leave a minimum clearance of 121.9 cm (48 in) from the back of the rack to the back of another rack or row of racks.

Hewlett Packard Enterprise servers draw in cool air through the front door and expel warm air through the rear door. Therefore, the front and rear rack doors must be adequately ventilated to allow ambient room air to enter the cabinet, and the rear door must be adequately ventilated to allow the warm air to escape from the cabinet.

CAUTION: To prevent improper cooling and damage to the equipment, do not block the ventilation openings.

When vertical space in the rack is not filled by a server or rack component, the gaps between the components cause changes in airflow through the rack and across the servers. Cover all gaps with blanking panels to maintain proper airflow.

CAUTION: Always use blanking panels to fill empty vertical spaces in the rack. This arrangement ensures proper airflow. Using a rack without blanking panels results in improper cooling that can lead to thermal damage.

The 9000 and 10000 Series Racks provide proper server cooling from flow-through perforations in the front and rear doors that provide 64 percent open area for ventilation.

CAUTION:

If a third-party rack is used, observe the following additional requirements to ensure adequate airflow and to prevent damage to the equipment:

- Front and rear doors—If the 42U rack includes closing front and rear doors, you must allow 5,350 sq cm (830 sq in) of holes evenly distributed from top to bottom to permit adequate airflow (equivalent to the required 64 percent open area for ventilation).
- Side—The clearance between the installed rack component and the side panels of the rack must be a minimum of 7 cm (2.75 in).

Temperature requirements

To ensure continued safe and reliable equipment operation, install or position the system in a well-ventilated, climate-controlled environment.

The maximum recommended ambient operating temperature (TMRA) for most server products is 35°C (95°F). The temperature in the room where the rack is located must not exceed 35°C (95°F).

CAUTION: To reduce the risk of damage to the equipment when installing third-party options:

- Do not permit optional equipment to impede airflow around the server or to increase the internal rack temperature beyond the maximum allowable limits.
- Do not exceed the manufacturer's TMRA.

Power requirements

Installation of this equipment must comply with local and regional electrical regulations governing the installation of information technology equipment by licensed electricians. This equipment is designed to operate in installations covered by NFPA 70, 1999 Edition (National Electric Code) and NFPA-75, 1992

(code for Protection of Electronic Computer/Data Processing Equipment). For electrical power ratings on options, refer to the product rating label or the user documentation supplied with that option.

WARNING: To reduce the risk of personal injury, fire, or damage to the equipment, do not overload the AC supply branch circuit that provides power to the rack. Consult the electrical authority having jurisdiction over wiring and installation requirements of your facility.

CAUTION: Protect the server from power fluctuations and temporary interruptions with a regulating uninterruptible power supply. This device protects the hardware from damage caused by power surges and voltage spikes and keeps the system in operation during a power failure.

Electrical grounding requirements

The server must be grounded properly for proper operation and safety. In the United States, you must install the equipment in accordance with NFPA 70, National Electric Code Article 250, as well as any local and regional building codes. In Canada, you must install the equipment in accordance with Canadian Standards Association, CSA C22.1, Canadian Electrical Code. In all other countries, you must install the equipment in accordance with any regional or national electrical wiring codes, such as the International Electrotechnical Commission (IEC) Code 364, parts 1 through 7. Furthermore, you must be sure that all power distribution devices used in the installation, such as branch wiring and receptacles, are listed or certified grounding-type devices.

Because of the high ground-leakage currents associated with multiple servers connected to the same power source, Hewlett Packard Enterprise recommends the use of a PDU that is either permanently wired to the building's branch circuit or includes a nondetachable cord that is wired to an industrial-style plug. NEMA locking-style plugs or those complying with IEC 60309 are considered suitable for this purpose. Using common power outlet strips for the server is not recommended.

Operations

Subtopics

Power up the server
Power down the server
Extend the server from the rack
Remove the server from the rack
Remove the access panel
Install the access panel
Release the cable management arm

Removing the air baffle
Removing a riser cage

Power up the server

About this task

To power up the server, use one of the following methods:

- Press the Power On/Standby button.
- Use the virtual power button through iLO.

Power down the server

Before powering down the server for any upgrade or maintenance procedures, perform a backup of critical server data and programs.

> **IMPORTANT:**
> When the server is in standby mode, auxiliary power is still being provided to the system.

To power down the server, use one of the following methods:

- Press and release the Power On/Standby button.
  This method activates a controlled shutdown of applications and the OS before the server enters standby mode. It can also activate a shutdown behavior governed by an OS configuration or policy.
- Press and hold the Power On/Standby button for more than 4 seconds to force the server to enter standby mode.
  This method forces the server to enter standby mode without properly exiting applications and the OS. If an application stops responding, you can use this method to force a shutdown.
- Use a virtual power button selection through iLO.
  This method initiates a controlled remote shutdown of applications and the OS before the server enters standby mode.

Before proceeding, verify that the server is in standby mode by observing that the system power LED is amber.

Extend the server from the rack

Prerequisites

You might need a T-25 Torx screwdriver to loosen the shipping screws.

About this task

WARNING: To reduce the risk of personal injury or equipment damage, be sure that the rack is adequately stabilized before extending anything from the rack.

Procedure

Extend the server from the rack.

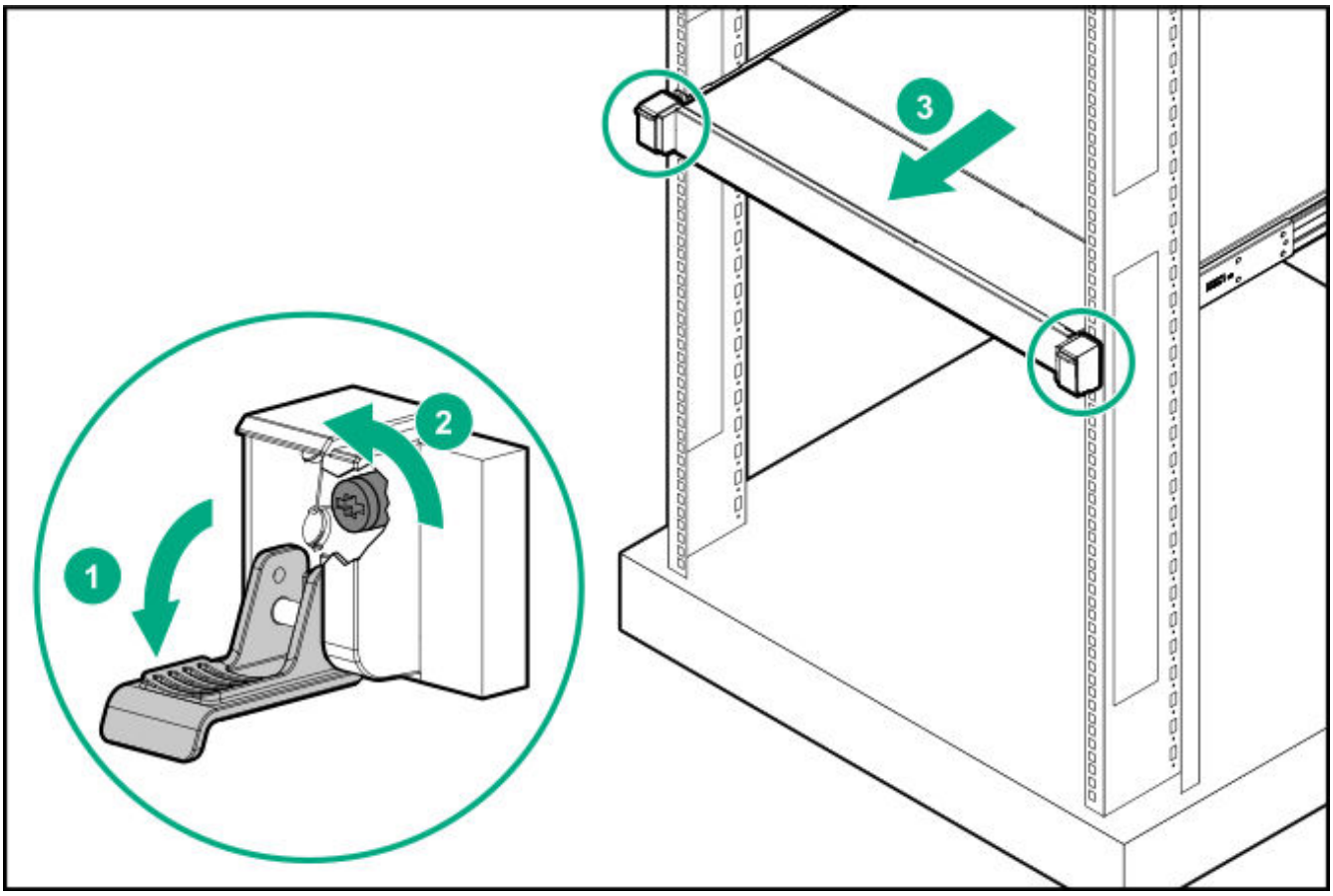

Remove the server from the rack

Prerequisites

Before you perform this procedure, review the:

- Rack warnings and cautions
- Server warnings and cautions

About this task

WARNING: To reduce the risk of personal injury or equipment damage, be sure that the rack is adequately stabilized before extending anything from the rack.

Procedure

1. Power down the server.
2. Release the cable management arm.
3. Disconnect the cabling from the rear panel.
4. Extend the server from the rack.
5. Remove the server from the rack:

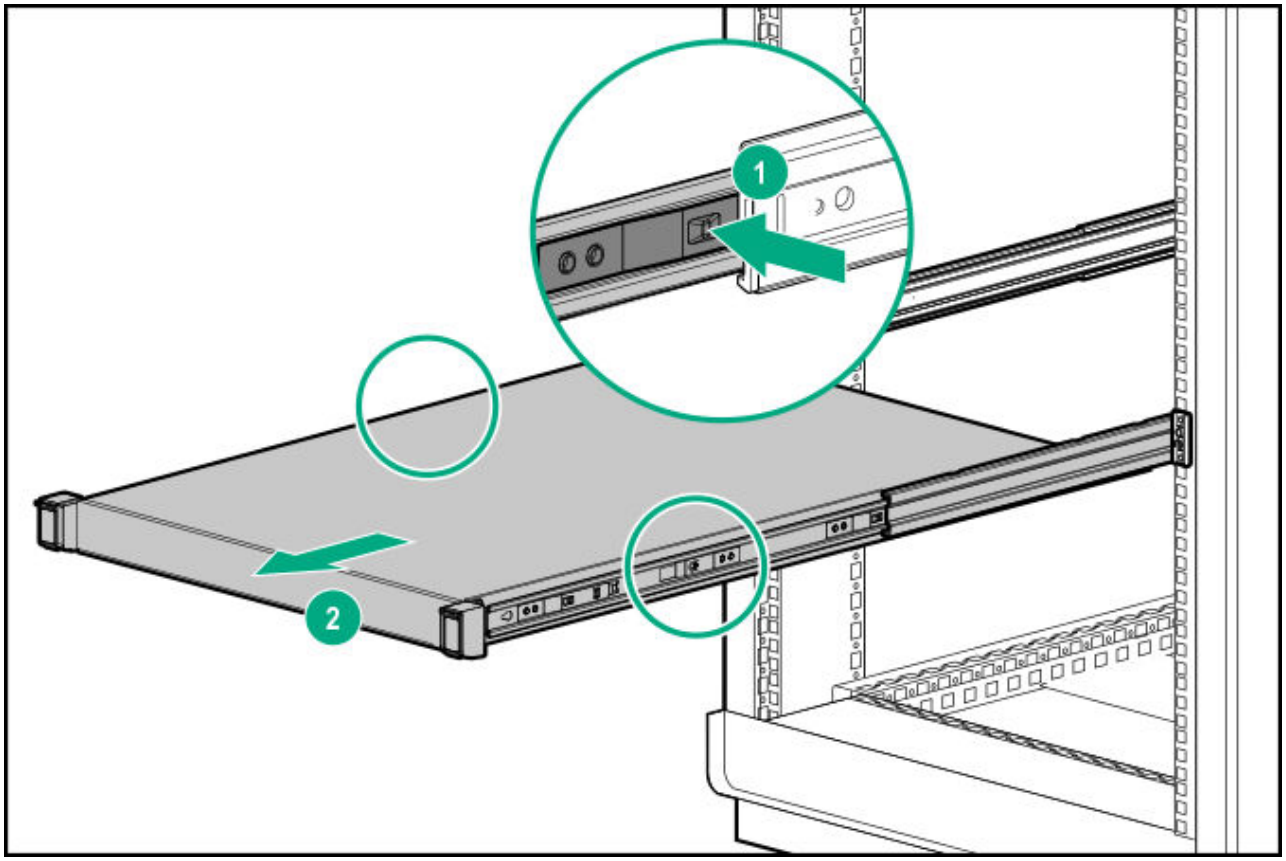

6. Place the server on a sturdy, level surface.

Remove the access panel

About this task

WARNING: To reduce the risk of personal injury from hot surfaces, allow the drives and the internal system components to cool before touching them.

CAUTION: Do not operate the server for long periods with the access panel open or removed. Operating the server in this manner results in improper airflow and improper cooling that can lead to thermal damage.

Procedure

1. Power down the server.
2. Extend the server from the rack.
3. Open or unlock the locking latch, slide the access panel to the rear of the chassis, and remove the access panel.

Install the access panel

Procedure

1. Place the access panel on top of the server with the latch open.

   Allow the panel to extend past the rear of the server approximately 1.25 cm (0.5 in).
2. Push down on the latch.

   The access panel slides to a closed position.
3. Tighten the security screw on the latch, if needed.

Release the cable management arm

Procedure

Release the cable management arm and swing away from the rack.

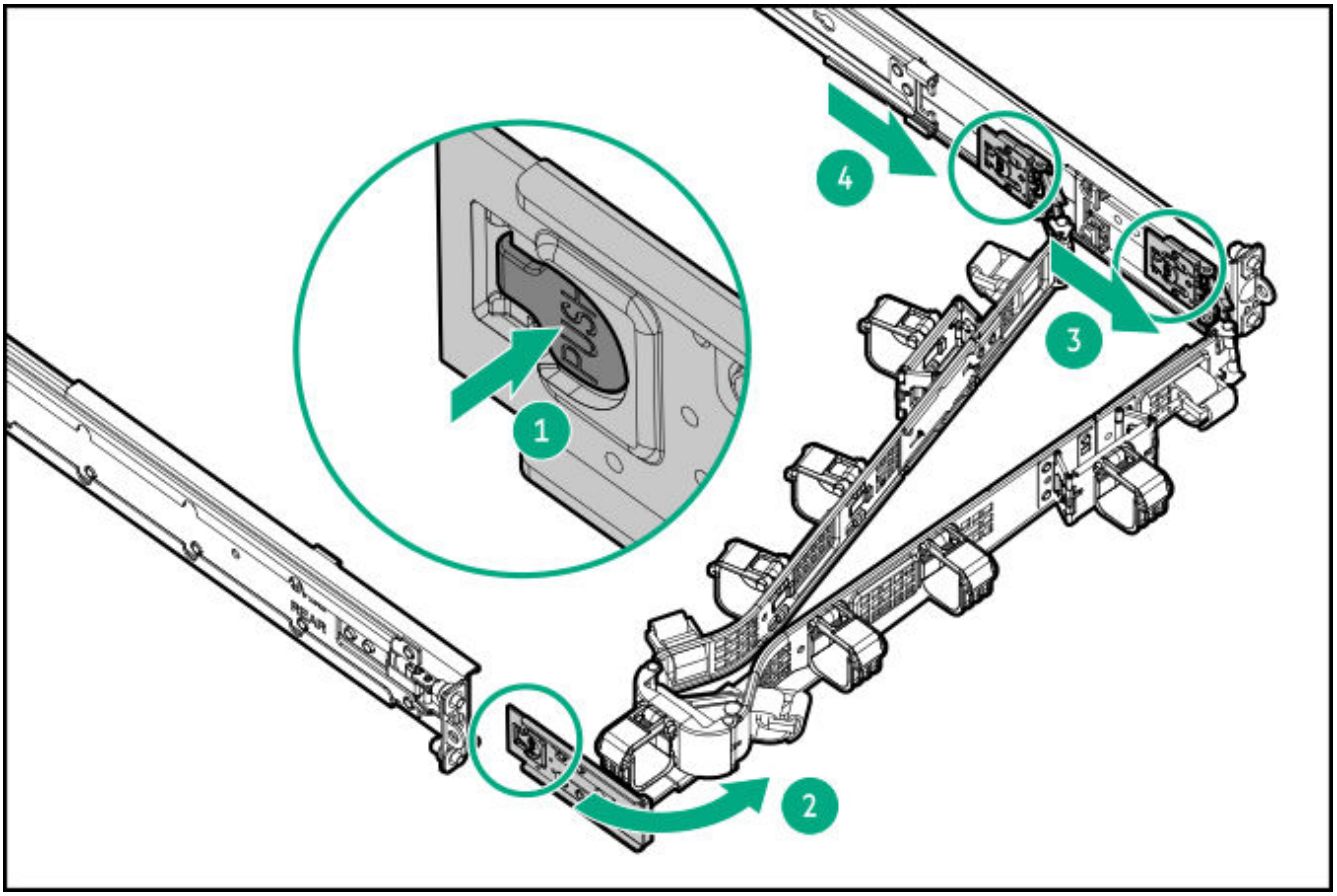

Removing the air baffle

About this task

CAUTION: For proper cooling, do not operate the server without the access panel, baffles, expansion slot covers, or blanks installed. If the server supports hot-plug components, minimize the amount of time the access panel is open.

Procedure

1. Power down the server.
2. Remove all power:

a. Disconnect each power cord from the power source.

b. Disconnect each power cord from the server.

3. Do one of the following:

   a. Extend the server from the rack.

   b. Remove the server from the rack.

4. Remove the access panel.

5. Remove the air baffle.

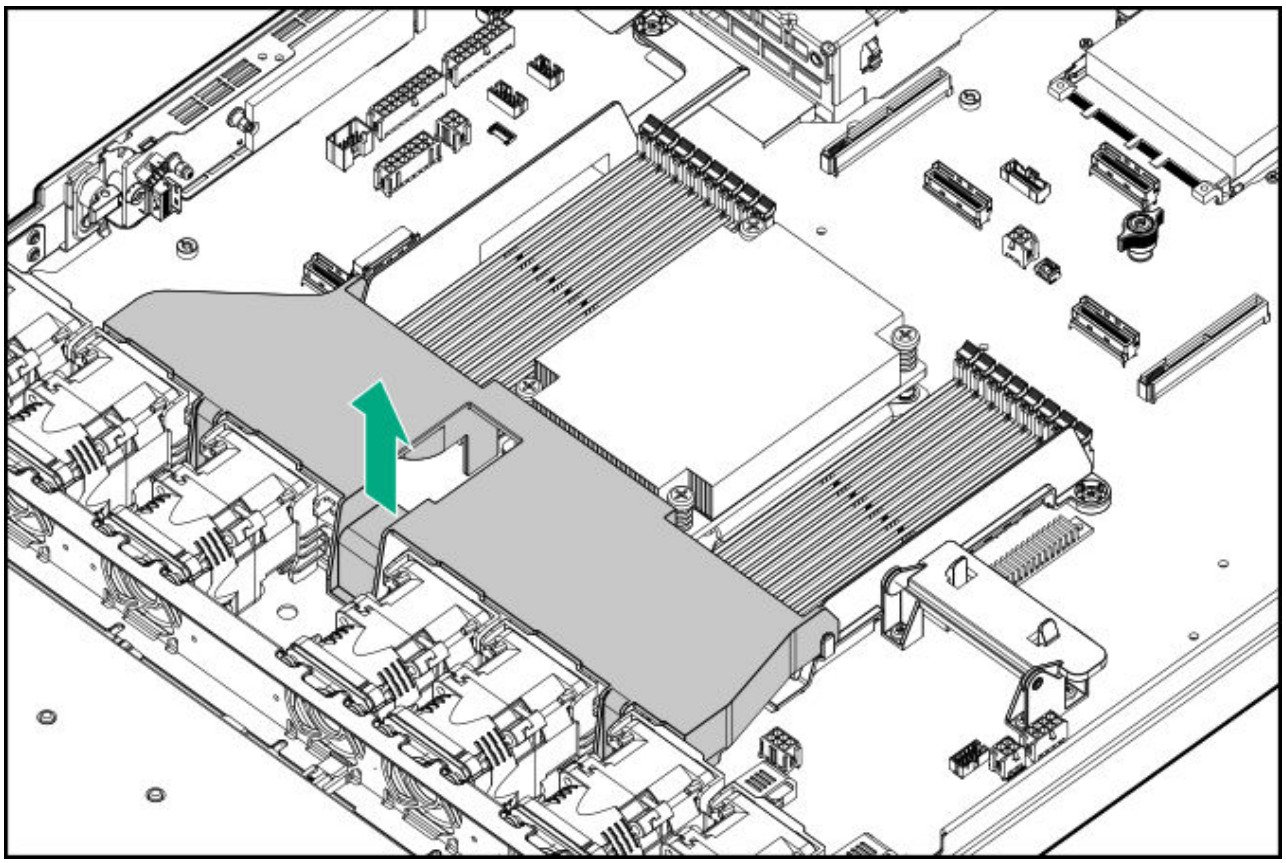

Results

To replace the component, reverse the removal procedure.

Removing a riser cage

About this task

> **CAUTION:** To prevent damage to the server or expansion boards, power down the server and remove all AC power cords before removing or installing the riser cage.

Procedure

1. Power down the server.
2. Remove all power:
   a. Disconnect each power cord from the power source.
   b. Disconnect each power cord from the server.
3. Do one of the following:
   a. Extend the server from the rack.
   b. Remove the server from the rack.
4. Remove the access panel.
5. If a full-length expansion card is installed in the primary riser, open the PCIe support bracket.

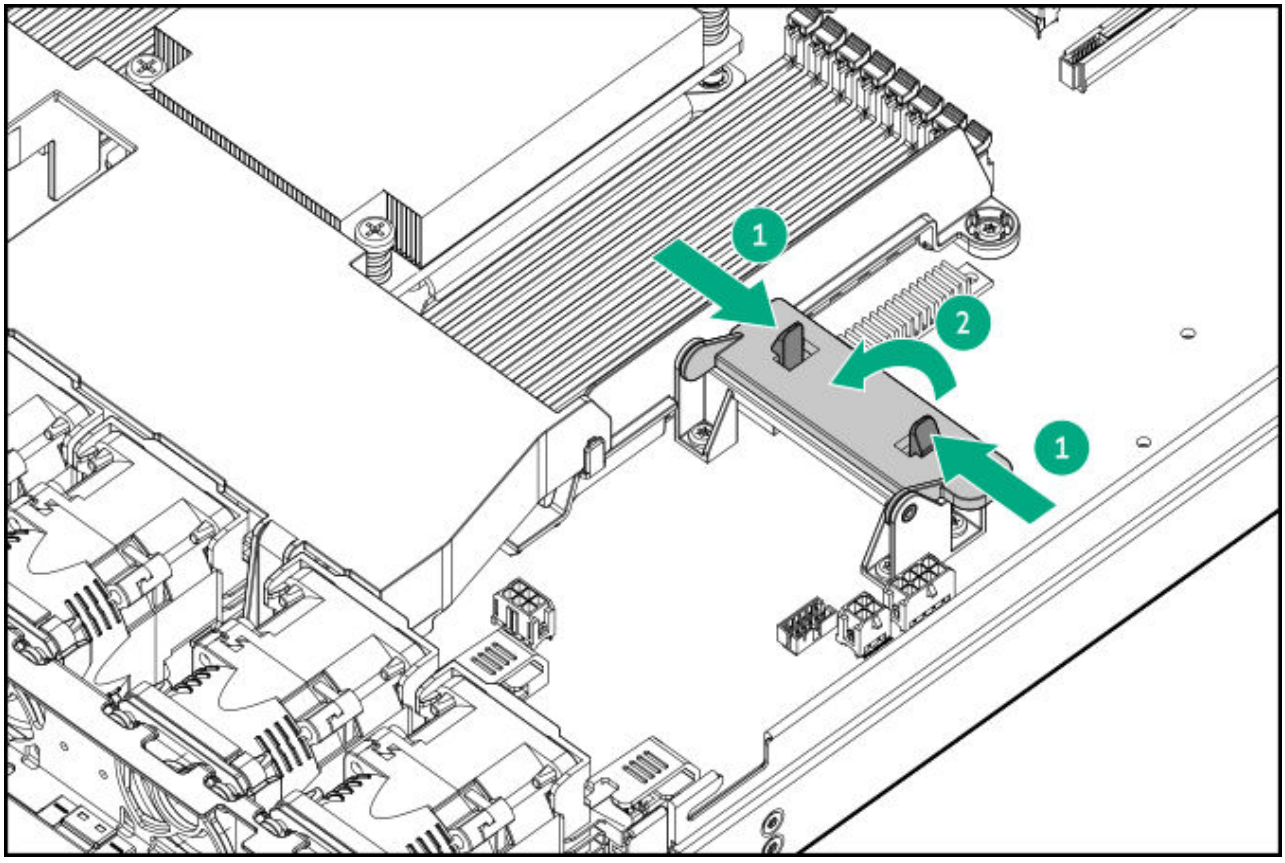

6. Remove the riser cage.

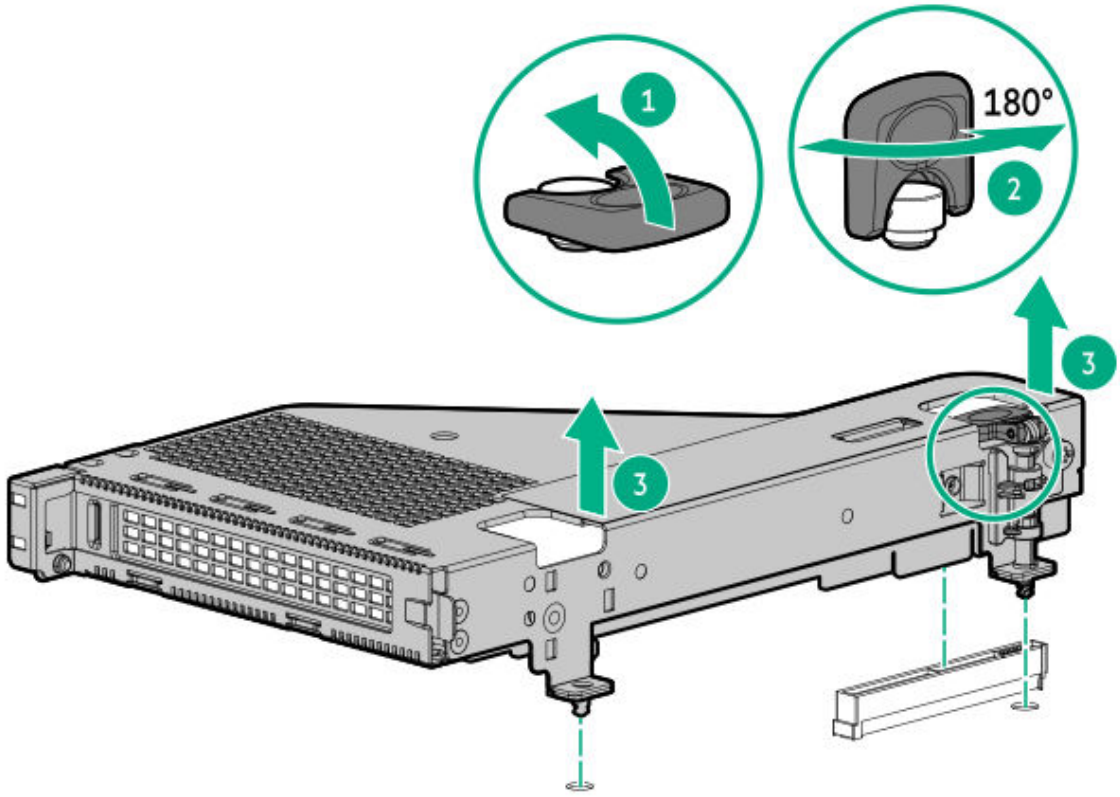

Results

To replace the component, reverse the removal procedure.

Hardware options installation

Subtopics

Hewlett Packard Enterprise product QuickSpecs
Introduction
Rack mounting options
Power supply options
Fan options
Memory options
Drive options
Riser options
Installing the M.2 pass-through module
Installing an OCP 3.0 adapter card
Installing the chassis intrusion detection switch
Installing the serial port

HPE Trusted Platform Module 2.0

Hewlett Packard Enterprise product QuickSpecs

For more information about product features, specifications, options, configurations, and compatibility, see the product QuickSpecs on the Hewlett Packard Enterprise website (**https://www.hpe.com/info/qs**).

Introduction

Install any hardware options before initializing the server. If multiple options are being installed, read the installation instructions for all the hardware options to identify similar steps and streamline the installation process.

WARNING: To reduce the risk of personal injury from hot surfaces, allow the drives and the internal system components to cool before touching them.

CAUTION: To prevent damage to electrical components, properly ground the server before beginning any installation procedure. Improper grounding can cause electrostatic discharge.

Rack mounting options

Use the quick-deploy, toolless HPE rack rail option to install the server in a standard four-post rack. The rail design supports installation on rack of different mounting interfaces.

For cable management, the rack rail kit might include one or both of the following options:

- Rack rail hoop-and-loop strap
- Cable management arm

Subtopics

Rack mounting interfaces
Rack rail options
Rail identification markers
Installing the rack rails
Installing the server into the rack

Installing the rack rail hook-and-loop strap
Installing the cable management arm

Rack mounting interfaces

The rack rails can be installed in a rack that has the following mounting interfaces:

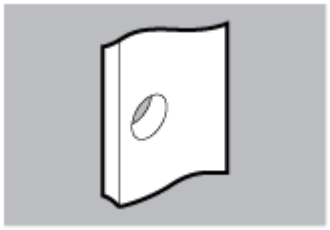	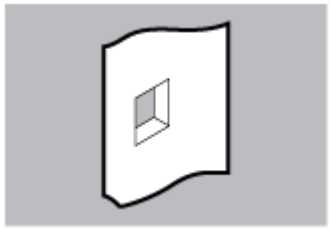	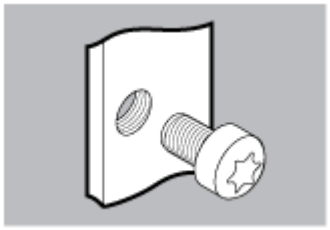
Round-hole	Square-hole	Threaded round-hole

The illustrations used in this procedure show an icon on the upper right corner of the image. This icon indicates the type of mounting interface for which the action illustrated in the image is valid.

Rack rail options

This server supports the following rack rail options:

- Rack rail option #2

Rail identification markers

The rack rail option support is dependent on these two factors:

- The height and weight of the chassis as determined by the front- and rear-end server configurations.
- The depth of the chassis as measured from the edge of the front panel (without the front bezel) to the edge of the rear panel.

To ensure compatibility between the rack rails and the server, verify that the rail number labels on the chassis match the ones stamped on the rails.

- Rail number labels on the chassis

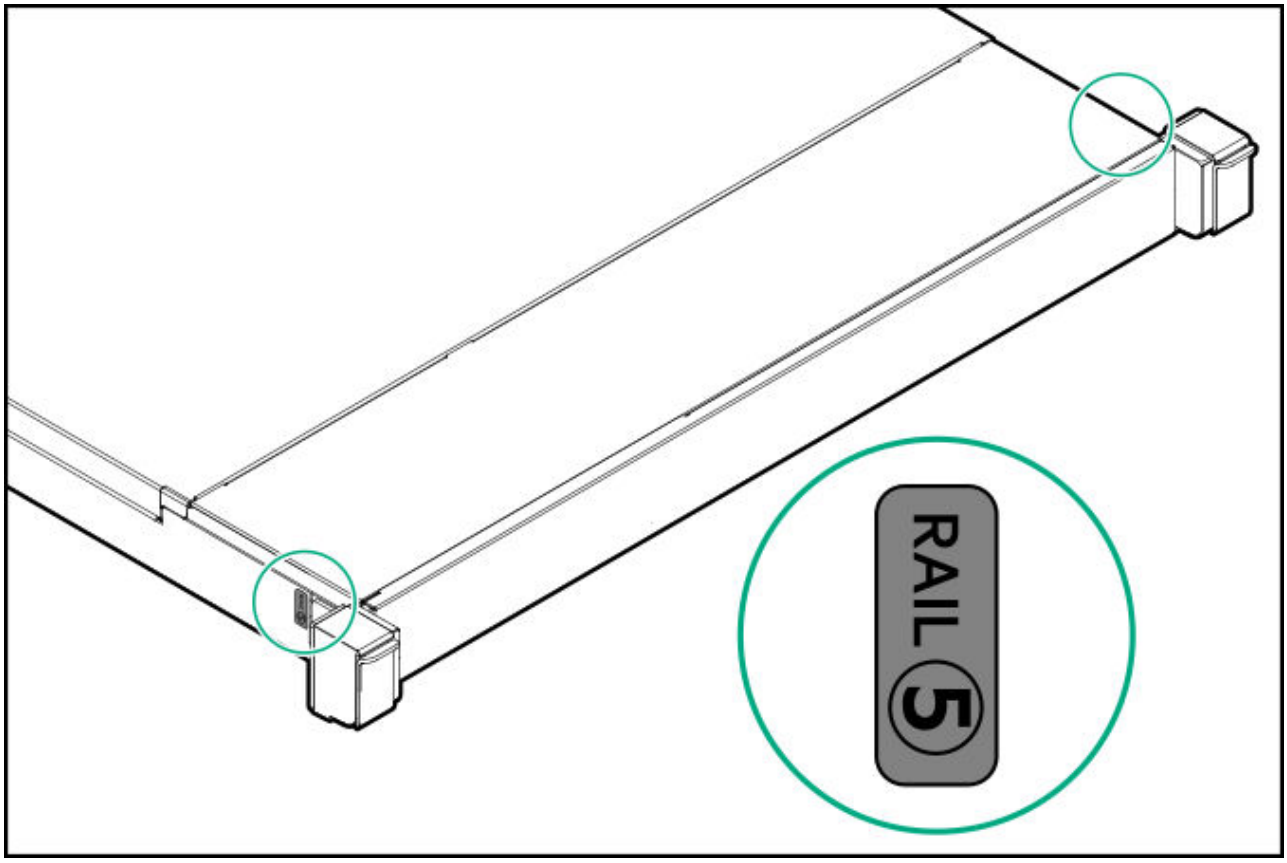

Installing the rack rails

Prerequisites

- Make sure that the rail option is compatible with the server configuration.
- If you are installing the server in a threaded round-hole rack, be sure to have a small slotted screwdriver.

Procedure

1. Install the inner rails on the server.

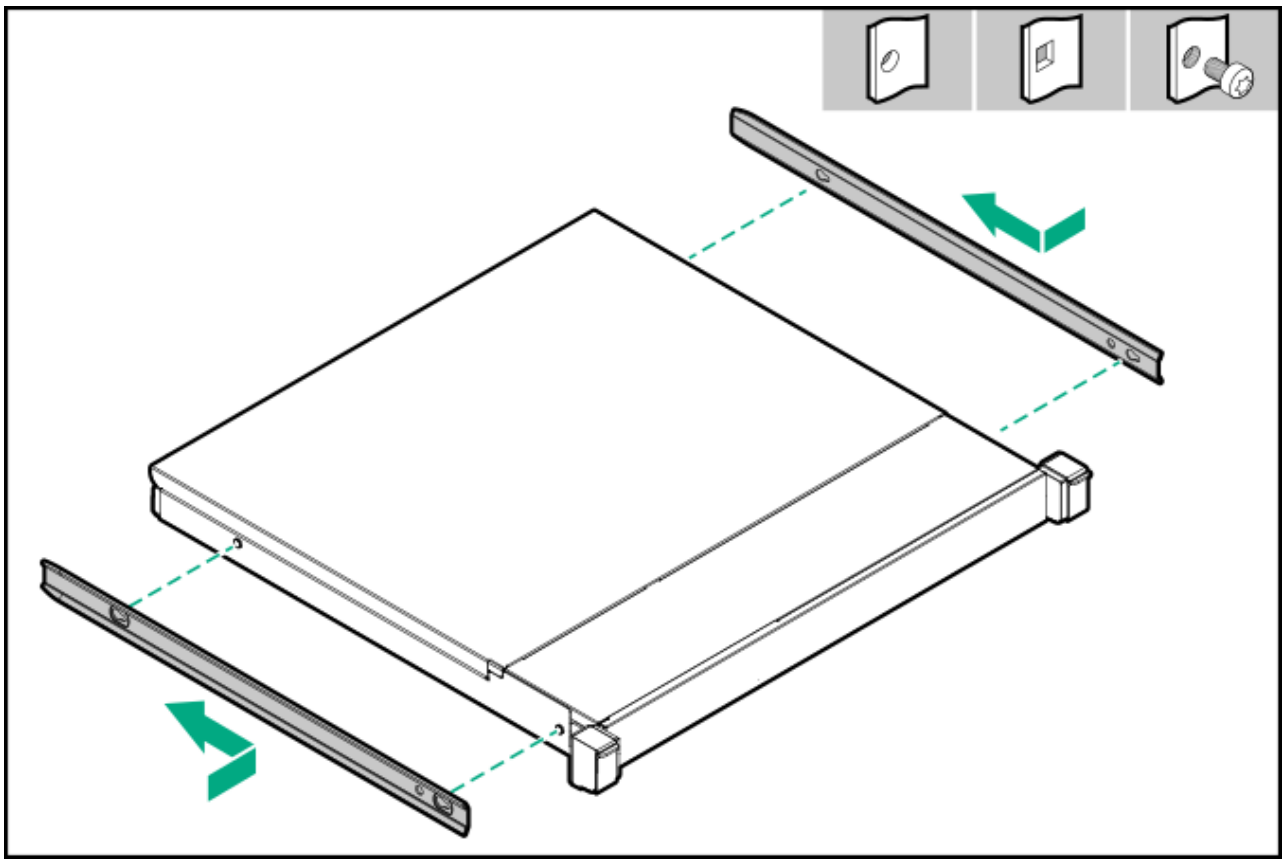

2. Identify the rack mounting rails.
   - The front end of the rails is marked as **FRONT LEFT** or **FRONT RIGHT**.
   - The other end of the rails is marked as **REAR**.

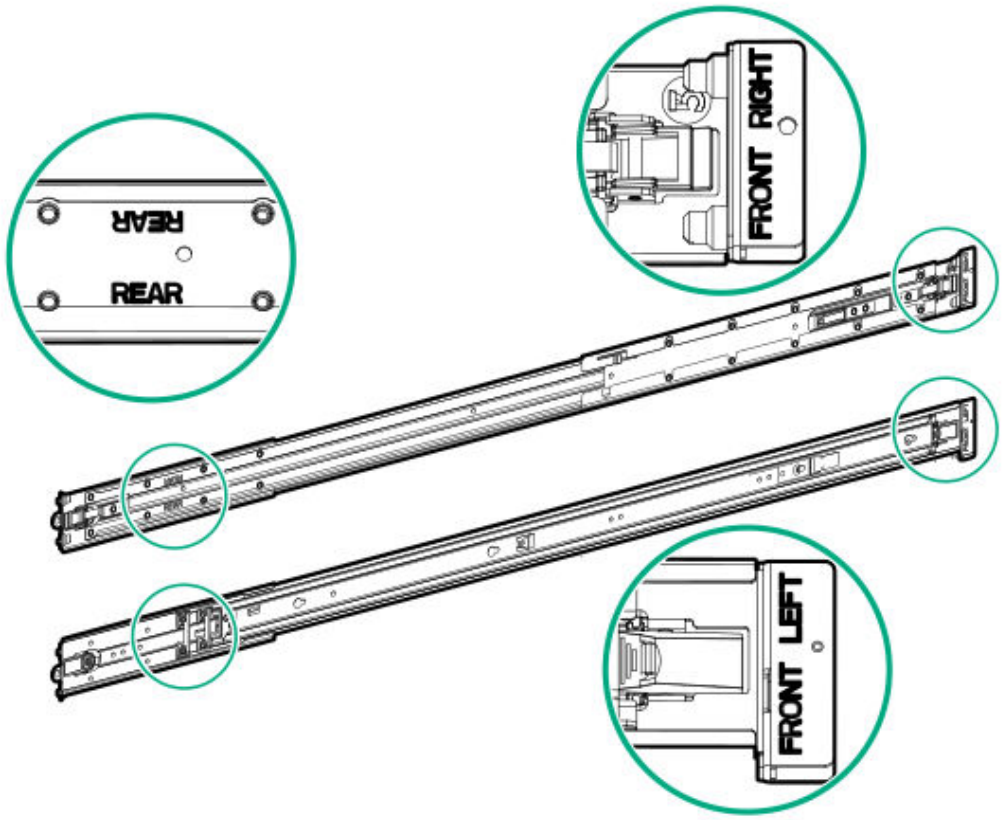

3. Extend the mounting rails to align with the depth of the rack.
4. Install the mounting rails.
    - For round-hole or square-hole racks:

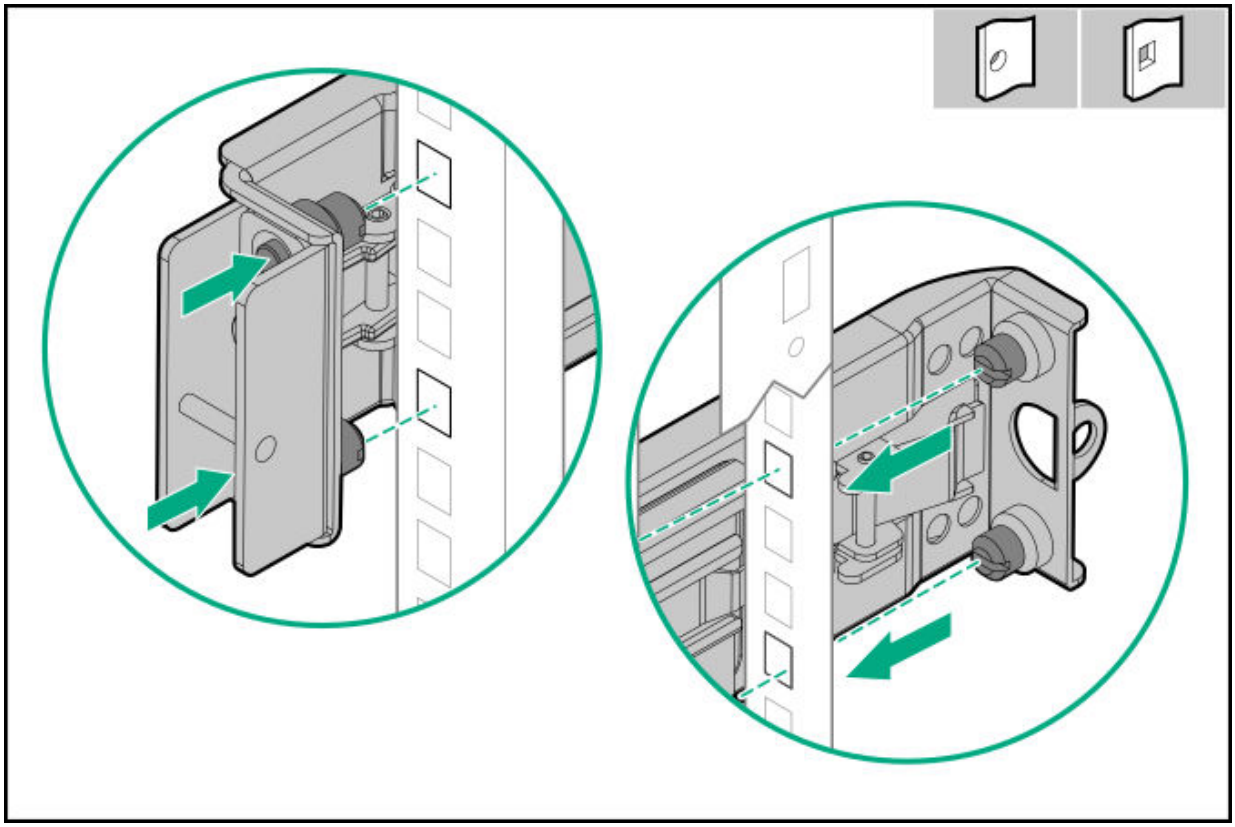

- For threaded round-hole racks:

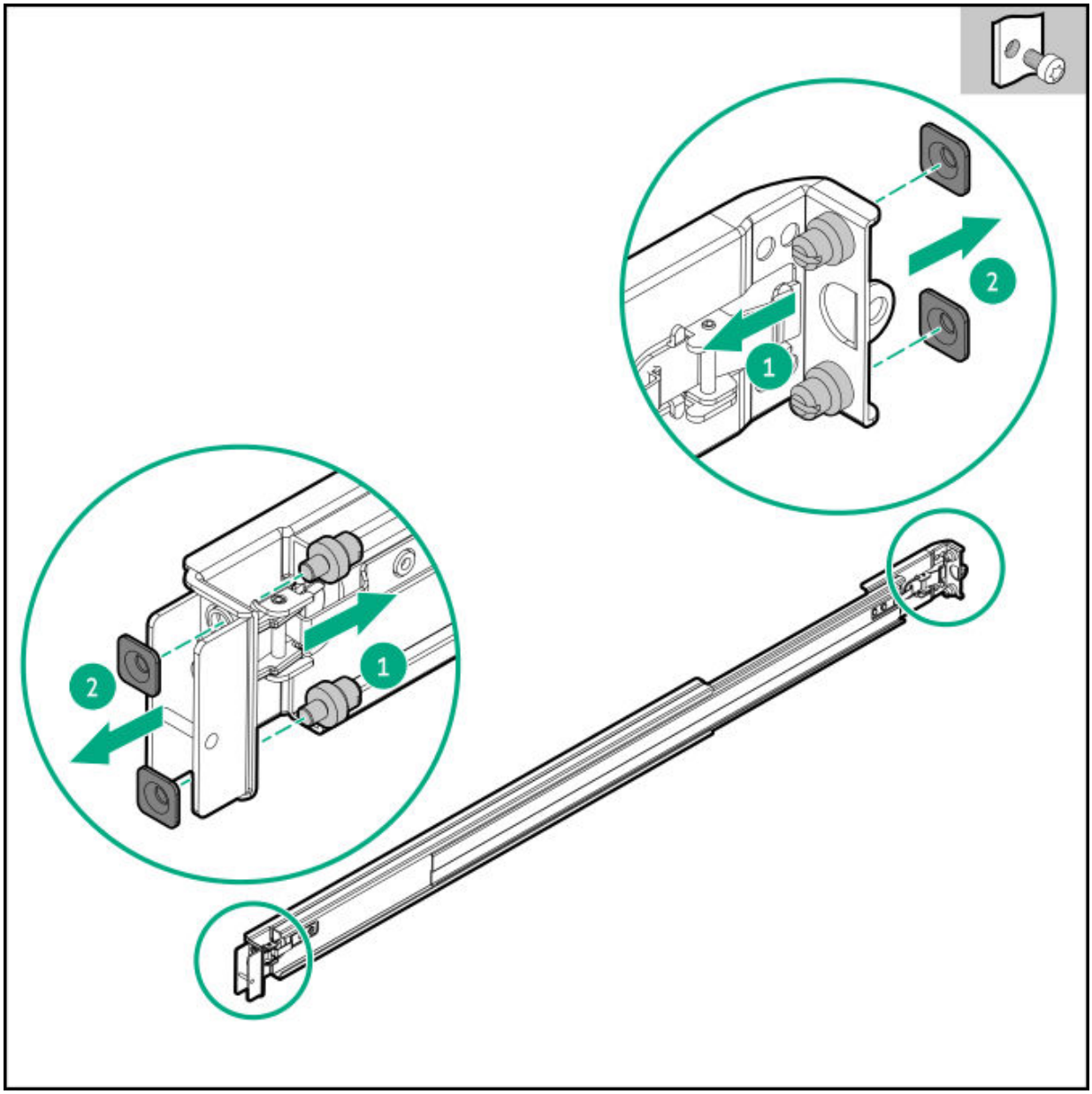
2
1
2
1

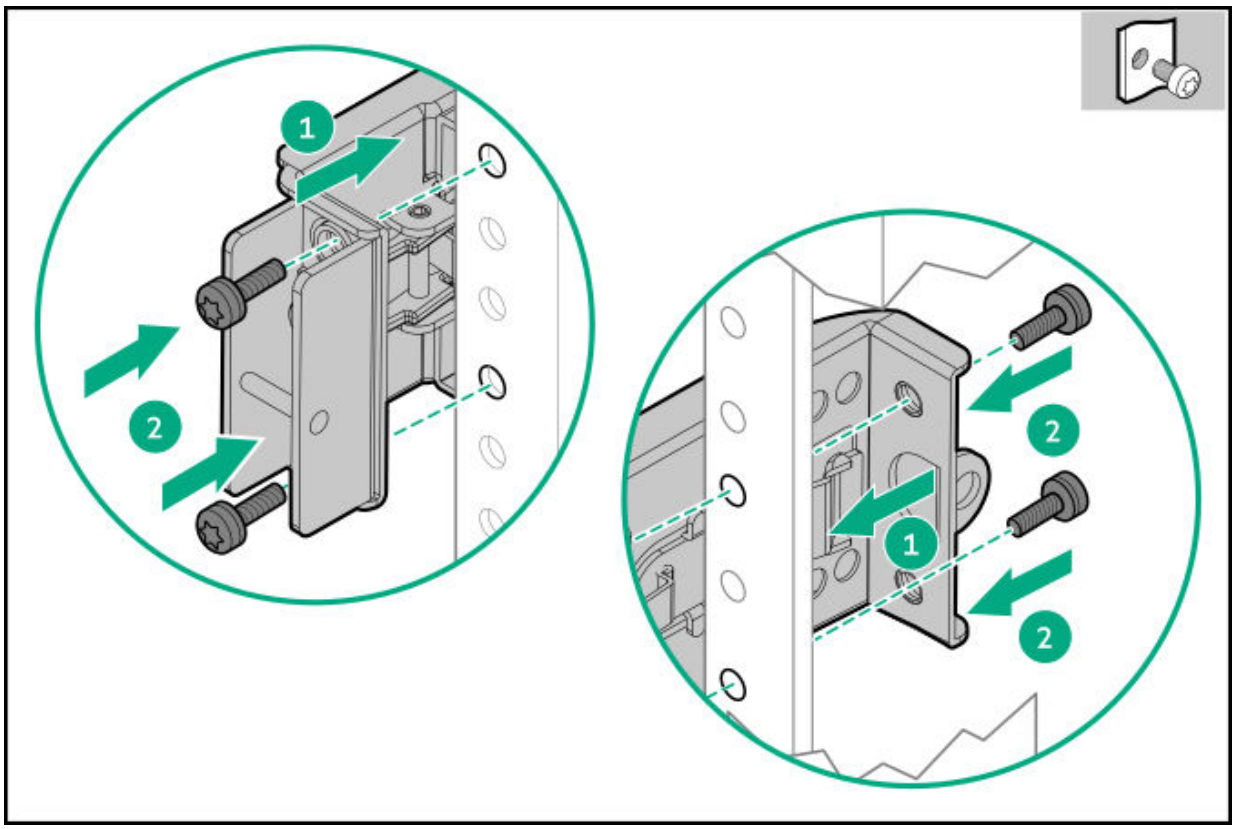

5. Install the server into the rack.

Installing the server into the rack

Prerequisites

- Before you perform this procedure, review the:
  - Rack warnings and cautions
  - Server warnings and cautions
  - Space and airflow requirements
- A fully populated server is heavy. Hewlett Packard Enterprise recommends removing the external chassis components before installing the server into a rack.
- Hewlett Packard Enterprise recommends having at least two people to install the server into the rack: one person to support the server weight, and the other to align the chassis into the rack rail slots.

Procedure

1. Extend the slide rails out on the mounting rails until they hit the internal stops and lock into place.

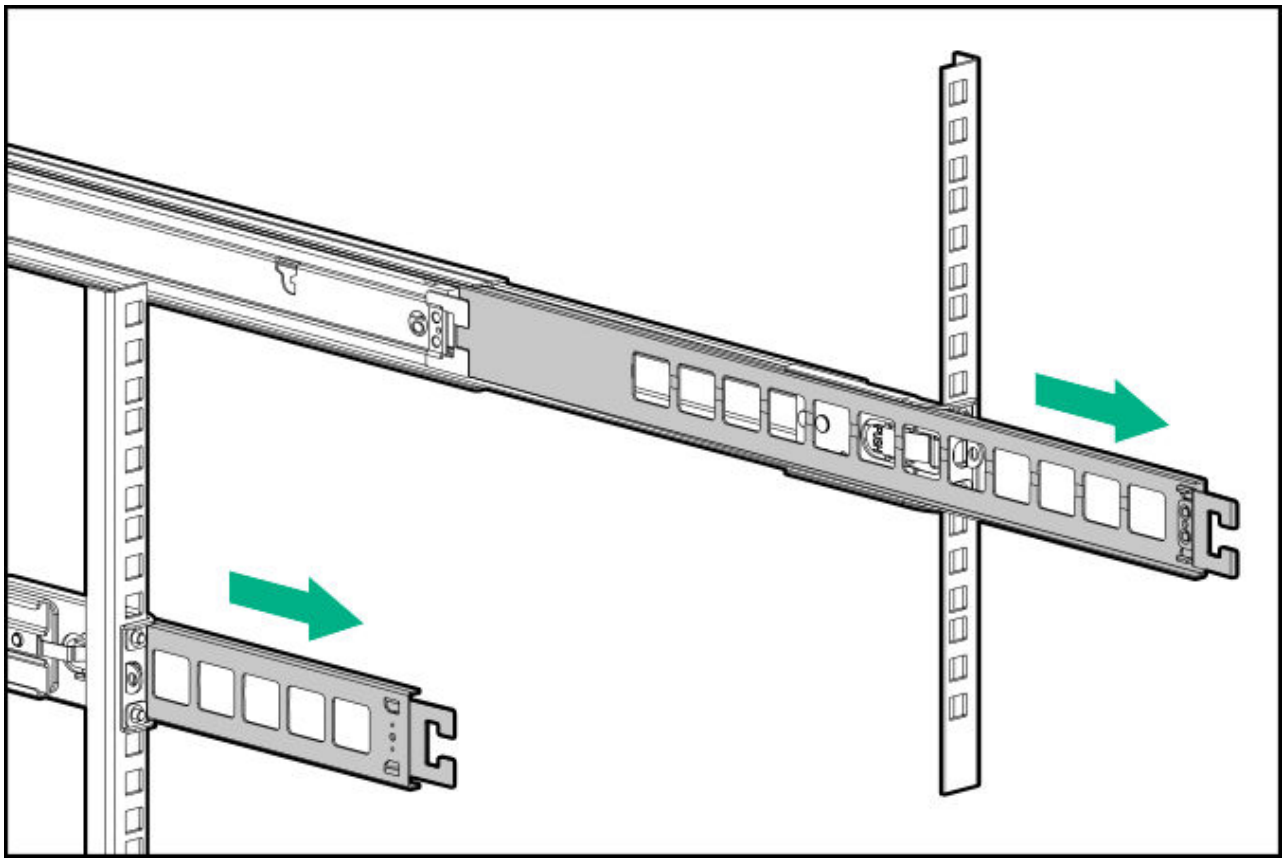

2. Install the server into the rack:
   a. Insert the inner rails into the slide rails (callout 1).
   b. Slide the server into the rack until the chassis ears are flush against the rack posts (callout 2).

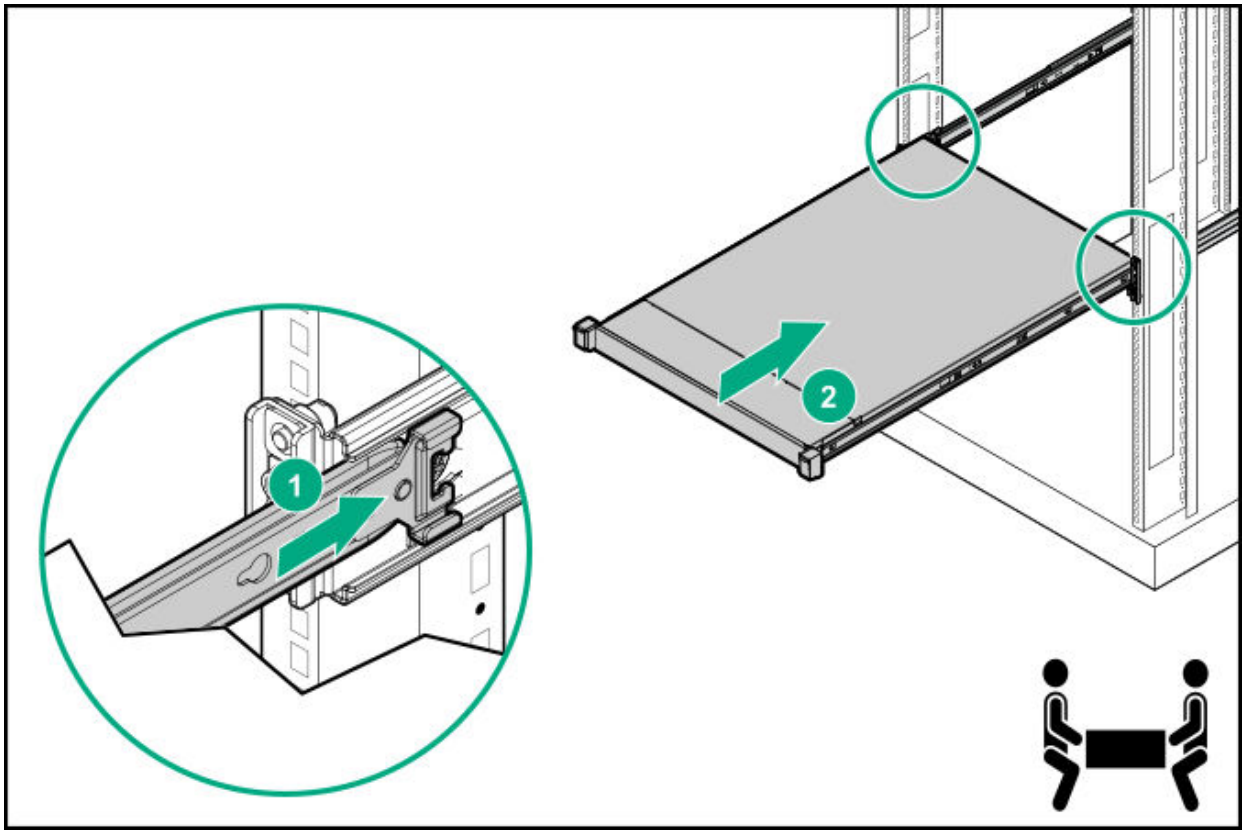

3. Connect all peripheral cables to the server.
4. Connect the power cords:
   a. Connect each power cord to the server.
   b. Connect each power cord to the power source.
5. Employ industry best practices in routing and managing the peripheral cables and power cords. Do one of the following:
   - Install the rack rail hook-and-loop strap.
   - Install the cable management arm.

Installing the rack rail hook-and-loop strap

About this task

If you do not require in-rack serviceability for your rack-mounted server, use the rack rail hook-and-loop strap, instead of a CMA, to manage the rear panel cables. The hook-and-loop strap can be installed on either the left or right rack mounting rail.

Procedure

1. Attach the strap carabiner to the rack mounting rail.
2. Bundle the rear panel power cords and peripheral cables, and then wrap the strap around the cables.

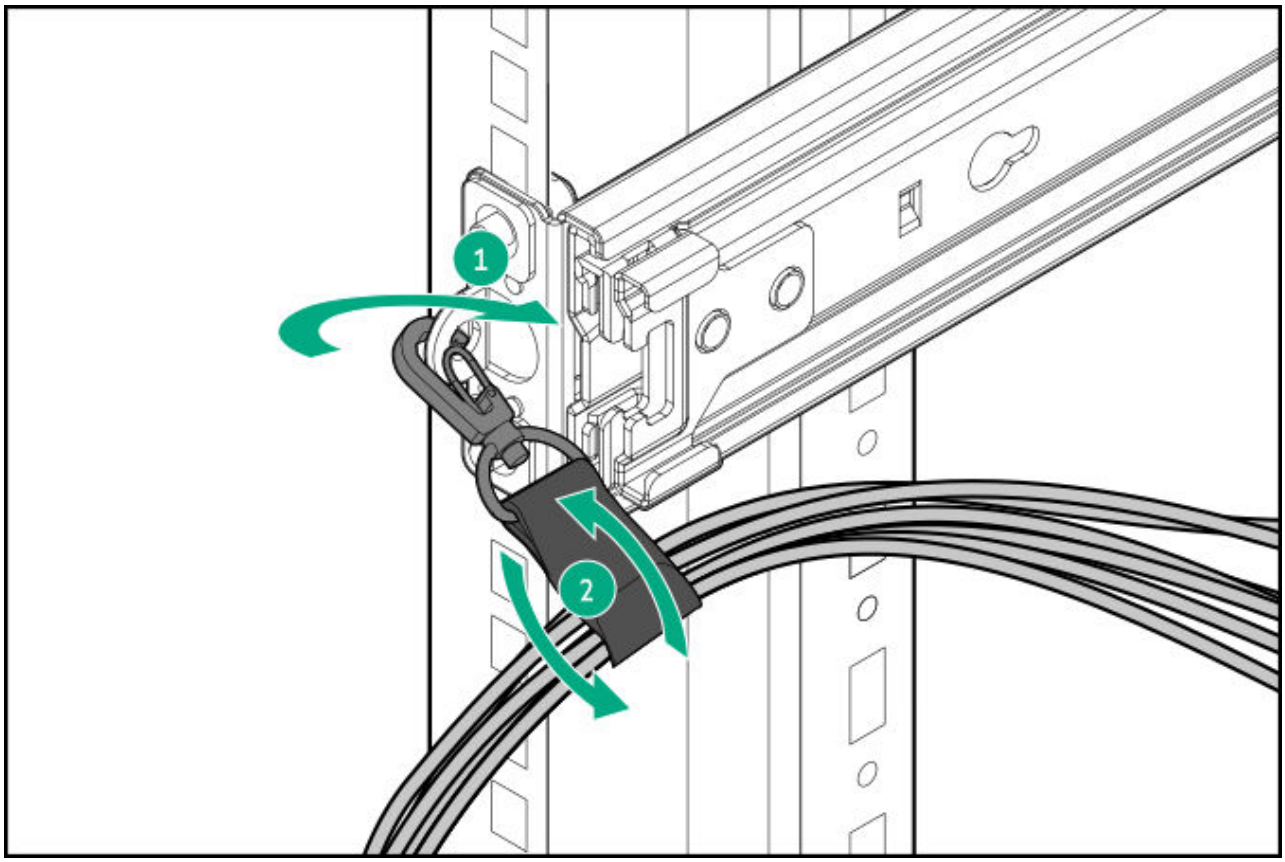

Installing the cable management arm

Prerequisites

Before you perform this procedure, review the Rack warnings and cautions.

Procedure

1. Connect and secure all peripheral cables and power cords to the rear panel.
2. (Optional) Rotate the bracket.

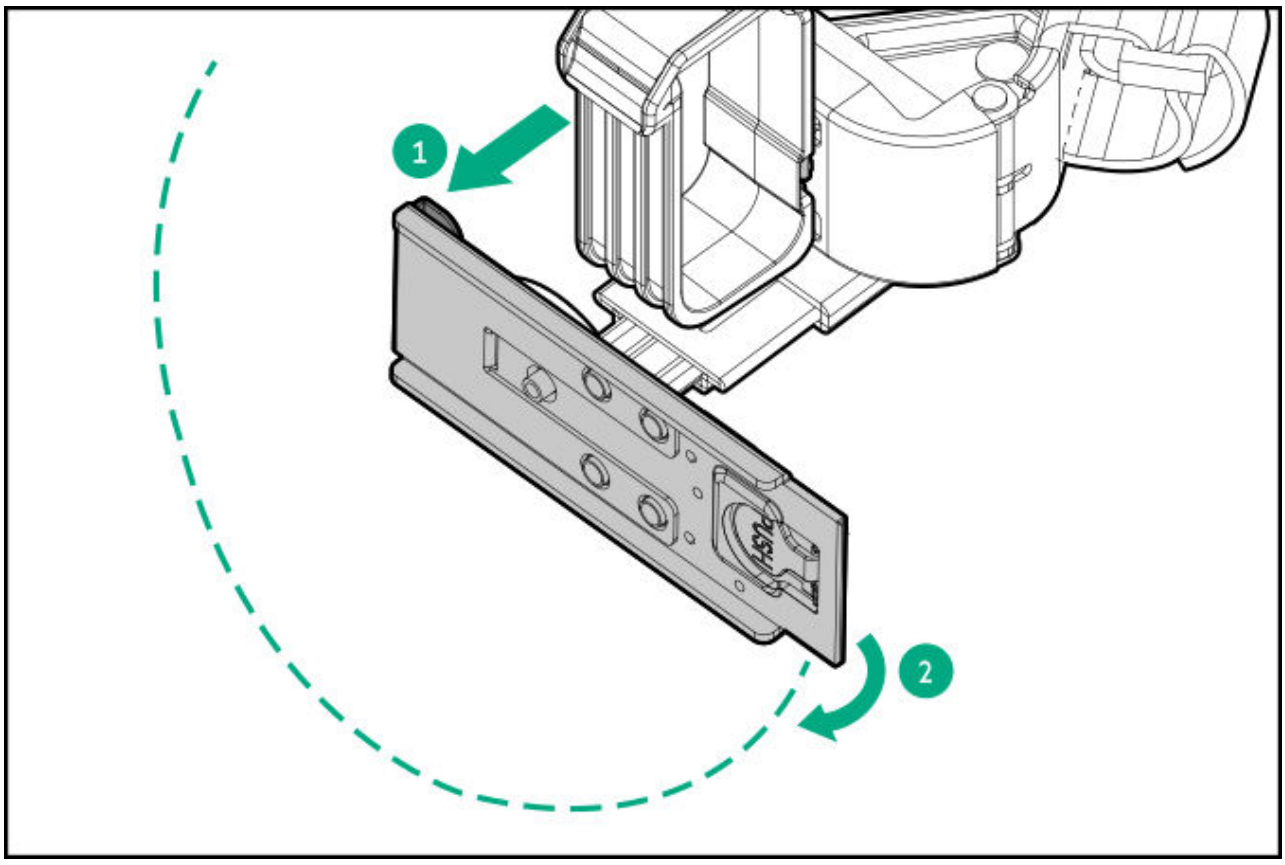

3. Install the CMA.

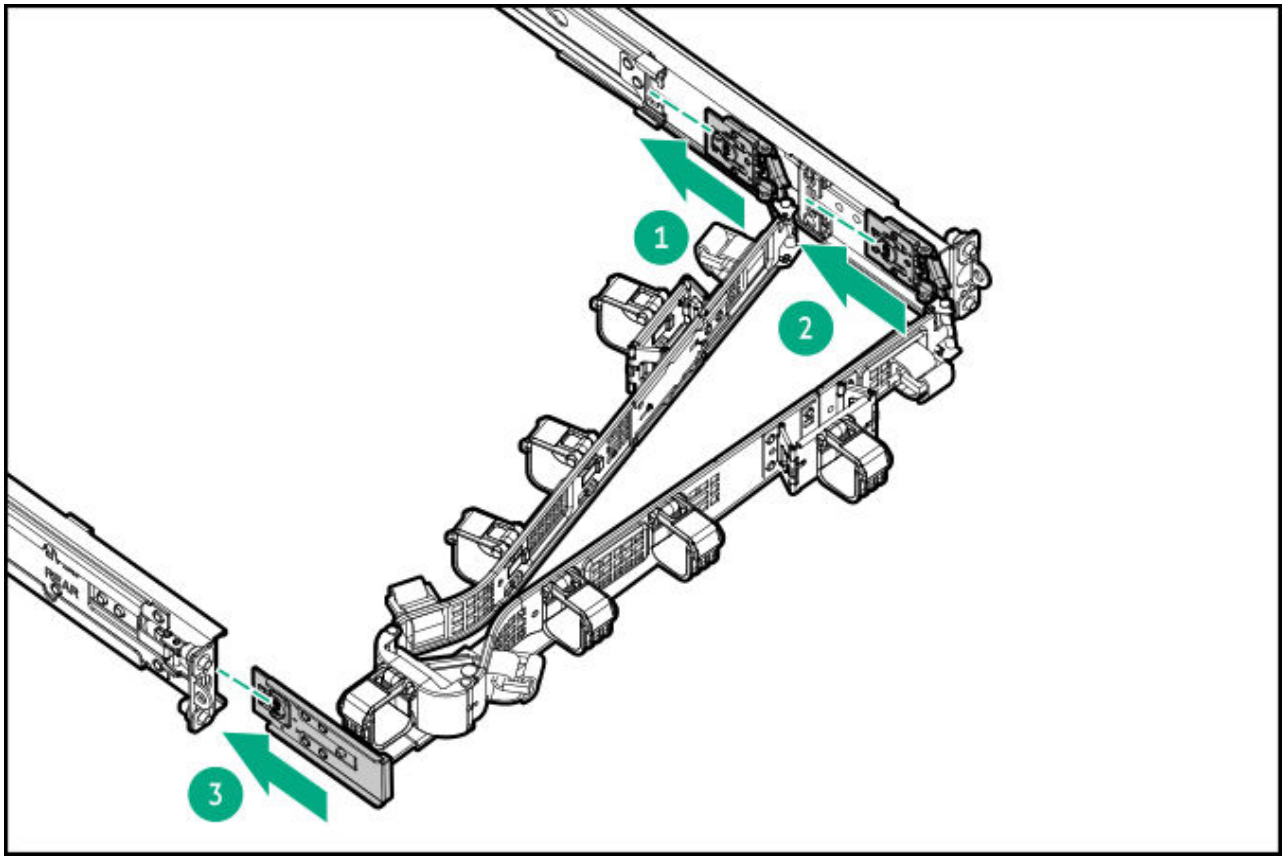

4. Open the cable clamps.

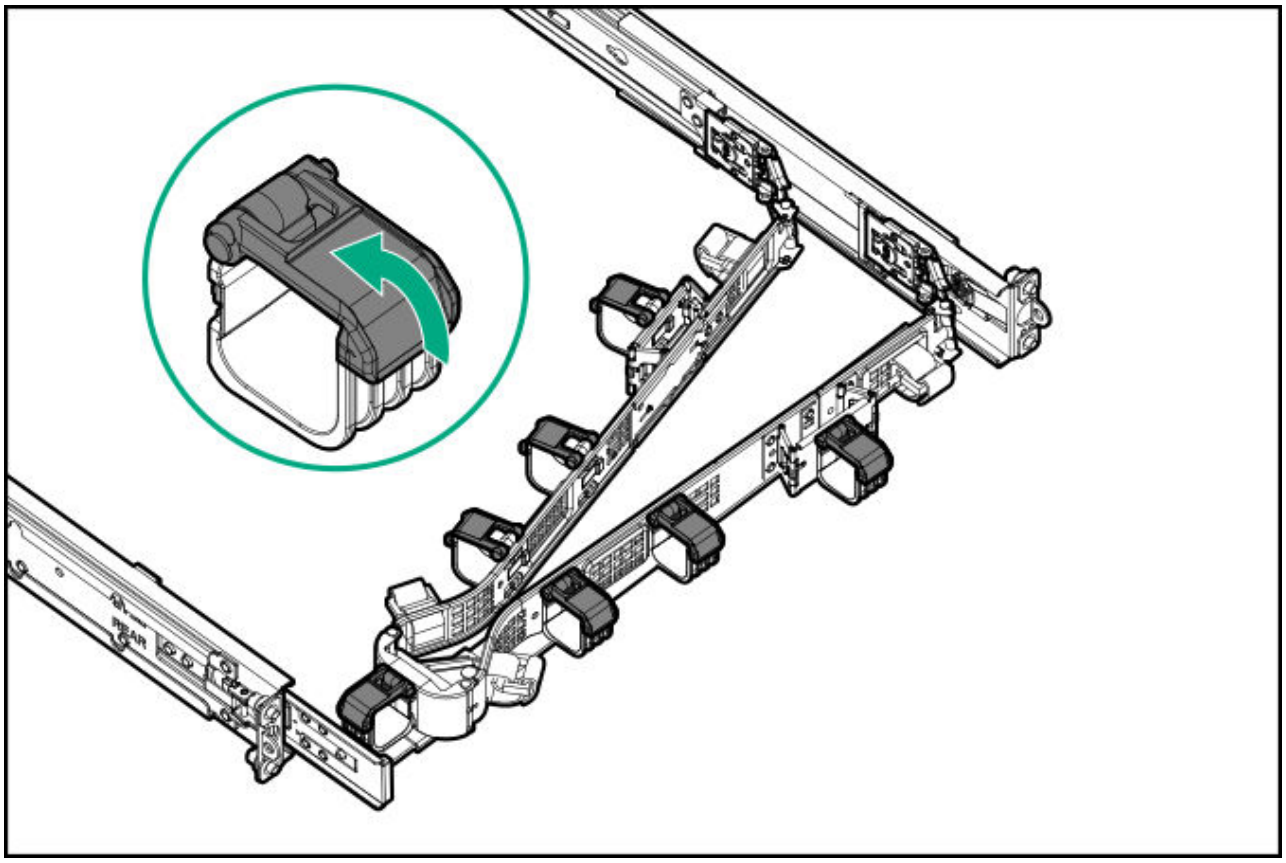

5. **CAUTION:** Employ industry best practices in managing peripheral cables and power cords secured in the CMA. These are some of the more important points:

   - Leave enough cable slack between the rear panel and the CMA to allow the full extension of the CMA when the server is extended out of the rack.
   - However, there should be no excess cable slack inside the CMA; this might cause cable binding and could lead to cable damage.
   - Make sure that the cables and power cords do not extend above the top or below the bottom of the server to which they are attached. Otherwise, the cables might snag on other equipment installed in the rack when the server is extended from or returned to the rack.

Route the peripheral cables and power cords through the cable clamps and/or straps.

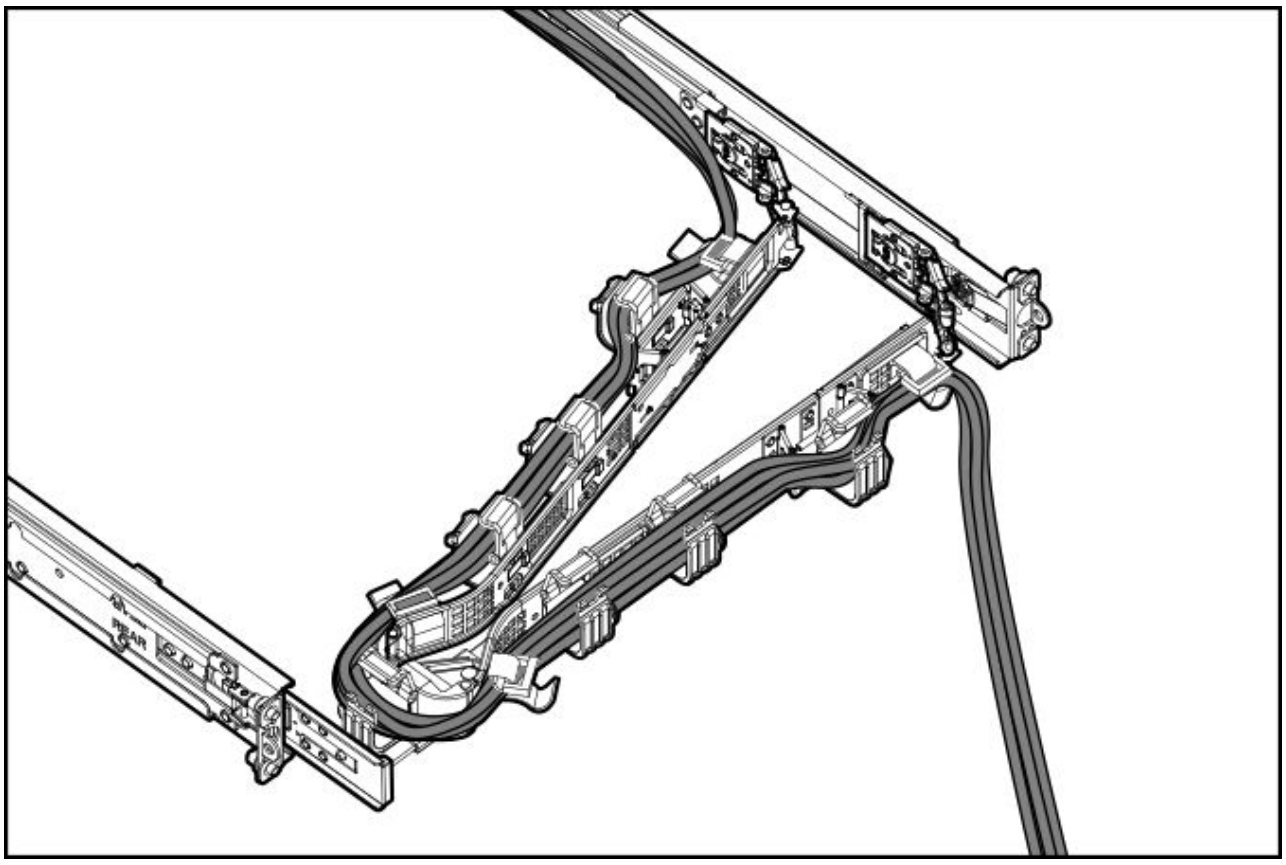

6. Close the cable clamps.

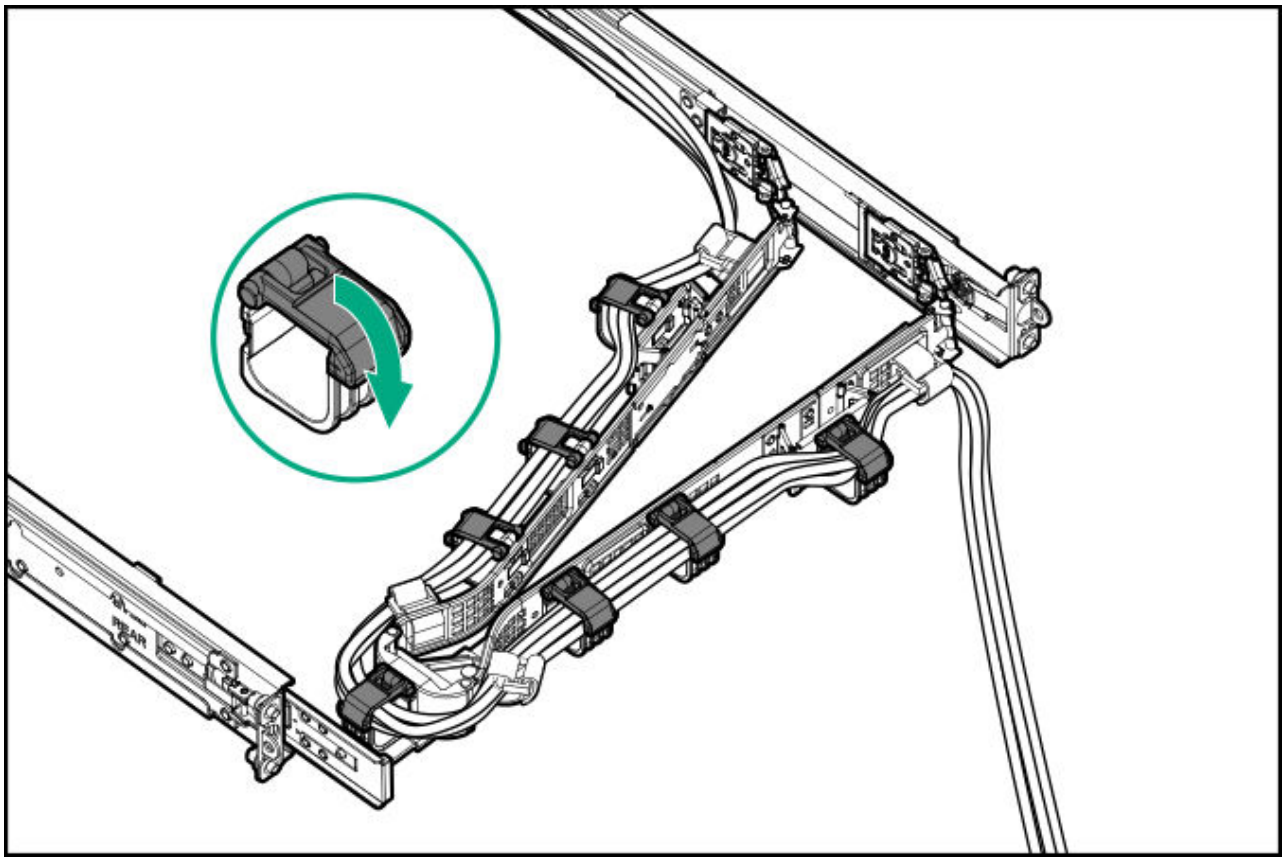

Power supply options

Subtopics

Installing a redundant hot-plug power supply

Installing a redundant hot-plug power supply

About this task

CAUTION:

All power supplies installed in the server must have the same output power capacity. Verify that all power supplies have the same part number and label color. The system becomes unstable and might shut down if it detects different power supplies.

CAUTION:

To prevent improper cooling and thermal damage, do not operate the server unless all bays are populated with either a component or a blank.

Procedure

1. Release the cable management arm to access the rear panel
2. Remove the blank.

WARNING:

To reduce the risk of personal injury from hot surfaces, allow the power supply or power supply blank to cool before touching it.

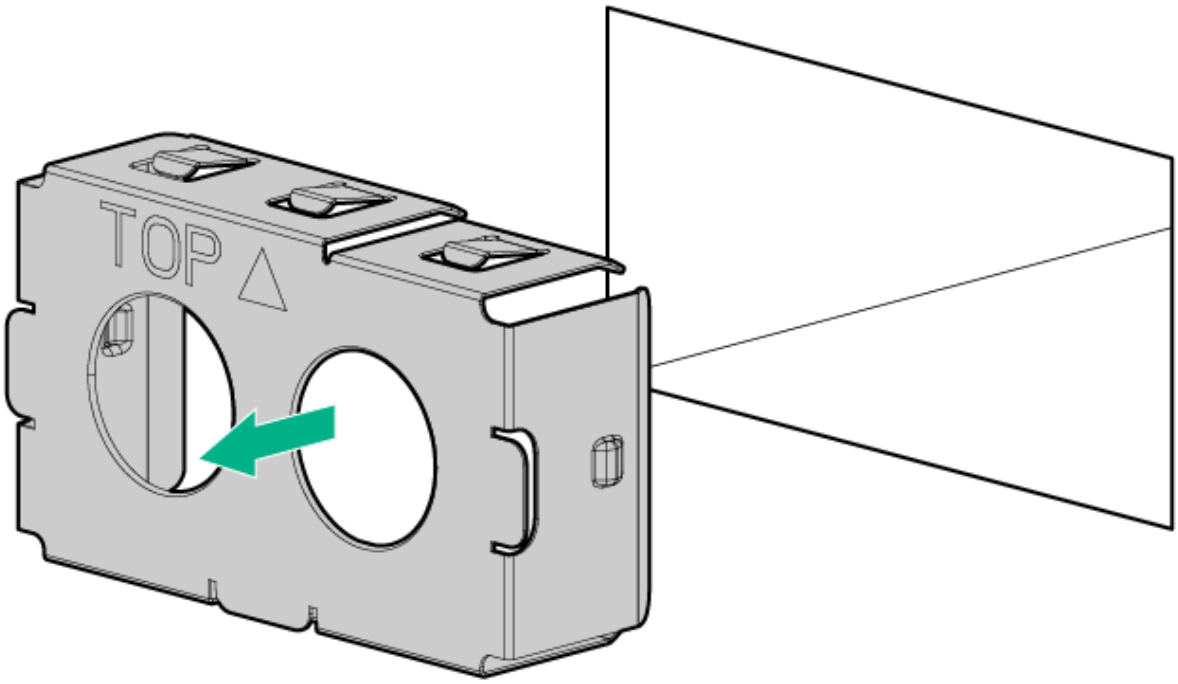

3. Insert the power supply into the power supply bay until it clicks into place.

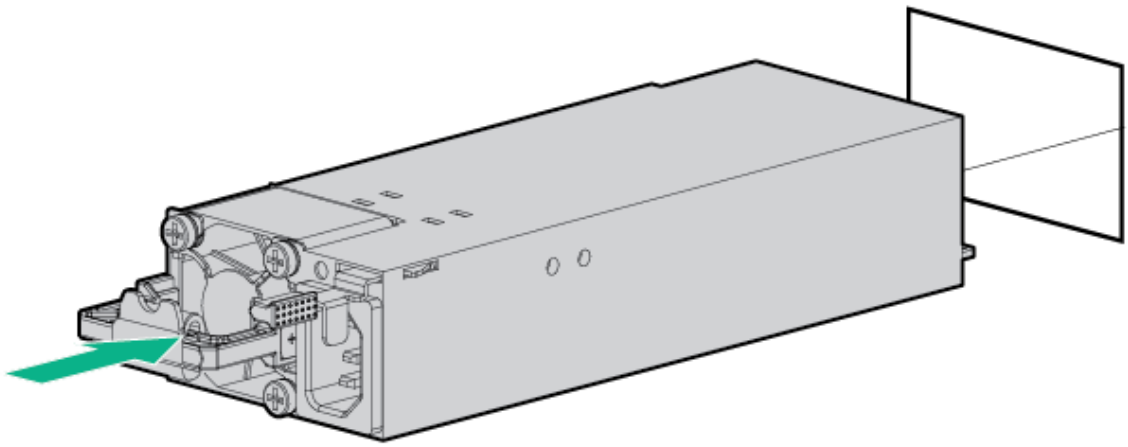

4. Connect the power cord to the power supply.
5. Secure the power cord in the strain relief strap attached to the power supply handle:

a. Unwrap the strain relief strap from the power supply handle.

> **CAUTION:** Avoid tight bend radii to prevent damaging the internal wires of a power cord or a server cable. Never bend power cords and server cables tight enough to cause a crease in the sheathing.

b. Secure the power cord with the strain relief strap.

   Roll the extra length of the strap around the power supply handle.

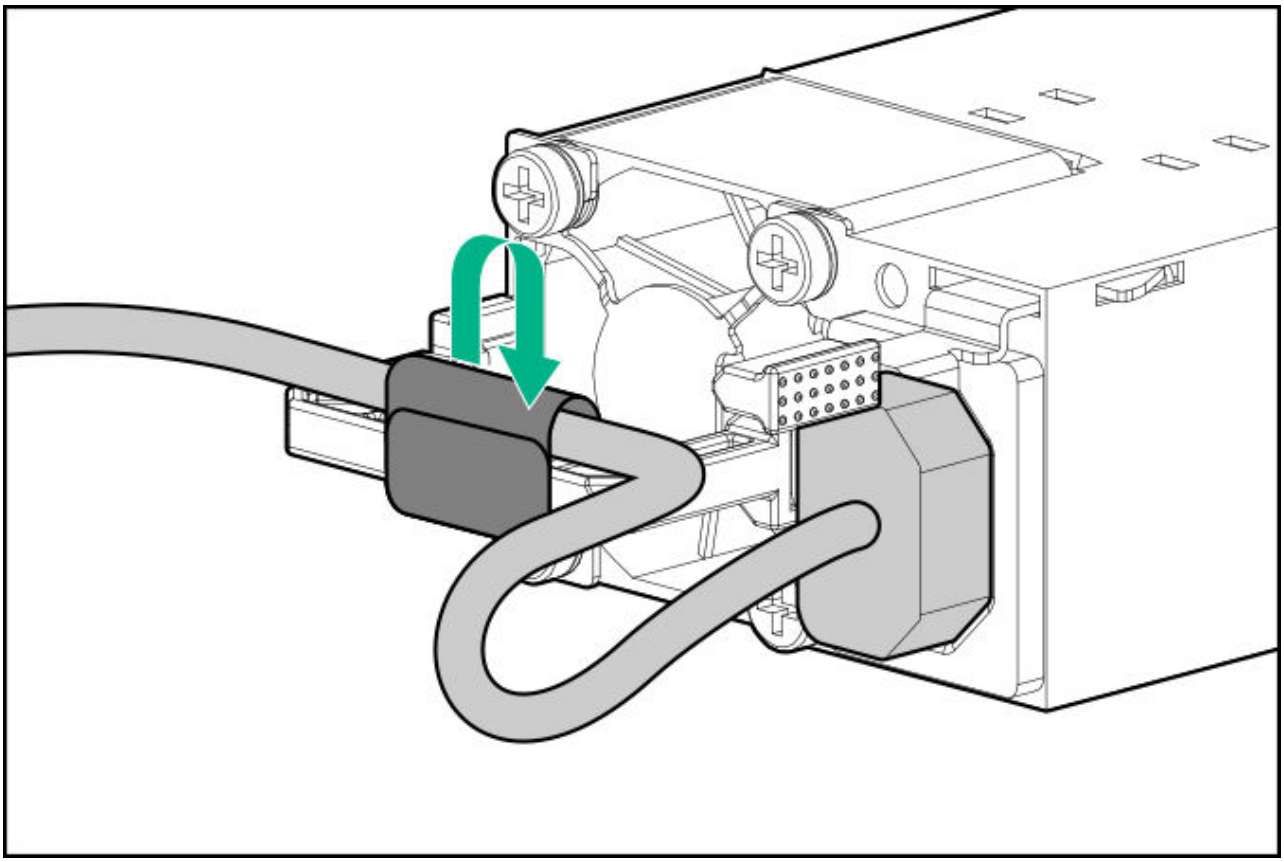

6. Connect the power cord to the power source.
7. Observe the power supply LED.

Fan options

CAUTION: To avoid damage to the equipment, do not operate the server for extended periods of time if the server does not have the optimal number of fans installed. Although the server might boot, Hewlett Packard Enterprise does not recommend operating the server without the required fans installed and operating.

To provide sufficient airflow to the system, the server is populated by seven fans. The fans are high-performance, dual-rotor fans. A mixed-fan configuration is not supported.

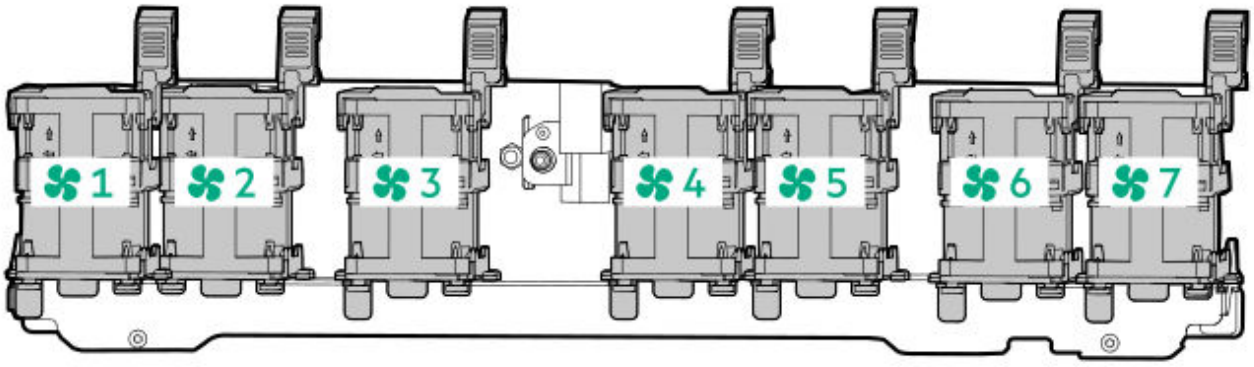

The server supports variable fan speeds. The fans operate at minimum speed until a temperature change requires an increase in fan speed to cool the server. The server shuts down during the following temperature-related scenarios:

- At POST and in the OS, iLO performs an orderly shutdown if a cautionary temperature level is detected. If the server hardware detects a critical temperature level before an orderly shutdown occurs, the server performs an immediate shutdown.
- When the Thermal Shutdown feature is disabled in the BIOS/Platform Configuration (RBSU), iLO does not perform an orderly shutdown when a cautionary temperature level is detected. Disabling this feature does not disable the server hardware from performing an immediate shutdown when a critical temperature level is detected.

  CAUTION: A thermal event can damage server components when the Thermal Shutdown feature is disabled in the BIOS/Platform Configuration (RBSU).

Subtopics

Fan mode behavior
Installing a hot-plug fan

Fan mode behavior

The seven fan setup provides redundant fan support. In redundant fan mode, if a fan rotor failure occurs:

- The system switches to nonredundant fan mode. The system continues to operate in this mode.
- The system Health LED flashes amber.

If a second fan rotor failure or a missing fan occurs, the operating system gracefully shuts down.

Installing a hot-plug fan

About this task

CAUTION: Do not operate the server for long periods with the access panel open or removed. Operating the server in this manner results in improper airflow and improper cooling that can lead to thermal damage.

IMPORTANT: For optimum cooling, install fans in all primary fan locations.

Procedure

1. Extend the server from the rack.
2. Remove the access panel.
3. Install the fan.

IMPORTANT: When a hot-plug fan is removed, the other fans in the server will increase speed to compensate.

CAUTION: To avoid server shutdown, a fan must be replaced within 60 seconds of being removed.

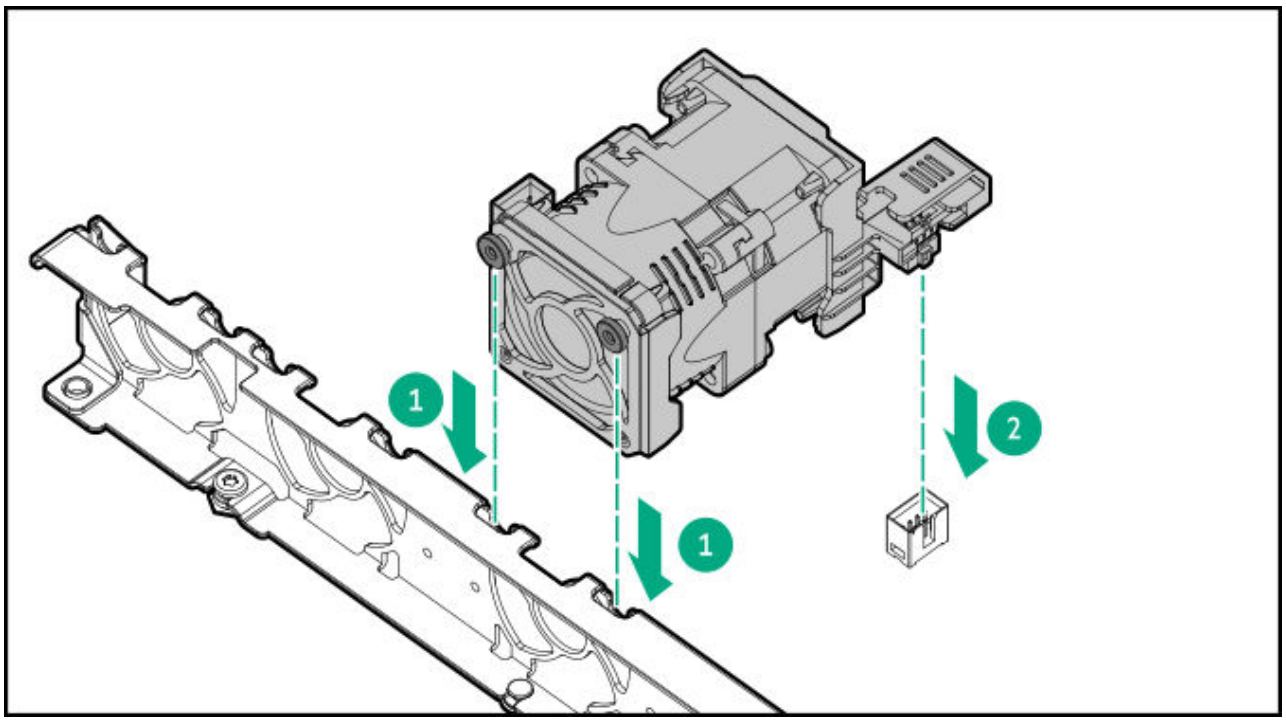

Memory options

> **IMPORTANT:** This server does not support mixing LRDIMMs and RDIMMs. Attempting to mix any combination of these DIMMs can cause the server to halt during BIOS initialization. All memory installed in the server must be of the same type.

Subtopics

DIMM population information
DIMM-processor compatibility
Installing a DIMM

DIMM population information

For specific DIMM population information, see the DIMM population guidelines on the Hewlett Packard Enterprise website (**https://www.hpe.com/docs/server-memory**).

DIMM-processor compatibility

The installed processor determines the type of DIMM that is supported in the server:

Ampere Altra and Altra Max processors support DDR4-3200 DIMMS.

Mixing DIMM types, capacities, and configurations are not supported. Only install supported DDR4-3200 DIMMs for this server.

Installing a DIMM

Prerequisites

Before installing this option, be sure you have the following:

The components included with the hardware option kit

For more information on specific options, see the server QuickSpecs on the **Hewlett Packard Enterprise website**.

About this task

The server supports up to 16 DIMMs.

Procedure

1. Power down the server.
2. Remove all power:
    a. Disconnect each power cord from the power source.
    b. Disconnect each power cord from the server.
3. Do one of the following:
    a. Extend the server from the rack.
    b. Remove the server from the rack.
4. Remove the access panel.
5. Open the DIMM slot latches.
6. Install the DIMM.

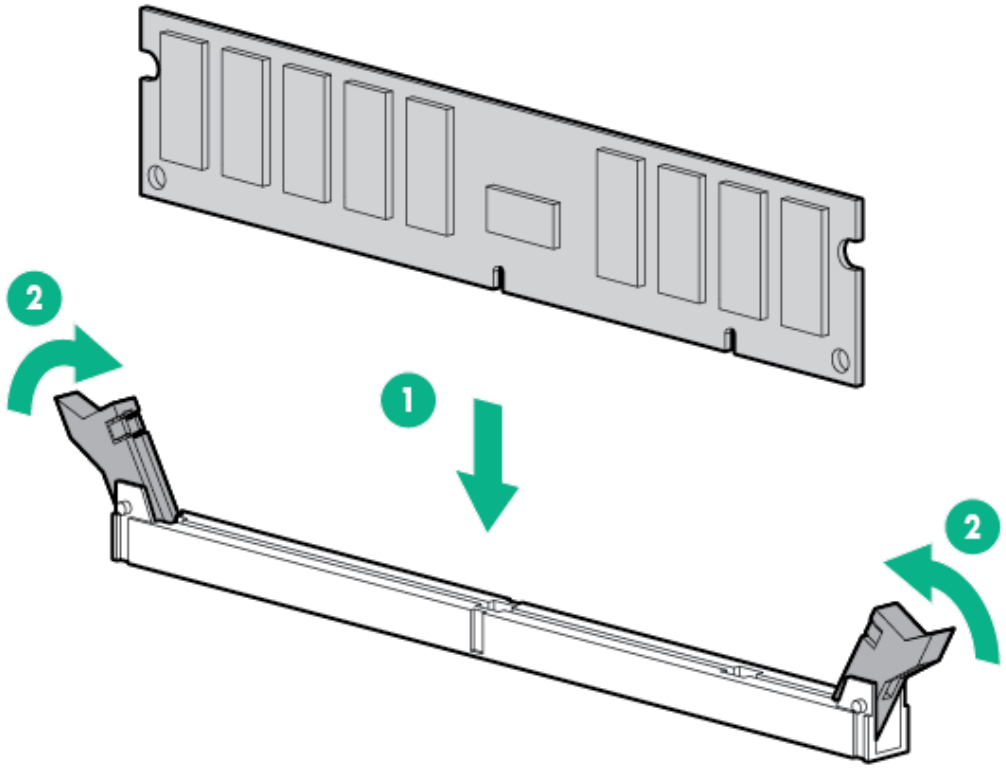

7. Install the access panel.
8. Install the server in the rack.
9. Connect each power cord to the server.
10. Connect each power cord to the power source.
11. Power up the server.

Results

Use the BIOS/Platform Configuration (RBSU) in the UEFI System Utilities to configure the memory mode.

Drive options

This server supports NVMe drives. For information on drive support, see the product QuickSpecs.

When adding hard drives to the server, observe the following guidelines:

- The system automatically sets all device numbers.

- For drive numbering, see Drive bay numbering.
- If using only one hard drive, install it in the bay with the lowest device number.
- To provide the greatest storage space efficiency, group identical capacity drives into the same drive array.
- The NVMe SSD is a PCIe bus device. Do not remove NVMe drives without allowing the device to cease activity. Removing the drive while active can cause data loss.

Subtopics

Installing a hot-plug NVMe drive

Installing a hot-plug NVMe drive

About this task

CAUTION: To prevent improper cooling and thermal damage, do not operate the server unless all drive and device bays are populated with either a component or a blank.

Procedure

1. Remove the drive blank:

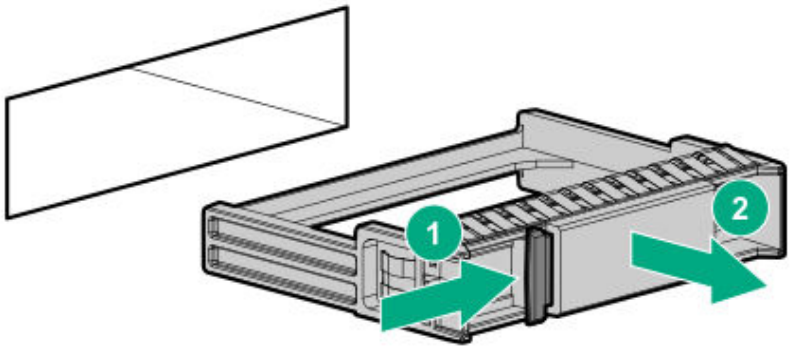

2. Prepare the drive.

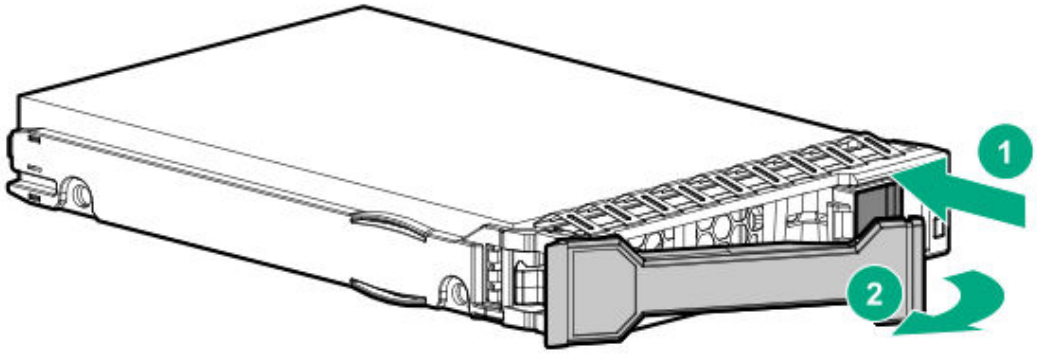

3. Install the drive.

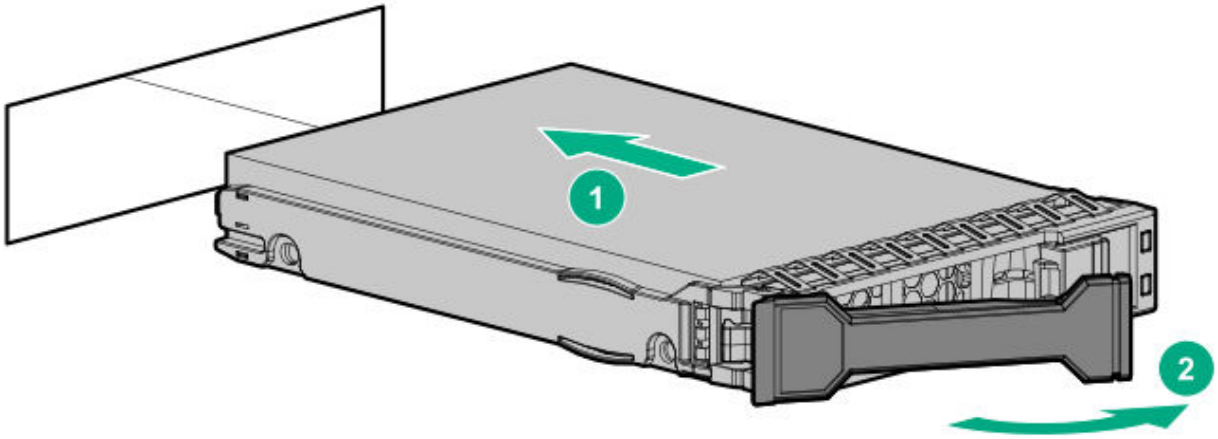

4. Determine the status of the drive from the drive LED definitions.

Riser options

- Slot 1 PCIe4 x16 (16, 8, 4, 1) riser supports a full-height, full-length expansion card.
- Slot 2 PCIe4 x16 (16, 8, 4, 1) riser supports a full-height, half-length expansion card.

Subtopics

Installing an expansion card
Installing a riser cage

Installing an expansion card

About this task

WARNING: To reduce the risk of personal injury, electric shock, or damage to the equipment, remove power from the server by removing the power cord. The front panel Power On/Standby button does not shut off system power. Portions of the power supply and some internal circuitry remain active until AC power is removed.

Procedure

1. Power down the server.
2. Remove all power:
   a. Disconnect each power cord from the power source.
   b. Disconnect each power cord from the server.
3. Do one of the following:
   a. Extend the server from the rack.
   b. Remove the server from the rack.
4. Remove the access panel.
5. Remove the riser cage.

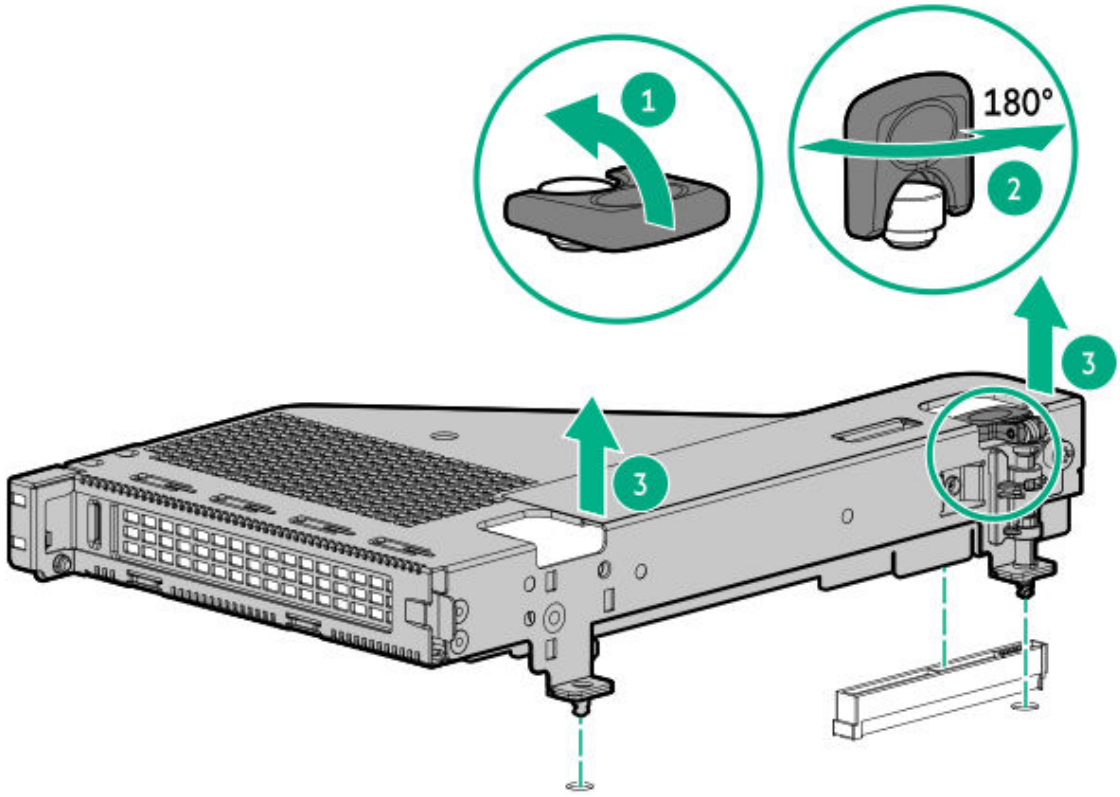

6. Install the expansion card.

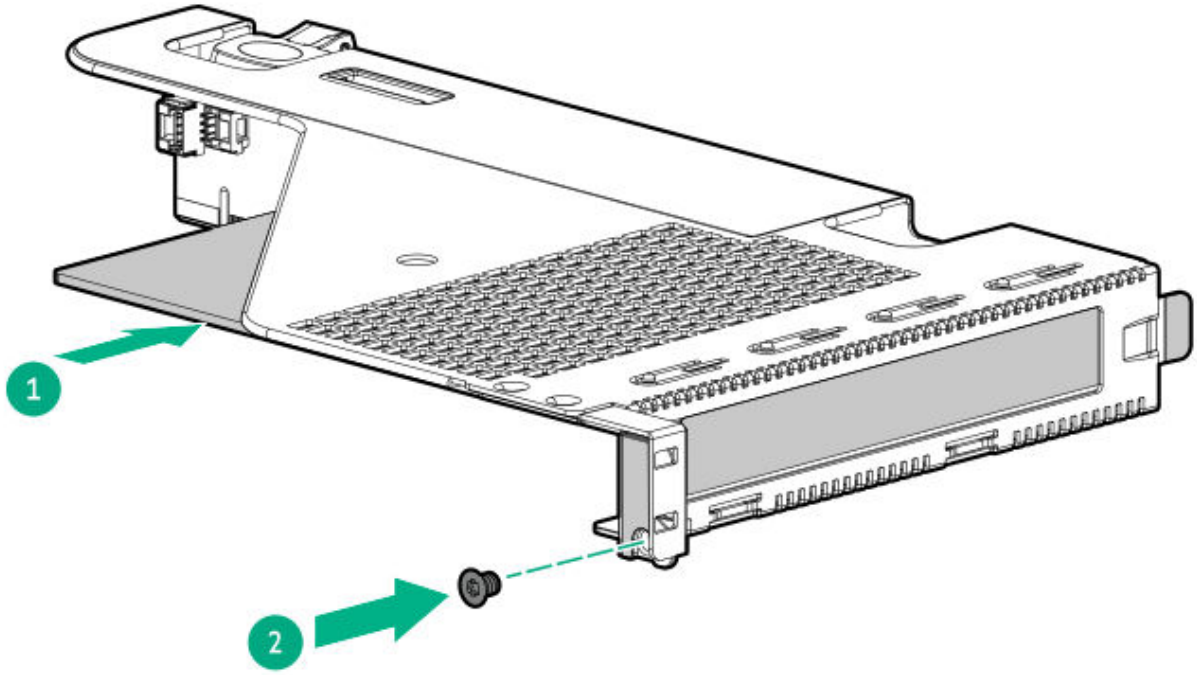

7. Install the riser cage.

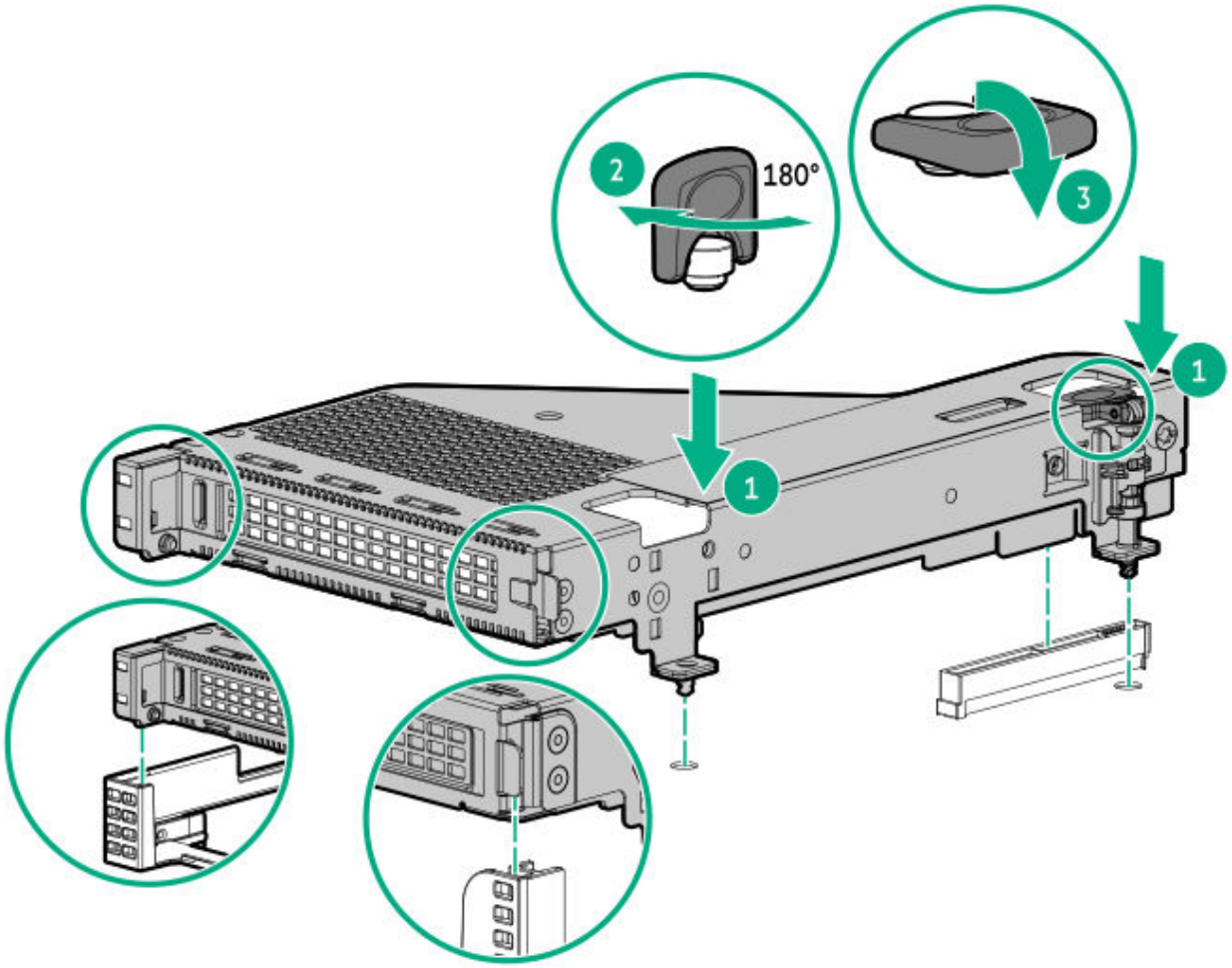

Results

The installation is complete.

Installing a riser cage

About this task

WARNING: To reduce the risk of personal injury, electric shock, or damage to the equipment, remove power from the server by removing the power cord. The front panel Power On/Standby button does not shut off system power. Portions of the power supply and some internal circuitry remain active until AC power is removed.

Procedure

1. Power down the server.
2. Remove all power:
   a. Disconnect each power cord from the power source.
   b. Disconnect each power cord from the server.
3. Do one of the following:
   a. Extend the server from the rack.
   b. Remove the server from the rack.
4. Remove the access panel.
5. Install the riser cage.

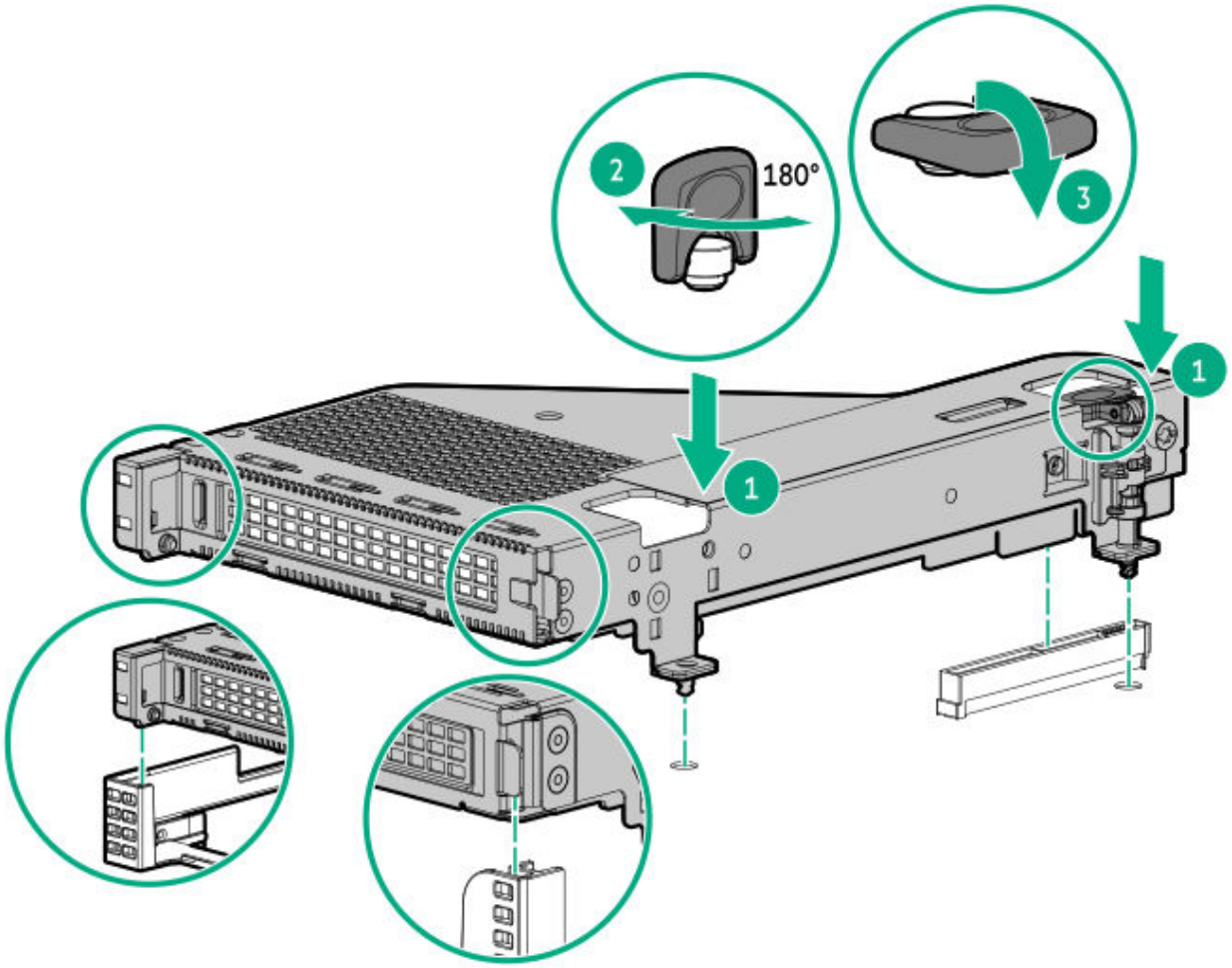

Results

The installation is complete.

Installing the M.2 pass-through module

Procedure

1. Power down the server.
2. Remove all power:
   a. Disconnect each power cord from the power source.
   b. Disconnect each power cord from the server.
3. Do one of the following:
   - Extend the server from the rack.
   - Remove the server from the rack.
4. Remove the access panel.
5. Remove the module.

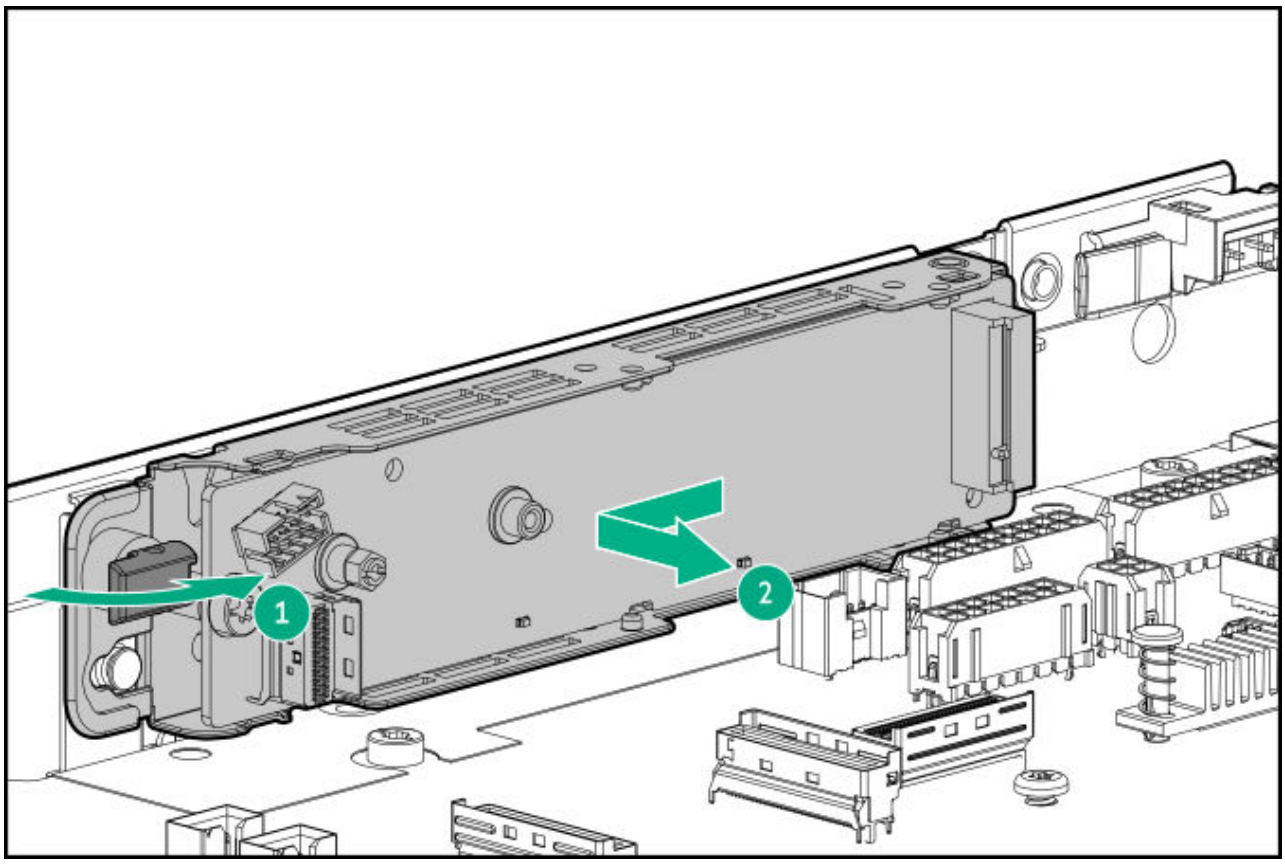

6. Install the drive.

   You can install an M.2 22110 drive without modifying the module.

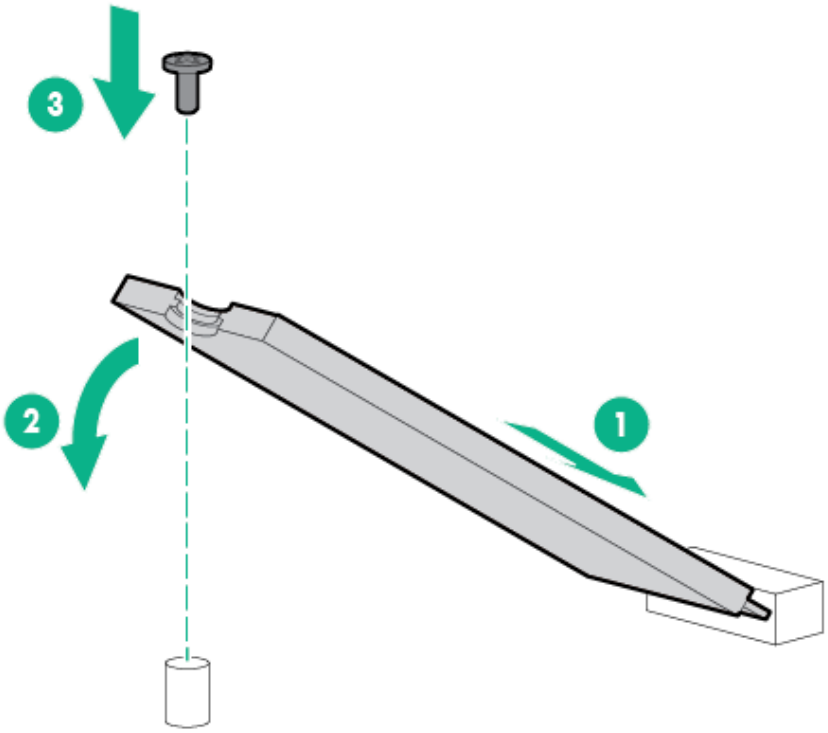

To install an M.2 2280 drive:

a. Remove the mounting and hex screws.

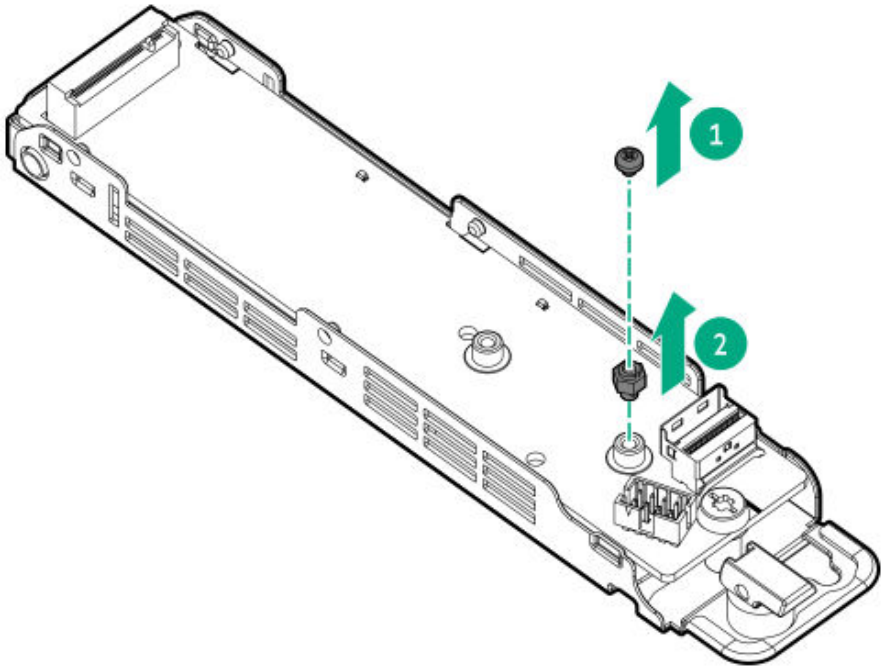

b. Install the hex screw on the 2280 standoff.

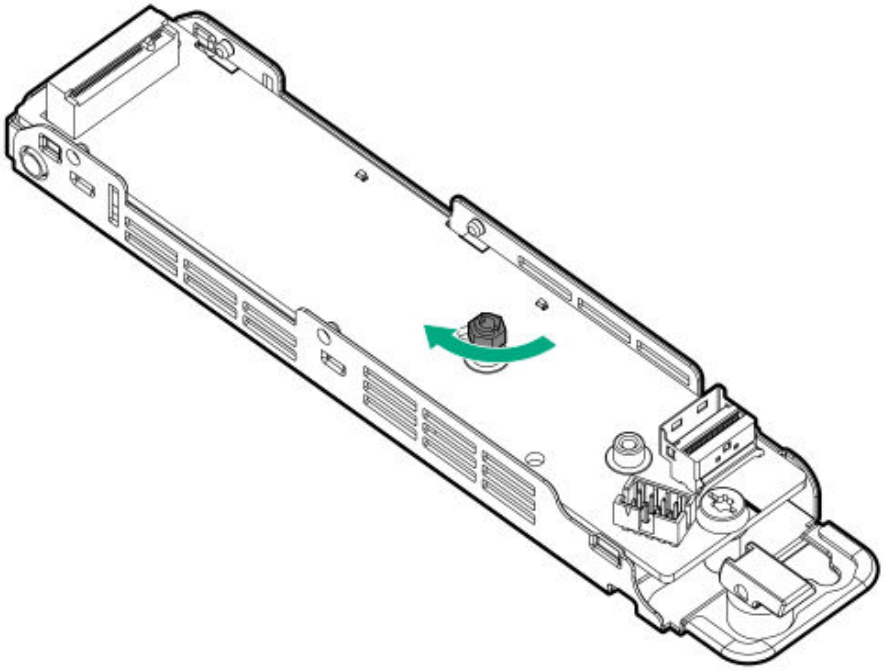

c. Install the M.2 2280 drive.

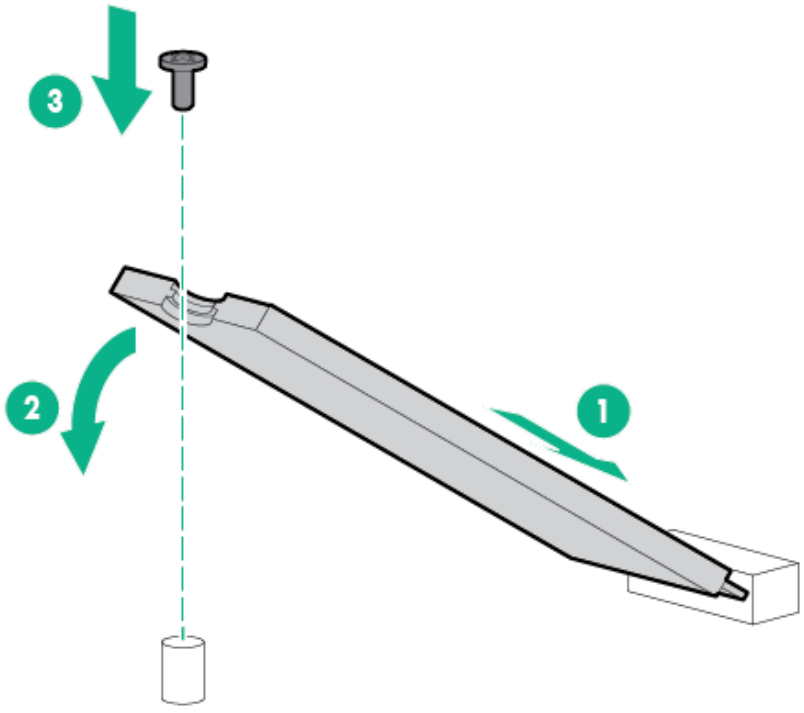

7. Install the M.2 pass-through module.

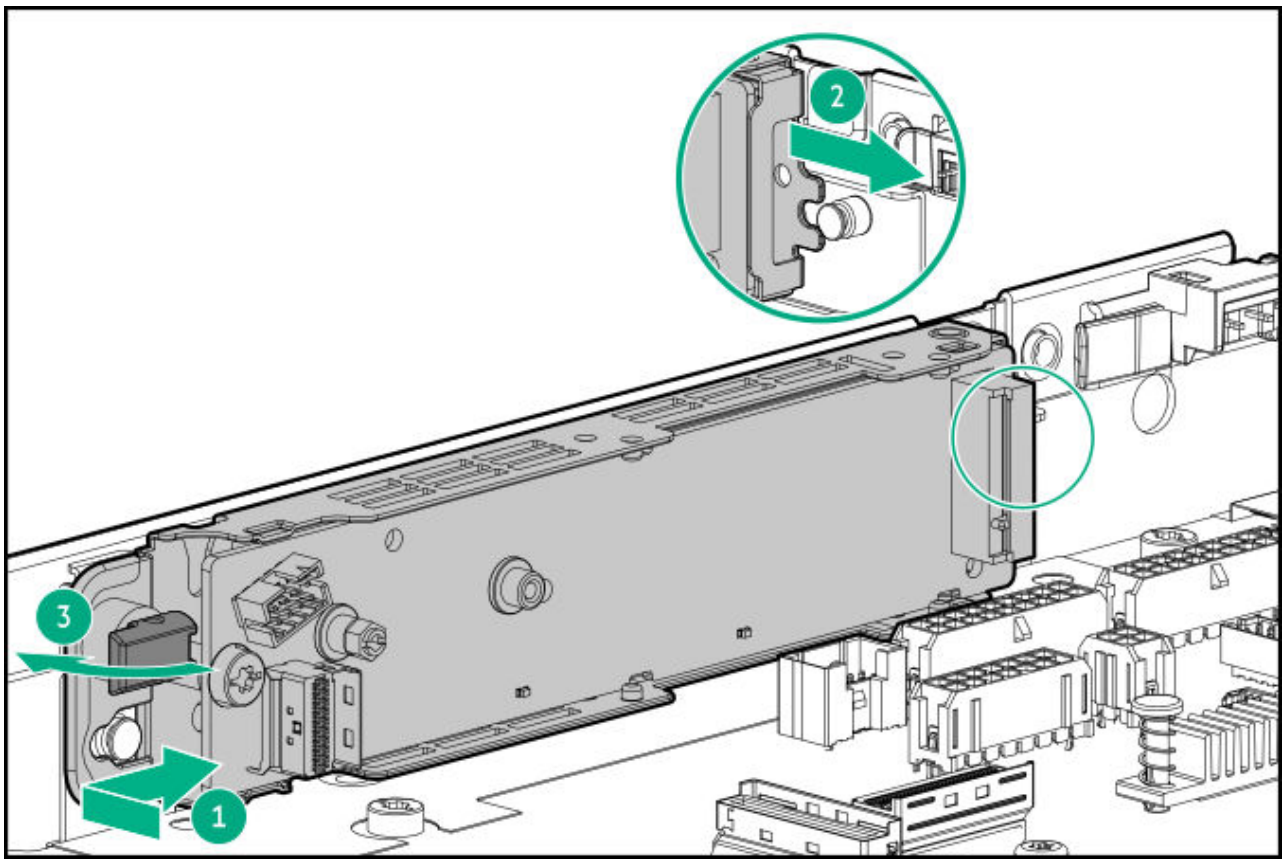

8. Cable the module.

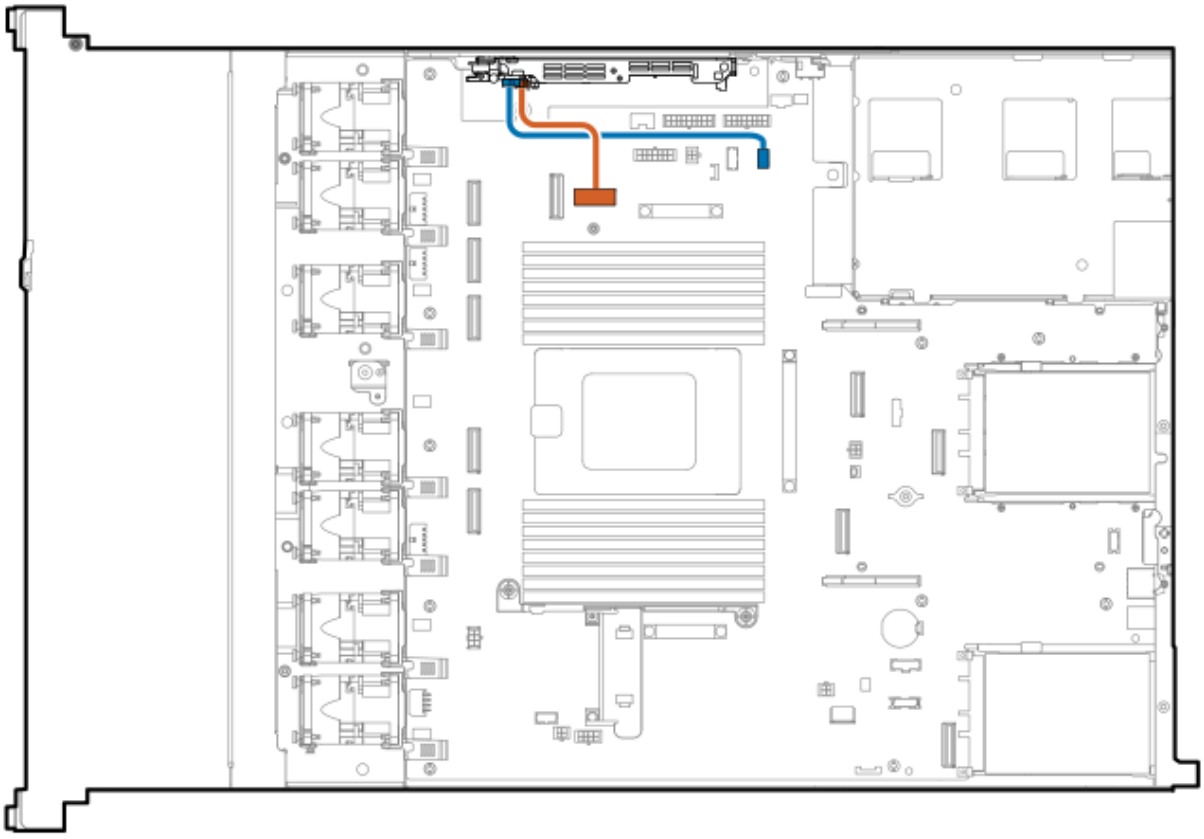

Results

The installation is complete.

Installing an OCP 3.0 adapter card

Procedure

1. Power down the server.
2. Remove all power:
   a. Disconnect each power cord from the power source.
   b. Disconnect each power cord from the server.
3. Do one of the following:
   - Extend the server from the rack.
   - Remove the server from the rack.

4. Remove the access panel.
5. Remove the riser cage.

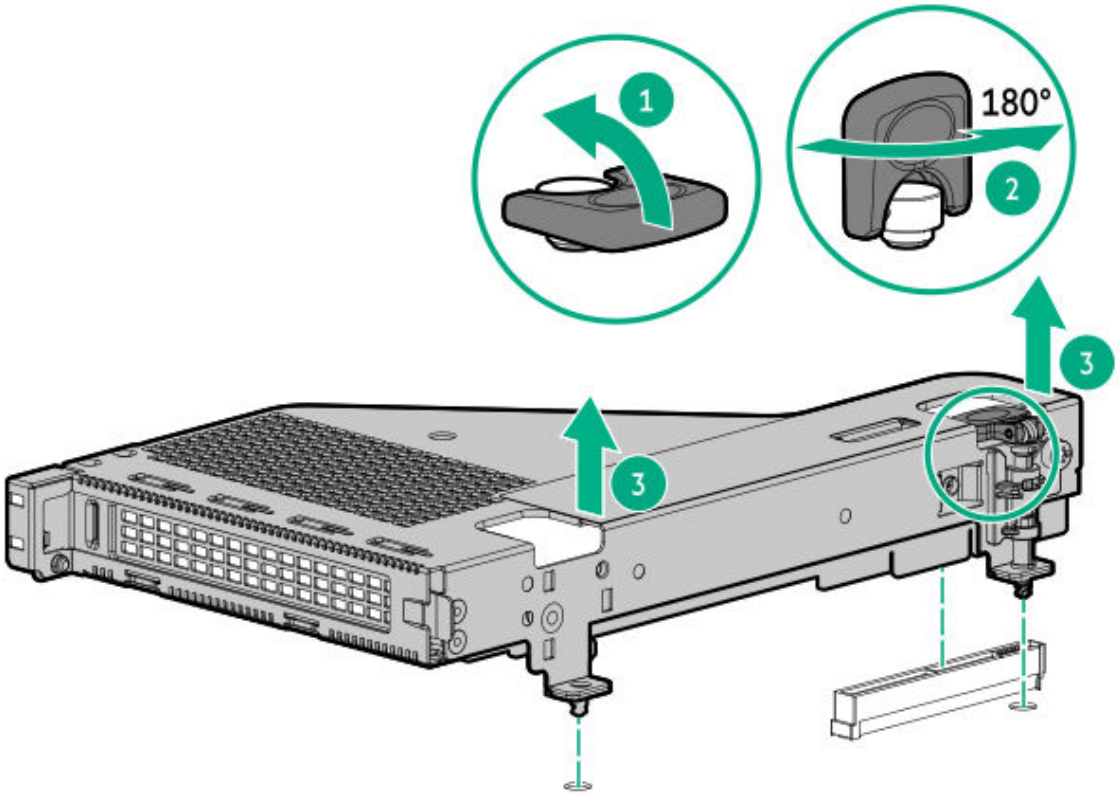

6. Remove the OCP 3.0 adapter blank.

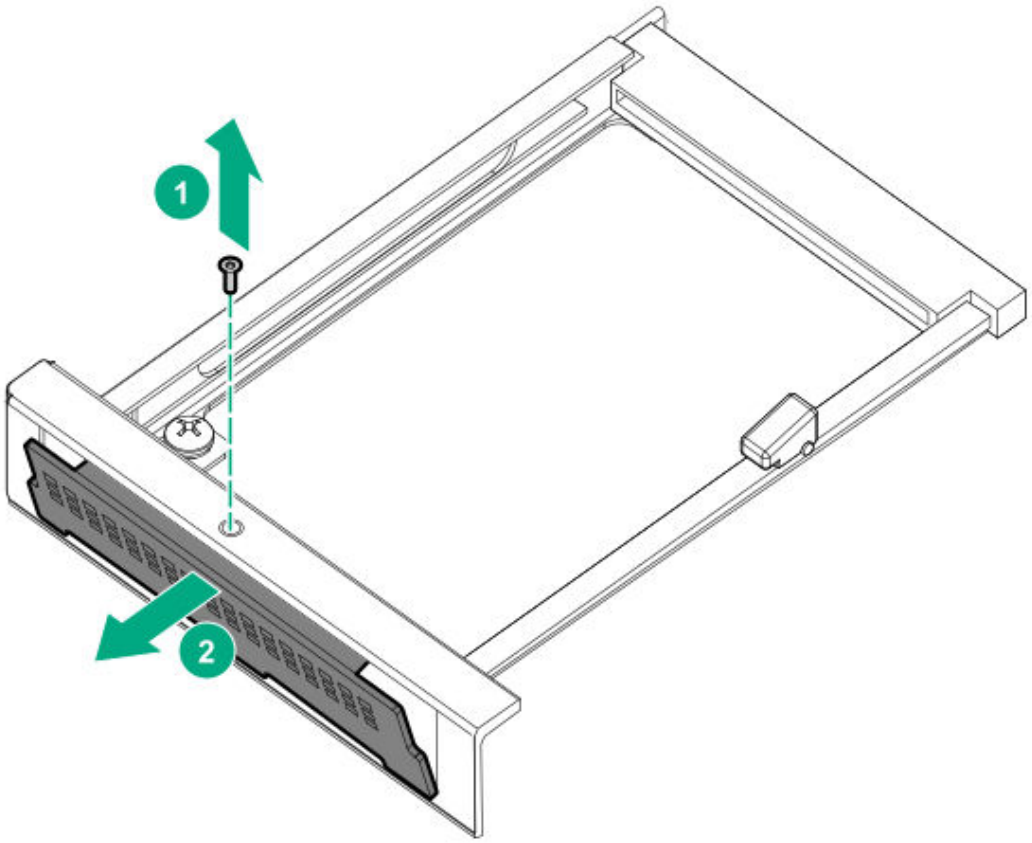

7. Install the OCP 3.0 adapter.

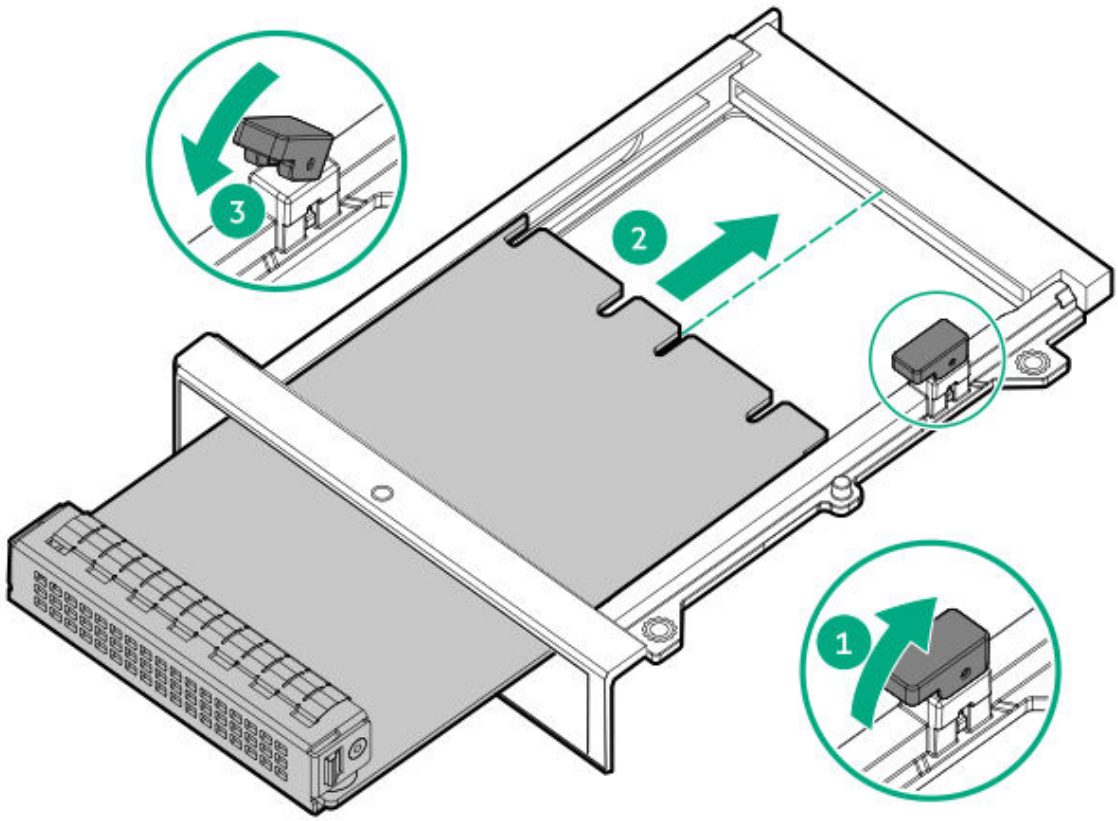

Results

The installation is complete.

Installing the chassis intrusion detection switch

Procedure

1. Power down the server.
2. Remove all power:
   a. Disconnect each power cord from the power source.
   b. Disconnect each power cord from the server.
3. Do one of the following:
   a. Extend the server from the rack.
   b. Remove the server from the rack.
4. Remove the access panel.

5. Install the switch.

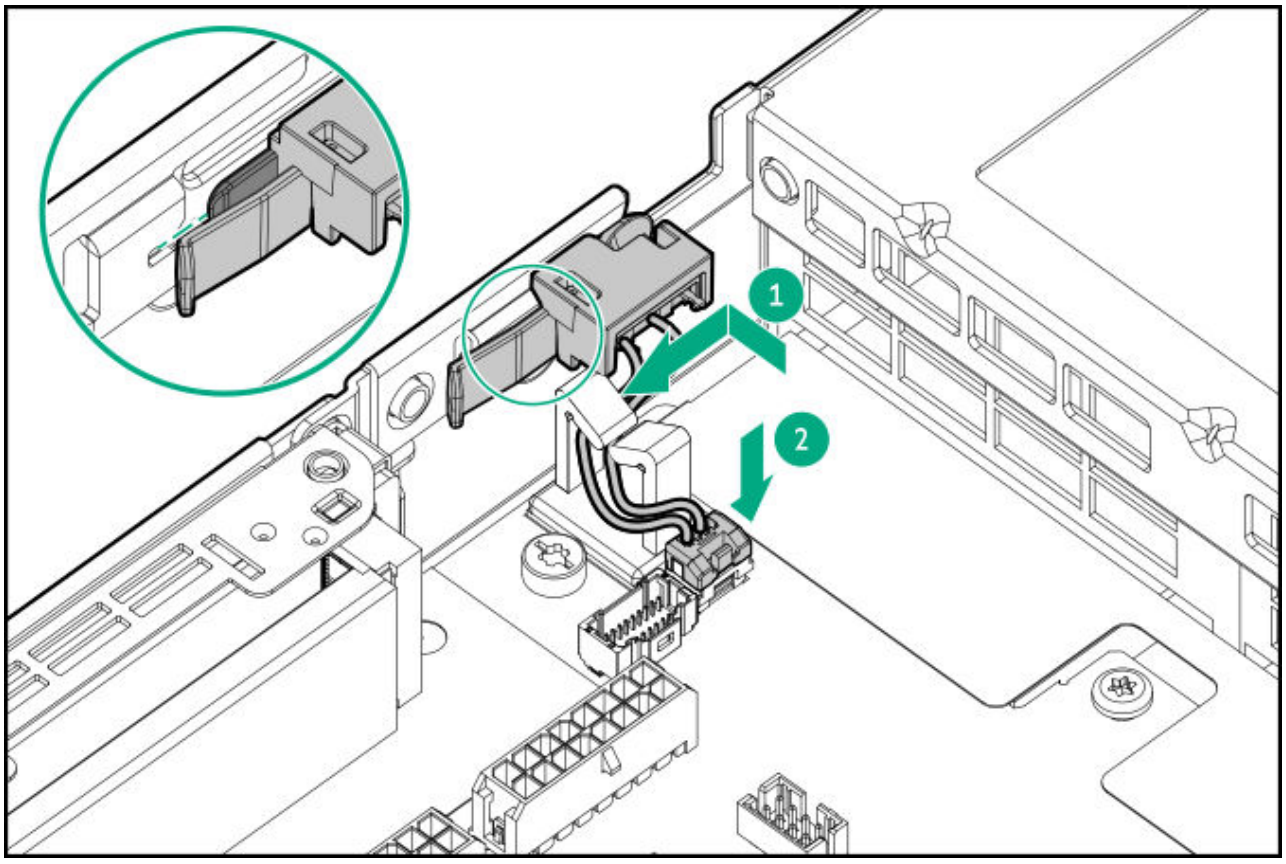

Results

The installation is complete.

Installing the serial port

Procedure

1. Power down the server.
2. Remove all power:
   a. Disconnect each power cord from the power source.
   b. Disconnect each power cord from the server.
3. Do one of the following:

- Extend the server from the rack.
- Remove the server from the rack.

4. Remove the access panel.
5. If installed, remove the secondary riser cage.
6. Remove the serial port blank.

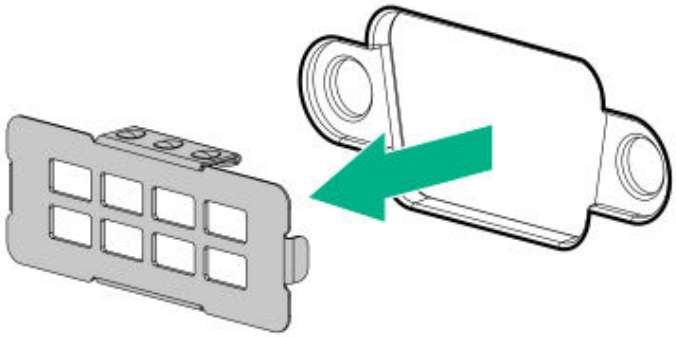

7. Install the serial port.

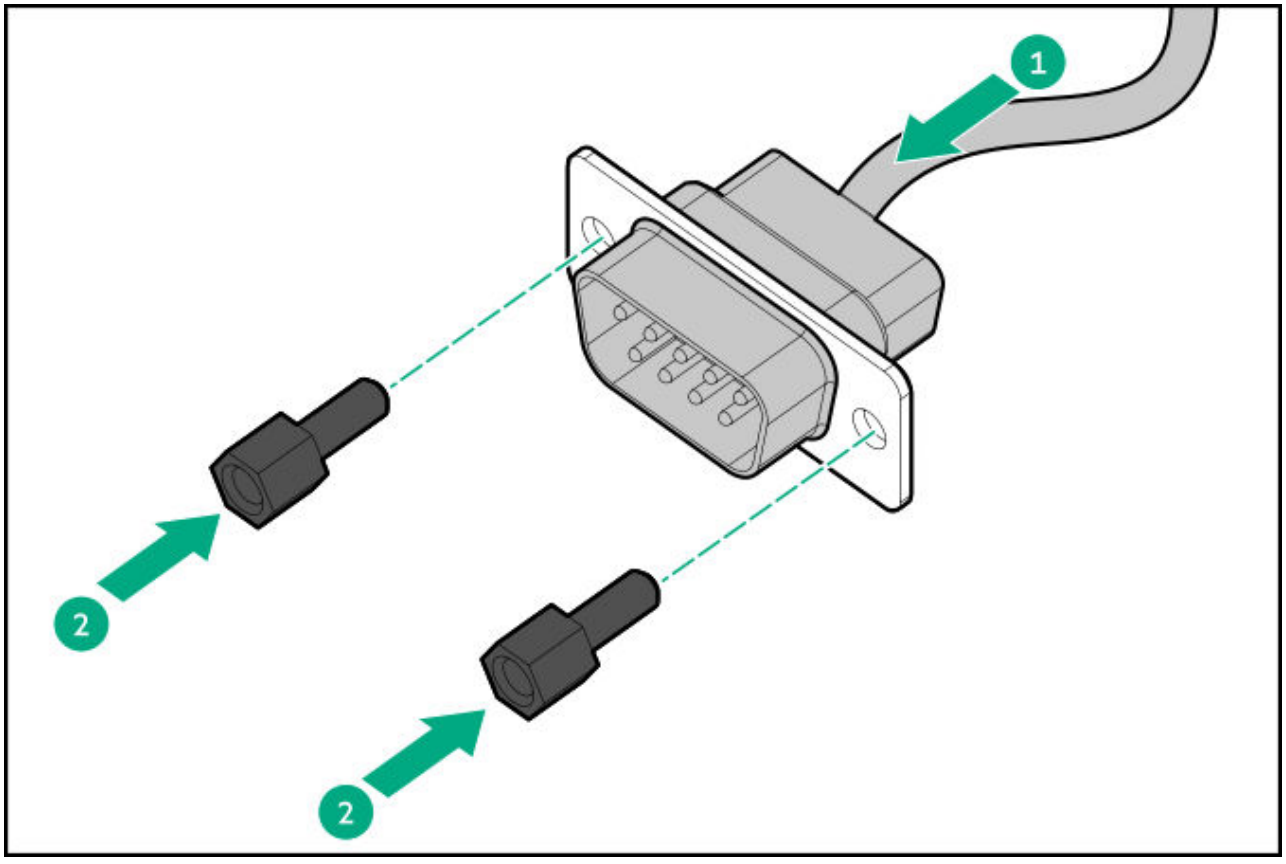

8. Connect the cable to the system board.

Results

The installation is complete.

HPE Trusted Platform Module 2.0

The HPE Trusted Platform Module 2.0 (TPM) is a hardware-based system security feature that stores artifacts used to authenticate the platform. These artifacts can include passwords, certificates, and encryption keys.

Subtopics

HPE Trusted Platform Module 2.0 guidelines

HPE Trusted Platform Module 2.0 guidelines

CAUTION:

- Always observe the TPM guidelines in this section. Failure to follow these guidelines can cause hardware damage or halt data access.
- If you do not follow procedures for modifying the server and suspending or disabling the TPM in the OS, an OS that is using TPM might lock all data access. This includes updating system or option firmware, replacing hardware such as the system board and drives, and modifying TPM OS settings.
- Changing the TPM mode after installing an OS might cause problems, including loss of data.

Hewlett Packard Enterprise SPECIAL REMINDER: Before enabling TPM functionality on this system, you must ensure that your intended use of TPM complies with relevant local laws, regulations and policies, and approvals or licenses must be obtained if applicable.

慧与特别提醒：在您启用系统中的TPM功能前，请务必确认您对TPM的使用遵守当地相关法律、法规及政策，并已事先获得所需的一切批准及许可（如适用），因您未获得相应的操作/使用许可而导致的违规问题，皆由您自行承担全部责任，与慧与无涉。

- The TPM 2.0 is embedded on the server system board.

- Use the UEFI System Utilities to configure the TPM. For more information, see the UEFI user guide:

  https://www.hpe.com/support/UEFIGen11-UG-en

- HPE is not liable for blocked data access caused by improper TPM use. For operating instructions, see the documentation for the encryption technology feature provided by the operating system.

Cabling

Subtopics

Cabling guidelines
Cabling diagrams

Cabling guidelines

Observe the following:

- Some diagrams show alphabetical callouts A, B, C, etc. These callouts correspond to labels near the connectors on the cable.
- The cable colors in the cabling diagrams used in this chapter are for illustration purposes only.
- Observe all guidelines when working with server cables.

Before connecting cables

- Note the port labels on the PCA components. Not all these components are used by all servers:
  - System board ports
  - Drive and power supply backplane ports
  - Expansion board ports (controllers, adapters, expanders, risers, and similar boards)
- Note the label near each cable connector. This label indicates the destination port for the cable connector.
- Some data cables are prebent. Do not unbend or manipulate the cables.
- To prevent mechanical damage or depositing oil that is present on your hands, and other contamination, do not touch the ends of the connectors.

When connecting cables

- Before connecting a cable to a port, lay the cable in place to verify the length of the cable.
- Use the internal cable management features to properly route and secure the cables.
- When routing cables, be sure that the cables are not in a position where they can be pinched or crimped.
- Avoid tight bend radii to prevent damaging the internal wires of a power cord or a server cable. Never bend power cords and server cables tight enough to cause a crease in the sheathing.
- Make sure that the excess length of cables is properly secured to avoid excess bends, interference issues, and airflow restriction.
- To prevent component damage and potential signal interference, make sure that all cables are in their appropriate routing position before installing a new component and before closing up the server after hardware installation/maintenance.

When disconnecting cables

- Grip the body of the cable connector. Do not pull on the cable itself because this action can damage the internal wires of the cable or the pins on the port.

- If a cable does not disconnect easily, check for any release latch that must be pressed to disconnect the cable.

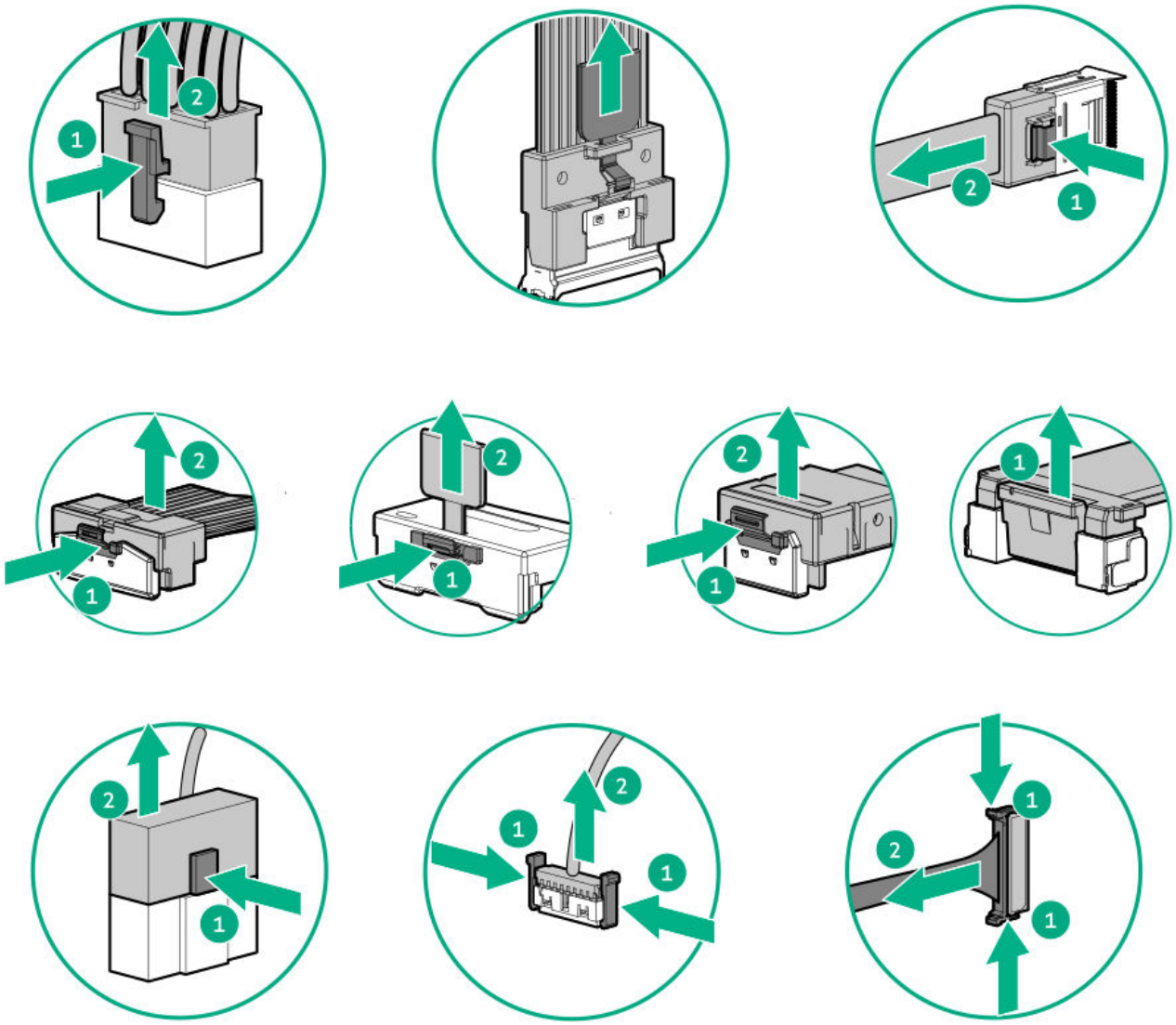

- Remove cables that are no longer being used. Retaining them inside the server can restrict airflow. If you intend to use the removed cables later, label and store them for future use.

Cabling diagrams

Observe the following:

- Before cabling components, see the cabling guidelines.
- Use the cable part number or search feature to find your diagram.

- Some storage cabling diagrams show alphabetical callouts A, B, C, etc. These callouts correspond to the physical cable connector labels.

Component cabling	Cable part number
8 SFF backplane power	P54590-001
2 SFF backplane power	P54591-001
8 SFF backplane	P54588-001 P54587-001 P54589-001 P54586-001
2 SFF backplane	P56178-001
M.2 pass-through module	P56689-001
OCP x16 bandwidth upgrade	P56686-001 P56687-001
Serial port	Serial port cabling

Subtopics

Cable routing: 8 SFF backplane to system board
Cable routing: 2 SFF backplane to system board
Cable routing: 8 SFF + 2 SFF backplane power
Cable routing: M.2 module
Cable routing: intrusion detection switch
Cable routing: front I/O
Cable routing: OCP x16 bandwidth upgrade
Cable routing: serial port

Cable routing: 8 SFF backplane to system board

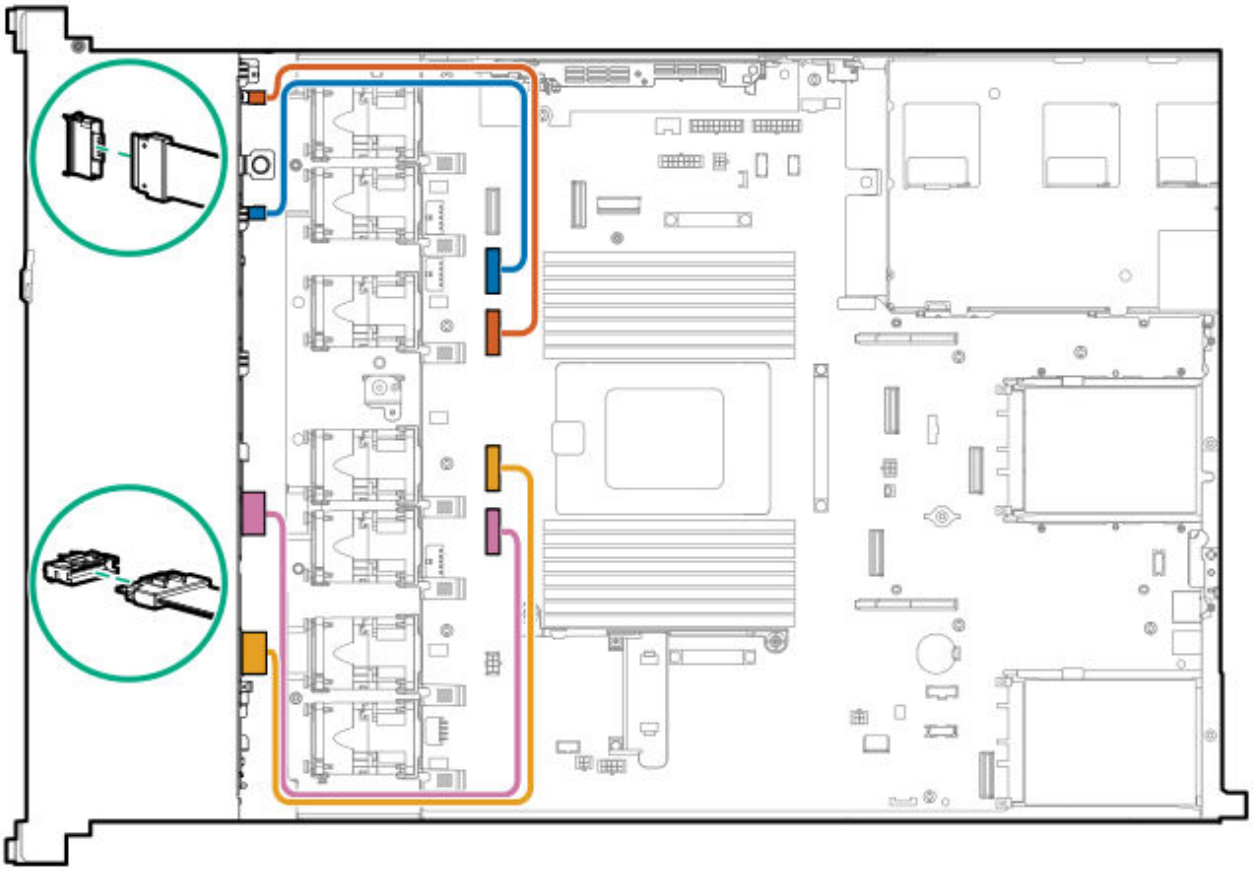

Cable part number	Color	From	To
P54588-001	Orange	8 SFF backplane port 1	System board port 3
P54587-001	Blue	8 SFF backplane port 2	System board port 4
P54589-001	Pink	8 SFF backplane port 3	System board port 1
P54586-001	Yellow	8 SFF backplane port 4	System board port 2

Cable routing: 2 SFF backplane to system board

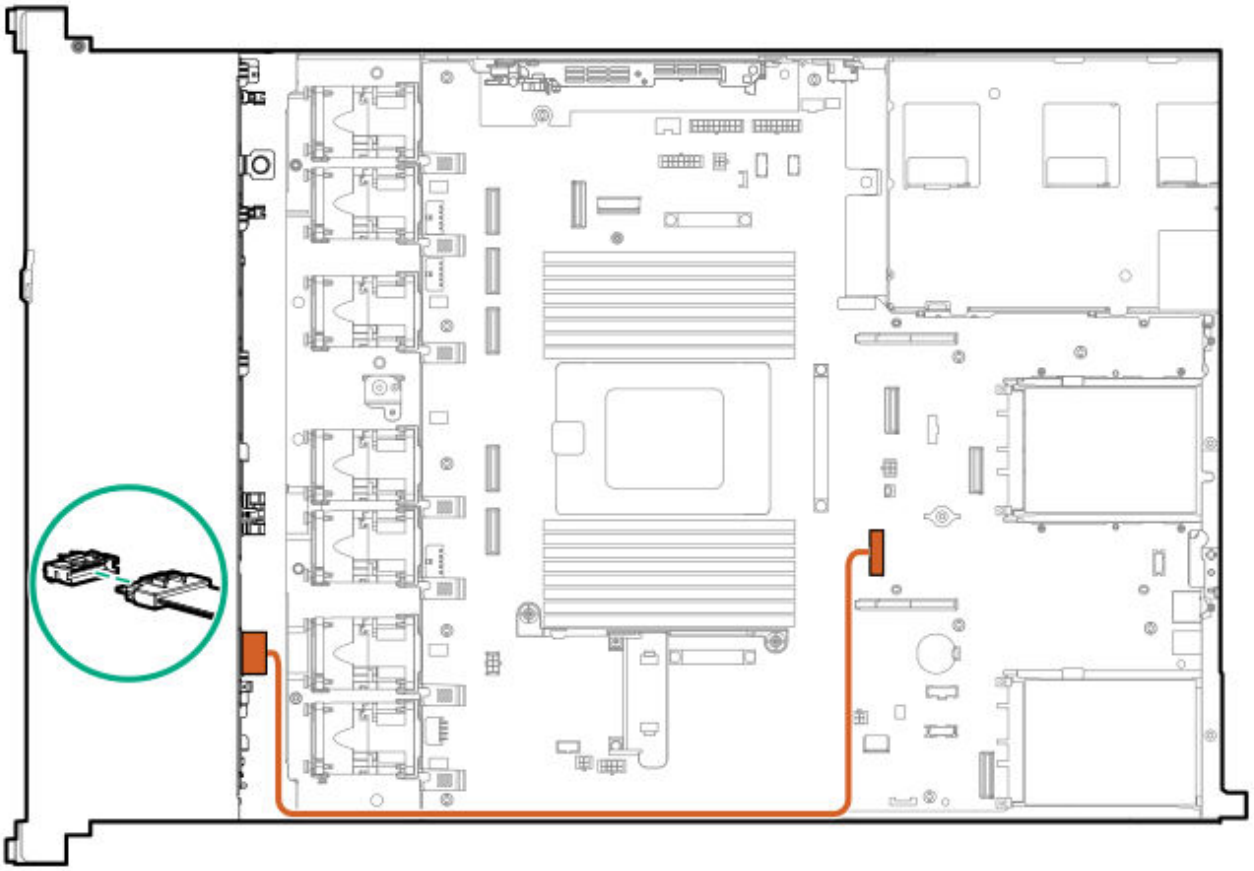

Cable part number	Color	From	To
P56178-001	Orange	2SFF backplane port 1	System board port 8

Cable routing: 8 SFF + 2 SFF backplane power

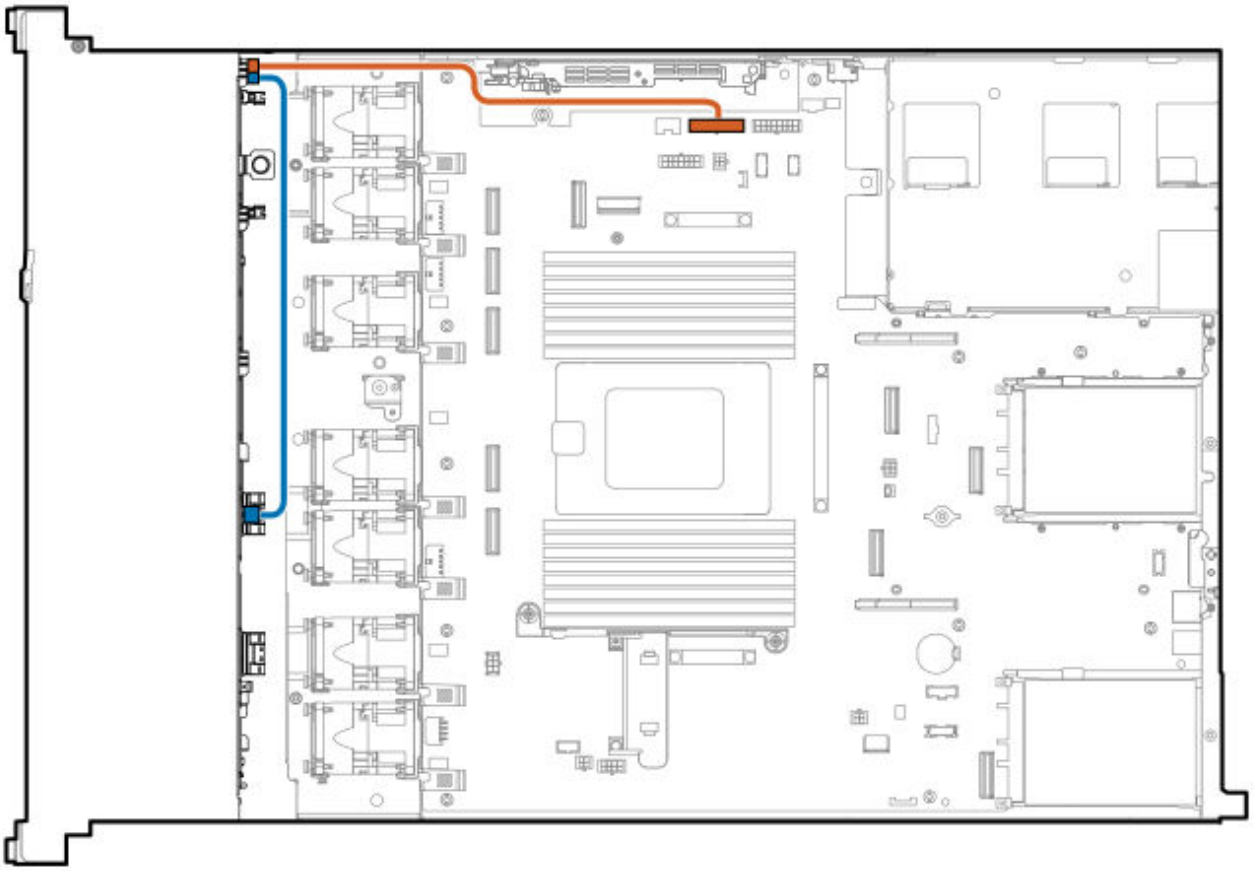

Cable part number	Color	From	To
P54590-001	Orange	8SFF backplane power	System board
P54591-001	Blue	2SFF backplane power	8SFF backplane

Cable routing: M.2 module

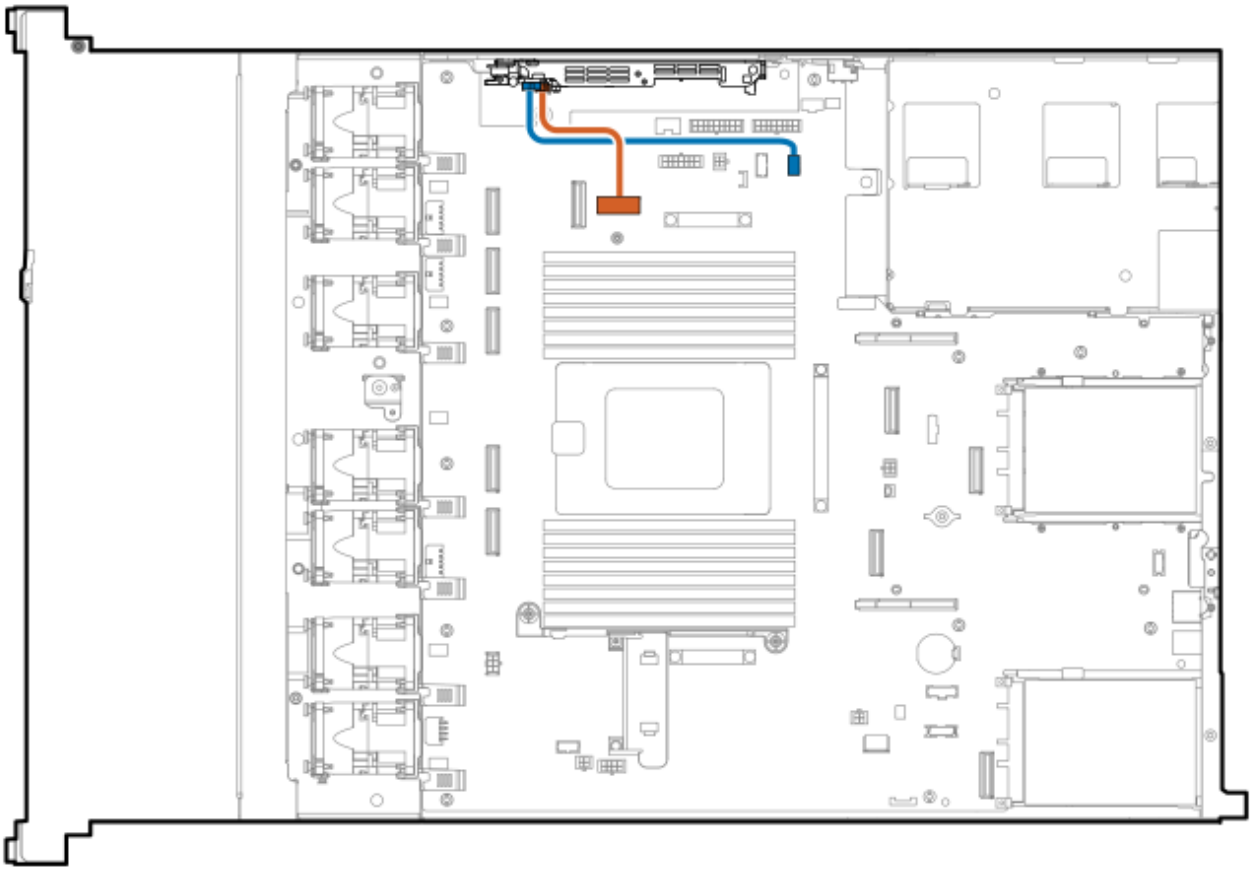

Cable part number	Color	From	To
P56689-001	Orange	M.2 module	System board
	Blue	M.2 module	system board

Cable routing: intrusion detection switch

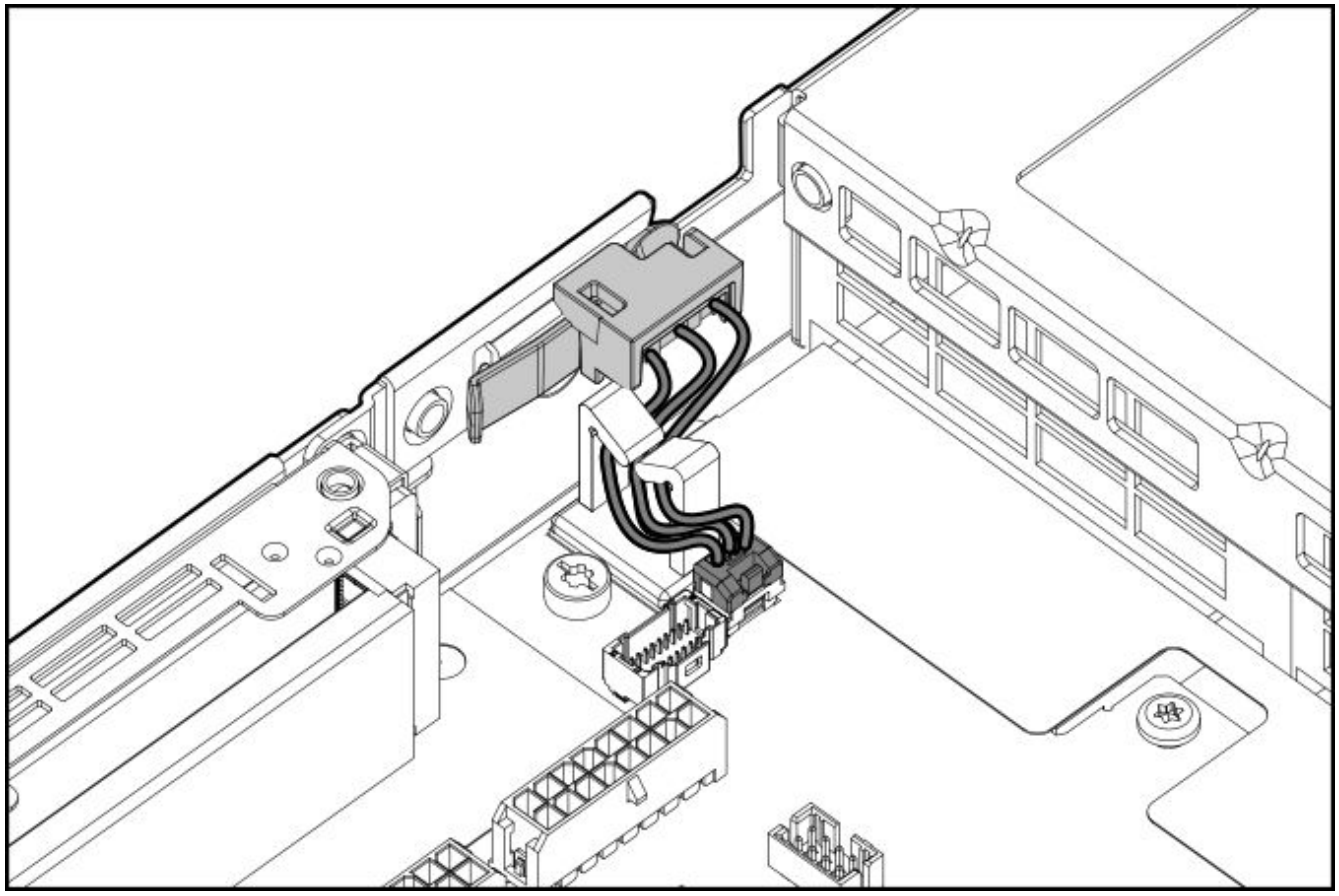

Cable routing: front I/O

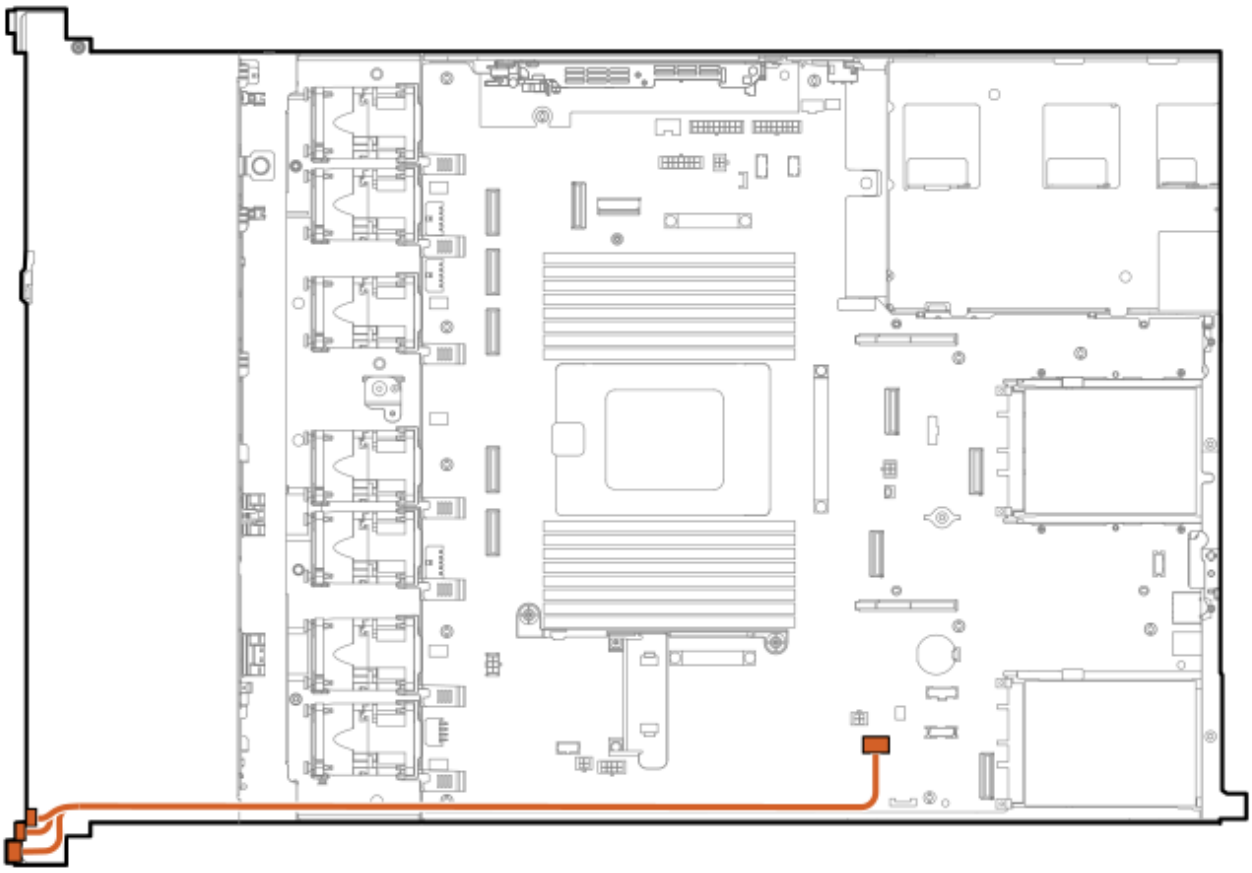

Cable routing: OCP x16 bandwidth upgrade

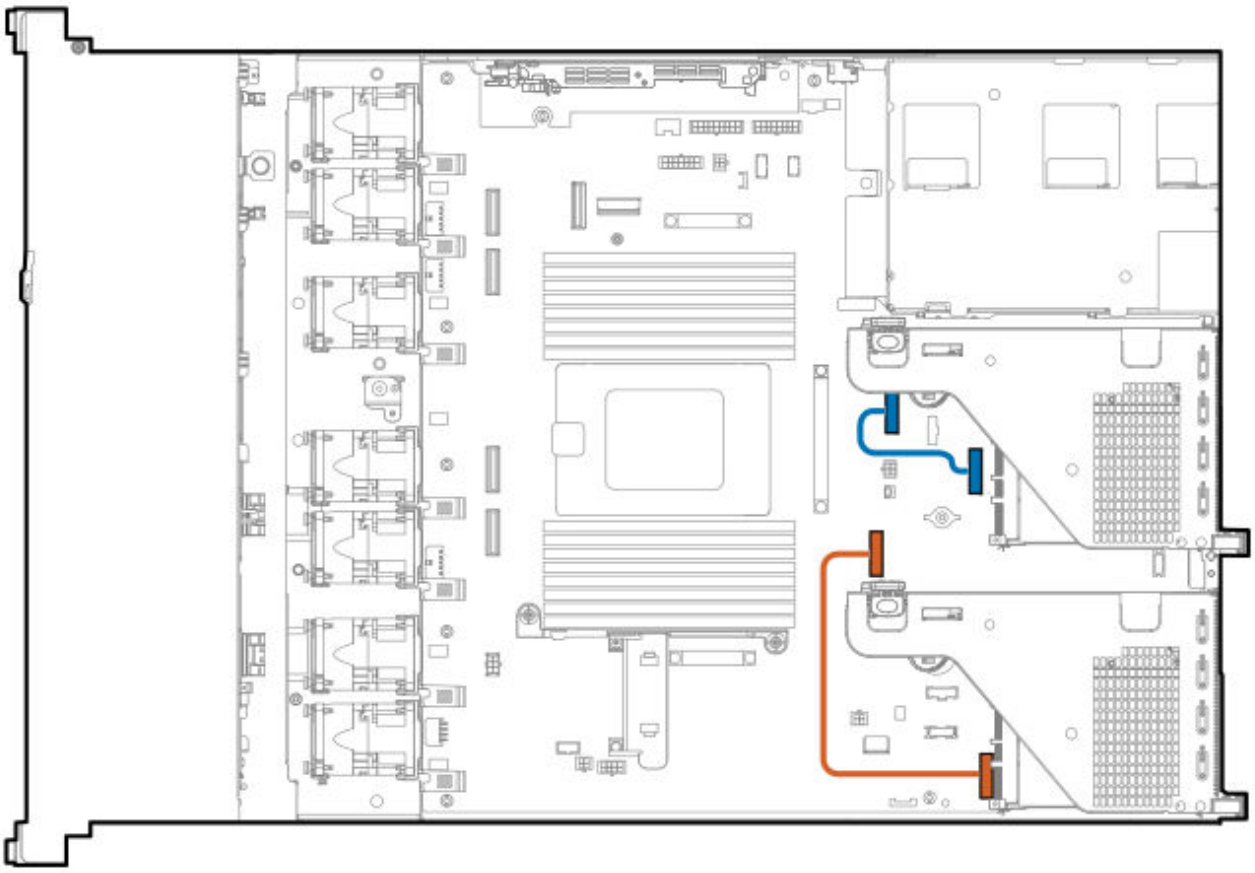

Cable part number	Color	From	To
P56686-001 [1]	Orange	OCP1 x16 upgrade port	OCP1 x16 link port
P56687-001 [2]	Blue	OCP2 x16 upgrade port	OCP2 x16 link port

[1] Option kit: P58922-B21
[2] Option kit: P58924-B21

Cable routing: serial port

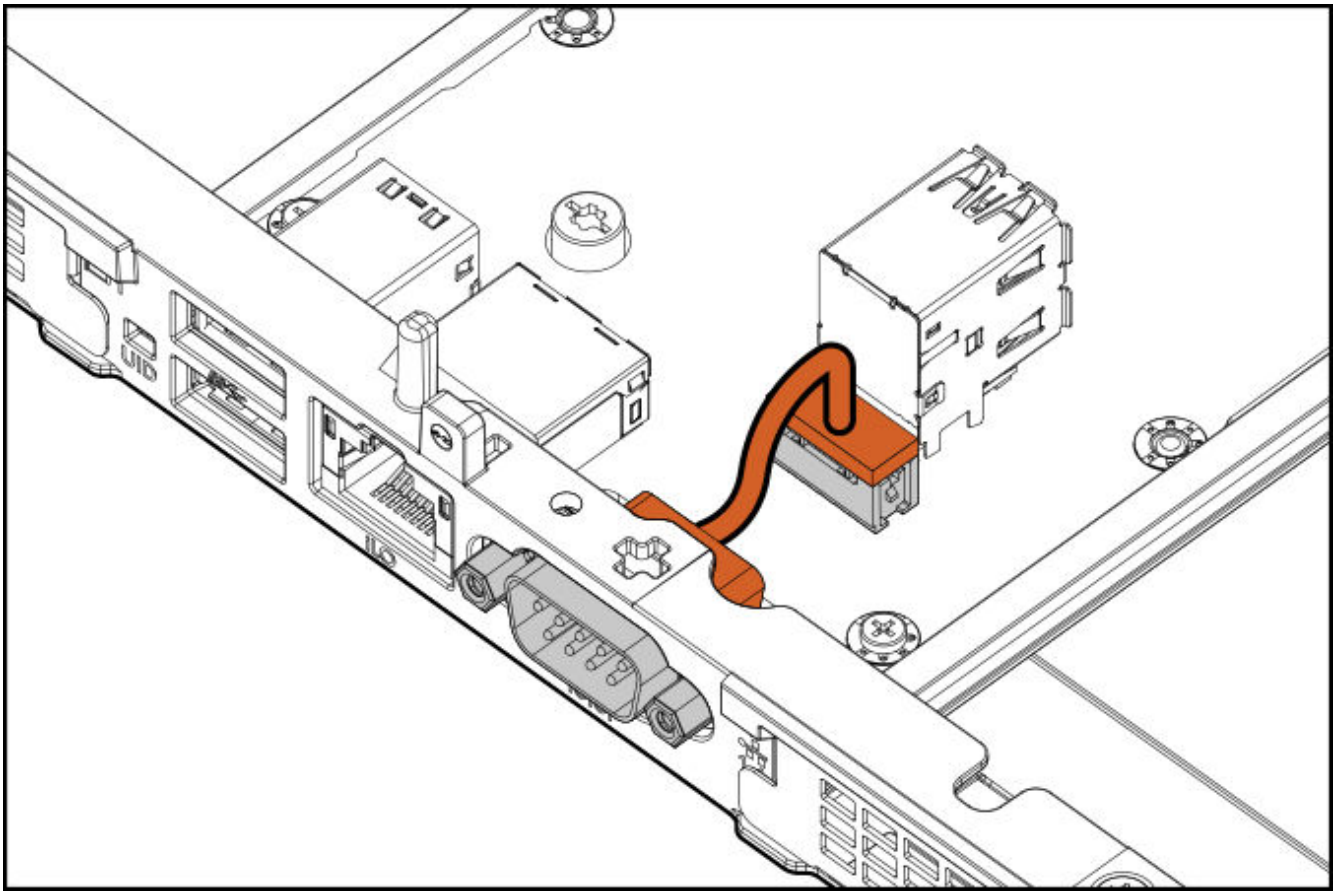

Configuration resources

Use the following resources to find documentation for configuring and managing your server.

- Some utilities might not apply to your server. For information about server compatibility with the products listed in this chapter, see the product QuickSpecs (**https://www.hpe.com/proliant/rl300**).
- Products ordered from HPE Factory Express might have already been configured with some or all the configurations in this chapter. To determine if any additional setup is required, see your HPE Factory Express order.
- For the most recent changes, feature enhancements, and bug fixes, see the latest product release notes.

Subtopics

Updating firmware or system ROM
Configuring the server
Deploying an OS
Configuring security

Optimizing the server
Server management

Updating firmware or system ROM

To download and deploy the RL component pack, see the latest RL Component Pack release notes: **https://www.hpe.com/info/rl300gen11-docs**

To	Use
Download RL Component Packs	HPE RL Component Packs (RLCP) **https://downloads.linux.hpe.com/SDR/repo/rlcp**
Deploy component packs to a single server	HPE iLO **https://www.hpe.com/support/ilo-docs** RESTful Interface Tool **https://www.hpe.com/support/restfulinterface/docs**

Configuring the server

To configure	Use
Single server (GUI)	• iLO remote console or web interface **http://www.hpe.com/support/ilo-docs** • UEFI System Utilities **https://www.hpe.com/info/UEFI-manuals**
Single server (scripting)	• RESTful Interface Tool **https://www.hpe.com/support/restfulinterface/docs**

To configure	Use
	• Python iLO Redfish Library (python-ilorest-library) **https://github.com/HewlettPackard/python-ilorest-library** • iLO RESTful API **https://hewlettpackard.github.io/ilo-rest-api-docs/**

Deploying an OS

For a list of supported operating systems, see the HPE Servers Support & Certification Matrices:

https://www.hpe.com/support/Servers-Certification-Matrices

To	See
Configure the server to boot from a PXE server	UEFI System Utilities User Guide for HPE ProLiant Gen11 Servers and HPE Synergy **https://www.hpe.com/info/UEFI-manuals**
Deploy an OS using iLO virtual media	iLO user guide **http://www.hpe.com/support/ilo-docs**

Configuring security

To	See
Implement server security best practices.	• HPE Compute Security Reference Guide

To	See
	https://www.hpe.com/info/server-security-reference-en • HPE iLO 6 Security Technology Brief **https://www.hpe.com/support/ilo6-security-en**
Configure and use the Server Configuration Lock feature on HPE Trusted Supply Chain servers and other servers that have the Server Configuration Lock feature enabled.	Server Configuration Lock User Guide for HPE ProLiant servers and HPE Synergy **https://www.hpe.com/info/server-config-lock-UG-en**

Optimizing the server

To	See
Optimize server performance through management and tuning features.	HPE Server Performance Management and Tuning Guide **https://www.hpe.com/info/server-performance-management-tuning-en**
Obtain recommendations for resolving incorrect settings.	HPE InfoSight for Servers User Guide **https://www.hpe.com/support/InfoSight-for-Servers-UG-en**

Server management

To monitor	See
Single server	HPE iLO **https://www.hpe.com/support/ilo-docs**

Troubleshooting resources

To access troubleshooting resources for your product, see the **Hewlett Packard Enterprise website**.

Safety, warranty, and regulatory information

Subtopics

Regulatory information
Warranty information

Regulatory information

To view the regulatory information for your product, view the Safety and Compliance Information for Server, Storage, Power, Networking, and Rack Products, available at the Hewlett Packard Enterprise Support Center:

https://www.hpe.com/support/Safety-Compliance-EnterpriseProducts

Additional regulatory information

Hewlett Packard Enterprise is committed to providing our customers with information about the chemical substances in our products as needed to comply with legal requirements such as REACH (Regulation EC No 1907/2006 of the European Parliament and the Council). A chemical information report for this product can be found at:

https://www.hpe.com/info/reach

For Hewlett Packard Enterprise product environmental and safety information and compliance data, including RoHS and REACH, see:

https://www.hpe.com/info/ecodata

For Hewlett Packard Enterprise environmental information, including company programs, product recycling, and energy efficiency, see:

https://www.hpe.com/info/environment

Subtopics

Notices for Eurasian Economic Union
Turkey RoHS material content declaration
Ukraine RoHS material content declaration

Notices for Eurasian Economic Union

EAC

Manufacturer and Local Representative Information

Manufacturer information:

Hewlett Packard Enterprise Company, 1701 E Mossy Oaks Road, Spring, TX 77389 U.S.

Local representative information Russian:

- **Russia**
  ООО "Хьюлетт Паккард Энтерпрайз", Российская Федерация, 125171, г. Москва, Ленинградское шоссе, 16А, стр.3, Телефон: +7 499 403 4248 Факс: +7 499 403 4677
- **Kazakhstan**
  ТОО «Хьюлетт-Паккард (К)», Республика Казахстан, 050040, г. Алматы, Бостандыкский район, проспект Аль-Фараби, 77/7, Телефон/факс: + 7 727 355 35 50

Local representative information Kazakh:

- **Russia**
  ЖШС "Хьюлетт Паккард Энтерпрайз", Ресей Федерациясы, 125171, Мәскеу, Ленинград тас жолы, 16А блок 3, Телефон: +7 499 403 4248 Факс: +7 499 403 4677
- **Kazakhstan**
  ЖШС «Хьюлетт-Паккард (К)», Қазақстан Республикасы, 050040, Алматы к., Бостандык ауданы, Әл-Фараби даңғ ылы, 77/7, Телефон/факс: +7 727 355 35 50

Manufacturing date:

The manufacturing date is defined by the serial number.

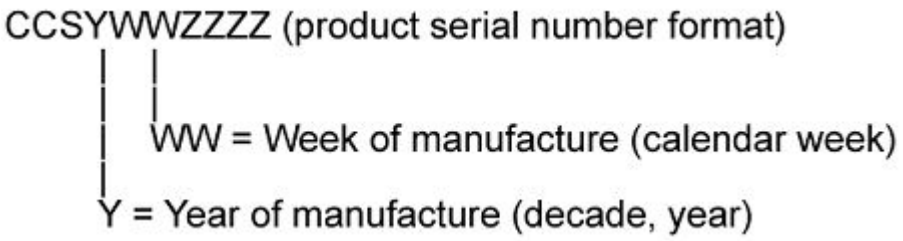

If you need help identifying the manufacturing date, contact **tre@hpe.com**.

Turkey RoHS material content declaration

Türkiye Cumhuriyeti: AEEE Yönetmeliğine Uygundur

Ukraine RoHS material content declaration

Обладнання відповідає вимогам Технічного регламенту щодо обмеження використання деяких небезпечних речовин в електричному та електронному обладнанні, затвердженого постановою Кабінету Міністрів України від 3 грудня 2008 № 1057

Warranty information

To view the warranty information for your product, see the links provided below:

HPE ProLiant and IA-32 Servers and Options

https://www.hpe.com/support/ProLiantServers-Warranties

HPE Enterprise and Cloudline Servers

https://www.hpe.com/support/EnterpriseServers-Warranties

HPE Storage Products

https://www.hpe.com/support/Storage-Warranties

HPE Networking Products

https://www.hpe.com/support/Networking-Warranties

Specifications

Subtopics

Environmental specifications
Server specifications
Power supply specifications

Environmental specifications

Specifications	Value
Temperature range*	—
Operating	10°C to 35°C (50°F to 95°F)
Nonoperating	-30°C to 60°C (-22°F to 140°F)
Relative humidity (noncondensing)	—
Operating	8% to 90% 28°C (82.4°F) maximum wet bulb temperature, noncondensing
Nonoperating	5% to 95% 38.7°C (101.7°F) maximum wet bulb temperature, noncondensing
Altitude	—
Operating	3050 m (10,000 ft) This value may be limited by the type and number of options installed. Maximum allowable altitude change rate is 457 m/min (1,500 ft/min).
Nonoperating	9144 m (30,000 ft) Maximum allowable altitude change rate is 457 m/min (1,500 ft/min).

Standard operating support

10° to 35°C (50° to 95°F) at sea level with an altitude derating of 1.0°C per every 305 m (1.8°F per every 1,000 ft) above sea level to a maximum of 3,050 m (10,000 ft), no direct sustained sunlight. Maximum rate of change is 20°C/hr (36°F/hr). The upper limit and rate of change may be limited by the type and number of options installed.

System performance during standard operating support might be reduced if operating above 30°C (86°F).

Server specifications

Specification	Value
Dimensions	—
Height	4.29 cm (1.69 in)
Depth	71.30 cm (28.07 in)
Width	48.26 cm (19.00 in)
Weight, approximate values	—
Minimum	13.36 kg (29.46 lb)
Maximum	15.85 kg (35.94 lb)

Power supply specifications

Depending on the installed options and the regional location where the server was purchased, the server can be configured with one of the following power supplies:

- HPE 800 W Flex Slot Titanium Hot-plug Low Halogen Power Supply

For detailed power supply specifications, see the QuickSpecs on the **Hewlett Packard Enterprise website**.

Subtopics

HPE 800 W Flex Slot Titanium Hot-plug Low Halogen Power Supply

HPE 800 W Flex Slot Titanium Hot-plug Low Halogen Power Supply

Specification	Value
Input requirements	—
Rated input voltage	200 VAC to 240 VAC 240 VDC for China only

Specification	Value
Rated input frequency	50 Hz to 60 Hz Not applicable to 240 VDC
Rated input current	4.35 A at 200 VAC 3.62 A at 240 VAC 3.62 A at 240 VDC for China only
Maximum rated input power	851 W at 200 VAC 848 W at 240 VAC 848 W at 240 VDC for China only
BTUs per hour	2905 at 200 VAC 2893 at 240 VAC 2893 at 240 VDC for China only
Power supply output	—
Rated steady-state power	800 W at 200 VAC to 240 VAC input 800 W at 240 VDC input for China only
Maximum peak power	800 W at 200 VAC to 240 VAC input 800 W at 240 VDC input for China only

Websites

Product page

https://www.hpe.com/proliant/rl300

Documentation

https://www.hpe.com/info/RL300Gen11-docs

Support and other resources

- Accessing Hewlett Packard Enterprise Support

- Accessing updates
- Customer self repair
- Remote support
- Documentation feedback

Subtopics

Accessing Hewlett Packard Enterprise Support
Accessing updates
Customer self repair
Remote support
Documentation feedback

Accessing Hewlett Packard Enterprise Support

- For live assistance, go to the Contact Hewlett Packard Enterprise Worldwide website:

  https://www.hpe.com/info/assistance

- To access documentation and support services, go to the Hewlett Packard Enterprise Support Center website:

  https://www.hpe.com/support/hpesc

Information to collect

- Technical support registration number (if applicable)
- Product name, model or version, and serial number
- Operating system name and version
- Firmware version
- Error messages
- Product-specific reports and logs
- Add-on products or components
- Third-party products or components

Accessing updates

- Some software products provide a mechanism for accessing software updates through the product interface. Review your product documentation to identify the recommended software update method.
- To download product updates:

  Hewlett Packard Enterprise Support Center

  https://www.hpe.com/support/hpesc

  Hewlett Packard Enterprise Support Center: Software downloads

  https://www.hpe.com/support/downloads

  My HPE Software Center

  https://www.hpe.com/software/hpesoftwarecenter

- To subscribe to eNewsletters and alerts:

  https://www.hpe.com/support/e-updates

- To view and update your entitlements, and to link your contracts and warranties with your profile, go to the Hewlett Packard Enterprise Support Center **More Information on Access to Support Materials** page:

  https://www.hpe.com/support/AccessToSupportMaterials

> **IMPORTANT:**
> Access to some updates might require product entitlement when accessed through the Hewlett Packard Enterprise Support Center. You must have an HPE Onepass set up with relevant entitlements.

Customer self repair

Hewlett Packard Enterprise customer self repair (CSR) programs allow you to repair your product. If a CSR part needs to be replaced, it will be shipped directly to you so that you can install it at your convenience. Some parts do not qualify for CSR. Your Hewlett Packard Enterprise authorized service provider will determine whether a repair can be accomplished by CSR.

For more information about CSR, contact your local service provider.

Remote support

Remote support is available with supported devices as part of your warranty or contractual support agreement. It provides intelligent event diagnosis, and automatic, secure submission of hardware event notifications to Hewlett Packard Enterprise, which initiates a fast and accurate resolution based on the service level of your product. Hewlett Packard Enterprise strongly recommends that you register your device for remote support.

If your product includes additional remote support details, use search to locate that information.

HPE Get Connected

https://www.hpe.com/services/getconnected

HPE Pointnext Tech Care

https://www.hpe.com/services/techcare

HPE Complete Care

https://www.hpe.com/services/completecare

Documentation feedback

Hewlett Packard Enterprise is committed to providing documentation that meets your needs. To help us improve the documentation, use the **Feedback** button and icons (located at the bottom of an opened document) on the Hewlett Packard Enterprise Support Center portal (**https://www.hpe.com/support/hpesc**) to send any errors, suggestions, or comments. All document information is captured by the process.