RETIRED: This document has been officially retired, and the base products listed herein are now considered obsolete and are no longer available for sale. Consequently, the information contained within may no longer be current. This document is provided exclusively for reference and informational purposes.

QuickSpecs

Overview

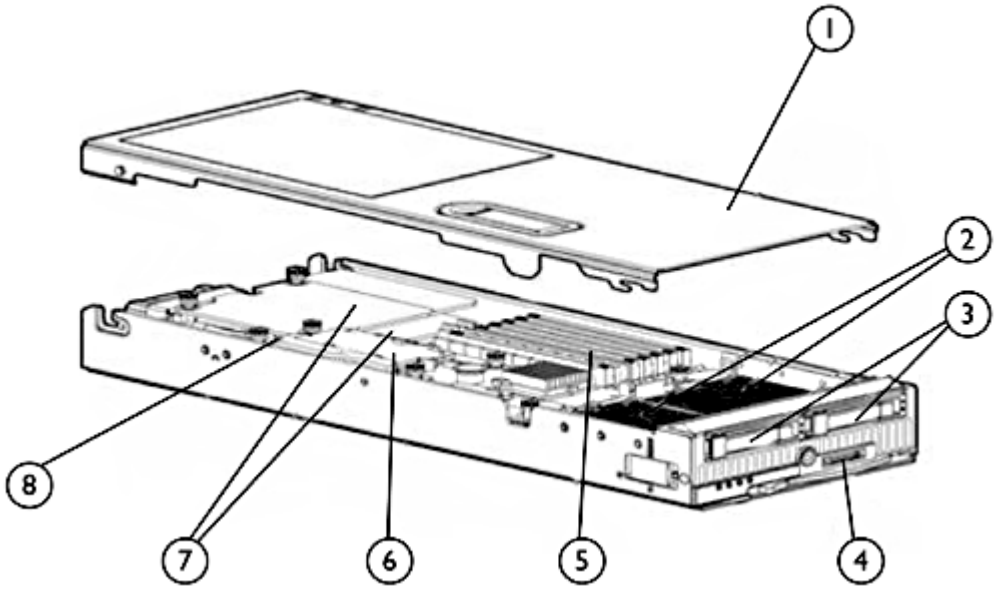

HP ProLiant BL460c G5 Server Blade

1. Access Panel
2. Up to two Quad-Core Intel® Xeon® 5000 Sequence processors
3. Small form factor (SFF) hot-plug drive bays
4. Local I/O connector
5. Eight (8) PC2-5300, Fully Buffered DIMMs (DDR2-667) Memory Slots
6. HP Smart Array E200i Controller with optional battery-backed write cache
7. Two Mezzanine slots
8. Internal USB Connector

What's New

- Support for Hot Plug SAS Midline 500GB 6G SAS 7.3K SFF DP MDL Hard Drive

At A Glance

This document covers the HP ProLiant BL460c G5 server blade only. For more information on HP BladeSystems c-Class Infrastructure and HP BladeSystem c-Class Interconnect Components, please see the following QuickSpecs:

HP BladeSystem c-Class Enclosures QuickSpecs:
HP BladeSystem c3000 Enclosure QuickSpecs:
http://h18000.www1.hp.com/products/quickspecs/12790_div/12790_div.html

HP BladeSystem c7000 Enclosure QuickSpecs:
http://h18000.www1.hp.com/products/quickspecs/12810_div/12810_div.html

HP BladeSystem c-Class Interconnect Components QuickSpecs:
http://h18000.www1.hp.com/products/quickspecs/12524_div/12524_div.html

Overview

The HP ProLiant BL460c G5 provides greater 2P x86 server blade density without compromise and maximum power-efficiency with flexibility and choice.

HP ProLiant BL460c G5 server blade includes:

- Processor:
  - Up to two Quad-Core Intel® Xeon® 5400 Series processors
  - Intel 5000P chipset supporting up to a 1333 MHz Front Side Bus
- Memory:
  - Up to 64GB memory, supported by (8) slots of PC2-5300 Fully Buffered DIMMs at 667 MHz
  - Advanced ECC memory support
  - Supporting memory interleaving (2x1); memory mirroring and online spare capacity.
- Storage Controller:
  - Integrated HP Smart Array E200i RAID controller with 64 MB cache (with optional battery-backed write-cache) with an upgrade to 128 MB cache in standard BTO models. Supports RAID 0,1 in standard BTO models
- Internal Drive Support:
  - Up to 2 small form factor (SFF) SAS or SATA hot plug hard disk drives in standard BTO models
- Network Controller:
  - Two (2) embedded NC373i Multifunction Gigabit Server Adapters with iSCSI boot, TCP/IP offload engine, and optional accelerated iSCSI
  - One (1) additional embedded 10/100 network adapter dedicated to iLO 2 management
    NOTE: The Gigabit Ethernet adapters transmit from the server at 2000 Mbps only, full duplex per port. For more information, see the "Network Controller" item in Standards Features section.
- Mezzanine Support:
  - Two (2) additional I/O expansion slots via mezzanine card.
  - Supports up to two (2) mezzanine cards
    - Dual-Port Fibre Channel Mezzanine (4-Gb) options for SAN connectivity (Choice of Emulex or QLogic).
    - Wide variety of 10GbE and 1GbE network adapter options for additional network ports
    - QLogic QMH4062 Gigabit Ethernet iSCSI initiator
    - 4X DDR InfiniBand (IB) Mezzanine (20 Gb/s) options for low latency server interconnectivity (based on Mellanox technology
    - I/O Accelerator mezzanine options for high transaction rate local storage
- Internal USB Support:
  - One (1) internal USB 2.0 connector for security key devices and USB drive keys in standard BTO models
- Form Factor:
  - HP ProLiant BL460c G5 server blade plugs vertically into the BladeSystem c3000 and c7000 enclosures
- Infrastructure Management:
  - HP ProLiant Onboard Administrator (powered by the HP Integrated Lights-Out 2 management processor) for simplified server setup, health monitoring and recovery, power and thermal control, and lights-out remote administration.
  - HP Insight Control suites deliver essential infrastructure management that can help save time and money by making it easy to deploy, monitor, control and optimize your IT infrastructure through a single, simple management console. Insight Control suites support both Windows and Linux-based servers and management consoles.
  - HP Insight Dynamics - VSE suite for ProLiant servers, a product option, is an integrated command center that enables you to continuously analyze and optimize your adaptive infrastructure. This advanced infrastructure management software lets you reduce the cost of common data center tasks by as much as 40 percent while keeping pace with your changing business.
- Operating Systems and Virtualization Software:
  - Supports Windows, RHEL, SLES, OEL, NetWare, VMware, Solaris & Citrix XenServer
- Enclosures:
  - HP offers three different c-Class server blade enclosures to meet your individual needs:
    - The HP BladeSystem c7000 rack enclosure is 10U high and holds up to 16 ProLiant BL460c G5 servers plugged

- vertically.
  - The HP BladeSystem c3000 rack enclosure is 6U high and holds up to 8 HP ProLiant BL460c G5 servers plugged horizontally.
  - The HP BladeSystem c3000 tower enclosure is designed with casters for sites without racks and holds up to 8 HP ProLiant BL460c G5 servers plugged vertically.
- Server blades, storage blades, interconnect modules, power supplies, fans, and redundant Onboard Administrator modules are all designed to fit into the c3000 and c7000 enclosures.

- For additional enclosure information, please see: http://h18004.www1.hp.com/products/blades/components/enclosures/c-class/index.html.
- Warranty:
  - This product is covered by a global limited warranty and supported by HP Services and a worldwide network of HP Authorized Channel Partners. Hardware diagnostic support and repair is available for three years from date of purchase. Support for software and initial setup is available for 90 days from date of purchase. Enhancements to warranty services are available through HP Care Pack services or customized service agreements. Certain restrictions and exclusions apply. Hard drives have either a one year or three year warranty; refer to specific hard drive QuickSpecs for details.
    NOTE: Server warranty includes 3 year Parts, 3 year Labor, 3-year on-site support. Warranty repairs may be accomplished through the use of Customer Self Repair (CSR) parts. These parts fall into two categories: 1) Mandatory CSR parts are designed for easy replacement. A travel and labor charge will result when customers decline to replace a Mandatory CSR part; 2) Optional CSR parts are also designed for easy replacement but may involve added complexity. Customers may choose to have HP replace Optional CSR parts at no charge. Additional information regarding worldwide limited warranty and technical support is available at:
    http://h18004.www1.hp.com/products/servers/platforms/warranty/index.html

Standard Features

Processor	Quad-Core Processor Option Kits Intel® Xeon® Processor E5450 (3.0 GHz, 1333 FSB, 80W) Intel® Xeon® Processor L5430 (2.66 GHz, 1333 FSB, 50W) Intel® Xeon® Processor L5420 (2.50 GHz, 1333 FSB, 50W) NOTE: Intel 5400 Series processors are 64-bit and support Intel VT. Intel. NOTE: For the Intel 5400 Series, the letter preceding the model number indicates the performance/wattage of the processor. "X" denotes High Performance/Wattage; "E" denotes Enterprise Performance/Wattage (Mainstream); and "L" denotes Lower Wattage.	
Upgradeability	Upgradeable to 2 processors Upgradeable to 2 processors (8 cores) Future upgradeable to Xeon® Series 5400/5300 Quad-Core processors (Please contact your regional sales support to determine quad core upgradeability. Some of the earlier shipping models may not support this upgrade). 5100 Dual-Core models are not upgradeable to the 5200 Dual-Core processors.	
Cache Memory	2 x 6 MB shared L2 cache (5400 Series)	
Chipset	Intel® 5000P Chipset	
Memory	Type	PC2-5300 Fully Buffered DIMMs at 667 MHz
	Standard	2 GB LP (2 x 1 GB)
	Maximum	64 GB (8 x 8 GB) NOTE: Memory must be installed in pairs.
Network Controller	Two (2) embedded NC373i Multifunction Gigabit Server Adapters with iSCSI boot, TCP/IP offload engine, and optional accelerated iSCSI One (1) additional 10/100 NIC dedicated to iLO 2 Management NOTE: The Gigabit Ethernet adapters transmit from the server at 2000 Mbps, full duplex per port only. However, within a Linux environment, the speed can be reduced or "throttled" using a feature available within the Linux operating system; see the white paper at: http://h71028.www7.hp.com/ERC/downloads/4AA1-5513ENW.pdf for more information. Once the adapter signal reaches the interconnect within the blade enclosure and communicates outside the blade enclosure to the LAN, the blade interconnect uplink types and settings determine the cable media, speed, duplex mode, and auto negotiation mode. Interconnects are available with Ethernet uplinks supporting 10/100/1000T, 10/100/1000 SFP, 1000 SX fiber, and 10Gb KX-4.	

Standard Features

Multifunction Networking

The embedded multifunction NC373i adapters combine standard Gigabit Ethernet networking, TCP/IP offload engine (TOE), iSCSI boot and optional accelerated iSCSI into a single adapter.

- TOE moves the processing of data in the TCP protocol stack from the server CPU to the network card, freeing CPU cycles for other activities. With TOE, network communications are improved, and server efficiency is increased. The NC373i offers TOE for Microsoft® Windows 2000 and 2003 environments.
- The iSCSI network boot (iSCSI boot) allows the BL460c G5 to boot from a remote operating system (OS) image located on a storage area network (SAN). The BL460c G5 uses an iSCSI firmware image (iSCSI boot option ROM) making the remote disk drive appear as a local, bootable C: drive. The BL460c G5 is configured to connect to and boot from the iSCSI target disk on the network and download the OS image from the iSCSI target disk. The iSCSI boot option ROM is supplied by HP at no cost. The additional cost and mezzanine slot usage of an add-in iSCSI HBA card is not required. Additionally, the HP iSCSI boot solution includes scripts to significantly simplify the installation process.
- The accelerated iSCSI feature of the embedded multifunction adapter requires the HP Accelerated iSCSI Pack. For more information, please see the Quickspecs at http://h18000.www1.hp.com/products/quickspecs/12466_div/12466_div.html

I/O Expansion Slots	Two I/O expansion mezzanine slots (one x8 and one x4)		
Integrated Manageability	Integrated Lights-Out 2 (iLO 2) Standard Blade Edition (integrated on motherboard)		
Storage Controller	HP Smart Array E200i Controller	64 MB memory module supports RAID 0,1 Available upgrades: 128 MB with Battery-backed write cache	
Maximum Internal Storage	Hot Plug SAS Hot Plug SATA	1TB 500GB	2 x 500GB Serial SCSI 2 x 250GB Serial ATA
Graphics	Integrated ATI RN-50, 32 MB video memory)		
Graphics Resolution Supported	Resolution Color Depths	1600 x 1280, 64K, 256, 16 1280 x 1024, 16.7M, 64k, 256, 16 1024 x 768, 16.7M, 64k, 256,16 800 x 600, 16,7M, 64k, 256, 16 640 x 480, 16,7M, 64k, 256, 16 NOTE: Maximum resolution available via ProLiant Onboard Administrator remote console is 1280 x 1024.	

Standard Features

Fibre Channel Support

Two optional Fibre Channel HBAs are supported by the HP ProLiant BL460c G5. Both mezzanine circuit boards connect directly to the server blade system board. These Fibre Channel HBAs are available via option kits and must be ordered separately.

Two option kits

Emulex LPe1105-HP 4Gb FC HBA for HP c-Class BladeSystem (403621-B21)

- Based on the same field-proven ASIC, firmware, and driver technology as Emulex's renowned LPe1150 HBA, the Emulex LPe1105-HP is fully driver compatible with all Emulex HBAs

QLogic QMH2462 4Gb FC HBA for HP c-Class BladeSystem (403619-B21)

- Uses common drivers which means that customers can standardize on one QLogic driver whether they are using the QMH2462 or other 4Gb and 2Gb HBAs powered by QLogic

Emulex and QLogic Fibre Channel HBAs feature:

- Optimal performance utilizing PCI Express
- 4/2/1Gb/s auto negotiating speeds
- Dual-ports for redundant path connections
- Up to two FC HBAs per server blade providing redundant FC HBA support
- Optimized for HP StorageWorks and supported by third party SAN vendors
- Support for Microsoft® Windows® and Linux operating systems environments

---

Compatible SAN

HP ProLiant BL460c G5 server blades are optimized for HP StorageWorks MSA, EVA and XP

HP ProLiant BL460c G5 server blades are compatible with select 3rd party SANs (please see blade storage page for more details: http://h18000.www1.hp.com/products/servers/proliant-bl/c-class/storage.html

Standard Features

Core Infrastructure Management	HP Insight Foundation	Managing the growing number of servers can be complex and expensive for your organization. IT managers need to address changing business needs with tools that meet the challenges of managing today's complex Datacenters. HP provides management solutions that are designed to simplify a server's installation, configuration and maintenance throughout the entire server lifecycle. This provides the customer with higher levels of operational efficiency and highly reliable systems: http://www.hp.com/go/foundation. The foundation pack includes: • HP SmartStart • HP Management • HP ProLiant Firmware Maintenance SmartStart version supported (minimum): SmartStart 8.0. http://www.hp.com/servers/smartstart
	ProLiant Onboard Administrator	HP ProLiant Onboard Administrator (powered by the HP Integrated Lights-Out 2 management processor) simplifies server setup, health monitoring, power and thermal control, and lights-out remote administration of ProLiant ML, DL, and BL servers. HP ProLiant Onboard Administrator functions without additional software, and can be accessed from any location via a web browser. It works hand-in-hand with HP Systems Insight Manager, Insight Control suites, and the Insight Dynamics-VSE suite helping customers unlock the value of the ProLiant platform and deliver the highest possible quality of IT service to the business. See: www.hp.com/go/ProLiantOA
	HP Insight Control suites	HP Insight Control suites, as product options, deliver essential infrastructure management that can help save time and money by making it easy to deploy, monitor, remote control, and optimize your IT infrastructure through a single, simple management console. Insight Control suites install and license software modules that are integrated into HP System Insight Manager. Two Insight Control suites are available, to serve environments requiring either Linux-based or Windows-based central management server: HP Insight Control suite for Linux, and HP Insight Control suite. See www.hp.com/go/insightcontrol HP Insight Control suites include one year of 24 x 7 HP Software Technical Support and Update Service ensuring rapid access to HP support staff and proactive delivery of software updates. For more information about this service, please visit: http://www.hp.com/services/insight.
	HP Insight Dynamics - VSE suite	The HP Insight Dynamics - VSE suite for ProLiant, a product option, is an integrated command center that enables you to continuously analyze and optimize your adaptive infrastructure. This advanced infrastructure management software that allows you to analyze and optimize your adaptive infrastructure to manage physical and virtual resources in the same way. HP Insight Dynamics - VSE gives you a powerful toolkit to accelerate complex technology projects and simplify daily operations. It enables you to plan capacity and power continuously, balance across physical and virtual

resources, ensure cost-effective high availability, and provision infrastructure consistently.

HP Insight Orchestration, an optional extension to Insight Dynamics - VSE, enables IT organizations to provision infrastructure consistently and automatically from pools of shared resources using a self-service portal. Resources provisioned can range from a single virtual machine to complex multi-tier environments and their associated physical and virtual resource requirements.

HP Insight Recovery, also an optional extension for Insight Dynamics - VSE, enables cost-effective disaster recovery for physical and virtual environments. Application environments can be reactivated in minutes with the touch of a button to a remote location.

NOTE: For more information, visit:
http://www.hp.com/go/insightdynamics,
http://www.hp.com/go/insightorchestration,
http://www.hp.com/go/insightrecovery

Operating Systems and Virtualization Software Support for ProLiant Servers

Microsoft Windows Server
Microsoft Windows Server Hyper-V
Red Hat Enterprise Linux (RHEL)
SUSE Linux Enterprise Server (SLES)
Oracle Enterprise Linux (OEL)
Solaris 10 for x86/x64 based Systems
VMware
Citrix XenServer

NOTE: For more information on HP's Certified and Supported ProLiant Servers for OS and Virtualization Software and latest listing of software drivers available for your server, please visit our Support Matrix at: http://www.hp.com/go/supportos our driver download page http://www.hp.com/support/BL460cG5

Integrated Manageability

iLO 2 Advanced for BladeSystem (integrated on motherboard)

- Graphical Remote Console
- New iLO Text Console
- Measure, regulate, and cap server power consumption
- Automatically captured video footage of last boot sequence
- Automatically captured video footage of last fault sequence (such as blue screen)
- On-Demand video recording for training or quality assurance needs
- Global team collaboration for up to four remote users
- Virtual media and folders (no ISO or floppy image needed)
- LDAP integration
- MS Terminal Services Pass-through
- Remote Serial Console
- Virtual Power Button Control
- Plus all capabilities of iLO 2 Standard Blade Edition

Integrated Lights-Out 2 Standard Blade Edition (iLO 2)

Standard Features

- Graphical Remote Console
- Virtual media (single server, browser based access only)
- Remote Serial Console
- OS independent hardware health status

NOTE: For more information on HP Integrated Lights-Out, visit: www.hp.com/go/iLO.

Availability

- Dual-Port Fibre Channel Mezzanine Card for redundant SAN connection
- Two (2) embedded Gigabit Ethernet adapters for redundant LAN connections
- Two (2) hot-plug SAS/SATA hard drive bays and integrated RAID (HP Smart Array E200i) controller on every BTO model server blade (Battery-backed write cache is optional.)
- Redundant ROM on each server blade
- Advanced ECC Memory - can correct a multi-bit error (up to 4 bits) that occurs within one memory chip
- Memory Mirroring
- Memory Online Spare Capacity
- Network adapter teaming (network fault tolerance, transmit load balancing, switch-assisted load balancing)

Industry Standard Compliance

ACPI 2.0 Compliant
PCI 2.2 Compliant
WOL Support
Microsoft® Logo certifications
USB 2.0 Support

Security

- One (1) internal USB 2.0 connector for security key devices and USB drive keys
- Power-on password
- Administrator's password
- Integrated Lights-Out 2 has 12 customizable user accounts and SSL encryption
- Integrated Lights-Out 2 can be disabled via a Global Setting

Factory Express Portfolio for Servers and Storage

HP Factory Express offers configuration, customization, integration and deployment services for HP servers and storage products. Customers can choose how their factory solutions are built, tested, integrated, shipped and deployed.

Factory Express offers service packages for simple configuration, racking, installation, complex configuration and design services as well as individual factory services, such as image loading, asset tagging, and custom packaging. HP products supported through Factory Express include a wide array of servers and storage: HP Integrity, HP ProLiant, HP ProLiant Server Blades, HP BladeSystem, HP 9000 servers as well as the MSAxxxx, VA7xxx, EVA, XP, rackable tape libraries and configurable network switches.

For more information on Factory Express services on your specific server model please contact your sales representative or go to: http://www.hp.com/go/factory-express.

Standard Features

HP Enterprise Configurator	The HP e-Configure Enterprise Configurator now provides factory default racking for our HP hardware portfolio. This approach is aligned with our strategic direction to meet the needs and expectations of our valued customers. If you require "custom" rack configuration, please contact HP's Customer Business Center or an Authorized Partner for assistance. NOTE: This feature is not supported in the NEW Drive-less model which is available through CTO for those who do not utilize internal hard disk drives and attach to SAN.
Service and Support	HP Care Pack services provide total care and support expertise with committed response designed to meet your IT and business needs. The HP Care Pack service for HP ProLiant BL c-Class server blades, cover the server blade and all HP branded hardware options qualified for the server, purchased at the same time or afterwards, internal to the server. To fully capitalize on your HP BladeSystem servers' capabilities requires a service partner who thoroughly understands your server technology and systems environment. HP Services, an industry leader in provision of multi vender support solutions provides a range of support services designed to meet the varying needs of business. Whether an SMB or large global corporation HP has a HP BladeSystem server support offer to help you speedily deploy and maximize system uptime. Recommended Service - Simplify ProLiant solution implementation, maintenance and management. • Support Service - 4-Hour Response Coverage, 3-Year, 24 x 7, Same Business Day • Deployment Service - Installation and Start Up for HP BladeSystem Infrastructure Enhanced Service - Optimize service level to increase IT performance and availability • Support Service - HP Proactive BladeSystem Service, 1-Year • Deployment Service - Enhanced Network Installation and Start-up for HP BladeSystem Switches Installation & Start-Up service for HP BladeSystem Infrastructure plus HP BladeSystem Enhanced Network Installation and Start-UP as per the Customer Description and/or Data Sheet. To be delivered on a scheduled basis 8am-5pm, M-F, excluding HP holidays. For a complete listing of service offerings and information visit: http://www.hp.com/services/bladesystemservices http://www.hp.com/go/proliant/carepack

Models

Quad-Core Models

HP BL460c G5 E5450 2G LP (1P) 501713-B21 HP BL460c G5 L5430 2G LP (1P) 492310-B21	Processor(s) One of the following depending on model	(1) Intel® Xeon® Processor E5450 (3.0 GHz, 1333 FSB, 80W) (1) Intel® Xeon® Processor L5430 (2.66 GHz, 1333 FSB, 50W)
	Cache Memory	2 x 6 MB Level 2 cache (5400 Series)
	Memory	2 GB (2 x 1 GB) PC2-5300, FBD DDR2-667, Low Power
	Network Adapter	Two (2) embedded NC373i Multifunction Gigabit Server Adapters plus one (1) additional 10/100 network adapter dedicated to iLO 2 Management
	Storage Controller	HP Smart Array E200i Controller with 64MB (optional battery-backed write cache)
	Hard Drives	No drives included; (2) SFF SAS/SATA drive bays
	Internal Storage	SAS: 1TB SATA: 500GB
	Optical Drive	None
	Form Factor	Up to 8 half-height blades supported in HP BladeSystem c3000 Enclosure Up to 16 half-height blades supported in HP BladeSystem c7000 Enclosure

NOTE: This section lists some of the steps required to configure a Factory Integrated Model. To ensure only valid configurations are ordered, HP recommends the use of an HP approved configurator. Contact your local sales representative for information on CTO product offerings and requirements.
NOTE: HP does not allow factory integration of options into standard models listed above.
Configure-to-order server blades must start with a CTO Blade.
NOTE: FIO indicates that this option is a Factory Installable Option.

Step 1: Base Server Blade Configuration (Select a configurable Blade)

Models	HP ProLiant BL460c G5 CTO Blade	501715-B21
	Configurable Model ships with:	
	Two (2) embedded NC373i Multifunction Gigabit Server Adapters, Hard Disk Drive Backplane with USB connector, plus one (1) additional 10/100 NIC dedicated to iLO 2 Management	
	Integrated Lights-Out 2 Standard Blade Edition	

Step 2: Choose Required Options (one of the following from each list unless otherwise noted):

Processors	For single processor configuration choose:	
	Quad-Core Processor Option Kits	
	Intel® Xeon® processor E5450 (3.00 GHz, 1333 FSB, 80 W) Option Kit, FIO Base NOTE: If 2 processors are desired, select one 459489-L21 and one 459489-B21.	459489-L21
	Intel® Xeon® processor L5430 (2.66 GHz, 1333 FSB, 50 W) Option Kit, FIO Base NOTE: If 2 processors are desired, select one 493764-L21 and one 493764-B21.	493764-L21
	Intel® Xeon® processor L5420 (2.50 GHz, 1333 FSB, 50 W) Option Kit, FIO Base NOTE: If 2 processors are desired, select one 462876-L21 and one 468876-B21.	462876-L21
Memory	2 GB FBD PC2-5300 (2 x 1 GB LP) Kit	461826-B21
	4 GB FBD PC2-5300 (2 x 2 GB LP) Kit	461828-B21
	8 GB FBD PC2-5300 (2 x 4 GB LP) Kit	466440-B21
	16 GB FBD PC2-5300 (2 x 8 GB) Kit	413015-B21
	64 GB FBD PC2-5300 (8 x 8 GB) Kit	495604-B21
	NOTE: Memory Option Kits described as LP include Low Power DIMMs. For more information on ProLiant Energy Efficient Features, see: http://h18004.www1.hp.com/products/servers/platforms/energyefficient/	
	NOTE: Must be installed in pairs	

Step 3: Choose Additional Factory Integratable Options (one of the following from each list unless otherwise noted):

Controller Cache	64 MB Cache - FIO Only NOTE: Integrated HP Smart Array E200i RAID controller supporting RAID 0/1 Controller cache module selection is required for all blades that support hard disk drives. Select either the standard 64 MB module above or the optional 128 MB module below.	405102-B21
	128 MB Battery-Backed Cache Enabler NOTE: Supports the HP Smart Array E200i Controller.	351580-B21

Step 4: Choose Additional Options for Factory Integration

NOTE: For additional options, please refer to the "Core Options" and "Additional Options" section below. For additional options, including server blade enclosures interconnect options and power subsystem options; please see the options section below; or the following QuickSpecs:
HP BladeSystem c-Class Enclosures QuickSpecs:
HP BladeSystem c3000 Enclosure QuickSpecs:
http://h18000.www1.hp.com/products/quickspecs/12790_div/12790_div.html
HP BladeSystem c7000 Enclosure QuickSpecs:
http://h18000.www1.hp.com/products/quickspecs/12810_div/12810_div.html
and HP BladeSystem c-Class Interconnect Components QuickSpecs:
http://h18000.www1.hp.com/products/quickspecs/12524_div/12524_div.html.

Core Options

Ethernet Mezzanine Options	**Gigabit Ethernet Mezzanines**	
	HP NC325m PCI Express Quad Port 1Gb Server Adapter for c-Class BladeSystem NOTE: If the NC325m is installed in mezzanine slot 1 of a half-height server, connectivity will be provided on 2 of the 4 ports.	416585-B21
	HP NC326m PCI Express Dual Port 1Gb Server Adapter for c-Class BladeSystem	406771-B21
	HP NC360m Dual Port 1GbE BL-c Adapter	445978-B21
	HP NC364m Quad Port 1GbE BL-c Adapter NOTE: If the NC364m is installed in mezzanine slot 1 of a half-height server, connectivity will be provided on only 2 of the 4 ports.	447883-B21
	HP NC382m Dual Port 1GbE Multifunction BL-c Adapter	453246-B21
	NOTE: The Gigabit Ethernet adapters above transmit from the server at 2000 Mbps, full duplex per port only. For more information, see the "Network Controller" segment in the Standards Features section.	
	10 Gigabit Ethernet Mezzanines	
	HP 10GbE Dual Port Mezzanine Adapter	516936-B21
	HP NC532m Dual Port 10GbE BL-c Adapter NOTE: The NC532m network adapter card is required for each server blade connecting to a 10Gb interconnect in bays 3-8 (HP BladeSystem c7000 Enclosure) or bays 3-4 (HP BladeSystem c3000 Enclosure). NOTE: The NC532m requires a minimum of 2 GB of server memory. NOTE: The NC532m will downspeed to 1Gb if paired with a 1Gb interconnect.	467799-B21
	HP 10 GbE Dual Port Mezzanine Adapter	516936-B21
	QLogic QMH4062 1Gb E iSCSI Adapter for HP BladeSystem c-Class	488074-B21
Fiber Channel Mezzanine Options	Emulex LPe1105 FC Dual Channel 4Gb, PCI-E-to-Fibre Channel Host Bus Adapter	403621-B21
	QLogic QMH2462 4Gb FC HBA for HP c-Class BladeSystem	403619-B21
Processors	**Quad-Core Process Option Kits**	
	Intel® Xeon® processor E5450 (3.00GHz 1333 FSB, 80 W)	459489-B21
	Intel® Xeon® processor L5430 (2.66 GHz, 1333 FSB, 50 W)	493764-B21
	Intel® Xeon® processor L5420 (2.50 GHz, 1333 FSB, 50 W)	462876-B21
Memory	2 GB FBD PC2-5300 (2 x 1 GB) Low Power Kit	461826-B21
	4 GB FBD PC2-5300 (2 x 2 GB) Low Power Kit	461828-B21
	8 GB FBD PC2-5300 (2 x 4 GB) Low Power Kit	466440-B21
	16 GB FBD PC2-5300 (2 x 8 GB) Kit	413015-B21
	64 GB FBD PC2-5300 (8 x 8 GB) Kit	495604-B21
	NOTE: Memory Option Kits described as LP include Low Power DIMMs. For more information on ProLiant Energy Efficient Features, see: http://h18004.www1.hp.com/products/servers/platforms/energyefficient/	
	NOTE: Must be installed in pairs.	

Core Options

Hard Drives	NOTE: Hard drives have either a one year or three year warranty; refer to the specific hard drive QuickSpecs for details.	
	SAS Hot Plug SFF Enterprise (ENT) Drives	
	HP 300GB 6G SAS 10K SFF DP ENT HDD	507127-B21
	HP 300GB 3G SAS 10K SFF DP HDD	492620-B21
	HP 146GB 6G SAS 15K SFF DP ENT HDD	512547-B21
	HP 146GB 3G SAS 10K SFF DP HDD	418367-B21
	HP 72GB 6G SAS 15K SFF DP ENT HDD	512545-B21
	HP 72GB 3G SAS 15K SFF DP HDD	418371-B21
	HP 72GB 3G SAS 10K SFF DP HDD	384842-B21
	SAS Hot Plug SFF Midline (MDL) Drives	
	HP 500GB 6G SAS 7.2K SFF DP MDL HDD	507610-B21
	NOTE: Please see QuickSpecs for Technical Specifications and additional information: http://h18000.www1.hp.com/products/quickspecs/12244_div/12244_div.html (Worldwide)	
	NOTE: The hard drive options are not required when configuring a Drive-less Model.	
	SATA SFF Hot Plug Entry (ETY) Drives	
	HP 250GB 3G SATA 5.4K SFF ETY HDD	460355-B21
	HP 120GB 1.5G SATA 5.4K SFF ETY HDD	458924-B21
	NOTE: Please see the QuickSpecs for Technical Specifications and additional information: http://h18000.www1.hp.com/products/quickspecs/13021_div/13021_div.html (Worldwide)	

HP Insight Software	NOTE: Electronic licensing options are available for select Insight Software products. Please see the appropriate Insight Software QuickSpecs for additional information.	
	HP Insight Control suite	
	HP Insight Control suite, No Media 1-Server License including 1 year of 24x7 Technical Support and Updates NOTE: Customer will receive a printed license entitlement certificate and documentation via physical shipment. The license entitlement certificate must be redeemed online or via fax in order to obtain the license activation key(s).	452148-B22
	NOTE: For additional license kits please see the Insight Control QuickSpecs at: http://h18000.www1.hp.com/products/quickspecs/12631_div/12631_div.html	
	HP Insight Software Media Kit NOTE: Insight Software DVD media without licenses. Contains Insight Software suites, standalone software products and components licensed by Insight Control suites. Uses an integrated installer to perform quick and accurate software installation and updates.	436222-B21
	HP Insight Control suite for Linux	
	HP Insight Control suite for Linux, No Media, 1-Server license, including one year of 24x7 Technical Support and Updates NOTE: This part number can be used to purchase one (1) license with a single activation key. Customer will receive a printed license entitlement certificate via physical shipment. The license entitlement certificate must be redeemed online or via fax in order to obtain the license activation key(s). Includes one year of 24 x 7 HP Software Technical Support and Update Service. NOTE: One certificate is shipped for each license.	464423-B22
	HP Insight Control suite for Linux, Media pack (DVD) - No licenses included NOTE: This optional Media pack DVD contains HP Insight Control suite for Linux, HP System Insight Manager, HP Insight Power Manager software, HP Insight Virtual Machine Manager software, and an integrated installer. Servers must be acquired separately. NOTE: This Media pack is optional because the latest ISO image and latest updates may be downloaded at no cost from: http://www.hp.com/go/ice-linux (click on Download button).	464422-B22
	NOTE: For additional License kits and Electronic licensing options, please see the Insight Control for Linux QuickSpecs at: http://h18000.www1.hp.com/products/quickspecs/13019_div/13019_div.html	
	HP iLO Advanced for BladeSystem	
	HP Integrated Lights-Out Advanced for BladeSystem, No Media, 1-Server License, including 1 year of 24x7 Technical Support and Updates NOTE: This license allows 1 server to be managed via HP iLO Advanced for BladeSystem. Customer will receive a printed license entitlement certificate via physical shipment. The license entitlement certificate must be redeemed online or via fax in order to obtain the license activation key(s). Includes one year of 24 x 7 HP Software Technical Support Service.	512488-B21
	NOTE: For additional license kits, including electronic delivery options, please see the HP ProLiant Onboard Administrator (OA), powered by the Integrated Lights-Out 2 QuickSpecs at: http://h18000.www1.hp.com/products/quickspecs/12362_div/12362_div.html	
	HP Insight Rapid Deployment software	

Additional Options

	HP Insight Rapid Deployment software, No Media 1-Server License including 1 year of 24x7 Technical Support and Updates NOTE: This license allows 1 server to be deployed. Customer will receive a printed license entitlement certificate via physical shipment. The license entitlement certificate must be redeemed online or via fax in order to obtain the license activation key(s). Includes one year of 24 x 7 HP Software Technical Support Service. NOTE: For additional license kits including electronic delivery options, please see the Insight Rapid Deployment software QuickSpecs at: http://h18000.www1.hp.com/products/quickspecs/11053_div/11053_div.html	452151-B21
Storage Controllers	HP Smart Array P700M/512 Controller	508226-B21
	HP Smart Array P700M/256 Controller	507925-B21
	NOTE: Please see the QuickSpecs for Technical Specifications and additional information: http://h18000.www1.hp.com/products/quickspecs/13175_div/13175_div.html (Worldwide)	
Controller Cache	128MB Battery-Backed Cache Enabler NOTE: Supports the HP Smart Array E200i Controller. NOTE: This option is not required when configuring a Drive-less Model.	351580-B21
I/O Accelerator Mezzanine Options	HP StorageWorks 80GB IO Accelerator for BladeSystem c-Class	AJ876A
	HP StorageWorks 160GB IO Accelerator for BladeSystem c-Class	AJ877A
	HP StorageWorks 320GB IO Accelerator for BladeSystem c-Class	AJ878A
	NOTE: Please see the QuickSpecs for Technical Specifications and additional information: http://h18000.www1.hp.com/products/quickspecs/13175_div/13175_div.html	
HP InfiniBand Mezzanine Options	HP 4X DDR IB Dual Port Mezzanine HCA for HP BladeSystem c-Class	448262-B21
	HP 4X DDR IB Mezzanine HCA for HP BladeSystem c-Class	410533-B21
HP c-Class Tape Blades	HP StorageWorks SB920c Tape Blade NOTE: LTO-3 Ultrium technology.	AJ401A
	HP StorageWorks Ultrium 448c Tape Blade NOTE: LTO-2 Ultrium technology.	440947-B21
	NOTE: The HP PCI Express Mezzanine Pass-Thru Card for HP BladeSystem (431643-B21) is required when installing a tape blade adjacent to a full-height server blade. NOTE: Please see the QuickSpecs for Technical Specifications and additional information: http://h18000.www1.hp.com/products/quickspecs/12729_div/12729_div.html	

Additional Options

HP StorageWorks SB40c Storage Blade	HP StorageWorks SB40c Storage Blade NOTE: Please see the QuickSpecs for Technical Specifications and additional information: http://h18000.www1.hp.com/products/quickspecs/12587_div/12587_div.html (Worldwide)	411243-B21
HP PCI Expansion Blade	HP PCI Expansion Blade NOTE: Ships with one pre-installed PCI-X connect board. Also includes one PCIe connect board which requires installation. NOTE: Please see the QuickSpecs for Technical Specifications and additional information: http://h18000.www1.hp.com/products/quickspecs/12753_div/12753_div.html	448018-B21
USB Options	HP USB 2-Button Optical Scroll Mouse (Carbonite/Silver)	DC172B
	HP 1GB USB 2.0 Floppy Drive Key	442085-B21
	Multibay II 9.5mm DVD Drive	PA849A
	2004 Standard Keyboard USB	DT528A#xxx
	1.44MB External USB Floppy Drive	DC141B
Service and Support Offerings (HP Care Pack Services)	NOTE: The HP Care Pack service part numbers below for ProLiant BL c-Class server blades, cover the server blade and all HP branded hardware options qualified for the server, purchased at the same time or afterwards, internal to the server.	
	Hardware Services On-site Service	
	4-Hour On-site Service, 5-Day x 13-Hour Coverage, 3 Years, Electronic	UK065E
	4-Hour On-site Service, 7-Day x 24-Hour Coverage, 3 Years, Electronic	UK066E
	6-Hour Call to Repair, On-site Service, 7-Day x 24-Hour Coverage, 3 Years, Electronic	UK067E
	Support Plus 24	
	Onsite HW support 24x7, 4hr response and Microsoft O/S SW Tech support offsite, onsite at HP's discretion, 24x7 2hr response time incl. HP holidays, Electronic	UE473E

Memory

NOTE: Memory configurations listed do not apply to "Factory Integrated Models".

DIMM installation guidelines:

1. All DIMMs must be PC2-5300 Fully Buffered DIMMs at 667 MHz.
2. Both DIMM slots in a memory bank must be populated.
3. Banks must be populated in sequential alphabetic order, starting with bank A.
4. Both DIMMs in a memory bank must be identical. Install identical DIMMs as pairs only, starting with DIMM socket 1, bank A.
5. Multiple advanced memory protection (AMP) modes are supported, based on FBDIMM population and RBSU selection. The server blade defaults to Advanced ECC

HP ProLiant BL460c G5 Server Blade (1P Model)

Standard Memory

2048 MB (2 x 1024 MB) of PC2-5300, FBD DDR2-667 ECC DIMMs

Standard Memory Plus Optional Memory

Up to 51200 MB (depending on model) of PC2-5300, FBD DDR2-667 ECC DIMMs. Memory is available with the installation of optional PC2-5300, FBD DDR2-667 DIMM memory expansion kits.

Standard Memory Replaced with Optional Memory

Up to 65536 MB of PC2-5300, FBD DDR2 FBD-667 ECC DIMMs. Memory is available with removal of standard and the installation of optional PC2-5300, FBD DDR2-667 DIMM memory expansion kits.

Memory		Slot							
		1A	2C	3A	4C	5B	6D	7B	8D
Standard	2048 MB	1024 MB	Empty	1024 MB	Empty	Empty	Empty	Empty	Empty
Optional	51200 MB	1024 MB	8192 MB	1024 MB	8192 MB	8192 MB	8192 MB	8192 MB	8192 MB
Maximum	65536 MB	8192 MB	8192 MB	8192 MB	8192 MB	8192 MB	8192 MB	8192 MB	8192 MB

Following are memory options available from HP:

2 GB FBD PC2-5300 (2 x 1 GB LP) Kit	461826-B21
4 GB FBD PC2-5300 (2 x 2 GB LP) Kit	461828-B21
8 GB FBD PC2-5300 (2 x 4 GB LP) Kit	466440-B21
16 GB FBD PC2-5300 (2 x 8 GB) Kit	413015-B21
64 GB FBD PC2-5300 (8 x 8 GB) Kit	495604-B21

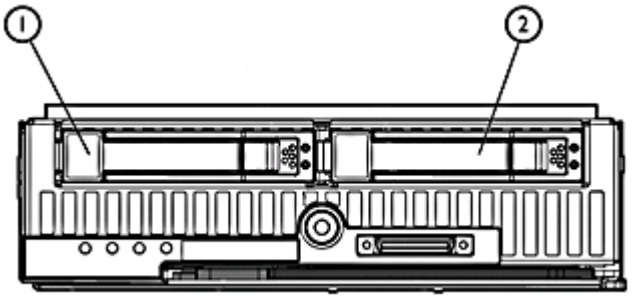

1-2 2 x SFF SAS or SATA Hot Plug Hard Drives

Hard Drives

SAS Hot Plug SFF Midline (MDL) Drives

NOTE: Hard drives have either a one year or three year warranty; refer to the specific hard drive QuickSpecs for details.

	Quantity Supported	Position Supported	Controller
500GB 6G SAS 7.2K DP	2	1-3	HP Smart Array E200i Controller

SAS Hot Plug SFF Enterprise (ENT) Drives

	Quantity Supported	Position Supported	Controller
00GB 6G 10K 300GB 3G SAS 10K 146GB 6G 10K 146GB 3G SAS 10K 72GB 6G 15K 72GB 3G SAS 15K 72GB 3G SAS 10K	2	1-2	HP Smart Array E200i Controller

SATA SFF Hot Plug Entry (ETY) Drives

	Quantity Supported	Position Supported	Controller
250GB 3G SATA 5.4K 120GB 1.5 G SATA 5.4K	2	1-2	HP Smart Array E200i Controller

NOTE: This option is not supported or available within the Drive-less CTO Model.

Storage

External Storage

	Quantity Supported	Position Supported	Host Controller or Adapter
XP Disk Array Systems	Please see the XP Disk Array Systems QuickSpecs below to determine configuration requirements	External	Please see the XP Disk Array Systems Quick Specs for the latest list of supported HBAs
HP StorageWorks XP10000 Disk Array: http://h18006.www1.hp.com/products/storageworks/xp10000/index.html (Worldwide)			
Enterprise Virtual Array Systems	Please see the XP Disk Array Systems QuickSpecs below to determine configuration requirements	External	Please see the XP Disk Array Systems Quick Specs for the latest list of supported HBAs
HP StorageWorks Enterprise Virtual Array Family: http://h18006.www1.hp.com/products/quickspecs/12408_div/12408_div.html (Worldwide)			

System Unit	**Dimensions** (H x W x D) (with bezel)	7.154 x 2.19 x 20.058 in (18.17 x 5.56 x 50.95 cm)	
	Weight (approximate)	Maximum (all hard drives and processors installed)	14.20 lb (6.44 kg)
		Minimum (one hard drive and processor installed)	10.75 lb (4.87 kg)
	Power Specifications	For power specifications including Input Requirements, BTU Rating, and Power Supply Output, please see the HP BladeSystem c-Class Enclosures QuickSpecs located at URL: HP BladeSystem c3000 Enclosure QuickSpecs: http://h18000.www1.hp.com/products/quickspecs/12790_div/12790_div.html HP BladeSystem c7000 Enclosure QuickSpecs: http://h18000.www1.hp.com/products/quickspecs/12810_div/12810_div.html To review typical system power ratings use the HP BladeSystem Power Sizer which is available via the online tool located at URL: http://www.hp.com/go/bladesystem/powercalculator	
	System Inlet Temperature	Operating	10° to 35°C (50° to 95°F) at sea level with an altitude derating of 1.0°C per every 305 m (1.8°F per every 1000 ft) above sea level to a maximum of 3050 m (10,000 ft), no direct sustained sunlight. Maximum rate of change is 10°C/hr (18°F/hr). The upper limit may be limited by the type and number of options installed. System performance may be reduced if operating with a fan fault or above 30°C (86°F).
		Non-operating	-30° to 60°C (-22° to 140°F). Maximum rate of change is 20°C/hr (36°F/hr).
	Relative Humidity (non-condensing)	Operating	10 to 90% relative humidity (Rh), 28°C (82.4°F) maximum wet bulb temperature, non-condensing.
		Non-operating	5 to 95% relative humidity (Rh), 38.7°C (101.7°F) maximum wet bulb temperature, non-condensing.
	Altitude	Operating	3050 m (10,000 ft). This value may be limited by the type and number of options installed. Maximum allowable altitude change rate is 457 m/min (1500 ft/min).
		Non-operating	9144 m (30,000 ft). Maximum allowable altitude change rate is 457 m/min (1500 ft/min).
	Acoustic Noise	For acoustic noise specifications, please see the HP BladeSystem c-Class Enclosures QuickSpecs located at URL:	

HP BladeSystem c3000 Enclosure QuickSpecs:
http://h18000.www1.hp.com/products/quickspecs/12790_div/12790_div.html
HP BladeSystem c7000 Enclosure QuickSpecs:
http://h18000.www1.hp.com/products/quickspecs/12810_div/12810_div.html

HP Smart Array E200i Controller	Disk Drive and Enclosure Interface	3G SAS (Serial Attached SCSI) 1.5G SATA (Serial Advanced Technology Attachment)
	Cache Memory Speed	DDR-1/266 MHz provides up to 4.2 GB/s maximum bandwidth.
	Server Interface	x4 2.5G PCIe provides 2GB/s maximum bandwidth.
	SAS Speed	x2 3G SAS provides 600MB/s maximum bandwidth.
	Cache Memory	40-bit 64 MB or 128 MB cache: ECC protection, battery-backed, and transportable
	Logical Drives Supported	Up to 32 logical volumes
	Maximum Logical Drive Capacity	1TBGB (2 x 500GB)
	Host Memory Addressing	64-bit, supporting greater than 4GB server memory space
	RAID Support	RAID 5 (Distributed Data Guarding) requires 128MB BBWC option RAID1, 1+0 (Striping & Mirroring) RAID 0 (Striping)
	Upgradeable Firmware	Upgradeable Firmware

Embedded NC373i Multifunction Gigabit Server Adapter	Network Processor	Broadcom 5708S
	Data Transfer Method	Four lane (x4) PCI Express
	Network Transfer Rate	2000 Mb/s full duplex (theoretical maximum value) NOTE: The Gigabit Ethernet adapters above transmit from the server at 2000 Mbps, full duplex per port only. For more information, see the "Network Controller" segment in the Standards Features section.
	IEEE Compliance	802.1p, 802.1Q, 802.3, 802.3ad, and 802.3x
	Standard Features	• TCP/IP offload engine (TOE) for Microsoft Windows 2003 • iSCSI Boot for Linux • Optional accelerated iSCSI • 9K jumbo frames • TCP/IP checksum offload (TCO) • Large send offload (LSO) • Interrupt coalescence • Dual address cycles (DAC) • Wake-on-LAN (WOL) • Pre-boot execution environment (PXE) • ProLiant Teaming including Network Fault Tolerance, Transmit Load Balancing, and Switch-Assisted Load Balancing • IPv6 packet transmit and receive (excluding all offload capabilities); IPv6 aware SNMPv1 agents for Microsoft Windows

Environment-friendly Products and Approach	End-of-life Management and Recycling	Hewlett-Packard offers end-of-life HP product return, trade-in, and recycling programs in many geographic areas. For trade-in information, please go to: http://www.hp.com/go/green. To recycle your product, please go to: http://www.hp.com/go/green or contact your nearest HP sales office. Products returned to HP will be recycled, recovered or disposed of in a responsible manner. The EU WEEE directive (2002/95/EC) requires manufacturers to provide treatment information for each product type for use by treatment facilities. This information (product disassembly instructions) is posted on the Hewlett Packard web site at: http://www.hp.com/go/green. These instructions may be used by recyclers and other WEEE treatment facilities as well as HP OEM customers who integrate and re-sell HP equipment.

© Copyright 2009 Hewlett-Packard Development Company, L.P.

The information contained herein is subject to change without notice.

Microsoft and Windows NT are US registered trademarks of Microsoft Corporation. Intel, the Intel logo, Xeon and Xeon Inside are trademarks of Intel Corporation in the U.S. and other countries.

The only warranties for HP products and services are set forth in the express warranty statements accompanying such products and services. Nothing herein should be construed as constituting an additional warranty. HP shall not be liable for technical or editorial errors or omissions contained herein.

For hard drives, 1GB = 1 billion bytes. Actual formatted capacity is less.