Overview

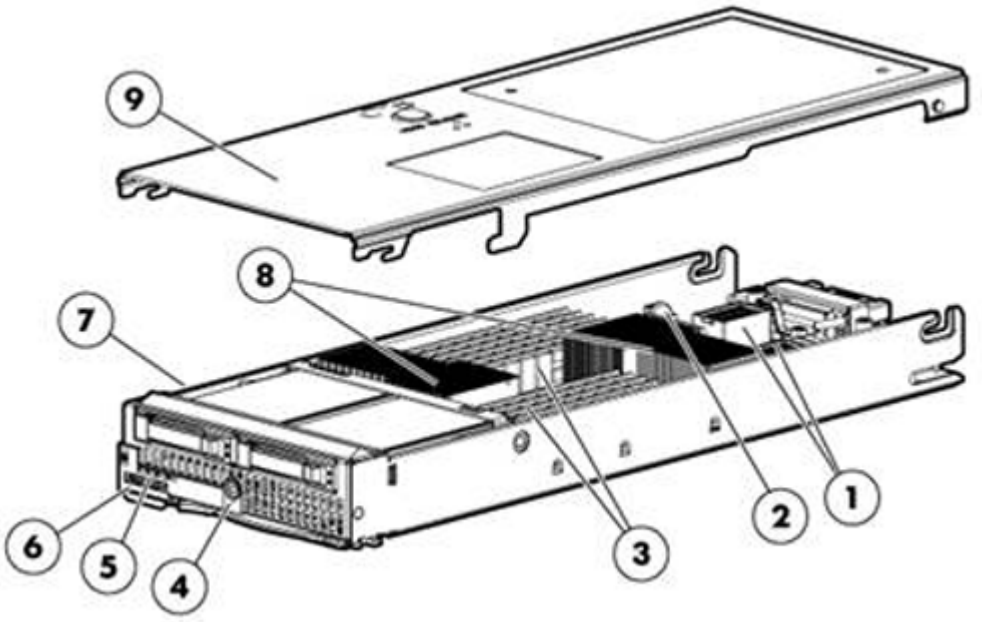

HP ProLiant BL460c G6 Server Blade

1. Two (2) mezzanine I/O expansion slots
2. Internal USB connector
3. Twelve (12) DDR3 Registered or Unbuffered DIMM Memory Slots
4. HP Smart Array P410i Controller
5. Two (2) small form factor (SFF) hot-plug drive bays
6. Local I/O Connector
7. Internal SD card slot
8. Up to two (2) Intel® Xeon® 5500 or 5600 series processors
9. Access Panel

What's New

- Support for HP 900GB 6G SAS 10K SFF (2.5-inch) Enterprise 3yr Warranty Hard Drive

At A Glance

This document covers the HP ProLiant BL460c G6 server blade only. For more information on HP BladeSystems c-Class Enclosures and HP BladeSystem c-Class Interconnect and Mezzanine Components, please see the following:

HP BladeSystem c-Class Enclosures QuickSpecs:
HP BladeSystem c3000 Enclosure QuickSpecs:
http://h18000.www1.hp.com/products/quickspecs/12790_div/12790_div.html

HP BladeSystem c7000 Enclosure QuickSpecs:
http://h18000.www1.hp.com/products/quickspecs/12810_div/12810_div.html

HP BladeSystem c-Class Interconnect and Mezzanine Components:

Overview

http://h18004.www1.hp.com/products/blades/components/c-class-interconnects.html
http://h18004.www1.hp.com/products/blades/components/c-class-adapters.html

The HP ProLiant BL460c G6 provides greater 2P x86 server blade density without compromise and maximum power-efficiency with flexibility and choice.

HP ProLiant BL460c G6 server blade includes:

- Processor:
  - Up to two (2) Intel® Xeon® 5500 or 5600 Series processors, up to 2.93GHz
  - Intel® 5500 Chipset
- Memory:
  - Twelve (12) DIMM slots
  - Up to 192GB, using PC3-8500 DDR3 Registered (RDIMM) memory, operating at 800MHz when fully populated at 2 DIMMs per Channel in 12 slots
  - Up to 48GB, using PC3-10600 DDR3 Unbuffered (UDIMM) memory, operating at 1333MHz when fully populated at 2 DIMMs per Channel in 12 slots
- Storage Controller:
  - HP Smart Array P410i Controller (RAID 0/1)
- Internal Drive Support:
  - Up to two (2) small form factor (SFF) SAS or SATA hot plug hard disk drives or SATA solid state drives
- Network Controller:
  - Embedded NC532i Dual Port Flex-10 10GbE Multifunction Server Adapter
    NOTE: Flex-10 capability requires the use of an HP Virtual Connect Flex-10 10Gb Ethernet module. Learn more at: www.hp.com/go/virtualconnect.
    NOTE: Each port is autosensing 1 Gb/10Gb, and can interoperate with 1Gb HP BladeSystem c-Class interconnect components.
  - One (1) additional 10/100 server adapter dedicated to iLO 2 Management
- Mezzanine Support:
  - Two (2) I/O expansion mezzanine slots
  - Supports up to two (2) mezzanine cards
    - Dual-Port FlexFabric Adapter mezzanine option
    - Dual-Port Fibre Channel Mezzanine options for SAN connectivity (Choice of Emulex, QLogic or Brocade)
    - iSCSI Ethernet mezzanine option for optimized iSCSI connectivity
    - Ethernet server adapter mezzanine options for additional network ports
    - 4X QDR (40Gbps) and DDR (20Gbps) InfiniBand (IB) Mezzanine options for low latency and high bandwidth server interconnectivity
    - I/O Accelerator mezzanine options for high transaction rate local storage
    - SAS mezzanine option for external direct attach and shared SAS storage
- Ports:
  - One (1) internal USB 2.0 connector for security key devices and USB drive keys
  - One (1) internal SD-HC Card slot
- Security - Trusted Platform Module:
  - One (1) internal TPM 1.2 module connector
- Form Factor:
  - HP ProLiant BL460c G6 is a half-height server blade that plugs into the HP BladeSystem c3000 and c7000 enclosures
- Infrastructure Management:
  - This server blade requires the latest version of the Onboard Administrator firmware. This firmware release may also require other subsystem firmware upgrades. For information on the latest firmware versions, please see the Blades Firmware Maintenance website at: http://h18004.www1.hp.com/products/blades/components/c-class-compmatrix.html
  - HP Integrated Lights-Out 2 (iLO 2) management processor for simplified server setup, health monitoring and recovery,

power and thermal control, and lights-out remote administration.

- HP Insight Control, a product option, delivers essential infrastructure management that can help save time and money by making it easy to deploy, migrate, monitor, control and optimize your IT infrastructure through a single, simple management console. Insight Control supports both Windows and Linux-based central management servers.
- HP Insight Dynamics for ProLiant, a product option, is an integrated command center that enables IT Staff personnel to continuously analyze and optimize a converged infrastructure, while automating and reducing the cost of common data center tasks by as much as 40 percent. This ultimately enables them to dynamically keep pace with the organization's changing business requirements.

- Operating Systems and Virtualization Software:
  - Supports Windows, RHEL, SLES, Solaris, NetWare, VMware, and Citrix XenServer
    NOTE: NetWare is not supported with Intel Xeon 5600 series processors.
- Enclosures:
  - HP offers two different c-Class server blade enclosures to meet your individual needs:
    - The HP BladeSystem c7000 rack enclosure is 10U high and holds up to sixteen (16) ProLiant BL460c G6 servers plugged vertically.
    - The HP BladeSystem c3000 rack enclosure is 6U high and holds up to eight (8) HP ProLiant BL460c G6 servers plugged horizontally.
  - Server blades, storage blades, interconnect modules, power supplies, fans, and redundant Onboard Administrator modules are all designed to fit into the c3000 and c7000 enclosures.
- For additional enclosure information, please see: http://h18004.www1.hp.com/products/blades/components/enclosures/c-class/index.html.
- Warranty:
  - This product is covered by a global limited warranty and supported by HP Services and a worldwide network of HP Authorized Channel Partners. Hardware diagnostic support and repair is available for three years from date of purchase. Support for software and initial setup is available for 90 days from date of purchase. Enhancements to warranty services are available through HP Care Pack services or customized service agreements. Certain restrictions and exclusions apply. Hard drives have either a one year or three year warranty; refer to specific hard drive QuickSpecs for details.
    NOTE: Server warranty includes 3 year Parts, 3 year Labor, 3-year on-site support. Warranty repairs may be accomplished through the use of Customer Self Repair (CSR) parts. These parts fall into two categories: 1) Mandatory CSR parts are designed for easy replacement. A travel and labor charge will result when customers decline to replace a Mandatory CSR part; 2) Optional CSR parts are also designed for easy replacement but may involve added complexity. Customers may choose to have HP replace Optional CSR parts at no charge. Additional information regarding worldwide limited warranty and technical support is available at:
    http://h18004.www1.hp.com/products/servers/platforms/warranty/index.html

Standard Features

NOTE: For the Standard Features shipped in the "Factory Integrated Models", please see the "Configuration Information - Factory Integrated Models" section.

Processor One of the following depending on Model	Six-Core Processors Intel® Xeon® X5670 (2.93GHz/6-core/12MB/95W, DDR3-1333, HT, Turbo 2/2/2/2/3/3) Processor Intel® Xeon® X5650 (2.66GHz/6-core/12MB/95W, DDR3-1333, HT, Turbo 2/2/2/2/3/3) Processor Intel® Xeon® L5640 (2.26GHz/6-core/12MB/60W, DDR3-1333, HT, Turbo 2/2/3/3/4/4) Processor Quad-Core Processors Intel® Xeon® X5570 (2.93GHz/4-core/8MB/95W, DDR3-1333, HT, Turbo 2/2/3/3) Processor Intel® Xeon® X5560 (2.80GHz/4-core/8MB/95W, DDR3-1333, HT, Turbo 2/2/3/3) Processor Intel® Xeon® X5550 (2.66GHz/4-core/8MB/95W, DDR3-1333, HT, Turbo 2/2/3/3) Processor Intel® Xeon® E5640 (2.66GHz/4-core/12MB/80W, DDR3-1066, HT, Turbo 1/1/2/2) Processor Intel® Xeon® E5540 (2.53GHz/4-core/8MB/80W, DDR3-1066, HT, Turbo 1/1/2/2) Processor Intel® Xeon® E5530 (2.40GHz/4-core/8MB/80W, DDR3-1066, HT, Turbo 1/1/2/2) Processor Intel® Xeon® E5520 (2.26GHz/4-core/8MB/80W, DDR3-1066, HT, Turbo 1/1/2/2) Processor Intel® Xeon® E5506 (2.13GHz/4-core/4MB/80W, DDR3-800) Processor Intel® Xeon® E5504 (2.0GHz/4-core/4MB/80W, DDR3-800) Processor Intel® Xeon® L5530 (2.40GHz/4-core/8MB/60W, DDR3-1066, HT, Turbo 1/1/2/2) Processor Intel® Xeon® L5520 (2.26GHz/4-core/8MB/60W, DDR3-1066, HT, Turbo 1/1/2/2) Processor Intel® Xeon® L5506 (2.13GHz/4-core/4MB/60W, DDR3-800) Processor Dual-Core Processors Intel® Xeon® E5502 (1.86GHz/2-core/4MB/80W, DDR3-800) Processor NOTE: HT indicates that the processor model supports Intel® Hyper-Threading Technology. NOTE: Turbo indicates the maximum potential frequency increment when using Intel® Turbo Boost Technology, with 4, 3, 2, and 1 cores active (on 5500 series processors), or with 6, 5, 4, 3, 2, and 1 cores active (on 5600 series processors). NOTE: DDR3 speed is the maximum memory speed of the processor. Actual memory speed may depend on the quantity and type of DIMMs installed. NOTE: For the Intel 5500 and 5600 Series, the letter preceding the model number indicates the performance/wattage of the processor. "X" denotes High Performance/Wattage; "E" denotes Enterprise Performance/Wattage (Mainstream); and "L" denotes Lower Wattage.
Upgradeability	Upgradeable to two (2) processors
Cache Memory One of the following depending on Model	4MB shared L3 cache 8MB shared L3 cache 12MB shared L3 cache
Chipset	Intel® 5500 Chipset

Standard Features

Memory

Type	DDR3 Registered (RDIMM) or Unbuffered (UDIMM)
Standard	6 GB (3 x 2GB) RDIMM
Maximum(RDIMM)	192GB (12 x 16 GB) for Registered Memory configurations
Maximum (UDIMM)	48 GB (12 x 4 GB) for Unbuffered Memory configurations

NOTE: Depending on the memory configuration and processor model the memory speed may run at 1333MHz, 1066MHz or 800MHz. Please see the Online Memory Configuration Tool for details: www.hp.com/go/ddr3memory-configurator

DDR3 memory options part number decoder

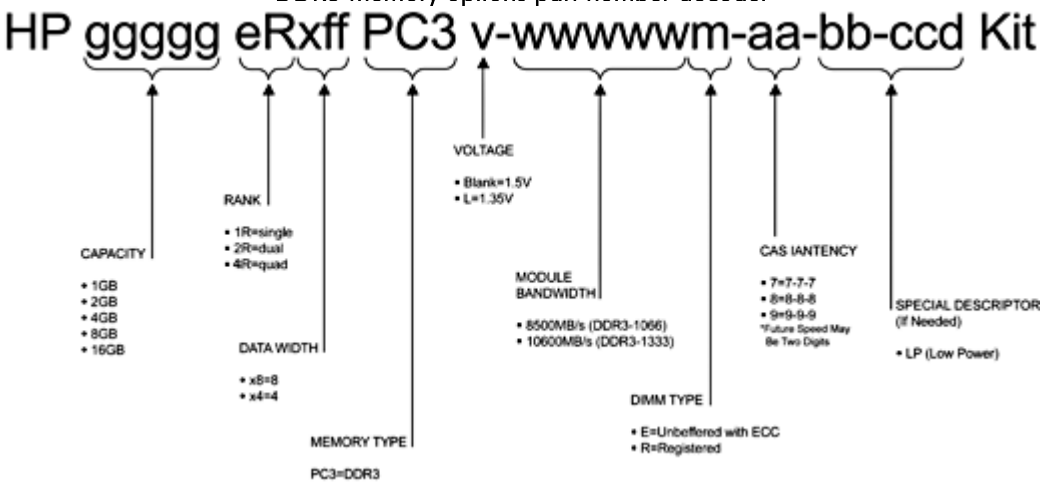

Network Controller

Embedded NC532i Dual Port Flex-10 10GbE Multifunction Server Adapter

NOTE: Flex-10 capability requires the use of an HP Virtual Connect Flex-10 10Gb Ethernet module. Learn more at: www.hp.com/go/virtualconnect.

NOTE: The iSCSI offload feature of the embedded multifunction adapter requires the HP Accelerated iSCSI Pack. For more information, please see the QuickSpecs at: http://h18000.www1.hp.com/products/quickspecs/12466_div/12466_div.html

One (1) additional 10/100 NIC dedicated to iLO 2 Management

I/O Expansion Slots

Two (2) I/O expansion mezzanine slots (x8 PCI Express)

Integrated Manageability

HP Integrated Lights-Out 2 (iLO 2) management processor

Storage Controller

Type HP Smart Array P410i Controller (RAID 0/1)

Available Options: 256MB cache, Battery-Backed Write Cache (BBWC) module for 256MB cache, 512MB cache with Battery Backed Write Cache (BBWC), 1G and 512MB Flash Backed Write Cache (FBWC), and Smart Array Advanced Pack.

NOTE: Supports two (2) Small Form Factor (SFF) Hot Plug drive bays.

Standard Features

Maximum Internal Storage One of the following depending on Model	Hot Plug SAS	2TB	2 x 1TB Serial SCSI
	Hot Plug SATA	2TB	2 x 1TB Serial ATA
	Hot Plug SATA SSD	240GB	2 x 120GB Serial ATA SSD

Graphics

Integrated ATI RN-50, 64 MB video memory

Resolution Color Depths	1600 x 1200, 64K, 256, 16 1280 x 1024, 16.7M, 64k, 256, 16 1024 x 768, 16.7M, 64k, 256,16 800 x 600, 16.7M, 64k, 256, 16 640 x 480, 16.7M, 64k, 256, 16

NOTE: Maximum resolution available via HP Integrated Lights-Out 2 (iLO 2) remote console is 1280 x 1024.

Fibre Channel Support

Two (2) optional Fibre Channel HBAs are supported by the HP ProLiant BL460c G6. Both mezzanine circuit boards connect directly to the server blade system board. These Fibre Channel HBAs are available via option kits and must be ordered separately.

HBA mezzanine card option kits:

Emulex LPe1105 4Gb Fibre Channel Host Bus Adapter for c-Class BladeSystem
(PN 403621-B21)

- Based on the same field-proven ASIC, firmware, and driver technology as Emulex's renowned LPe1150 HBA, the Emulex LPe1105-HP is fully driver compatible with all Emulex HBAs

Emulex LPe1205 8Gb Fibre Channel Host Bus Adapter for c-Class BladeSystem
(PN 456972-B21)

- Exceptional performance, enhanced security, and scalable management for virtual server and enterprise-class applications

QLogic QMH2462 4Gb Fibre Channel Host Bus Adapter for c-Class BladeSystem
(PN 403619-B21)

- Uses common drivers which means that customers can standardize on one QLogic driver whether they are using the QMH2462 or other HBAs powered by QLogic

QLogic QMH2562 8Gb Fibre Channel Host Bus Adapter for c-Class BladeSystem
(PN 451871-B21)

- Provides a first step into the 8Gb future, advanced, embedded support for virtualized environments and reduced power consumption

HP BLc Brocade 804 8Gb Fibre Channel Host Bus Adapter
(PN 590647-B21)

- Application oriented Quality of Service (AQoS) providing the ability to configure, prioritize, and optimize traffic flows from virtual machines and/or applications to the target port

Brocade, Emulex and QLogic Fibre Channel HBAs for HP BladeSystem c-Class feature:

Standard Features

- Optimal performance utilizing PCI Express
- 4/2/1Gb/s auto negotiating speeds (4Gb HBAs)
- 8/4/2Gb/s auto negotiation speeds (8Gb HBAs)
- Dual-ports for redundant path connections
- Up to two FC HBAs per server blade providing redundant FC HBA support
- Optimized for HP Storage products and supported by third party SAN vendors
- Support for Microsoft® Windows® and Linux operating system environments

Compatible SAN

HP ProLiant BL460c G6 server blades are optimized for HP MSA, EVA and XP.

HP ProLiant BL460c G6 server blades are compatible with select 3rd party SANs (please see blade storage page for more details: http://h18004.www1.hp.com/products/blades/components/c-class-sans.html

HP Virtual Connect

HP Virtual Connect in an interconnect option for BladeSystem c-Class that simplifies server connectivity to data and storage networks, and reduces costs. Unique HP Flex-10 and FlexFabric technologies make maximum use of network bandwidths, provide dynamic tuning and enable extreme flexibility to meet individual server and infrastructure requirements. HP Virtual Connect Enterprise Manager (VCEM) provides a central console to administer network connections and workloads for thousands of servers. For more information on Virtual Connect Ethernet, Fibre Channel, Converged Network and management options see: www.hp.com/go/virtualconnect

HP Insight management software

HP Insight Foundation

Managing the growing number of servers can be complex and expensive for your organization. IT managers need to address changing business needs with tools that meet the challenges of managing today's complex Datacenters.

HP provides management solutions that are designed to simplify a server's installation, configuration and maintenance throughout the entire server lifecycle. This provides the customer with higher levels of operational efficiency and highly reliable systems: http://www.hp.com/go/foundation. The foundation pack includes:

- HP SmartStart
- HP Management DVD
- HP ProLiant Smart Update Firmware DVD
- SmartStart version supported (minimum): SmartStart 8.20. http://www.hp.com/servers/smartstart

NOTE: In an effort to support reducing our environmental impact, the HP Insight Foundation Suite for ProLiant media will be available as a selectable option for this server at time of order of a Factory Integrated Model. This will allow customers to order the number of media kits that best meet their needs and eliminate receiving unnecessary duplicate media.

HP Integrated Lights-Out (iLO)

HP Integrated Lights-Out (iLO) simplifies server setup, health monitoring, power and thermal control, and lights-out remote administration of ProLiant ML, DL, and BL servers. HP iLO functions without additional software and can be accessed from any location via a web browser. HP iLO works hand-in-hand with HP Systems Insight Manager, Insight Control, and Insight

Standard Features

	Dynamics for ProLiant, helping customers unleash the value of the ProLiant platform and deliver the highest possible quality of IT service. For more information, visit: www.hp.com/go/iLO
HP Insight Control	HP Insight Control, a product option, delivers essential infrastructure management that can help save time and money by making it easy to deploy, migrate, monitor, remote control, and optimize your IT infrastructure through a single, simple management console. Two versions of Insight Control are available, to serve environments requiring either a Linux-based or a Windows-based central management server: HP Insight Control for Linux, and HP Insight Control. See www.hp.com/go/insightcontrol HP Insight Control includes one year of 24 x 7 HP Software Technical Support and Update Service ensuring rapid access to HP support staff and proactive delivery of software updates. For more information about this service, please visit: http://www.hp.com/services/insight.
HP Insight Dynamics for ProLiant	HP Insight Dynamics for ProLiant, a product option, is advanced infrastructure management software that enables IT staff to instantly adjust their environments to meet dynamic business demands by provisioning, optimizing and protecting complex infrastructure in minutes. It's a powerful toolkit, integrated-by-design, that accelerates complex technology projects and simplifies daily operations, transforming data center economics. With Insight Dynamics IT professionals can plan capacity and power continuously, balance workloads across physical and virtual resources, and ensure cost-effective high availability. It also enables IT organizations to provision infrastructure consistently and automatically from pools of shared resources using a self-service portal. Resources provisioned can range from a single virtual machine to complex multi-tier environments and their associated physical and virtual resource requirements. In addition to the previous functional benefits, it also provides a cost-effective disaster recovery for physical and virtual environments that works with HP Continuous Access software for both the Enterprise Virtual Array and the XP storage array allowing application environments to be reactivated in minutes with the touch of a button to a remote location. NOTE: For more information, visit: http://www.hp.com/go/insightdynamics

Standard Features

High Performance Clusters	HP Cluster Platforms	HP Cluster Platforms are specifically engineered, factory-integrated large-scale ProLiant clusters optimized for High Performance Computing, with a choice of servers, networks and software. Operating system options include specially priced offerings for Red Hat Enterprise Linux and Novell SLES, as well as Microsoft Windows HPC Server. A Cluster Platform Configurator simplifies ordering. http://www.hp.com/go/clusters
	HP HPC Interconnects	High Performance Computing (HPC) interconnect technologies are available for this server as part of the HP Cluster Platform portfolio. These high-speed InfiniBand and Gigabit interconnects are fully supported by HP when integrated within an HP cluster. Flexible, validated solutions can be defined with the help of configuration tools. http://www.hp.com/techservers/clusters/ucp/index.html
	HP Cluster Management Utility	HP Cluster Management Utility (CMU) is an HP-licensed and HP-supported suite of tools that are used to manage large-scale Linux ProLiant systems. CMU includes software for the centralized provisioning, management and monitoring of nodes. CMU makes the administration of clusters user friendly, efficient, and effective. http://www.hp.com/go/cmu
	HP HPC Linux Value Pack	HP HPC Linux Value Pack (Value Pack) is an HP-licensed and HP-supported specially priced software bundle for the development and deployment of applications on HPC Cluster Platforms. Value Pack includes the Platform HPC Enterprise Edition suite of tools including the LSF workload scheduler, the HP-MPI parallelization library. Also included are the HP Unified Parallel C compiler and the HP Shmem library, as well as the execution environments for the libraries and compiler. HP HPC Linux Value Pack

Operating Systems and Virtualization Software Support for ProLiant Servers	Microsoft Windows Server Red Hat Enterprise Linux (RHEL) SUSE Linux Enterprise Server (SLES) Solaris 10 for x86/x64 based Systems VMware Citrix XenServer NetWare NOTE: NetWare is not supported with Intel Xeon 5600 series processors. NOTE: For more information on HP's Certified and Supported ProLiant Servers for OS and Virtualization Software and latest listing of software drivers available for your server, please visit our Support Matrix at: http://www.hp.com/go/ossupport and our driver download page http://www.hp.com/support/BL460cG6

Standard Features

Availability

- Dual-Port Fibre Channel Mezzanine Card options for redundant SAN connection
- Dual-port embedded 10 Gigabit Ethernet adapters for redundant LAN connections
- Two (2) hot-plug SAS/SATA hard drive bays and integrated RAID (HP Smart Array P410i Controller)
- Optional Battery-backed and Flash-backed write cache module for integrated RAID controller
- Redundant ROM
- Advanced ECC Memory
- Support for Memory Mirroring and Memory Lock-Step Mode
- Network adapter teaming (network fault tolerance, transmit load balancing, switch-assisted load balancing)

Industry Standard Compliance

ACPI 2.0 Compliant
PCI 2.2 Compliant
WOL Support
Microsoft® Logo certifications
USB 2.0 Support

Security

- Power-on password
- Administrator's password
- Integrated Lights-Out 2 has 12 customizable user accounts and SSL encryption
- Integrated Lights-Out 2 can be disabled via a Global Setting

Security - Trusted Platform Module

The TPM (Trusted Platform Module) is a microcontroller chip that can securely store artifacts used to authenticate the server platform. These artifacts can include passwords, certificates and encryption keys. Windows® BitLocker™ Drive Encryption (BitLocker) is a data protection feature available in Windows Server® 2008. BitLocker leverages the enhanced security capabilities of a Trusted Platform Module (TPM) version 1.2. The TPM works with BitLocker to help protect user data and to ensure that a server running Windows Server 2008 has not been tampered with while the system was offline.

NOTE: For more information about TPM, including a white paper, go to http://www.hp.com/go/TPM
NOTE: ProLiant OS pre-installed units will come with the partition required for TPM deployment.
NOTE: The TPM key is unique to every TPM deployed server and must be retained. Misplacing or losing the key could result in data loss.

Standard Features

Factory Express Portfolio for Servers and Storage

HP Factory Express offers configuration, customization, integration and deployment services for HP servers and storage products. Customers can choose how their factory solutions are built, tested, integrated, shipped and deployed.

Factory Express offers service packages for simple configuration, racking, installation, complex configuration and design services as well as individual factory services, such as image loading, asset tagging, and custom packaging. HP products supported through Factory Express include a wide array of servers and storage: HP Integrity, HP ProLiant, HP ProLiant Server Blades, HP BladeSystem, HP 9000 servers as well as the MSAxxxx, VA7xxx, EVA, XP, rackable tape libraries and configurable network switches.

For more information on Factory Express services on your specific server model please contact your sales representative or go to: http://h71028.www7.hp.com/enterprise/cache/97688-0-0-225-121.html

HP Enterprise Configurator

The HP e-Configure Enterprise Configurator now provides factory default racking for our HP hardware portfolio. This approach is aligned with our strategic direction to meet the needs and expectations of our valued customers. If you require "custom" rack configuration, please contact HP's Customer Business Center or an Authorized Partner for assistance. http://www.hp.com/products/configurator.

Service and Support

HP Technology Services for Industry Standard Servers and BladeSystem
Capitalizing on HP ProLiant server and HP BladeSystem capabilities requires a service partner who understands your increasingly complex business technology environment. That's why it makes sense to team up with the people who know HP infrastructure hardware and software best - the experienced professionals at HP Services.

What HP ProLiant and BladeSystem Services can do for you
HP ProLiant and BladeSystem Services can help you design, deploy, test, integrate, support, and manage IT and infrastructure solutions. This way, HP proposes services solutions that include more than just uplift of base warranty. You can get the support you need by choosing from one of a number of service packaged solutions we have designed to address wider set of customer support needs:.

HP Technology Services meets business challenges with services offered in three packages
Optimized Care Package, Standard Care Package, and Basic Care Package - available for each product group. Such packaged solutions enable customers to optimize technology operations, minimize risk and drive better business outcomes with easy-to-buy, easy-to-use scalable support packages for servers, storage, networking and software.

Optimized Care Package

Supports maintaining servers at optimum performance availability

HP Installation and Startup Service for HP BladeSystem c-Class Infrastructure for c3000/c7000 enclosure
Provides for the installation and startup of a BladeSystem c3000 Infrastructure in a single blade enclosure including hardware and software, including deployment of OS, HP SIM, RDP, RDP, PMP and VPM. http://h20195.www2.hp.com/V2/GetPDF.aspx/4AA0-5964ENW

3-Year HP Critical Advantage for c3000/c7000 enclosure + 3-Year HP Critical Advantage for Blade server
Provides end-to-end infrastructure support solution for business critical applications running on virtualized/x86 infrastructures, enabling the customers to cost effectively build, operate, and continuously improve their IT environment. http://h20195.www2.hp.com/V2/GetDocument.aspx?docname=4AA3-1772ENW

HP Installation and Startup Service for HP BladeSystem c-Class Enhanced Network
HP Provides for the configuration and testing of BladeSystem Ethernet interconnect switches to facilitate proper implementation of network protocols and access to advanced features.
http://h20195.www2.hp.com/V2/GetPDF.aspx/4aa0-5969ENW

Additional Services: Virtualization Services - Strategy, Design, Transition, Operation, Continual Service Improvement.

Service and Support

Standard Care Package	Package that maintains high level of server availability HP Installation and Startup Service for HP BladeSystem c-Class Infrastructure for c3000/c7000 enclosure Provides for the installation and startup of a BladeSystem c3000 Infrastructure in a single blade enclosure including hardware and software, including deployment of OS, HP SIM, RDP, RDP, PMP and VPM. http://h20195.www2.hp.com/V2/GetPDF.aspx/4AA0-5964ENW HP Installation and Startup Service for HP BladeSystem c-Class Enhanced Network HP Provides for the configuration and testing of BladeSystem Ethernet interconnect switches to facilitate proper implementation of network protocols and access to advanced features. http://h20195.www2.hp.com/V2/GetPDF.aspx/4aa0-5969ENW 3-Year, HP 6 hour Hardware Support Onsite Call-to-Repair Service for c3000/c7000 enclosure + 3-Year, HP 6 hour Hardware Support Onsite Call-to-Repair Service for Blade server Provides an IT manager with a team of support specialists who will quickly begin troubleshooting the system to help return the hardware to operating condition within 6 hours of the initial service request to the HP Global Solution Center. http://h20195.www2.hp.com/V2/GetPDF.aspx/5981-6636ENN 3-Year , HP 24x7 Software Support for Insight Control Provides for the deployment and basic configuration of HP Insight Control on HP ProLiant ML and DL series servers or HP BladeSystem servers. http://h20195.www2.hp.com/V2/GetPDF.aspx/5981-6645EEE.pdf Additional Services: Software OS (Microsoft, Linux (SUSE/Red Hat) & VMware Installation & Start Up and Software Support); Microsoft or Linux or VMware education courses; +60 Proactive Select Credits, Factory Express.
Basic Care Package	Delivers minimum recommended support service level HP Installation and Startup Service for HP BladeSystem c-Class Infrastructure for c3000/c7000 enclosure Provides for the installation and startup of a BladeSystem c3000 Infrastructure in a single blade enclosure including hardware and software, including deployment of OS, HP SIM, RDP, RDP, PMP and VPM. http://h20195.www2.hp.com/V2/GetPDF.aspx/4AA0-5964ENW 3-Year, HP 24x7 4 hour Response, Hardware Support Onsite Service for c3000/c7000 enclosure + 3-Year, HP 24x7 4 hour Response, Hardware Support Onsite Service for Blade server Provides you with rapid remote support and if required an HP authorized representative who will arrive on site any time and day of the year to begin hardware maintenance service within 4 hours of the service request being logged. http://h20195.www2.hp.com/V2/GetPDF.aspx/5982-6547EEE 3-Year , HP 24x7 Software Support for Insight Control Provides for the deployment and basic configuration of HP Insight Control on HP ProLiant ML and DL series servers or HP BladeSystem servers. http://h20195.www2.hp.com/V2/GetPDF.aspx/5981-6645EEE.pdf Additional Services: Startup Blade System c-Cass Enhanced Network Service; Software OS (Microsoft, Linux (SUSE/Red Hat) & VMware Installation & Start Up and Software Support); +30 Proactive Select Credits, Factory Express.

Insight Remote Support	The packages include HP Insight Remote Support that uses proven technology to deliver secure, reliable 24x7 remote monitoring, diagnoses, and problem resolution. It is available at no additional cost to all warranty, HP Care Pack Service, and service agreement customers.
For more information	To learn more on HP ProLiant servers and HP BladeSystem servers, please contact your HP sales representative or HP Authorized Channel Partner. Or visit: www.hp.com/services/bladesystem

Models

HP ProLiant BL460c G6 X5650 1P 6GB-R P410i/ZM Server 595725-B21 HP ProLiant BL460c G6 X5550 1P 6GB-R P410i Server 507778-B21 HP ProLiant BL460c G6 E5540 1P 6GB-R P410i Server 507779-xx1 HP ProLiant BL460c G6 E5530 1P 6GB-R P410i Server 507780-B21 HP ProLiant BL460c G6 E5520 1P 6GB-R P410i Server 507782-B21 HP ProLiant BL460c G6 E5506 1P 6GB-R P410i Server 507783-B21 HP ProLiant BL460c G6 E5502 1P 6GB-R P410i Server 507784-B21 HP ProLiant BL460c G6 L5520 1P 6GB-R P410i Server 507781-B21	Processor(s) One of the following depending on model	(1) Intel® Xeon® X5650 (2.66GHz/6-core/12MB/95W, DDR3-1333, HT, Turbo 2/2/2/2/3/3) Processor (1) Intel® Xeon® X5550 (2.66GHz/4-core/8MB/95W, DDR3-1333, HT, Turbo 2/2/3/3) Processor (1) Intel® Xeon® E5540 (2.53GHz/4-core/8MB/80W, DDR3-1066, HT, Turbo 1/1/2/2) Processor (1) Intel® Xeon® E5530 (2.40GHz/4-core/8MB/80W, DDR3-1066, HT, Turbo 1/1/2/2) Processor (1) Intel® Xeon® E5520 (2.26GHz/4-core/8MB/80W, DDR3-1066, HT, Turbo 1/1/2/2) Processor (1) Intel® Xeon® E5506 (2.13GHz/4-core/4MB/80W, DDR3-800) Processor (1) Intel® Xeon® L5520 (2.26GHz/4-core/8MB/60W, DDR3-1066, HT, Turbo 1/1/2/2) Processor (1) Intel® Xeon® E5502 (1.86GHz/2-core/4MB/80W, DDR3-800) Processor
	Cache Memory	4MB or 8MB shared L3 cache
	Memory	6 GB (3 x 2 GB) PC3-10600 (DDR3-1333) Registered DIMMs
	Network Adapter	Embedded NC532i Dual Port Flex-10 10GbE Multifunction Server Adapter and one (1) additional 10/100 server adapter dedicated to iLO 2 management
	Storage Controller	HP Smart Array P410i Controller (RAID 0/1)
	Hard Drives	None ship standard
	Internal Storage	SAS: 2TB (2 x 1TB SAS) SATA: 2TB (2 x 1TB SATA) SATA SSD: 240GB (2 x 120GB SATA SSD)
	Optical Drive	None
	Form Factor	Up to eight (8) half-height blades supported in the HP BladeSystem c3000 Enclosure Up to sixteen (16) half-height blades supported in HP BladeSystem c7000 Enclosure

Country Code	Rack Code Key
xx=Worldwide	-B21
xx=Brazil	-201

NOTE: This section lists some of the steps required to configure a Factory Integrated Model. To ensure only valid configurations are ordered, HP recommends the use of an HP approved configurator. Contact your local sales representative for information on CTO product offerings and requirements.
NOTE: For the Standard Features shipped in the "Factory Integrated Models", please see the "Configuration Information - Factory Integrated Models" section.
NOTE: Not all models are available in all regions. Check with your local country HP offices for availability.
NOTE: HP does not allow factory integration of options into standard models listed above.
Configure-to-order server blades must start with a CTO Blade.
NOTE: FIO indicates that this option is a Factory Installable Option.

Step 1: Base Server Blade Configuration (Select a configurable Blade)

Models	HP ProLiant BL460c G6 Configure-to-order Blade	507864-B21
	Configurable Model ships with:	
	Embedded NC532i Dual Port Flex-10 10GbE Multifunction Server Adapter and one (1) additional 10/100 server adapter dedicated to iLO 2 management	
	Integrated Lights-Out 2 Standard Blade Edition	

Step 2: Choose Required Options (one of the following from each list unless otherwise noted)

HP Processors	NOTE: If two processors are desired, select one xxxxxx-L21 and one xxxxxx-B21.	
	Six Core Processor Option Kits	
	HP BL460c G6 Intel® Xeon® X5670 (2.93GHz/6-core/12MB/95W) FIO Processor Kit	595726-L21
	HP BL460c G6 Intel® Xeon® X5650 (2.66GHz/6-core/12MB/95W) FIO Processor Kit	595727-L21
	HP BL460c G6 Intel® Xeon® L5640 (2.26GHz/6-core/12MB/60W) FIO Processor Kit	595728-L21
	Quad-Core Processor Option Kits	
	HP BL460c G6 Intel® Xeon® X5570 (2.93GHz/4-core/8MB/95W) FIO Processor Option Kit	507791-L21
	HP BL460c G6 Intel® Xeon® X5560 (2.80GHz/4-core/8MB/95W) FIO Processor Option Kit	507792-L21
	HP BL460c G6 Intel® Xeon® X5550 (2.66GHz/4-core/8MB/95W) FIO Processor Kit	507793-L21
	HP BL460c G6 Intel® Xeon® E5640 (2.66GHz/4-core/12MB/80W) FIO Processor Kit	595729-L21
	HP BL460c G6 Intel® Xeon® E5540 (2.53GHz/4-core/8MB/80W) FIO Processor Kit	507794-L21
	HP BL460c G6 Intel® Xeon® E5530 (2.40GHz/4-core/8MB/80W) FIO Processor Kit	507797-L21
	HP BL460c G6 Intel® Xeon® L5530 (2.40GHz/4-core/8MB/60W) FIO Processor Kit	507795-L21
	HP BL460c G6 Intel® Xeon® L5520 (2.26GHz/4-core/8MB/60W) FIO Processor Kit	507798-L21
	HP BL460c G6 Intel® Xeon® E5520 (2.26GHz/4-core/8MB/80W) FIO Processor Kit	507799-L21
	HP BL460c G6 Intel® Xeon® L5506 (2.13GHz/4-core/4MB/60W) FIO Processor Kit	513859-L21
	HP BL460c G6 Intel® Xeon® E5506 (2.13GHz/4-core/4MB/80W) FIO Processor Kit	507800-L21
	HP BL460c G6 Intel® Xeon® E5504 (2.0GHz/4-core/4MB/80W) FIO Processor Kit	507801-L21
	Dual-Core Processor Option Kits	
	HP BL460c G6 Intel® Xeon® E5502 (1.86GHz/2-core/4MB/80W) FIO Processor Kit	507802-L21

HP Memory	Registered DIMMS (RDIMMs)	
	HP 2GB (1x2GB) Dual Rank x8 PC3-10600 (DDR3-1333) Registered CAS-9 Memory Kit	500656-B21
	HP 4GB (1x4GB) Dual Rank x4 PC3-10600 (DDR3-1333) Registered CAS-9 Memory Kit	500658-B21
	HP 4GB (1x4GB) Quad Rank x8 PC3-8500 (DDR3-1066) Registered CAS-7 Low Power Memory Kit	500660-B21
	HP 4GB (1x4GB) Single Rank x4 PC3-10600 (DDR3-1333) Registered CAS-9 Memory Kit	593339-B21
	HP 4GB (1x4GB) Single Rank x4 PC3L-10600 (DDR3-1333) Registered CAS-9 Low Power Memory Kit NOTE: Low Voltage DIMMs can only be used with Intel Xeon 5600 series processors.	604504-B21
	HP 8GB (1x8GB) Dual Rank x4 PC3-10600 (DDR3-1333) Registered CAS-9 Memory Kit	500662-B21
	HP 8GB (1x8GB) Dual Rank x4 PC3L-10600 (DDR3-1333) Registered CAS-9 Low Power Memory Kit NOTE: Low Voltage DIMMs can only be used with Intel Xeon 5600 series processors.	604506-B21
	HP 16GB (1x16GB) Quad Rank x4 PC3-8500 (DDR3-1066) Registered CAS-7 Memory Kit	500666-B21
	Unbuffered with ECC DIMMs (UDIMMs)	
	HP 1GB (1x1GB) Single Rank x8 PC3-10600 (DDR3-1333) Unbuffered CAS-9 Memory Kit	500668-B21
	HP 2GB (1x2GB) Dual Rank x8 PC3-10600 (DDR3-1333) Unbuffered CAS-9 Memory Kit	500670-B21
	HP 4GB (1x4GB) Dual Rank x8 PC3-10600 (DDR3-1333) Unbuffered CAS-9 Memory Kit	500672-B21
	NOTE: All DDR3 memory option kits consist of one DIMM per kit. For detailed memory configuration rules and guidelines, please use the Online DDR3 Memory Configuration Tool: www.hp.com/go/ddr3memory-configurator. NOTE: Kits described as LP include Low Power DIMMs. For more information on ProLiant Energy Efficient Features, see: www.hp.com/go/proliant-energy-efficient. NOTE: PC3L is a low voltage memory.	

Step 3: Choose Additional Options for Factory Integration

NOTE: For additional options, please refer to the "Core Options" and "Additional Options" section below. For additional options, including server blade enclosures interconnect and mezzanine options and power subsystem options; please see the Core Options and Additional sections below; or the following:
HP BladeSystem c-Class Enclosures QuickSpecs:
HP BladeSystem c3000 Enclosure QuickSpecs:
http://h18000.www1.hp.com/products/quickspecs/12790_div/12790_div.html
HP BladeSystem c7000 Enclosure QuickSpecs:
http://h18000.www1.hp.com/products/quickspecs/12810_div/12810_div.html
and HP BladeSystem c-Class Interconnect and Mezzanine Components:
http://h18004.www1.hp.com/products/blades/components/c-class-interconnects.html
http://h18004.www1.hp.com/products/blades/components/c-class-adapters.html

Core Options

HP Ethernet Mezzanine Options	Gigabit Ethernet Mezzanines	
	HP NC325m PCI Express Quad Port Gigabit Server Adapter	416585-B21
	NOTE: If the NC325m is installed in mezzanine slot 1 of a half-height server, connectivity will be provided on 2 of the 4 ports.	
	HP NC360m Dual Port 1GbE BL-c Adapter	445978-B21
	HP NC364m Quad Port 1GbE BL-c Adapter	447883-B21
	NOTE: If the NC364m is installed in mezzanine slot 1 of a half-height server, connectivity will be provided on only 2 of the 4 ports.	
	HP NC382m PCI Express Dual Port Multifunction Gigabit Server Adapter	453246-B21
	NOTE: The Gigabit Ethernet adapters above transmit from the server at 2000 Mbps, full duplex per port only. For more information, see the "Network Controller" segment in the Standards Features section.	
	10 Gigabit Ethernet Mezzanines	
	NOTE: A 10 Gigabit Ethernet adapter is required for each server blade connecting to a 10Gb interconnect in bays 3-8 (HP BladeSystem c7000 Enclosure) or bays 2-4 (HP BladeSystem c3000 Enclosure). NOTE: Each 10 Gigabit Ethernet adapter requires a minimum of 2GB of server memory. NOTE: Each 10 Gigabit Either adapter supports linking at 1000Mbps or 10000Mbps when not connected to a Flex-10 enabled module and will link with all current 1Gb switches at 1Gb. NOTE: The ROM Based Setup Utility (RBSU) feature allows for the configuring of a FlexFabric Adapter to any of the supported protocols. For example iSCSI to FCoE (Fibre Channel over Ethernet). Note that a HP Virtual Connect profile takes precedence over the setting in this menu. Also, some FlexFabric Adapters may require that network boot be enabled in order to configure the protocol. If the protocol is configured without enabling network boot with certain FlexFabric Adapters, the protocol may not take effect. Once the protocol has taken effect on the first boot after configuring this option, network boot may be disabled if desired.	
	HP NC532m Dual Port 10GbE Multifunction BL-c Adapter	467799-B21
	HP NC542m Dual Port Flex-10 10GbE BL-c Adapter	539857-B21
	HP NC550m 10Gb 2-port PCIe x8 Flex-10 Ethernet Adapter	581204-B21
	HP BLc NC551m Dual Port FlexFabric 10Gb Converged Network Adapter	580151-B21
	HP NC553m 10Gb 2-port FlexFabric Adapter	613431-B21
HP Fiber Channel Mezzanine Options	Emulex LPe1205 8Gb Fibre Channel Host Bus Adapter for c-Class BladeSystem	456972-B21
	Emulex LPe1105 4Gb Fibre Channel Host Bus Adapter for c-Class BladeSystem	403621-B21
	QLogic QMH2562 8Gb Fibre Channel Host Bus Adapter for c-Class BladeSystem	451871-B21
	QLogic QMH2462 4Gb Fibre Channel Host Bus Adapter for c-Class BladeSystem	403619-B21
	HP BLc Brocade 804 8Gb Fibre Channel Host Bus Adapter	590647-B21

Core Options

HP Processors	Six-Core Processor Option Kits	
	HP BL460c G6 Intel® Xeon® X5670 (2.93GHz/6-core/12MB/95W) Processor Kit	595726-B21
	HP BL460c G6 Intel® Xeon® X5650 (2.66GHz/6-core/12MB/95W) Processor Kit	595727-B21
	HP BL460c G6 Intel® Xeon® L5640 (2.26GHz/6-core/12MB/60W) Processor Kit	595728-B21
	Quad-Core Processor Option Kits	
	HP BL460c G6 Intel® Xeon® X5570 (2.93GHz/4-core/8MB/95W) Processor Kit	507791-B21
	HP BL460c G6 Intel® Xeon® X5560 (2.80GHz/4-core/8MB/95W) Processor Kit	507792-B21
	HP BL460c G6 Intel® Xeon® X5550 (2.66GHz/4-core/8MB/95W) Processor Kit	507793-B21
	HP BL460c G6 Intel® Xeon® E5640 (2.66GHz/4-core/12MB/80W) Processor Kit	595729-B21
	HP BL460c G6 Intel® Xeon® E5540 (2.53GHz/4-core/8MB/80W) Processor Kit	507794-B21
	HP BL460c G6 Intel® Xeon® E5530 (2.40GHz/4-core/8MB/80W) Processor Kit	507797-B21
	HP BL460c G6 Intel® Xeon® L5530 (2.40GHz/4-core/8MB/60W) Processor Kit	507795-B21
	HP BL460c G6 Intel® Xeon® L5520 (2.26GHz/4-core/8MB/60W) Processor Kit	507798-B21
	HP BL460c G6 Intel® Xeon® E5520 (2.26GHz/4-core/8MB/80W) Processor Kit	507799-B21
	HP BL460c G6 Intel® Xeon® L5506 (2.13GHz/4-core/4MB/60W) Processor Kit	513859-B21
	HP BL460c G6 Intel® Xeon® E5506 (2.13GHz/4-core/4MB/80W) Processor Kit	507800-B21
	HP BL460c G6 Intel® Xeon® E5504 (2.00GHz/4-core/4MB/80W) Processor Kit	507801-B21
	Dual-Core Process Option Kits	
	HP BL460c G6 Intel® Xeon® E5502 (1.86GHz/2-core/4MB/80W) Processor Kit	507802-B21

HP Memory	Registered DIMMS (RDIMMs)	
	HP 2GB (1x2GB) Dual Rank x8 PC3-10600 (DDR3-1333) Registered CAS-9 Memory Kit	500656-B21
	HP 4GB (1x4GB) Dual Rank x4 PC3-10600 (DDR3-1333) Registered CAS-9 Memory Kit	500658-B21
	HP 4GB (1x4GB) Quad Rank x8 PC3-8500 (DDR3-1066) Registered CAS-7 Low Power Memory Kit	500660-B21
	HP 4GB (1x4GB) Single Rank x4 PC3-10600 (DDR3-1333) Registered CAS-9 Memory Kit	593339-B21
	HP 4GB (1x4GB) Single Rank x4 PC3L-10600 (DDR3-1333) Registered CAS-9 Low Power Memory Kit NOTE: Low Voltage DIMMs can only be used with Intel Xeon 5600 series processors.	604504-B21
	HP 8GB (1x8GB) Dual Rank x4 PC3-10600 (DDR3-1333) Registered CAS-9 Memory Kit	500662-B21
	HP 8GB (1x8GB) Dual Rank x4 PC3L-10600 (DDR3-1333) Registered CAS-9 Low Power Memory Kit NOTE: Low Voltage DIMMs can only be used with Intel Xeon 5600 series processors.	604506-B21
	HP 16GB (1x16GB) Quad Rank x4 PC3-8500 (DDR3-1066) Registered CAS-7 Memory Kit	500666-B21
	Unbuffered with ECC DIMMs (UDIMMs)	
	HP 1GB (1x1GB) Single Rank x8 PC3-10600 (DDR3-1333) Unbuffered CAS-9 Memory Kit	500668-B21
	HP 2GB (1x2GB) Dual Rank x8 PC3-10600 (DDR3-1333) Unbuffered CAS-9 Memory Kit	500670-B21

	HP 4GB (1x4GB) Dual Rank x8 PC3-10600 (DDR3-1333) Unbuffered CAS-9 Memory Kit	500672-B21
	NOTE: All DDR3 memory option kits consist of one DIMM per kit. For detailed memory configuration rules and guidelines, please use the Online DDR3 Memory Configuration Tool: www.hp.com/go/ddr3memory-configurator.	
	NOTE: Kits described as LP include Low Power DIMMs. For more information on ProLiant Energy Efficient Features, see: http://h18004.www1.hp.com/products/servers/platforms/energyefficient/	
	NOTE: PC3L is a low voltage memory.	
HP Hard Drives	NOTE: The components of a storage subsystem (e.g. the drive, the HBA/controller, firmware, and the server backplane) should operate at the same data transfer rate or the system bandwidth will be negotiated down to an acceptable level for all components.	
	NOTE: Hard drives have either a one year or three year warranty; refer to the specific hard drive QuickSpecs for details.	
	SAS Hot Plug SFF (2.5-inch) Enterprise (ENT) Drives	
	HP 900GB 6G SAS 10K rpm SFF (2.5-inch) Enterprise 3yr Warranty Hard Drive	619291-B21
	HP 600GB 6G SAS 10K rpm SFF (2.5-inch) Dual Port Enterprise 3yr Warranty Hard Drive	581286-B21
	HP 450GB 6G SAS 10K rpm SFF (2.5-inch) Dual Port Enterprise 3yr Warranty Hard Drive	581284-B21
	HP 300GB 6G SAS 10K rpm SFF (2.5-inch) Dual Port Enterprise 3yr Warranty Hard Drive	507127-B21
	HP 146GB 6G SAS 15K rpm SFF (2.5-inch) Dual Port Enterprise 3yr Warranty Hard Drive	512547-B21
	HP 146GB 6G SAS 10K rpm SFF (2.5-inch) Dual Port Enterprise 3yr Warranty Hard Drive	507125-B21
	HP 72GB 6G SAS 15K rpm SFF (2.5-inch) Dual Port Enterprise 3yr Warranty Hard Drive	512545-B21
	SAS Hot Plug SFF (2.5-inch) Midline (MDL) Drives	
	HP 1TB 6G SAS 7.2K rpm SFF (2.5-inch) Hot Plug Midline 1yr Warranty Hard Drive	605835-B21
	HP 500GB 6G SAS 7.2K rpm SFF (2.5-inch) Dual Port Midline 1yr Warranty Hard Drive	507610-B21
	NOTE: Please see QuickSpecs for Technical Specifications and additional information: http://h18000.www1.hp.com/products/quickspecs/12244_div/12244_div.html (Worldwide)	
	NOTE: The hard drive options are not required when configuring a Drive-less Model.	
	SATA Hot Plug SFF (2.5-inch) Midline (MDL) Drives	
	HP 1TB 3G SATA 7.2K rpm SFF (2.5-inch) Hot Plug Midline 1yr Warranty Hard Drive	625609-B21
	HP 500GB 3G SATA 7.2K rpm SFF (2.5-inch) Midline 1yr Warranty Hard Drive	507750-B21
	HP 160GB 3G SATA 7.2K rpm SFF (2.5-inch) Midline 1yr Warranty Hard Drive	530888-B21
	SATA Hot Plug SFF (2.5-inch) Entry (ETY) Drives	
	HP 250GB 3G SATA 5.4K rpm SFF (2.5-inch) Entry 1yr Warranty Hard Drive	460355-B21

Core Options

HP 120GB 1.5G SATA 5.4K rpm SFF (2.5-inch) Entry 1yr Warranty Hard Drive	458924-B21
NOTE: Please see the QuickSpecs for Technical Specifications and additional information: http://h18000.www1.hp.com/products/quickspecs/13021_div/13021_div.html (Worldwide)	
SATA Hot Plug SFF Midline Solid State Drives	
HP 60GB 3G SATA SFF (2.5-inch) Midline 1yr Warranty Solid State Drive	572071-B21
HP 120GB 3G SATA SFF (2.5-inch) Midline 1yr Warranty Solid State Drive	572073-B21
NOTE: Please see the QuickSpecs for Technical Specifications and additional information: http://h18000.www1.hp.com/products/quickspecs/13121_div/13121_div.html	

HP Insight software	HP Insight Control	
	HP Insight Control including 1yr 24x7 Technical Support and Updates Electronic License	T9074BAE
	HP Insight Control including 1yr 24x7 Technical Support and Updates Single Server License	452148-B22
	HP Insight Software Media Kit NOTE: Insight Software DVD media without licenses. Contains Insight Control, Insight Dynamics and Virtual Connect Enterprise Manager. Uses an integrated installer to perform quick and accurate software installation and updates. NOTE: Licenses ship without media. The HP Insight Control Media Kit can be ordered separately, or can be downloaded at: http://www.hp.com/go/insightupdates. NOTE: Electronic licenses can be used to purchase multiple licenses with a single activation key, and is available in all countries except China and Japan. Customers in China and Japan should order the physical equivalent. NOTE: Customer will receive a license entitlement certificate, which must be redeemed online or via fax in order to obtain the license activation key(s). Includes one year of 24 x 7 HP Software Technical Support & Update Service. NOTE: For additional license kits, including bundles with HP BladeSystem enclosures, please see the Insight Control QuickSpecs at: http://h18004.www1.hp.com/products/quickspecs/12631_div/12631_div.html	436222-B21
	HP Insight Control for Linux	
	HP Insight Control for Linux including 1yr 24x7 Support Electronic License NOTE: This part number can be purchased as a single license or as multiple licenses with a single activation key. Customer will receive a license entitlement certificate via e-mail. The license entitlement certificate must be redeemed online or via fax in order to obtain the license activation key(s). Includes one year of 24 x 7 HP Software Technical Support and Update Service. NOTE: Electronic LTUs are only available through limited points of sales; if not available, order a printed license entitlement certificate instead.	TC213AAE
	HP Insight Control for Linux including 1yr 24x7 Support Single Server License	TC209A
	HP Insight Control for Linux Media Kit NOTE: This optional Media pack DVD contains the ISO image for HP Insight Control for Linux, HP Systems Insight Manager, HP Insight Control power management, HP Insight Control virtual machine management, and an integrated installer. Servers must be acquired separately. NOTE: This Media pack is optional because the latest ISO image and latest updates may be downloaded at no cost from: http://www.hp.com/go/ic-linux (click on Download button). NOTE: Licenses ship without media. The Media Kit for Insight Control for Linux can be ordered separately, or can be downloaded at: http://www.hp.com/go/ic-linux (click on Download button). NOTE: Electronic licenses can be used to purchase multiple licenses with a single activation key, and are available in all countries except China and Japan. Customers in China and Japan should order the physical equivalent. NOTE: Customer will receive a license entitlement certificate, which must be redeemed online or via fax in order to obtain the license activation key(s). Includes one year of 24 x 7 HP Software Technical Support Service. NOTE: For additional License Kits, including electronic licensing options, please see the QuickSpecs at:	TC208A

Additional Options

	http://h18000.www1.hp.com/products/quickspecs/13019_div/13019_div.html	
	HP Integrated Lights-Out (iLO) Advanced for ProLiant BladeSystem Remote Management	
	HP iLO Advanced for BladeSystem including 1yr 24x7 Support Single Server License	512488-B21
	NOTE: Electronic licenses can be used to purchase multiple licenses with a single activation key, and is available in all countries except China and Japan. Customers in China and Japan should order the physical equivalent. NOTE: Customer will receive a license entitlement certificate, which must be redeemed online or via fax in order to obtain the license activation key(s). Includes one year of 24 x 7 HP Software Technical Support Service. NOTE: For additional license kits please see the HP Integrated Lights-Out (iLO) QuickSpecs at: www.hp.com/go/iLO.	
	HP Insight Control server deployment	
	HP Insight Control Server Deployment including 1yr 24x7 Support Electronic License	T9082AAE
	HP Insight Control Server Deployment including 1yr 24x7 Support Single Server License	452151-B21
	NOTE: Licenses ship without media. The Insight Control Media Kit can be ordered separately, or can be downloaded at: http://www.hp.com/go/insightupdates. NOTE: Electronic licenses can be used to purchase multiple licenses with a single activation key, and is available in all countries except China and Japan. Customers in China and Japan should order the physical equivalent. NOTE: Customer will receive a license entitlement certificate, which must be redeemed online or via fax in order to obtain the license activation key(s). Includes one year of 24 x 7 HP Software Technical Support Service. NOTE: For additional license kits please see the Insight Control QuickSpecs at: http://h18004.www1.hp.com/products/quickspecs/12631_div/12631_div.html	
High Performance Clusters	HP Cluster Management Utility Compute Node Flexible License	QL803A
	NOTE: This part number can be used to purchase one certificate for multiple licenses with a single activation key. Each license is for one node (server). Customer will receive a printed end user license agreement and license entitlement certificate via physical shipment. The license entitlement certificate must be redeemed online in order to obtain a license key. NOTE: For additional license kits please see the QuickSpecs at: http://h18004.www1.hp.com/products/quickspecs/12612_div/12612_div.html	
	HP Cluster Management Utility License and Media	433257-B21
	NOTE: Order a minimum of one license per cluster to purchase media including software and documentation, which will be delivered to the customer, and also licenses CMU management. No license key is delivered or required. NOTE: For additional license kits please see the QuickSpecs at: http://h18004.www1.hp.com/products/quickspecs/12612_div/12612_div.html	
	HP High Performance Computing Linux Value Pack 1 Processor Flexible License	TC293B
	NOTE: This part number can be used to purchase one certificate for multiple licenses with a single activation key. Each license is for one socket (a.k.a. processor). Customer will receive a printed end user license agreement and license entitlement certificate via physical shipment. The license entitlement certificate must be redeemed online in order to obtain a license key. NOTE: For additional license kits please see the QuickSpecs at: http://h18004.www1.hp.com/products/quickspecs/13485_div/13485_div.html	

Additional Options

	HP High Performance Computing Linux Value Pack Media Kit NOTE: This part number can be used to purchase media including software and documentation, which will be delivered to the customer. NOTE: For additional license kits please see the QuickSpecs at: http://h18004.www1.hp.com/products/quickspecs/13485_div/13485_div.html	TC294A
HP Security - TPM	HP Trusted Platform Module Option NOTE: The TPM key is unique to every TPM deployed server and must be retained. Misplacing or losing the key could result in data loss.	488069-B21
HP Storage Controllers	HP Smart Array P700m/512 4-ports Ext PCIe x8 SAS Controller	508226-B21
	HP Smart Array P700m/256 4-ports Ext PCIe x8 SAS Controller	507925-B21
	NOTE: Please see the QuickSpecs for Technical Specifications and additional information: http://h18000.www1.hp.com/products/quickspecs/13175_div/13175_div.html (Worldwide)	
	Optional Upgrades NOTE: The following options are for the integrated HP Smart Array P410i Controller.	
	HP 256MB P-series Cache Upgrade	462968-B21
	HP 650 mAh P-Series Battery NOTE: This kit is only for use with the 256 MB Cache Module. NOTE: This kit includes the cable required to attach battery to cache.	462969-B21
	HP 512MB P-Series Battery Backed Write Cache Upgrade NOTE: This kit includes the cable required to attach battery to cache.	462967-B21
	HP 512MB Flash Backed Write Cache	534916-B21
	HP 1GB Flash Backed Cache	534562-B21
	HP Smart Array Advanced Pack including 1yr 24x7 Technical Support and Updates Single Server License NOTE: A license key, a minimum of 256MB cache, and battery kit is required to enable Smart Array Advanced Pack features. For more information go to: http://www.hp.com/go/saap	516471-B21
	NOTE: Please see the QuickSpecs for Technical Specifications and additional information: http://h18000.www1.hp.com/products/quickspecs/13201_div/13201_div.html (Worldwide)	
HP I/O Expansion Options	HP StorageWorks 320GB IO Accelerator for BladeSystem c-Class	AJ878B
	HP 640GB IO Accelerator for BladeSystem c-Class	BK836A
	NOTE: Please see the QuickSpecs for Technical Specifications and additional information: http://h18000.www1.hp.com/products/quickspecs/13220_div/13220_div.html	

Additional Options

HP c-Class Mezzanine Options	HP 4X QDR QLogic InfiniBand Dual Port Mezzanine HCA for c-Class BladeSystem	583210-B21
	HP 4X QDR InfiniBand ConnectX-2 Dual Port Mezzanine HCA for c-Class BladeSystem	592519-B21
	NOTE: Please see the QuickSpecs for Technical Specifications and additional information: http://h18000.www1.hp.com/products/quickspecs/12586_div/12586_div.html	
HP Ultrium Tape Blades	HP StorageWorks SB1760c Tape Blade	AQ697A
	NOTE: LTO-4 Ultrium tape technology.	
	NOTE: The HP PCI Express Mezzanine Pass-Thru Card for HP BladeSystem (431643-B21) is required when installing a tape blade adjacent to a full-height server blade.	
	NOTE: Please see the QuickSpecs for Technical Specifications and additional information: http://h18000.www1.hp.com/products/quickspecs/12729_div/12729_div.html	
HP Storage Blades	HP StorageWorks LTO-5 SB3000c Tape Blade	BS580A
	NOTE: Please see the QuickSpecs for Technical Specifications and additional information: http://h18000.www1.hp.com/products/quickspecs/12729_div/12729_div.html (Worldwide)	
	HP StorageWorks SB40c with Virtual SAN Appliance Software Bundle	AT459A
	NOTE: Please see the QuickSpecs for Technical Specifications and additional information: http://h18000.www1.hp.com/products/quickspecs/12587_div/12587_div.html (Worldwide)	
	HP D2200sb Storage Blade	AP880A
	NOTE: Please see the HP D2200sb PCIe Storage Blade QuickSpecs for technical specifications and additional information at: http://h18006.www1.hp.com/storage/bladesystem/index.html.	
	HP StorageWorks SB40c Storage Blade	411243-B21
	NOTE: Please see the QuickSpecs for Technical Specifications and additional configuration information at: http://h18000.www1.hp.com/products/quickspecs/12587_div/12587_div.html (Worldwide)	
HP Expansion Blade	HP BLc PCI Expansion Blade	448018-B21
	NOTE: Ships with one pre-installed PCI-X connect board. Also includes one PCIe connect board which requires installation.	
	NOTE: Please see the QuickSpecs for Technical Specifications and additional information: http://h18000.www1.hp.com/products/quickspecs/12753_div/12753_div.html	

Additional Options

HP USB and SD Options	HP USB 2-Button Optical Scroll Mouse	DC172B
	HP USB Standard Keyboard	DT528A#ABA
	HP 2GB USB Flash Media Drive Key Kit NOTE: HP qualified blank USB key for use with HP ProLiant servers that support the VMware virtualization environment and other HP value-add software like SmartStart. HP recommends this industry standard USB flash device for use with VMware ESXi. USB device must be installed in the internal slot of the ProLiant server for use with VMware ESXi. Refer to HP VMware Getting Started Guide for installation instructions.	608447-B21
	HP 4GB Secure Digital High Capacity Flash Media Kit NOTE: Blank SD media devices are supported for use with VMware and Citrix. SD media must be installed in the internal slot of the ProLiant server. Learn more at: http://www.hp.com/go/proliantvirtualization	580387-B21

HP Care Pack Services	NOTE: The HP Care Pack service part numbers below for ProLiant BL c-Class server blades, cover the server blade and all HP branded hardware options qualified for the server, purchased at the same time or afterwards, internal to the server.	
	Hardware Services On-site Service	
	HP 3 year 4 hour 13x5 BL4xxc Server Blade Hardware Support	UK065E
	HP 3 year 4 hour 24x7 BL4xxc Server Blade Hardware Support	UK066E
	HP 3 year 6 hour 24x7 Call to Repair BL4xxc Server Blade Hardware Support	UK067E

Memory

NOTE: Memory configurations listed do not apply to "Factory Integrated Models".

Memory Population Guidelines

For detailed memory configuration rules and guidelines, please use the Online DDR3 Memory Configuration Tool: www.hp.com/go/ddr3memory-configurator

Some DIMM installation guidelines are summarized below:

- For the HP ProLiant BL460c G6 server with twelve (12) memory slots:
  - There are three (3) channels per processor; six (6) channels per server
  - There are two (2) DIMM slots for each memory channel; twelve (12) total slots.
  - Memory channel 1 consists of the two (2) DIMMs that are closest to the processor
  - Memory channel 3 consists of the two (2) DIMMs that are furthest from the processor
- DIMM slots that are white should be populated first
- Do not mix Unbuffered memory (UDIMMs) with Registered memory (RDIMMs).
- Do not install DIMMs if the corresponding processor is not installed
- If only one processor is installed in a 2CPU system, only half of the DIMM slots are available
- To maximize performance, balance the total memory capacity between all installed processors
- It is not required, but it is recommended to load the channels similarly if possible
- Populate DIMMs from heaviest load (quad-rank) to lightest load (single-rank) within a channel
- Heaviest load (DIMM with most ranks) within a channel goes furthest from the processor
- For memory mirroring mode, channel 3 must be unpopulated. Channels 1 and 2 are populated identically
- For lock-step mode, channel 3 must be unpopulated. DIMMs in channels 1 and 2 will be installed in pairs. The paired slots will be 1,4; 2,5 on the BL460c G6
- Low Voltage DIMMs can only be used with Intel Xeon 5600 series processors.
- If mixing DIMM voltage is a requirement, please note that the DIMMs will run at 1.5V since all 1.35V are capable of supporting 1.5V operations

DIMM slot/capacity/populated speed table										
DIMM Type	Registered DIMMS (RDIMMs)							Unbuffered with ECC DIMMs (UDIMMs)		
DIMM Rank	Single Rank (1R)	Dual Rank (2R)				Quad Rank (4R)		Single Rank (1R)	Dual Rank (2R)	
DIMM Capacity	4GB	2GB	4GB	8GB	8GB	4GB	16GB	1GB	2GB	4GB
DIMM Native Speed (MHz)	1333	1333	1333	1066	1333	1066	1066	1333	1333	1333
DIMM Voltage	LV/Reg	Reg	Reg	Reg	LV/Reg	Reg	Reg	Reg	Reg	Reg
SLOTS THAT CAN BE POPULATED										
12 slot servers	12	12	12	12	12	12	12	12	12	12
MAXIMUM CAPACITY (GB)										
	48	24	48	96	96	48	192	12	24	48
POPULATED DIMM SPEED (MHz)										
1 DIMM Per Channel	1333	1333	1333	1066	1333	1066	1066	1333	1333	1333
2 DIMM Per Channel	1333	1333*	1333*	1066	1333*	800	800	1333*	1333*	1333*
*Supported at 1333 via setting in ROM based setup utility (RBSU).										

NOTES:

Memory

- PC3-10600 DIMMs have a maximum speed of 1333MHz. PC3-8500 DIMMs have a maximum speed of 1066MHz.
- Mixing DIMM speeds is allowed, but the system processor speed rules always override the DIMM capabilities
- If you do mix DIMM speeds, the memory bus will default to the minimum clock rate of all DIMMs in the system - even if the slower DIMM is on the other processor
- If you install 1x 1066MHz DIMM in channel 1 and 1x 1333MHz DIMM in channel 2, the maximum speed will be 1066MHz
- If you install 1x 1066MHz DIMM in channel 1 and 5x 1333MHz DIMMs with 1 DIMM Per Channel (DPC) in each of the other channels, the maximum speed will be 1066MHz
- Maximum memory speed will also depend on the processor installed
- References to the above MHz speeds are for the various speeds of DDR3 DIMMs; 1333 refers to DDR3-1333, etc.

HP ProLiant BL460c G6 Server Blade DIMM slot and configuration diagrams

Basic memory slot and population diagram

- Population order; start with "A" first, "B" second, "C" third, etc.

12 DIMM SLOTS (6 per CPU node)					
	CPU1		CPU2		
	slot #	population order	slot #	population order	
Chnl 1	1	D	1	D	Chnl 1
	2	A	2	A	
Chnl 2	3	E	3	E	Chnl 2
	4	B	4	B	
Chnl 3	5	F	5	F	Chnl 3
	6	C	6	C	

HP ProLiant BL460c G6 Server Blade (1P Model)

Standard memory configuration (1 CPU model)

- 6GB (3 x 2GB) of PC3-10600 (DDR3-1333) RDIMMs

	CPU1		CPU2		
	slot #	population order	slot #	population order	
Chnl 1	1	D: empty	1	D: empty	Chnl 1
	2	A: 2GB DIMM	2	A: empty	
Chnl 2	3	E: empty	3	E: empty	Chnl 2
	4	B: 2GB DIMM	4	B: empty	
Chnl 3	5	F: empty	5	F: empty	Chnl 3
	6	C: 2GB DIMM	6	C: empty	

Standard Memory Plus Optional Memory (1 CPU model)

- 30 GB of PC3-10600 (DDR3-1333) RDIMMs (3 x 2GB plus 3 x 8GB)

Memory

	CPU1		CPU2		
	slot #	population order	slot #	population order	
Chnl 1	1	D: 2GB DIMM	1	D: empty	Chnl 1
	2	A: 8GB DIMM	2	A: empty	
Chnl 2	3	E: 2GB DIMM	3	E: empty	Chnl 2
	4	B: 8GB DIMM	4	B: empty	
Chnl 3	5	F: 2GB DIMM	5	F: empty	Chnl 3
	6	C: 8GB DIMM	6	C: empty	

Standard Memory Replaced with Optional Memory (1 CPU model)

- 96GB of PC3-8500 Quad-Rank RDIMMs (6 x 16GB)

	CPU1		CPU2		
	slot #	population order	slot #	population order	
Chnl 1	1	D: 16GB DIMM	1	D: empty	Chnl 1
	2	A: 16GB DIMM	2	A: empty	
Chnl 2	3	E: 16GB DIMM	3	E: empty	Chnl 2
	4	B: 16GB DIMM	4	B: empty	
Chnl 3	5	F: 16GB DIMM	5	F: empty	Chnl 3
	6	C: 16GB DIMM	6	C: empty	

UDIMM maximum configuration (1 CPU model)

- 24GB, consisting of six (6) 4GB dual-rank PC3-10600 UDIMMs

	CPU1		CPU2		
	slot #	population order	slot #	population order	
Chnl 1	1	D: 4GB DIMM	1	D: empty	Chnl 1
	2	A: 4GB DIMM	2	A: empty	
Chnl 2	3	E: 4GB DIMM	3	E: empty	Chnl 2
	4	B: 4GB DIMM	4	B: empty	
Chnl 3	5	F: 4GB DIMM	5	F: empty	Chnl 3
	6	C: 4GB DIMM	6	C: empty	

Standard Memory Replaced with Optional Memory (2 CPU Model)
RDIMM maximum configuration

- 192GB, consisting of twelve (12) 16GB quad-rank PC3-8500 RDIMMs

Memory

	CPU1		CPU2		
	slot #	population order	slot #	population order	
Chnl 1	1	D: 16GB DIMM	1	D: 16GB DIMM	Chnl 1
	2	A: 16GB DIMM	2	A: 16GB DIMM	
Chnl 2	3	E: 16GB DIMM	3	E: 16GB DIMM	Chnl 2
	4	B: 16GB DIMM	4	B: 16GB DIMM	
Chnl 3	5	F: 16GB DIMM	5	F: 16GB DIMM	Chnl 3
	6	C: 16GB DIMM	6	C: 16GB DIMM	

UDIMM maximum configuration (2 CPU model)

- 48GB, consisting of twelve (12) 4GB dual-rank PC3-10600 UDIMMs

	CPU1		CPU2		
	slot #	population order	slot #	population order	
Chnl 1	1	D: 4GB DIMM	1	D: 4GB DIMM	Chnl 1
	2	A: 4GB DIMM	2	A: 4GB DIMM	
Chnl 2	3	E: 4GB DIMM	3	E: 4GB DIMM	Chnl 2
	4	B: 4GB DIMM	4	B: 4GB DIMM	
Chnl 3	5	F: 4GB DIMM	5	F: 4GB DIMM	Chnl 3
	6	C: 4GB DIMM	6	C: 4GB DIMM	

NOTE: Capacity references are rounded to the common Gigabyte values.

- 1GB = 1024MB
- 2GB = 2048MB
- 4GB = 4096MB
- 8GB = 8192MB
- 16GB = 16384MB

Memory

Following are memory options available from HP:

HP Memory	Registered DIMMs (RDIMMs)	
	HP 2GB (1x2GB) Dual Rank x8 PC3-10600 (DDR3-1333) Registered CAS-9 Memory Kit	500656-B21
	HP 4GB (1x4GB) Dual Rank x4 PC3-10600 (DDR3-1333) Registered CAS-9 Memory Kit	500658-B21
	HP 4GB (1x4GB) Quad Rank x8 PC3-8500 (DDR3-1066) Registered CAS-7 Low Power Memory Kit	500660-B21
	HP 4GB (1x4GB) Single Rank x4 PC3-10600 (DDR3-1333) Registered CAS-9 Memory Kit	593339-B21
	HP 4GB (1x4GB) Single Rank x4 PC3L-10600 (DDR3-1333) Registered CAS-9 Low Power Memory Kit	604504-B21
	NOTE: Low Voltage DIMMs can only be used with Intel Xeon 5600 series processors.	
	HP 8GB (1x8GB) Dual Rank x4 PC3-10600 (DDR3-1333) Registered CAS-9 Memory Kit	500662-B21
	HP 8GB (1x8GB) Dual Rank x4 PC3L-10600 (DDR3-1333) Registered CAS-9 Low Power Memory Kit	604506-B21
	NOTE: Low Voltage DIMMs can only be used with Intel Xeon 5600 series processors.	
	HP 16GB (1x16GB) Quad Rank x4 PC3-8500 (DDR3-1066) Registered CAS-7 Memory Kit	500666-B21
	Unbuffered with ECC DIMMs (UDIMMs)	
	HP 1GB (1x1GB) Single Rank x8 PC3-10600 (DDR3-1333) Unbuffered CAS-9 Memory Kit	500668-B21
	HP 2GB (1x2GB) Dual Rank x8 PC3-10600 (DDR3-1333) Unbuffered CAS-9 Memory Kit	500670-B21
	HP 4GB (1x4GB) Dual Rank x8 PC3-10600 (DDR3-1333) Unbuffered CAS-9 Memory Kit	500672-B21
	NOTE: All DDR3 memory option kits consist of one DIMM per kit. For detailed memory configuration rules and guidelines, please use the Online DDR3 Memory Configuration Tool: www.hp.com/go/ddr3memory-configurator.	
	NOTE: PC3L is a low voltage memory.	

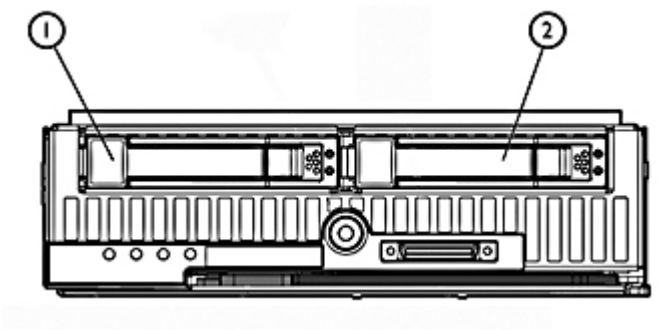

1-2 2 x SFF SAS or SATA Hot Plug Hard Drives or SATA solid state drives

Hard Drives

NOTE: The components of a storage subsystem (e.g. the drive, the HBA/controller, firmware, and the server backplane) should operate at the same data transfer rate or the system bandwidth will be negotiated down to an acceptable level for all components.

NOTE: Hard drives have either a one year or three year warranty; refer to the specific hard drive QuickSpecs for details.

SAS Hot Plug SFF (2.5-inch) Enterprise (ENT) Drives

	Quantity Supported	Position Supported	Controller
900GB 6G SAS 10K 600GB 6G SAS 10K 450GB 6G SAS 10K 300GB 6G SAS 10K 146GB 6G SAS 15K 146GB 6G SAS 10K 72GB 6G SAS 15K	2	1-2	HP Smart Array P410i Controller

SAS Hot Plug SFF (2.5-inch) Midline (MDL) Drives

	Quantity Supported	Position Supported	Controller
1TB 3G SATA 7.2K 500GB 3G SATA 7.2K	2	1-2	HP Smart Array P410i Controller

SATA Non-Hot Plug SFF (2.5-inch) Midline (MDL) Drives

	Quantity Supported	Position Supported	Controller
1TB 6G SAS 7.2K 500GB 3G SATA 7.2K 160GB 3G SATA 7.2K	2	1-2	HP Smart Array P410i Controller

SATA Hot Plug SFF (2.5-inch) Entry (ETY) Drives

	Quantity Supported	Position Supported	Controller
250GB 3G SATA 5.4K 120GB 1.5 G SATA 5.4K	2	1-2	HP Smart Array P410i Controller

Storage

SATA Hot Plug SFF Midline solid state drives

	Quantity Supported	Position Supported	Controller
120GB 3G SATA SSD 60GB 3G SATA SSD	2	1-2	HP Smart Array P410i Controller

External Storage

	Quantity Supported	Position Supported	Host Controller or Adapter
XP Disk Array Systems	Please see the XP Disk Array Systems QuickSpecs below to determine configuration requirements	External	Please see the XP Disk Array Systems Quick Specs for the latest list of supported HBAs

HP XP10000 Disk Array:
http://h18006.www1.hp.com/products/storageworks/xp10000/index.html (Worldwide)

Enterprise Virtual Array Systems	Please see the XP Disk Array Systems QuickSpecs below to determine configuration requirements	External	Please see the XP Disk Array Systems Quick Specs for the latest list of supported HBAs

HP Enterprise Virtual Array Family:
http://h18006.www1.hp.com/products/quickspecs/12408_div/12408_div.html (Worldwide)

System Unit	**Dimensions** (H x W x D) (with bezel)	7.154 x 2.19 x 20.058 in (18.17 x 5.56 x 50.95 cm)	
	Weight (approximate)	Maximum (all hard drives and processors installed)	16.5 lb (7.5 kg)
		Minimum (one hard drive and processor installed)	10.75 lb (4.87 kg)
	Power Specifications	For power specifications including Input Requirements, BTU Rating, and Power Supply Output, please see the HP BladeSystem c-Class Enclosures QuickSpecs located at URL: HP BladeSystem c3000 Enclosure QuickSpecs: http://h18000.www1.hp.com/products/quickspecs/12790_div/12790_div.html HP BladeSystem c7000 Enclosure QuickSpecs: http://h18000.www1.hp.com/products/quickspecs/12810_div/12810_div.html To review typical system power ratings use the HP BladeSystem Power Sizer which is available via the online tool located at URL: http://www.hp.com/go/bladesystem/powercalculator	
	System Inlet Temperature	Operating	10° to 35°C (50° to 95°F) at sea level with an altitude derating of 1.0°C per every 305 m (1.8°F per every 1000 ft) above sea level to a maximum of 3050 m (10,000 ft), no direct sustained sunlight. Maximum rate of change is 10°C/hr (18°F/hr). The upper limit may be limited by the type and number of options installed. System performance may be reduced if operating with a fan fault or above 30°C (86°F).
		Non-operating	-30° to 60°C (-22° to 140°F). Maximum rate of change is 20°C/hr (36°F/hr).
	Relative Humidity (non-condensing)	Operating	10 to 90% relative humidity (Rh), 28°C (82.4°F) maximum wet bulb temperature, non-condensing.
		Non-operating	5 to 95% relative humidity (Rh), 38.7°C (101.7°F) maximum wet bulb temperature, non-condensing.
	Altitude	Operating	3050 m (10,000 ft). This value may be limited by the type and number of options installed. Maximum allowable altitude change rate is 457 m/min (1500 ft/min).
		Non-operating	9144 m (30,000 ft). Maximum allowable altitude change rate is 457 m/min (1500 ft/min).
	Acoustic Noise	For acoustic noise specifications, please see the HP BladeSystem c-Class Enclosures QuickSpecs located at URL:	

		HP BladeSystem c3000 Enclosure QuickSpecs: http://h18000.www1.hp.com/products/quickspecs/12790_div/12790_div.html HP BladeSystem c7000 Enclosure QuickSpecs: http://h18000.www1.hp.com/products/quickspecs/12810_div/12810_div.html
HP Smart Array P410i Controller	Disk Drive Interface	3Gb (6Gb Capable) SAS (Serial Attached SCSI) 1.5Gb (3Gb Capable) SATA (Serial Advanced Technology Attachment)
	Server Interface	x4 PCI Express host interface
	Cache Memory	0 MB (none) standard Optional 256MB, 512MB, or 1GBCache Memory
	Logical Drives Supported	2 (with standard 0MB cache)
	Maximum Logical Drive Capacity	32 (with optional 256MB cache) 64 (with optional 512MB cache)
	Host Memory Addressing	64-bit, supporting servers memory space greater than 4 GB
	RAID Support	RAID 1(Mirroring) RAID 0 (Striping)
	Upgradeable Firmware	Controller: Upgradeable Firmware with Recovery ROM feature Online Drive Flash (with SAS drives) requires 256MB, 512MB, or 1GB module
Embedded NC532i Dual Port Flex-10 10GbE Multifunction Server Adapter	Type	Integrated dual-port KR 10GbE
	Network Processor	Broadcom 57711
	Data Transfer Method	x4 PCI Express Generation 2
	Network Transfer Rate	Two ports, each at 20 Gbps full duplex; 40 Gbps aggregate full duplex theoretical bandwidth NOTE: Each port is autosensing 1 Gb / 10 Gb, and can interoperate with 1 Gb HP BladeSystem c-Class interconnect components. NOTE: Each port on the NC532i adapter transmits from the server at only 20 Gbps (theoretical) full duplex.
	IEEE Compliance	802.1p QoS, 802.1Q VLAN tagging, 802.3ad link aggregation, 802.3ap 10GBase-KR, and 802.3x flow control
	Standard Features	• ProLiant Teaming including Network Fault Tolerance, Transmit Load Balancing, and Switch-Assisted Load Balancing • 4K Jumbo frames • Microsoft Windows Receive Side Scaling (RSS) • Optional Accelerated iSCSI

Environment-friendly Products and Approach	End-of-life Management and Recycling	Hewlett-Packard offers end-of-life HP product return, trade-in, and recycling programs in many geographic areas. For trade-in information, please go to: http://www.hp.com/go/green. To recycle your product, please go to: http://www.hp.com/go/green or contact your nearest HP sales office. Products returned to HP will be recycled, recovered or disposed of in a responsible manner. The EU WEEE directive (2002/95/EC) requires manufacturers to provide treatment information for each product type for use by treatment facilities. This information (product disassembly instructions) is posted on the Hewlett Packard web site at: http://www.hp.com/go/green. These instructions may be used by recyclers and other WEEE treatment facilities as well as HP OEM customers who integrate and re-sell HP equipment.

© Copyright 2011 Hewlett-Packard Development Company, L.P.

The information contained herein is subject to change without notice.

Microsoft and Windows NT are US registered trademarks of Microsoft Corporation. Intel, the Intel logo, Xeon and Xeon Inside are trademarks of Intel Corporation in the U.S. and other countries.

The only warranties for HP products and services are set forth in the express warranty statements accompanying such products and services. Nothing herein should be construed as constituting an additional warranty. HP shall not be liable for technical or editorial errors or omissions contained herein.

For hard drives, 1GB = 1 billion bytes. Actual formatted capacity is less.