Overview

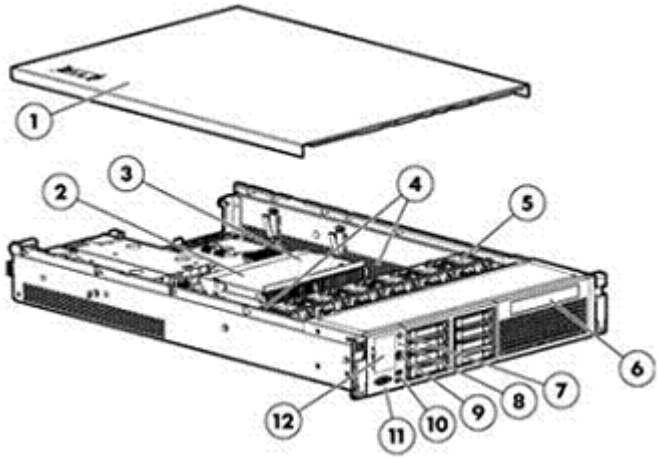

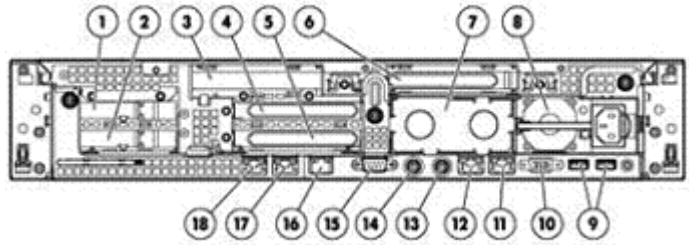

Front View:

1. Quick removal access panel
2. Intel Six or Quad-Core Processor
3. Second Intel Processor
4. Eighteen slots: DDR3 Registered (RDIMM) memory
5. Hot-plug fans, full N+1 redundancy
6. Slim Optical Bay (SATA DVD-RW Optical Drive)
7. UID LED button
8. Health LED
9. Power On/Standby button and system power LED
10. USB connectors (2)
11. Video connector
12. Systems Insight Display

Rear View:

1. PCI slot 5
2. PCI slot 6
3. PCI slot 4
4. PCI slot 2
5. PCI slot 3
6. PCI slot 1
7. Power supply 2
8. Power supply 1
9. USB connectors (2)
10. Video connector
11. NIC 1 connector
12. NIC 2 connector
13. Mouse connector
14. Keyboard connector
15. Serial connector
16. iLO2 connector
17. NIC 3 connector
18. NIC 4 connector

At A Glance

The HP ProLiant DL380 G6 Carrier Grade Server continues to deliver on its heritage of engineering excellence with increased flexibility and performance, enterprise-class uptime and manageability, 2-socket Intel Xeon performance, and 2U density for a variety of applications. The Carrier Grade version supports a sub-set of the options offered on the standard HP ProLiant DL380 G6, the sub-set are listed in this document. NEBS testing was conducted utilizing the X5570 processor, processor of the same Intel Xeon 5500 sequence are considered to be NEBS Level 3 compliant. The AC 1200 watt HE and -48VDC 1200 watt power supplies have both been NEBS Level 3 certified. The HP ProLiant DL380 G6 Carrier Grade requires the installation of the Fan Accessory kit (581031-B21). NEBS Level 3 certified (as specified in Telecordia SR-3580).

- Processors:
  - Up to 2 Six or Quad-Core Intel® Xeon® processor 5500/5600 sequence)
  - Intel® 5520 Chipset

Overview

- Memory:
  - Up to 128GB, using 8GB dual rank PC3-8500R DDR3 Registered (RDIMM) memory, operating at 800MHz when fully populated at 3 DIMMs per Channel in 16 slots
    NOTE: If only one processor is installed, only half the DIMM slots are available
- Storage Controller:
  - Base Models: HP Smart Array P410i/256 MB Controller (RAID 0/1/1+0/5/5+0)
  - Available upgrades: 256MB, 512MB, or 1GB flash with BBWC, Battery kit upgrade (for BBWC), and Smart Array Advanced Pack (SAAP)
- Internal Drive Support:
  - Standard (8) small form factor (SFF) hot-plug drive bays to support Serial-attached SCSI (SAS)
  - Optional - second 8 SFF drive bay
  - Slimline media bay supporting Optical Drive
- Network Controller:
  - Two HP NC382i Dual Port Multifunction Gigabit Server Adapters (four ports total) with TCP/IP Offload Engine, including support for Accelerated iSCSI
- Expansion Slots:
  - Six available PCI-Express slots, optional mixed PCI-X / PCI-Express or x16 PCI configurations available (see "Standard Features -Expansion Slots" section for more details)
- Ports:
  - USB 2.0 support
  - 5 total ports: (2) ports up front; (2) ports in back; (1) port internal
  - 1 internal Secure Digital (SD) slot
- Integrated Hypervisors (Optional):
  - VMware 3i virtualization technology
  - Citrix XenServer virtualization technology
- Redundancy:
  - Fully redundant hot plug fans (N+1)
  - Hot plug power supply with optional redundancy (Included in Performance models)
- Power Sources:
  - Dual Common Slot Bay for Hot plug and Redundant Power options
    - HP -48V DC 1200 watt Power Supply
    - HP AC1200 watt HE Power Supply
- Management:
  - HP Insight Control suite delivers essential management, including proactive health management, lights out remote control, optimization of power usage, rapid server deployment, performance analysis, vulnerability scanning and patch management and virtual machine management. Now with Dynamic Power Capping technology, ICE can potentially triple the capacity of your data center by reclaiming trapped power and cooling capacity. For more information, go to: www.hp.com/go/ice.
  - HP ProLiant Onboard Administrator (powered by the Integrated Light-Out 2 management processor) for simplified server setup, health monitoring and recovery, power and thermal control, and lights-out remote administration
  - Integrated Lights-Out 2 Advanced unlocks the full capabilities of the ProLiant Onboard Administrator with high performance Integrated Remote Console, multi-user console sharing, video record and replay, and virtual media, including virtual folders for rapid server updates.
  - System Insight Display on the front bezel for quick and easy server diagnostics
- Form Factor:
  - Rack (2U), (3.5-inch); Depth 27.25 inches (69.98 cm)
- Deployment/Serviceability:
  - Quick Deploy Rail System includes sliding universal rails, an ambidextrous cable management arm and quick release levers for fast and easy serviceability
  - Tool-less access to all system components for easy in rack serviceability
  - Customer Self Repair (CSR): HP products are designed with many CSR parts to minimize repair time and allow for greater flexibility in performing defective parts replacement

Overview

- Warranty:
  - This product is covered by a global limited warranty and supported by HP Services and a worldwide network of HP Authorized Channel Partners resellers. Hardware diagnostic support and repair is available for three years from date of purchase. Support for software and initial setup is available for 90 days from date of purchase. Enhancements to warranty services are available through HP Care Pack services or customized service agreements. SATA hard drives have a one-year warranty. SAS Enterprise drives have a three-year warranty.
    NOTE: Server Warranty includes 3-Year Parts, 3-Year Labor, 3-Year Onsite support with next business day response. Warranty repairs may be accomplished through the use of Customer Self Repair (CSR) parts. These parts fall into two categories: 1) Mandatory CSR parts are designed for easy replacement. A travel and labor charge will result when customers decline to replace a Mandatory CSR part; 2) Optional CSR parts are also designed for easy replacement but may involve added complexity. Customers may choose to have HP replace Optional CSR parts at no charge. Additional information regarding worldwide limited warranty and technical support is available at:
    http://h18004.www1.hp.com/products/servers/platforms/warranty/index.html

Configuration Information - Factory Integrated Models

NOTE: This section lists some of the steps required to configure a Factory Integrated Model. To ensure only valid configurations are ordered, HP recommends the use of an HP approved configurator. Contact your local sales representative for information on CTO product offerings and requirements.
NOTE: HP does not allow factory integration of options into standard models listed above. Configure-to-order servers must start with a CTO Chassis.
NOTE: FIO indicates that this option only available as a Factory Installable Option.

Step 1: Base Configuration (choose one of the following configurable models)

Models	HP DL380R06 CTO Chassis	494329-B21

Factory Integrated Model ships with:

Two HP NC382i Dual Port Multifunction Gigabit Server Adapters
Smart Array P410i Controller
I/O slots - 3 Slots come standard:

- Slot 1 - FL/FH x8 PCIE (x16 connector)
- Slot 2 - HL/FH x4 PCIE (x8 connector)
- Slot 3 - HL/FH x4 PCIE (x8 connector)
  - Additional Slots may be added via selections from the PCI Information and Options subsection

System Fans - 4 (2 additional fans include in Fan accessory kit 58103-B21, require for NEBS certification)
Drive Cage - 8-SFF (Second SFF drive cage optional)
USB - 2 Rear, 2 Front, 1 Internal, 1 SD slot
Server Management - (iLO2) (embedded)
NOTE: Power Supply not included - choose from Options section

Fan Accessory Kit (Required for NEBS certification)	581031-B21

Step 2: Choose Required Options (only one of the following from each list unless otherwise noted)

Processors	Six Core Processors	
	Intel® Xeon® Processor E5650 (2.33 GHz,124MB L3 Cache, 95W, DDR3-1333,HT, Turbo 2/2/3/3/), FIO	587482-L21
	Intel® Xeon® Processor E5660 (2.80 GHz, 12MB L3 Cache, 95W, DDR3-1333, HT, Turbo 2/2/3/3), FIO	587491-L21
	Intel® Xeon® Processor E5670 (2.93 GHz, 12MB L3 Cache, 95W, DDR3-1333, HT, Turbo 2/2/3/3), FIO	587393-L21
	Quad-Core Processors	
	Intel® Xeon® Processor E5504 (2.00 GHz, 4MB L3 Cache, 80W, DDR3-800), FIO	492136-L21
	Intel® Xeon® Processor E5506 (2.13 GHz, 4MB L3 Cache, 80W, DDR3-800), FIO	492131-L21
	Intel® Xeon® Processor E5520 (2.26 GHz, 8MB L3 Cache, 80W, DDR3-1066, HT, Turbo 1/1/2/2), FIO	492239-L21
	Intel® Xeon® Processor E5530 (2.40 GHz, 8MB L3 Cache, 80W, DDR3-1066, HT, Turbo 1/1/2/2), FIO	492237-L21
	Intel® Xeon® Processor E5540 (2.53 GHz, 8MB L3 Cache, 80W, DDR3-1066, HT, Turbo 1/1/2/2), FIO	492244-L21

	Intel® Xeon® Processor X5550 (2.66 GHz, 8MB L3 Cache, 95W, DDR3-1333, HT, Turbo 2/2/3/3), FIO	492234-L21
	Intel® Xeon® Processor X5560 (2.80 GHz, 8MB L3 Cache, 95W, DDR3-1333, HT, Turbo 2/2/3/3), FIO	492232-L21
	Intel® Xeon® Processor X5570 (2.93 GHz, 8MB L3 Cache, 95W, DDR3-1333, HT, Turbo 2/2/3/3), FIO	500094-L21
	NOTE: All DDR3 memory option kits consist of one DIMM per kit. For detailed memory configuration rules and guidelines, please use the Online DDR3 Memory Configuration Tool: www.hp.com/go/ddr3memory-configurator. NOTE: Kits described as LP include Low Power DIMMs. For more information on ProLiant Energy Efficient Features, see: http://h18004.www1.hp.com/products/servers/platforms/energyefficient/	
Power Supplies	The NEBS certified HP ProLiant DL380 G6 only support s 1200 Watt AC and 1200 Watt -48VDC power supplies	
	HP 1200W -48V DC Common Slot Power Supply	437573-B21
	HP 1200W AC Common Slot power Supply	500172-B21
	NOTE: DC power supplies contain a -48V DC power cord designed for in rack DC power rectifiers. AC power supplies do not include power cords.	

Step 3: Choose Additional Factory Integrate-able Options (only one of the following from each list unless otherwise noted)

Controllers	NOTE: If Additional Memory Cache Module or Controller is Required please pick one of the following:	
	HP 256 MB P-series cache module FIO NOTE: Available for P410i only.	534108-B21
	512MB BBWC	462967-B21
	HP 1GB Flash backed cache	534562-B21
Integrated hypervisor (iHV)	NOTE: HP VMware ESXi free download from www.software.hp.com - select Virtualization.	
	HP VMware 3i Enterprise 2p Lic SW NOTE: For additional information and options kits, please see the QuickSpecs at: www.hp.com/go/vmware.	430341-B21
	NOTE: HP XenServer Select Edition free Download from: http://h20392.www2.hp.com/portal/swdepot/displayProductInfo.do?productNumber=HPXS	
	HP Essentials -XenServer Platinum Nm Lic	530753-B21
	HP ProLiant Virtual Console Full License	508293-B21
	XenServer HP Ent Upg iSW Lic	464676-B21
	HP Citrix Essentials for XenServer Enterprise Edition NOTE: For additional information and options kits, please see the HP Citrix Essentials for XenServer QuickSpecs at: www.hp.com/go/citrix	508294-B21

Step 4: Choose Additional Options for Factory Integration

NOTE: For additional options, please refer to the "Core Options and Additional Options" section below.

Core Options

NOTE: Some options may not be integrated at the factory. Contact your local sales representative for additional information.

DL380 G6 Unique Options	HP DL380G6 3 Slot PCI-E Riser Kit	500579-B21
	HP 8 SFF Hot Plug drive bay	516914-B21
Processors	**Six -Core Processors**	
	Intel® Xeon® Processor X5650 (2.66 GHz, 12MB L3 Cache, 95W, DDR3-1333, HT, Turbo 2/2/3/3)	587482-B21
	Intel® Xeon® Processor X5660 (2.80 GHz, 12MB L3 Cache, 95W, DDR3-1333, HT, Turbo 2/2/3/3)	587491-B21
	Intel® Xeon® Processor X5670 (2.93 GHz, 12MB L3 Cache, 95W, DDR3-1333, HT, Turbo 2/2/3/3)	587493-B21
	Quad-Core Processors	
	Intel® Xeon® Processor E5504 (2.00 GHz, 4MB L3 Cache, 80W, DDR3-800)	492136-B21
	Intel® Xeon® Processor E5506 (2.13 GHz, 4MB L3 Cache, 80W, DDR3-800)	492131-B21
	Intel® Xeon® Processor E5520 (2.26 GHz, 8MB L3 Cache, 80W, DDR3-1066, HT, Turbo 1/1/2/2)	492239-B21
	Intel® Xeon® Processor E5530 (2.40 GHz, 8MB L3 Cache, 80W, DDR3-1066, HT, Turbo 1/1/2/2)	492237-B21
	Intel® Xeon® Processor E5540 (2.53 GHz, 8MB L3 Cache, 80W, DDR3-1066, HT, Turbo 1/1/2/2)	492244-B21
	Intel® Xeon® Processor X5550 (2.66 GHz, 8MB L3 Cache, 95W, DDR3-1333, HT, Turbo 2/2/3/3)	492234-B21
	Intel® Xeon® Processor X5560 (2.80 GHz, 8MB L3 Cache, 95W, DDR3-1333, HT, Turbo 2/2/3/3)	492232-B21
	Intel® Xeon® Processor X5570 (2.93 GHz, 8MB L3 Cache, 95W, DDR3-1333, HT, Turbo 2/2/3/3)	500094-B21
Memory	**Registered DIMMs (RDIMMs)**	
	HP 2GB 2Rx8 PC3-10600R-9 Kit (Max 18 for NEBS)	500656-B21
	HP 4GB 2Rx4 PC3-10600R-9 Kit (Max 14 for NEBS)	500658-B21
	HP 4GB 4Rx8 PC3-8500R-7 LP K it (Max 12 for NEBS)	500660-B21
	HP 8GB 2Rx4 PC3-10600R-9 Kit (Max 16 for NEBS)	500662-B21
	HP 16GB4Rx4 PC3-8500R-7 Kit (Max 10 for NEBS)	500666-B21
	Unbuffered with ECC DIMMs (UDIMMs)	
	Not NEBS tested	
	NOTE: All DDR3 memory option kits consist of one DIMM per kit. For detailed memory configuration rules and guidelines, please use the Online DDR3 Memory Configuration Tool: www.hp.com/go/ddr3memory-configurator. NOTE: Kits described as LP include Low Power DIMMs. For more information on ProLiant Energy Efficient Features, see: www.hp.com/go/proliant-energy-efficient	

Core Options

Optical Drives	HP Slim SATA DVD RW Optical Drive	481043-B21
Hard Drives	NOTE: Transfer rates of drives are dependent on the maximum transfer rate supported by the HBA or Controller. Refer to the HBA or Controller technical specifications for details.	
	SAS Hot Plug SFF Enterprise (ENT) Drives	
	HP 300GB 6G SAS 10K SFF DP ENT HDD	507127-B21
	HP 300GB 3G SAS 10K SFF DP ENT HDD	492620-B21
	HP 146GB 6G SAS 10K SFF DP ENT HDD	507125-B21
	HP 146GB 3G SAS 10K SFF DP ENT HDD	418367-B21
	HP 146GB 3G SAS 15K SFF DP ENT HDD	504062-B21
	HP 72GB 6G SAS 15K SFF DP ENT HDD	5125451-B21
	HP 72GB 3G SAS 10K SFF DP ENT HDD	384842-B21
	HP 36GB 3G SAS 15K SFF DP ENT HDD	418369-B21
	NOTE: SAS Enterprise drives have a 3-year warranty. Please see the QuickSpecs for Technical Specifications and additional information: http://h18000.www1.hp.com/products/quickspecs/12244_div/12244_div.html (Worldwide)	
	SATA Hot Plug Midline (MDL) Solid State Drives	
	HP 60GB 3G SATA (2.5 inch) Midline, 1yr warranty Solid State Drive	572071-B21
	HP 120GB 3G SATA (2.5 inch) Midline, 1yr warranty Solid State Drive	572073-B21
Communications	HP NC360T PCI Express Dual Port Gigabit Server Adapter	412648-B21
	HP NC364T PCI Express Quad Port Gigabit Server Adapter NOTE: Does not support Windows 2000.	435508-B21
	HP NC365T PCI Express Quad Port Gigabit Server Adapter	593722-B21
	HP NC382T PCI Express Dual Port Multifunction Gigabit Server Adapter	458492-B21
	HP NC550SFP Dual Port 10GbE Server Adapter NOTE: A minimum of two gigabyte (2 GB) of server memory is required per each NC522SFP adapter. NOTE: Please see the QuickSpecs for Technical Specifications and additional information: www.hp.com/go/ProLiantNICs	581201-B21
Riser Cage Options	HP DL380G6 3 Slot PCI-E Riser Kit	500579-B21
Redundant Options	CAUTION: In ProLiant Servers that have more than one power slot (bay), only same size power supplies are recommended. If non-matched power supplies are inserted you will get errors and operation will fail.	
	HP 1200W-48V DC Common Slot Power Supply NOTE: DC power supplies contain a -48V DC power cord designed for in rack DC power rectifiers.	437573-B21
	HP 1200W CS HE Power Supply Kit	500172-B21

Additional Options

HP Insight Control Suite	NOTE: Electronic licensing options are available for Insight Control suites software products. Please see the appropriate Insight Control QuickSpecs for additional information. www.hp.com/go/ice	
	HP Insight Control Suite	
	HP Insight Control suite, No Media 1-Server License including 1 year of 24x7 Technical Support and Updates NOTE: This part number can be purchased as a single license or as multiple licenses with a single activation key. Customer will receive a license entitlement certificate via e-mail. The license entitlement certificate must be redeemed online or via fax in order to obtain the license activation key(s). Includes one year of 24 x 7 HP Software Technical Support and Update Service.	452148-B22
	HP Insight Software Media Kit NOTE: Insight Software DVD media without licenses. Contains Insight Manager and Insight Software products and components licensed by Insight Control suite. Uses an integrated installer to perform quick and accurate software installation and updates. NOTE: For additional License Kits, please see the QuickSpecs at: http://h18000.www1.hp.com/products/quickspecs/12631_div/12631_div.html	436222-B21
	HP Insight Control Linux Edition	
	HP Insight Control Environment for Linux, Media pack (DVD) - No licenses included NOTE: This optional Media pack DVD contains the ISO image for HP Insight Control Environment for Linux, HP System Insight Manager, HP Insight Power Manager, HP Insight Virtual Machine Manager software for ProLiant, and an integrated installer. Servers must be acquired separately. NOTE: This Media pack is optional because the latest ISO image and latest updates may be downloaded at no cost from: http://www.hp.com/go/ice-linux (click on Download button).	464422-B22
	HP Insight Control Environment for Linux, No Media, 1-Server license, including one year of 24x7 Technical Support and Updates NOTE: This part number can be used to purchase one (1) license with a single activation key. Customer will receive a printed license entitlement certificate via physical shipment. The license entitlement certificate must be redeemed online or via fax in order to obtain the license activation key(s). Includes one year of 24 x 7 HP Software Technical Support and Update Service. NOTE: One certificate is shipped for each license. NOTE: For additional License Kits, please see the QuickSpecs at: http://h18000.www1.hp.com/products/quickspecs/13019_div/13019_div.html	464423-B22
Server Management Stand Alone Software	NOTE: Electronic licensing options are available for select software products. Please see the appropriate Insight Software standalone product QuickSpecs for additional information.	
	Deploy	
	HP Insight Rapid Deployment software	
	HP Insight Rapid Deployment software No Media 1-Server License including 1 year of 24x7 Technical Support and Updates NOTE: This license allows 1 server to be deployed and managed via RDP. Customer will receive a printed license entitlement certificate via physical shipment. The license entitlement certificate must be redeemed online or via fax in order to obtain the	452151-B21

Additional Options

license activation key(s). Includes one year of 24 x 7 HP Software Technical Support Service NOTE: For additional License Kits, please see the QuickSpecs at: http://h18000.www1.hp.com/products/quickspecs/11053_div/11053_div.html	
HP Insight Server Migration software for ProLiant	
HP Insight Server Migration software for ProLiant, No Media, Physical / Virtual to ProLiant Single Migration License, including 1 year of 24x7 Technical Support and Updates NOTE: This license allows 1 physical to ProLiant or virtual to ProLiant migration. Customer will receive a printed license entitlement certificate and documentation via physical shipment. The license entitlement certificate must be redeemed online or via fax in order to obtain the license activation key(s). Includes one year of 24 x 7 HP Software Technical Support and Update Service.	460750-B21
HP Insight Server Migration software for ProLiant, No Media, Physical / Virtual to Virtual Single Migration License, including 1 year of 24x7 Technical Support and Updates NOTE: This license allows 1 physical to virtual or virtual to virtual migration. Customer will receive a printed license entitlement certificate and documentation via physical shipment. The license entitlement certificate must be redeemed online or via fax in order to obtain the license activation key(s). Includes one year of 24 x 7 HP Software Technical Support and Update Service.	460753-B21
HP Insight Server Migration software for ProLiant, No Media, 1-Year Unlimited Migration License, including 1 year of 24x7 Technical Support NOTE: This license allows unlimited migrations (physical to ProLiant, physical to virtual, virtual to virtual, and virtual to ProLiant) for one year. Customer will receive a printed license entitlement certificate and documentation via physical shipment. The license entitlement certificate must be redeemed online or via fax in order to obtain the license activation key(s). Includes one year of 24 x 7 HP Software Technical Support Service. NOTE: For additional License Kits, please see the QuickSpecs at: http://h18000.www1.hp.com/products/quickspecs/12855_div/12855_div.html	460756-B21
Monitor	
HP Insight Dynamics-VSE suite for ProLiant	
HP Insight Dynamics-VSE with Insight Control Environment, 1-server license including 1 year of 24x7 Technical Support and Updates NOTE: This license supports HP ProLiant ML/DL servers and c-Class Blade servers. Customer will receive a printed license entitlement certificate via physical shipment.	483527-B21
HP Insight Dynamics-VSE without Insight Control Environment, 1-server license including 1 year of 24x7 Technical Support and Updates NOTE: This license supports HP ProLiant ML/DL and c-Class Blade servers. Customer will receive via email a receipt and link to a license entitlement certificate. NOTE: For additional License Kits, please see the QuickSpecs at: http://h18000.www1.hp.com/products/quickspecs/13050_div/13050_div.html	483531-B21
Control	
Integrated Lights-Out Advanced Pack	

Additional Options

	HP Integrated Lights-Out Advanced Pack, No Media, 1-Server License, including 1 year of 24x7 Technical Support and Updates NOTE: For additional License Kits, please see the QuickSpecs at: http://h18000.www1.hp.com/products/quickspecs/12362_div/12362_div.html	512485-B21
	HP Insight Control Environment iLO Advanced Upgrade, No Media, 1-Server License including one year of 24x7 support NOTE: For use in environments where iLO Advanced Pack is already installed and licensed. Customer will receive a printed license entitlement certificate via physical shipment. The license entitlement certificate must be redeemed online or via fax in order to obtain the license activation key(s). Includes one year of 24 x 7 HP Software Technical Support and Update Service. NOTE: For additional License Kits, please see the QuickSpecs at: http://h18000.www1.hp.com/products/quickspecs/12631_div/12631_div.html	506503-B21
	Optimize	
	Accelerated iSCSI Pack	
	Accelerated iSCSI Pack, No Media, Single License NOTE: For use with a single NIC port. Contains one license with a unique license activation key and documentation. NOTE: For additional License Kits, please see the QuickSpecs at: http://h18000.www1.hp.com/products/quickspecs/12466_div/12466_div.html	452679-B21
	HP Insight Power Manager software (IPM)	
	HP Insight Power Manager software, No Media, 1-Server License, including 1 year of 24x7 Technical Support and Updates NOTE: Customers purchasing this upgrade must already have an iLO Advanced or Select license on each managed server. Customer will receive a printed license entitlement certificate via physical shipment. The license entitlement certificate must be redeemed online or via fax in order to obtain the license activation key(s). Includes one year of 24 x 7 HP Software Technical Support and Update Service. NOTE: For additional License Kits, please see the QuickSpecs at: http://h18000.www1.hp.com/products/quickspecs/12623_div/12623_div.html	452677-B21
	HP Insight Virtual Machine Manager software for ProLiant	
	HP Insight Virtual Machine Manager software for ProLiant, No Media, 1-Server License, including 1 year of 24x7 Technical Support and Updates NOTE: Customer will receive a printed license entitlement certificate via physical shipment. The license entitlement certificate must be redeemed online or via fax in order to obtain the license activation key(s). Includes one year of 24 x 7 HP Software Technical Support and Update Service. NOTE: For additional License Kits, please see the QuickSpecs at: http://h18000.www1.hp.com/products/quickspecs/12328_div/12328_div.html NOTE: Flexible and volume quantity license kits are available for Value Packs. Refer to: http://www.hp.com/servers/proliantessentials or the various QuickSpecs for more information.	452153-B21
Security	HP Trusted Platform Module Option Kit	Not NEBS tested

Additional Options

Storage Controllers	SAS Controller	
	Smart Array P410 Controller	
	HP Smart Array P410/256 MB Controller	462862-B21
	HP Smart Array P410/512 MB with BBWC Controller	462864-B21
	512MB BBWC	462967-B21
	1GB Flash backed Write Cache	534562-B21
	NOTE: Please see the QuickSpecs for Technical Specifications and additional information: http://h18000.www1.hp.com/products/quickspecs/13202_div/13202_div.html (Smart Array P411 Controller)	
	SAS HBA	
	HP SC08e 6G 2 port SAS Host Bus Adapter	614988-B21
	HP SC08GE SAS Controller	488765-B21
High Availability Cluster Options	HP Serviceguard for Linux	
	HP Serviceguard Linux for HP ProLiant/x86 Servers Licensed per physical server Includes media and One Year 24x7 Software Support & Updates	463831-B21
	HP Serviceguard Linux Oracle Database Toolkit for HP ProLiant/x86 Servers Licensed per cluster Includes media and One Year 24x7 Software Support & Updates	463833-B21
	HP Serviceguard Extension for SAP on Linux for HP ProLiant/x86 Servers Licensed per physical server Includes media and One Year 24x7 Software Support & Updates	463834-B21
	HP Serviceguard Linux Extended Distance Cluster (XDC) for HP ProLiant/x86 Servers Licensed per physical server Includes media and One Year 24x7 Software Support & Updates	463835-B21
	NOTE: The above is not a complete list of all HP Serviceguard for Linux product numbers For a detailed list of supported configuration/certification options for HP Serviceguard for Linux please refer to the HP Serviceguard for Linux Configuration & Ordering Guide available at: http://www.hp.com/go/sglx/info. NOTE: HP Serviceguard for Linux products running on x86 platforms now include one year of 24 x 7 Software Technical Support and Updates. Please see the Support Information section of the HP Serviceguard for Linux QuickSpecs for details. NOTE: For additional information including a complete list of Product Numbers for HP Serviceguard for Linux, please see the following QuickSpecs at: http://h18000.www1.hp.com/products/quickspecs/11518_div/11518_div.html (Worldwide)	

Additional Options

StorageWorks Options	StorageWorks Fibre Channel HBA	
	NOTE: For the complete listing of Fibre Channel Host Bus Adapters for Windows 2000, Windows Server 2003 and Linux, please see: http://h18006.www1.hp.com/storage/saninfrastructure/hba.html	
	HP StorageWorks 82E 8Gb Dual Port PCI-e Fibre Channel Bus Adapter	AJ763A
	HP StorageWorks 82Q 8Gb Dual Port PCI-e Fibre Channel Host Bus Adapter	AJ764A
USB Options (Not NEBS tested)	HP USB 2-Button Optical Scroll Mouse (Carbonite/Silver)	DC172B
	1.44MB External USB Floppy Drive	DC141B
	HP USB 04 Standard Keyboard	DT528A#ABA
HP Rack 10000 G2 Series (Carbon/Graphite Metallic) HP Rack 1000 G2 series are not Seismic Rated, are not included in the NEBS certification)	10642 G2 (42U) Rack Cabinet - Pallet	AF001A
	10642 G2 (42U) Rack Cabinet - Shock Pallet	AF002A
	10642 G2 (42U) Rack Cabinet - Crated	AF003A
	10642 G2 (42U) Rack Cabinet, with Extension - Shock Pallet	AF004A
	10636 G2 (36U) Rack Cabinet - Pallet	AF011A
	10636 G2 (36U) Rack Cabinet - Shock Pallet	AF012A
	10636 G2 (36U) Rack Cabinet - Crated	AF013A
	10636 G2 (36U) Rack Cabinet, with Extension - Shock Pallet	AF014A
	10622 G2 (22U) Rack Cabinet - Pallet	AF021A
	10622 G2 (22U) Rack Cabinet - Shock Pallet	AF022A
	10642 G2 (42U) Rack Cabinet 1200mm Deep - Shock Pallet	AF034A
	10642 G2 (42U) Rack Cabinet 1200mm Deep - Pallet	AF038A
	10842 G2 (42U) 800mm Wide Rack Cabinet - Pallet	AF041A
	10842 G2 (42U) 800mm Wide Rack Cabinet - Shock Pallet	AF042A
	10647 G2 (47U) Rack Cabinet - Pallet	AF031A
	HP S10614 (14U) Rack Cabinet - Shock Pallet	292302-B22
	10647 G2 (47U) Rack Cabinet 1200mm Deep - Shock Pallet	AF044A
	NOTE: Due to handling and shipping requirements, AF044A is only orderable through HP Factory Express. It is not for direct sales. Customer site surveys are required before an order is approved. CTO orders may require additional lead time.	
	10647 G2 (47U) Rack Cabinet 1200mm Deep - Pallet	AF045A
	NOTE: It is mandatory to use a shock pallet when shipping racks with equipment installed.	
	NOTE: xxxxxx-B22 (shock pallet) used to ship racks with equipment installed (by custom systems, VARs and Channels).	
	NOTE: Please see the QuickSpecs for Technical Specifications and additional information: http://h18000.www1.hp.com/products/quickspecs/12402_div/12402_div.html (Worldwide)	
	Telco Rack Support	
	DL380 Telco Rack Kit:	

Additional Options

Support for all 2-post Telco racks requires the use of the standard rack kit and an additional option kit from Rack Solutions (http://www.racksolutions.com/hp/)

Seismic Racking and Seismic cabinets are available; contact your HP salesperson for details.

Keyboards and Monitors (Not NEBS tested)	TFT7600 Rackmount Keyboard Monitor US	AG052A
	TFT7600 Rackmount Keyboard Monitor UK	AG053A
	TFT7600 Rackmount Keyboard Monitor GR	AG054A
	TFT7600 Rackmount Keyboard Monitor FR	AG055A
	TFT7600 Rackmount Keyboard Monitor IT	AG056A
	TFT7600 Rackmount Keyboard Monitor SP	AG057A
	TFT7600 Rackmount Keyboard Monitor DEN	AG058A
	TFT7600 Rackmount Keyboard Monitor NOR	AG059A
	TFT7600 Rackmount Keyboard Monitor SE/FI	AG060A
	TFT7600 Rackmount Keyboard Monitor SWI	AG061A
	TFT7600 Rackmount Keyboard Monitor PORT	AG062A
	TFT7600 Rackmount Keyboard Monitor BEL	AG063A
	TFT7600 Rackmount Keyboard Monitor JPN2	AG064A
	TFT7600 Rackmount Keyboard Monitor RUS	AG065A
	TFT7600 Rackmount Keyboard Monitor INTL	AG066A
	1U Rackmount Keyboard with USB, US	AG072A
	1U Rackmount Keyboard with USB, UK	AG073A
	1U Rackmount Keyboard with USB, GR	AG074A
	1U Rackmount Keyboard with USB, FR	AG075A
	1U Rackmount Keyboard with USB, ITL	AG076A
	1U Rackmount Keyboard with USB, SP	AG077A
	1U Rackmount Keyboard with USB, DEN	AG078A
	1U Rackmount Keyboard with USB, NOR	AG079A
	1U Rackmount Keyboard with USB, SE/FI	AG080A
	1U Rackmount Keyboard with USB, SWI	AG081A
	1U Rackmount Keyboard with USB, PORT	AG082A
	1U Rackmount Keyboard with USB, BEL	AG083A
	1U Rackmount Keyboard with USB, JPN2	AG084A
	1U Rackmount Keyboard with USB, RUS	AG085A
	1U Rackmount Keyboard with USB, INTL	AG086A

NOTE: For additional information regarding Rack Options, please see the following URL: http://www.hp.com/go/rackandpower.

Additional Options

HP KVM Switch Options (not NEBS tested)	2x1x16 IP Console Switch with Virtual Media	AF601A
	4x1x16 IP Console Switch with Virtual Media	AF602A
	2x16 Server Console Switch with Virtual Media	AF600A
	PS/2 Virtual Media Interface Adapter, 1 pack NOTE: Requires PS/2 and one USB port on server.	AF604A
	Server Console Switch (KVM), 0 x 1 x 8 port	336044-B21
	Server Console Switch (KVM), 0 x 2 x 16 port	336045-B21
	PS/2 Interface Adapter, 1 pack	262588-B21
	PS/2 Interface Adapter, 8 pack	262587-B21
	NOTE: Cat5e cables are required to connect Interface Adapters to Console Switches. Cat5e cables can be found at the following URL: http://www.hp.com/go/kvm.	
	HP 1x4 Console Switch	AF611A
	HP PS2 Server Console Cable, 6 foot, 2-Pack	AF612A
	HP USB Server Console Cable, 6 foot, 2-Pack NOTE: Required for supporting USB peripherals.	AF613A
	NOTE: For additional information regarding KVM switches, Serial Console servers, rack mount monitors, keyboards and all related options please see the following URL: http://www.hp.com/go/kvm.	

HP Serial Console Server Options (Not NEBS tested)	HP 16 Port Serial Console Server (worldwide)	AF101A
	HP 48 Port Serial Console Server (worldwide)	AF102A
	Serial Adapter, RJ45-DB9 DCE Female, 1 Pack	AF103A
	Serial Adapter, RJ45-DB9 DCE Female, 8 Pack	AF110A
	NOTE: Cat5e cables are required to connect Serial Adapters to Serial Console Servers. Additional Serial Adapters and Cat5e cables can be found at the following URL: http://www.hp.com/go/kvm.	
	NOTE: For additional information regarding KVM switches, Serial Console servers, rack mount monitors, keyboards and all related options please see the following URL: http://www.hp.com/go/kvm.	

Additional Options

Service and Support Offerings (HP Care Pack Services)	**Hardware Services On-site Service**	
	4-Hour On-site Service, 5-Day x 13-Hour Coverage, 3 Years, Electronic	U4544E
	4-Hour On-site Service, 7-Day x 24-Hour Coverage, 3 Years, Electronic	U4545E
	Hardware Services 6-Hour Call to Repair On-site Service	
	6-Hour Call to Repair, On-site Service, 7-Day x 24-Hour Coverage, 3 Years, Electronic	U4546E
	Installation & Start-up Services	
	Hardware Installation, Electronic	U4554E
	Installation & Start-Up of a ProLiant server and Microsoft or Linux O/S per the Customer Description and/or Data Sheet. To be delivered on a scheduled basis 8am-5pm, M-F, excl. HP holidays, Electronic	U4555E
	Installation and Startup for Essentials Rapid Deployment Pack, Electronic	U5683E
	Support Plus	
	Onsite HW support, 8am-9pm, M-F, 4hr response and Microsoft O/S SW Tech support offsite, onsite at HP's discretion, 8am-9pm, M-F 2hr response time excl. HP holidays, Electronic	U4556E
	Support Plus 24	
	Onsite HW support 24x7, 4hr response and Microsoft O/S SW Tech support offsite, onsite at HP's discretion, 24x7 2hr response time incl. HP holidays, Electronic	U4557E
	Onsite HW support 24x7, 4hr response and SuSE Linux SW Tech support offsite, onsite at HP's discretion, 24x7 2hr response time incl. HP holidays, Electronic	U6312E
	Onsite HW support 24x7, 4hr response and Red Hat ES Linux SW Tech support offsite, onsite at HP's discretion, 24x7 2hr response time incl. HP holidays, Electronic	U8334E
	NOTE: For more information, customer/resellers can contact: http://www.hp.com/services/carepack	

Memory

NOTE: Memory configurations listed do not apply to "Factory Integrated Models".

DDR3 memory population guidelines

For detailed memory configuration rules and guidelines, please use the Online DDR3 Memory Configuration Tool: www.hp.com/go/ddr3memory-configurator

Some DIMM installation guidelines are summarized below:

- For servers with eighteen (18) memory slots:
  - There are three (3) channels per processor; six (6) channels per server
  - There are three (3) DIMM slots for each memory channel; eighteen (18) total slots
  - Memory channel 1 consists of the three (3) DIMMs that are closest to the processor
  - Memory channel 3 consists of the three (3) DIMMs that are furthest from the processor
- DIMM slots that are white should be populated first
- Do not mix Unbuffered memory (UDIMMs) with Registered memory (RDIMMs)
- Do not install DIMMs if the corresponding processor is not installed
- If only one processor is installed in a 2CPU system, only half of the DIMM slots are available
- To maximize performance, balance the total memory capacity between all installed processors
- It is not required, but it is recommended to load the channels similarly if possible
- You can only have up to eight (8) ranks installed per channel
- You can only install two quad-rank DIMMs per channel
- You can only install two UDIMMs per channel; if available, the third slot in the channel must remain empty
- Populate DIMMs from heaviest load (quad-rank) to lightest load (single-rank) within a channel
- Heaviest load (DIMM with most ranks) within a channel goes furthest from the chipset
- For memory mirroring mode, channel 3 must be unpopulated. Channels 1 and 2 are populated identically
- For lock-step mode, channel 3 must be unpopulated. DIMMs in channels 1 and 2 will be installed in pairs. The paired slots will be 1,4; 2,5; 3;6 on a 3DPC system or 1,4; 2,5; on a 2DPC system
- No mixing DIMM voltage; all DIMMs must be the same voltage
- UDIMMS have not been NEBS tested
- NEBS certified configurations are limited to 72GB max.

DIMM Type ->	Registered Dimms (RDIMMs)						Unbuffered with ECC DIMMs (UDIMMs)			
DIMM Rank ->	Dual Rank (2R)			Quad Rank (4R)			Single Rank (1R)		Dual Rank (2R)	
DIMM Capacity ->	2GB	4GB	8GB	2GB	4GB	8GB	1GB	2GB	1GB	2GB
DIMM Native Speed (MHz) ->	1333	1333	1067	*	1067	*	*	*	*	*
SLOTS THAT CAN BE POPULATED										
18 slot servers	18	18	9	*	12	*	*	*	*	*
MAXIMUM CAPACITY (GB)										
18 slot servers	36	72	72	*	48	*	*	*	*	*
POPULATED DIMM SPEED (MHz)										
1 DIMM Per Channel	1333	1333	1067	*	1067	*	*	*	*	*
2 DIMM Per Channel	1067	1067	1067	*	800	*	*	*	*	*

Memory

3 DIMM Per Channel	800	800	800	*	*	*	*	*	*	*
* - not supported by HP at this time and/or not NEBS tested.										

NOTES:

- Mixing DIMM speeds is allowed, but the system processor speed rules always override the DIMM capabilities
- If you do mix DIMM speeds, the memory bus will default to the minimum clock rate of all DIMMs in the system - even if the slower DIMM is on the other processor
- If you install 1x 1066MHz DIMM in channel 1 and 1x 1333MHz DIMM in channel 2, you still run at 1066MHz
- If you install 1x 1066MHz DIMM in channel 1 and 5x 1333MHz DIMMs with 1 DIMM Per Channel (DPC) in each of the other channels, you run at 1066MHz
- If you install 3DPC in one channel (if applicable) and 1DPC in all other channels, you run at 800MHz
- 95 Watt CPU's are required for 1333MHz DIMM speeds. All other CPU's are capable of up to 1067MHz
- References to the above MHz speeds are for the various speeds of DDR3 DIMMs; 1333 refers to DDR3-1333, etc.

DIMM slot and configuration diagrams
Basic memory slot & population diagram

- Population order; start with "A" first, "B" second, "C" third, etc.

18 DIMM SLOTS (9 per CPU node)					
	CPU1		CPU2		
	slot #	population order	slot #	population order	
Chnl 1	1	G	1	G	Chnl 1
	2	D	2	D	
	3	A	3	A	
Chnl 2	4	H	4	H	Chnl 2
	5	E	5	E	
	6	B	6	B	
Chnl 3	7	I	7	I	Chnl 3
	8	F	8	F	
	9	C	9	C	

NOTE: Capacity references are rounded to the common Gigabyte values.

- 1GB = 1024MB
- 2GB = 2048MB
- 4GB = 4096MB
- 8GB = 8192MB

Memory

Following are memory options available from HP:

Memory	Registered DIMMs (RDIMMs)	
	HP 2GB 2Rx8 PC3-10600R-9 Kit	500656-B21
	HP 4GB 2Rx4 PC3-10600R-9 Kit	500658-B21
	HP 4GB 4Rx8 PC3-8500R-7 LP Kit	500660-B21
	HP 8GB 2Rx4 PC3-10600R-9	500662-B21
	HP 8GB 2Rx4 PC3-8500R-7 Kit	516423-B21
	HP 16GB 4Rx4 PC3-8500R-7	500666-B21
	Unbuffered with ECC DIMMs (UDIMMs)	
	Not NEBS tested	

NOTE: All DDR3 memory option kits consist of one DIMM per kit. For detailed memory configuration rules and guidelines, please use the Online DDR3 Memory Configuration Tool: www.hp.com/go/ddr3memory-configurator.
NOTE: Kits described as LP include Low Power DIMMs. For more information on ProLiant Energy Efficient Features, see: www.hp.com/go/proliant-energy-efficient

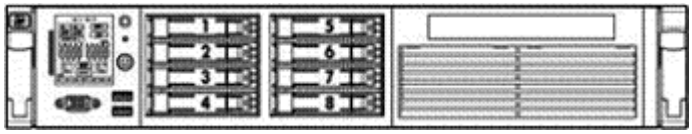

1-8 Eight SFF SAS hot plug hard drive bays

Drive Support

	Quantity Supported	Position Supported	Controller
Removable Media			
HP Slim SATA DVD RW Optical Drive NOTE: Included in performance models.	Only 1 available removable media bay	Slimline bay	Integrated SATA NOTE: Optional

Hard Drives

NOTE: Transfer rates of drives are dependent on the maximum transfer rate supported by the HBA or Controller. Refer to the HBA or Controller technical specifications for details.

SAS Hot Plug SFF Enterprise (ENT) Drives

	Quantity Supported	Position Supported	Controller
300GB 3G SAS 10K DP 300GB 6G SAS 10K DP 146GB 6G SAS 10K DP 146GB 3G SAS 15K DP 146GB 3G SAS 10K DP 72GB 3G SAS 10K DP 72GB 3G SAS 15K DP 36GB 3G SAS 15K DP	Up to 16	1-16	HP Smart Array P410/256 MB Controller HP Smart Array P410/512 MB BBWC Controller

External Storage

	Quantity Supported	Position Supported	Host Controller or Adapter
HP 2000sa Modular Smart Array Controller	Up to 4	External	HP SC08Ge Host Bus Adapter

Power Specifications

HP 1200W PSU -48VDC Input Part Number	437573-B21		
Input Voltage Range (DCV)	36-72		
Frequency Range (Nominal) (Hz)	DC		
Nominal Input Voltage (VDC)	-36	-48	-72
Maximum Rated Output Wattage	1200	1200	1200
Nominal Input Current (ACD)	38	28	19
Max Rated Input Wattage Rating (Watts)	1380	1350	1365
Max. Rated VA (Volt-Amp)	1380	1350	1365
Efficiency (%) at Max. Rated Output Wattage	87	89	88
Power Factor	N/A	N/A	N/A
Leakage Current (mA)	N/A	N/A	N/A
Max. Inrush Current (A peak)	20	25	35
Max. Inrush Current duration (mS)	1	1	3
Maximum British Thermal Unit Rating (BTU-Hr)	4713	4610	4662

HP 1200W Power Supply Part Number - AC	500172-B21						
Operational Input Voltage Range (Vrms)	100 to 240						
Frequency Range (Nominal) (Hz)	50/60						
Nominal Input Voltage (Vrms)	100	120	208	200	220	230	240
Maximum Rated Output Wattage	800	900	1200	1200	1200	1200	1200
Nominal Input Current (A rms)	9.7	9.0	7.0	6.8	6.4	9.1	5.9
Max Rated Input Wattage Rating (Watts)	930	1034	1348	1348	1348	1348	1348
Max. Rated VA (Volt-Amp)	970	1079	1406	1406	1406	1406	1406
Efficiency (%) at Max. Rated Output Wattage	86	87	89	89	89	89	89
Power Factor	0.97	0.97	0.97	0.97	0.97	0.97	0.97
Leakage Current (mA)	0.42	0.50	0.83	0.87	0.92	0.96	1.00
Max. Inrush Current (A peak)	30	30	30	30	30	30	30
Max. Inrush Current duration (mS)	20	20	20	20	20	20	20
Maximum British Thermal Unit Rating (BTU-Hr)	3174	3530	4600	4600	4600	4600	4600

NOTE: To review typical system power ratings use the HP Power Advisor which is available online located at url: www.hp.com/go/proliant-energy-efficient or www.hp.com/go/hppoweradvisor

System Unit	**Dimensions** (H x W x D) (with bezel)	SFF Drives: 3.38 x 17.54 x 27.25 in (8.59 x 44.55 x 69.22 cm)	
	Weight (approximate)	Maximum (all hard drives, power supplies, and processors installed)	60.00 lb (27.27 kg)
		Minimum (one hard drive, power supply, and processor installed)	47.18 lb (21.45 kg)
	Input Requirements (per power supply)	Rated Line Voltage	100 to 120 VAC 200 to 240 VAC
		Rated Input Current	For 1200 W Power Supply: 10 A (at 100 VAC), 4.9 A (at 200 VAC)
		Rated Input Frequency	50 to 60 Hz
		Rated Input Power	For 1200 W Power Supply: 930 W (at 100 VAC), 1348 W (at 200 VAC)
	BTU Rating	Maximum	For 1200 W Power Supply: 3530 BTU/hr (at 100 VAC), 4600 BTU/hr (at 200 VAC)
	Power Specifications	NOTE: To review typical system power ratings use the HP Power Advisor which is available online located at url: www.hp.com/go/proliant-energy-efficient or www.hp.com/go/hppoweradvisor	
	Power Supply Output (per power supply)	Rated Steady-State Power	For 1200 W Power Supply: 800 W (at 100 VAC), 900 W (at 120 VAC), 1200 W (at 200 to 240 VAC)
		Maximum Peak Power	For 1200 W Power Supply: 800 W (at 100 VAC), 900 W (at 120 VAC), 1200 W (at 200 to 240 VAC)
	System Inlet Temperature	Operating	10° to 40°C (50° to 95°F) at sea level with an altitude derating of 1.0°C per every 305 m (1.8°F per every 1000 ft) above sea level to a maximum of 3050 m (10,000 ft), no direct sustained sunlight. Maximum rate of change is 10°C/hr (18°F/hr). The upper limit may be limited by the type and number of options installed. System performance may be reduced if operating with a fan fault or above 30°C (86°F).
		Non-operating	-30° to 60°C (-22° to 140°F). Maximum rate of change is 20°C/hr (36°F/hr).
	Relative Humidity (non-condensing)	Operating	10 to 90% relative humidity (Rh), 28°C (82.4°F) maximum wet bulb temperature, non-

		condensing.
	Non-operating	5 to 95% relative humidity (Rh), 38.7°C (101.7°F) maximum wet bulb temperature, non-condensing.
Altitude	Operating	3050 m (10,000 ft). This value may be limited by the type and number of options installed. Maximum allowable altitude change rate is 457 m/min (1500 ft/min).
	Non-operating	9144 m (30,000 ft). Maximum allowable altitude change rate is 457 m/min (1500 ft/min).

Acoustic Noise

Listed are the declared A-Weighted sound power levels (LWAd) and declared average bystander position A-Weighted sound pressure levels (LpAm) when the product is operating in a 23°C ambient environment. Noise emissions were measured in accordance with ISO 7779 (ECMA 74) and declared in accordance with ISO 9296 (ECMA 109).

NOTE: The Listed sound levels apply to standard shipping configurations. Additional options may result in increased sound levels.

Idle	1P SKU	2P SKU
LWAd	4.1 B	4.7 B
LpAm	22 dBA	28 dBA
Operating	**1P SKU**	**2P SKU**
LWAd	4.1 B	4.7 B
LpAm	22 dBA	28 dBA

Emissions Classification (EMC)	FCC Rating	Class A
	Normative Standards	CISPR 22; EN55022; EN55024; FCC CFR 47, Pt 15; ICES-003; CNS13438; GB9254; K22;K24; EN 61000-3-2; EN 61000-3-3; EN 60950-1; IEC 60950-1

NOTE: Product conformance to cited product specifications is based on sample (type) testing, evaluation, or assessment. This product or family of products is eligible to bear the appropriate compliance logos and statements.

NOTE: The Listed sound levels apply to standard shipping configurations. Additional options may result in increased sound levels.

Technical Specifications

Smart Array P410i Controller	Dimensions (not including bracket)	Low Profile PCIe Form Factor 7.5 in x 9.5 in x 2.25 in (19.05 cm x 24.13 cm x 5.72 cm)
	Disk Drive and Enclosure Interface - transfer rate	3G SAS (Serial Attached SCSI) 1.5G SATA (Serial ATA)
	SAS Connectors	2 internal (Mini-SAS) x8 wide port connectors
	Cache Memory Speed	DDR2-533MHz with 40 or 72-bit wide bus provides up to 4.2 GB/s maximum bandwidth.
	Server Interface	x8 2.5G PCIe 2.0 provides 2GB/s maximum bandwidth
	SAS Speed	x8 3G SAS provides 2.4GB/s maximum bandwidth
	Cache Memory	40-bit 256MB ECC protected cache (72-bit 512MB BBWC module upgrades available); transportable with battery-backed upgrade
	Logical Drives Supported	Up to 32 logical drives
	Maximum Logical Drive Capacity	Greater than 2TB
	Host Memory Addressing	64-bit, supporting greater than 4GB server memory space
	RAID Support	RAID 6, 6+0 (Advanced Data Guarding) NOTE: The minimum of 256 MB cache, battery kit, and Smart Array Advanced Pack License Key upgrade is required to enable RAID 6, 6+0 RAID 5, 5+0 (Distributed Data Guarding) NOTE: The 256 MB & Battery Kit upgrade is required to enable RAID 5, 5+0 support of the Smart Array P410i RAID 1+0 (Striping & Mirroring) RAID 0 (Striping)
	Upgradeable Firmware	Upgradeable Firmware with Recovery ROM feature

HP NC382i Dual Port Multifunction Gigabit Server Adapters	Network Interface	10Base-T/100Base-TX/1000Base-TX	
	Compatibility	EEE 802.3 10Base-T	
		IEEE 802.3ab 1000Base-T	
		IEEE 802.3u 100Base-TX	
		IEEE 802.3ad 1000Base-TX	
		IEEE 802.1p 100Base-TX	
		IEEE 802.1q 100Base-TX	
	Data Transfer Method	PCI Express, four lanes (x4)	
	Network Transfer Rate	10Base-T (Half-Duplex)	10 Mb/s
		10Base-T (Full-Duplex)	20 Mb/s
		100Base-TX (Half-Duplex)	100 Mb/s
		100Base-TX (Full-Duplex)	200 Mb/s
		1000Base-TX (Half and Full-Duplex)	2000Mb/s
	Connector	Two RJ-45	
	Cable Support	10Base-T	Categories 3, 4 or 5 UTP; up to 328 ft (100 m)

100Base-TX	Category 5 or higher UTP; up to 328 ft (100 m)
1000BaseTX	Category 5 or higher UTP; up to 328 ft (100 m)

Environment-friendly Products and Approach	End-of-life Management and Recycling	Hewlett-Packard offers end-of-life HP product return, trade-in, and recycling programs in many geographic areas. For trade-in information, please go to: http://www.hp.com/go/green. To recycle your product, please go to: http://www.hp.com/go/green or contact your nearest HP sales office. Products returned to HP will be recycled, recovered or disposed of in a responsible manner. The EU WEEE directive (2002/95/EC) requires manufacturers to provide treatment information for each product type for use by treatment facilities. This information (product disassembly instructions) is posted on the Hewlett Packard web site at: http://www.hp.com/go/green. These instructions may be used by recyclers and other WEEE treatment facilities as well as HP OEM customers who integrate and re-sell HP equipment.

© Copyright 2011 Hewlett-Packard Development Company, L.P.

The information contained herein is subject to change without notice.

Microsoft and Windows NT are US registered trademarks of Microsoft Corporation.

Intel, the Intel logo, Xeon and Xeon Inside are trademarks of Intel Corporation in the U.S. and other countries.

The only warranties for HP products and services are set forth in the express warranty statements accompanying such products and services. Nothing herein should be construed as constituting an additional warranty. HP shall not be liable for technical or editorial errors or omissions contained herein.

For hard drives, 1GB = 1 billion bytes. Actual formatted capacity is less.