Overview

The HP ProLiant DL585 G5 is a highly manageable, rack optimized, four-socket server designed for maximum performance in an industry standard architecture. With up to four (4) Quad-Core AMD Opteron™ processors and a large memory footprint, the DL585 G5 delivers the performance and performance-per-watt needed for compute-hungry database, virtualization, and consolidation applications. Its industry leading remote management functions help reduce costs and improve the ability to respond quickly to business changes.

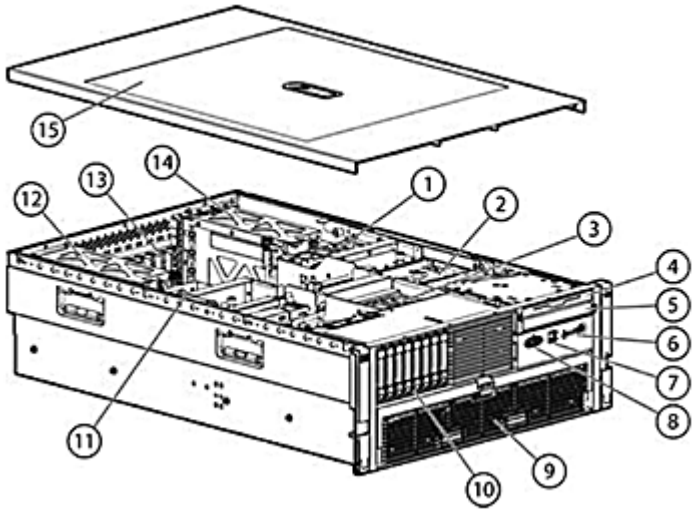

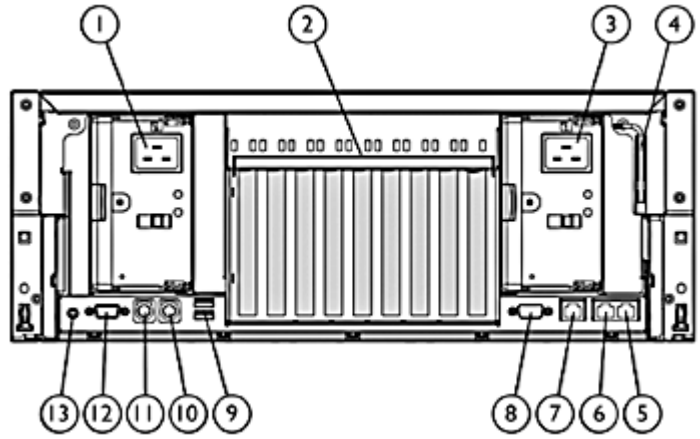

Front View:

1. Hot Plug Redundant Fans (standard)
2. System Insight Display
3. Hot Plug Redundant Fans (standard)
4. 1.44 MB Diskette Drive bay
5. DVD/CD-RW drive (standard)
6. Front Panel LED Display (internal and external health, Unit ID light) and Power Button
7. Two USB ports
8. One video port
9. Front accessible processor / memory cage
10. Eight bay Small Form Factor (SFF) Serial Attached SCSI (SAS) drive cage
11. 4U (7" Height) Rack Form Factor
12. Hot Plug Redundant Power Supply
13. Nine PCI I/O Slots (2 64-bit/100MHz PCI-X, 4 PCI-Express x4, 3 PCI-Express x8)
14. Hot Plug Redundant Power Supply
15. Removable Top Access Panel

Rear View:

1. Redundant hot-plug power supply (optional)
2. PCI Express and PCI-X non-hot-plug expansion slots
3. Hot-plug power supply (primary)
4. T-15 Torx screwdriver
5. NIC connector 2
6. NIC connector 1
7. Integrated Lights-Out 2 (iLO 2) connector
8. Serial connector
9. USB connectors (two)
10. Mouse connector
11. Keyboard connector
12. Video connector
13. Rear UID button and LED

Standard Features

NOTE: For the Standard Features shipped in the "Factory Integrated Models", please see the "Configuration Information - Factory Integrated Models" section.

Processor Two or four of the following depending on model	**Quad-Core Processors** AMD Opteron™ 8393 SE Quad-Core Processor (3.1 GHz, 105 W ACP) AMD Opteron™ 8389 Quad-Core Processor (2.9 GHz, 75 W ACP) AMD Opteron™ 8387 Quad-Core Processor (2.8 GHz, 75 W ACP) AMD Opteron™ 8381 HE Quad-Core Processor (2.5 GHz, 55 W ACP) AMD Opteron™ 8386 SE Quad-Core Processor (2.8 GHz, 105 W ACP) AMD Opteron™ 8384 Quad-Core Processor (2.7 GHz, 75 W ACP) AMD Opteron™ 8382 Quad-Core Processor (2.6 GHz, 75 W ACP) AMD Opteron™ 8380 Quad-Core Processor (2.5 GHz, 75 W ACP) AMD Opteron™ 8378 Quad-Core Processor (2.4 GHz, 75 W ACP) AMD Opteron™ 8376 HE Quad-Core Processor (2.3 GHz, 55 W ACP) AMD Opteron™ 8360 SE Quad-Core Processor (2.5 GHz, 105 W ACP) AMD Opteron™ 8358 SE Quad-Core Processor (2.4 GHz, 105 W ACP) AMD Opteron™ 8356 Quad-Core Processor (2.3 GHz, 75 W ACP) AMD Opteron™ 8354 Quad-Core Processor (2.2 GHz, 75 W ACP) AMD Opteron™ 8347 HE Quad-Core Processor (1.9 GHz, 55 W ACP) NOTE: Support for 2 or 4 processors NOTE: AMD Opteron™ 8300 Series Processors are 64-bit, Quad-Core, and support AMD Virtualization™, and up to 3.1GHz clock speed. NOTE: Processor wattage references reflect Average CPU Power (ACP). For more information on ACP, please see: http://www.amd.com/powernow.
Cache Memory One of the following depending on model	512KB integrated level 2 cache per core 2MB shared level 3 cache per processor NOTE: Depends on model. 6MB shared level 3 cache per processor NOTE: Depends on model.
Chipset	nVidia NForce Professional 2200 and 2050 chipsets, and AMD-8132 chipset
Upgradeability	Upgradeable to quad (4) processors
Memory Protection	Advanced ECC

Standard Features

Memory	Type	PC2-5300 Registered DIMMs at 667 MHz
	One of the following depending on model	PC2-6400 Registered DIMMs at 800 MHz
	Standard	4GB (4 x 1GB)
	One of the following depending on Model	8GB (8 x 1GB)
		16GB (8 x 2GB)
	Maximum	256GB (32 x 8GB)

Network Controller Two embedded NC371i Multifunction Gigabit Network Adapters with TCP/IP Offload Engine, including support for Accelerated iSCSI through an optional Licensing Kit

Expansion Slots

NOTE: 9 total slots: (3) x8 PCI-Express; (4) x4 PCI-Express; (2) PCI-X (100MHz). One slot populated with the Smart Array P400 Controller.

Expansion Slots #	Technology	Bus Width***	Connector Width	Bus Number*	Device No.**	Form Factor	Notes
1	PCI-X (100MHz, 3.3 Volt)	64-bit	N/A	66	1	Half length, full height	
2	PCI-X (100MHz, 3.3 Volt)	64-bit	N/A	66	2	Full length, full height slot	
3	PCI Express	x4	x8	73	0	Full length, full height slot	100MHz
4	PCI Express	x4	x8	76	0	Full length, full height slot	100MHz
5	PCI Express	x8	x16	70	0	Full length, full height slot	100MHz
6	PCI Express	x4	x8	79	0	Full length, full height slot	100MHz
7	PCI Express	x8	x16	2	0	Full length, full height slot	100MHz
8	PCI Express	x8	x16	5	0	Full length, full height slot	100MHz
9	PCI Express	x4	x8	8	0	Half length, full height	Reserved slot for Smart Array P400 Controller

* Default bus assignment (in decimal). Inserting cards with PCI bridges may alter the actual bus assignment number
** Slots are enumerated differently based on OS. MS OS's enumerate from lowest to highest Device ID by bus (starting with the lowest bus).
*** Indicates the number of physical electrical lanes running to a PCI-e connector.

Storage Controllers
One of the following depending on Model

2.2GHz Models:	HP Smart Array P400/256 MB Controller (in PCI-Express slot 9)
All other Models:	HP Smart Array P400/512 MB Controller with BBWC (in PCI-Express slot 9)

The Battery-Backed Write Cache (BBWC) Enabler for the Smart Array P400 Controller protects up to 512MB write cache memory from hard boot, power, controller, or system board failures.

- Standard on most Models
- Battery charge/life: Up to 72 hours/3 years
- Transportable data protection
- Increases overall controller performance

NOTE: Safely transport your write cache data to another HP ProLiant DL585 G5 in the data center by removing the BBWC and Smart Array P400 Controller Memory Module simultaneously.

Internal Storage Devices

Diskette Drive	1.44MB Diskette Drive bay available
Optical Drive	Slimline DVD/CD-RW Drive Standard on some models - ejectable for security and serviceability
Hard Drives	None ship standard
Hard Disk Drive Backplane	Internal SAS backplane supports up to eight SFF hard disk drives

Maximum Internal Storage

Hot Plug SFF SAS	4.0TB	8 x 500GB
Hot Plug SFF SATA	4.0TB	8 x 500GB

Interfaces

Serial	1
Video	1 front, 1 rear
Network RJ-45	2
iLO 2 Remote Management	1
Keyboard	1
Pointing Device (Mouse)	1
USB 2.0 Ports	2 front, 2 rear, 1 internal NOTE: Please see the following URL for additional information regarding USB support: http://h18004.www1.hp.com/products/servers/platforms/usb-support.html

Standard Features

Industry Standard Compliance	ACPI 1.0a. Compliant PCI 2.2 Compliant PXE Support WOL Support (with embedded NC371i Multifunction Gigabit Network Adapters) Physical Address Extension (PAE) Support Microsoft® Logo certifications USB 2.0 Support
Server Power Cords	The HP ProLiant DL585 G5 servers ship standard worldwide with a 6-foot IEC 320-C14 to IEC320-C19 jumper cord. Japanese models also include a 3.6 meter lowline (100V) power cord. If you require a local power cord, please check the Power Specifications below for the appropriate country-specific power cord, or consult the Power Cord Matrix: http://www.hp.com/go/powercordmatrix.
Power Supply	910W (low line), 1300W (high line) with 12V main output. Size is 2.8"(H) X 4.9"(W) X 7.5"(L). NOTE: One Hot Plug Power Supply ships with Standard Models (optional Redundant Hot Plug Power Supply Option Kit available). High Performance models ship with two Hot Plug Power Supplies.
System Fans	Standard: 6 Hot plug, redundant fans (individually removable) Maximum: 6 Hot plug, redundant fans (individually removable)
Required Cabling	For required cabling information, refer to the HP Web site at: www.hp.com/servers/dl585
Operating Systems and Virtualization Software Support for ProLiant Servers	Microsoft Windows Server Microsoft Windows Server Hyper V Red Hat Enterprise Linux (RHEL) SUSE Linux Enterprise Server (SLES) Oracle Enterprise Linux (OEL) Solaris Citrix Essentials for XenServer NOTE: For more information on HP's Certified and Supported ProLiant Servers for OS and Virtualization Software and latest listing of software drivers available for your server, please visit our Support Matrix at: www.hp.com/go/ossupport and our driver download site www.hp.com/support/DL585G5
Graphics	Integrated ATI-RN50 with 32MB DDR memory
Form Factor	Rack (4U = 7 inches), ships with sliding rails and cable management system Space saving form factor (4U) provides space efficiencies while providing maximum deployment flexibility

Standard Features

HP Insight management software	HP Insight Foundation	Managing the growing number of servers can be complex and expensive for your organization. IT managers need to address changing business needs with tools that meet the challenges of managing today's complex Datacenters. HP provides management solutions that are designed to simplify a server's installation, configuration and maintenance throughout the entire server lifecycle. This provides the customer with higher levels of operational efficiency and highly reliable systems: http://www.hp.com/go/foundation. The foundation pack includes: • HP SmartStart • HP Management DVD • HP ProLiant Smart Update Firmware DVD SmartStart version supported (minimum): SmartStart 7.60. http://www.hp.com/servers/smartstart NOTE: In an effort to support reducing our environmental impact, the HP Insight Foundation Suite for ProLiant media will be available as a selectable option for this server at time of order of a CTO SKU. This will allow customers to order the number of media kits that best meet their needs and eliminate receiving unnecessary duplicate media.
	HP Integrated Lights-Out (iLO) integrated on system board	HP Integrated Lights-Out (iLO) simplifies server setup, health monitoring, power and thermal control, and lights-out remote administration of ProLiant ML, DL, and BL servers. HP iLO functions without additional software and can be accessed from any location via a web browser. HP iLO works hand-in-hand with HP Systems Insight Manager, Insight Control suites, and Insight Dynamics for ProLiant, helping customers unleash the value of the ProLiant platform and deliver the highest possible quality of IT service. For more information, visit: www.hp.com/go/iLO

Intelligent Manageability	HP Systems Insight Manager software SmartStart Redundant ROM Remote Flash ROM Management Agents Integrated Management Log (IML) Automatic Server Recovery-2 (ASR-2) ROM-Based Setup Utility (RBSU) Dynamic Sector Repairing (with Smart Array Controllers) Drive Parameter Tracking (with Smart Array Controllers) Pre-Failure Warranty (covers processors, SAS hard drives and memory) Redundant/adaptive load balancing NIC Support

Standard Features

Security	Power-on password Keyboard password Diskette drive control enable/disable Diskette boot control enable/disable External USB port enable/disable Network Server Mode Serial interface control Administrator's password Removable optical drive
Warranty	This product is covered by a global limited warranty and supported by HP Services and a worldwide network of HP Authorized Channel Partners resellers. Hardware diagnostic support and repair is available for three years from date of purchase. Support for software and initial setup is available for 90 days from date of purchase. Enhancements to warranty services are available through HP Care Pack services or customized service agreements. Hard drives have either a one year or three year warranty; refer to the specific hard drive QuickSpecs for details. NOTE: Server Warranty includes 3-Year Parts, 3-Year Labor, 3-Year Onsite support with next business day response. Warranty repairs may be accomplished through the use of Customer Self Repair (CSR) parts. These parts fall into two categories: 1) Mandatory CSR parts are designed for easy replacement. A travel and labor charge will result when customers decline to replace a Mandatory CSR part; 2) Optional CSR parts are also designed for easy replacement but may involve added complexity. Customers may choose to have HP replace Optional CSR parts at no charge. Additional information regarding worldwide limited warranty and technical support is available at: http://h18004.www1.hp.com/products/servers/platforms/warranty/index.html.

Optional Features

HP Insight management software	HP Insight Control	HP Insight Control, a product option, delivers essential infrastructure management that can help save time and money by making it easy to deploy, migrate, monitor, remote control, and optimize your IT infrastructure through a single, simple management console. Two versions of Insight Control are available, to serve environments requiring either a Linux-based or a Windows-based central management server: HP Insight Control for Linux, and HP Insight Control. See www.hp.com/go/insightcontrol HP Insight Control includes one year of 24 x 7 HP Software Technical Support and Update Service ensuring rapid access to HP support staff and proactive delivery of software updates. For more information about this service, please visit: http://www.hp.com/services/insight.
	HP Insight Dynamics for ProLiant	HP Insight Dynamics for ProLiant, a product option, is an integrated command center that enables IT Staff personnel to continuously analyze and optimize a converged infrastructure, while automating and reducing the cost of common data center tasks by as much as 40 percent. As a powerfully integrated by design toolkit to accelerate complex technology projects and simplify daily operations that ultimately enable IT Staff personnel to dynamically keep pace with the organizations changing business requirements. It enables them to plan capacity and power continuously, balance across physical and virtual resources, and ensure cost-effective high availability. It also enables IT organizations to provision infrastructure consistently and automatically from pools of shared resources using a self-service portal. Resources provisioned can range from a single virtual machine to complex multi-tier environments and their associated physical and virtual resource requirements. In addition to the previous functional benefits, it also provides a cost-effective disaster recovery for physical and virtual environments that works with HP StorageWorks Continuous Access software for both the Enterprise Virtual Array and the XP storage array allowing application environments to be reactivated in minutes with the touch of a button to a remote location. NOTE: For more information, visit: http://www.hp.com/go/insightdynamics

Optional Features

Solutions

Designed for enterprise customers running compute- or I/O intensive database and transaction applications, as well as data centers using virtualization and consolidation to reduce server sprawl, the rack optimized 4-processor HP ProLiant DL585 G5 server delivers maximum performance and high availability for highly complex, business critical applications. Specifically, the HP ProLiant DL585 G5 would be excellent for running the following types of applications:

Typical Usage:

- x86 virtualization and consolidation projects
- Electronic Design Automation (EDA)/Semiconductor
- Financial
- Large database applications
- ERP / CRM
- Petrochemical
- Life Science and Material Science
- Video Rendering

Factory Express Portfolio for Servers and Storage

HP Factory Express offers configuration, customization, integration and deployment services for HP servers and storage products. Customers can choose how their factory solutions are built, tested, integrated, shipped and deployed.

Factory Express offers service packages for simple configuration, racking, installation, complex configuration and design services as well as individual factory services, such as image loading, asset tagging, and custom packaging. HP products supported through Factory Express include a wide array of servers and storage: HP Integrity, HP ProLiant, HP ProLiant Server Blades, HP BladeSystem, HP 9000 servers as well as the MSAxxxx, VA7xxx, EVA, XP, rackable tape libraries and configurable network switches.

For more information on Factory Express services for your specific server model, please contact your sales representative or go to: http://www.hp.com/go/factory-express.

HP Enterprise Configurator

The HP eConfigure-Enterprise Configurator now provides factory default racking for our HP hardware portfolio. This approach is aligned with our strategic direction to meet the needs and expectations of our valued customers. If you require "custom" rack configuration, please contact HP's Customer Business Center or an Authorized Partner for assistance. http://www.hp.com/products/configurator.

Service and Support

For increased uptime, productivity and ROI - HP Care Pack packaged services for Servers

These days, you need to get the most out of your server investment - you can't afford not to. When you buy HP server products and solutions, it's also a good time to think about what levels of service and support you may need. To help take the worry out of deploying, designing, maintaining, and managing your environment, we've designed a portfolio of service options that are as: flexible, reliable and scalable as your server. Unlike server-only vendors, we take a holistic approach to your entire environment, bridging storage, servers, blades, software and network infrastructures with our HP Care Pack packaged services for Servers.

Protect your business beyond the warranty

When it comes to robustness and reliability, standard warranties on today's computing equipment have matured just as the technologies have matured. Good news on some fronts - but also a source of potential problems and subsequent consequences that come from depending on standard warranties alone. Standard warranty protects against product defects and some causes of downtime - but not the business. By using a standard approach to warranty uplifts, such as HP Care Pack Services, you can reduce downtime risks and be more certain of operational consistency for both mission-critical and standard business computing. Simply put, HP Care Pack Services normalize the warranty of combined products - helping you proactively guard against unplanned downtime.

Extending warranties with HP Care Pack Services

For cost-effective upgrading or extending your standard warranty, HP Care Pack Services offer a suite of standard reactive hardware and software support services that are sold separately, or combined as with our Support Plus and Support Plus 24 services. The portfolio also provides a combination of proactive and reactive services, such as Proactive 24 Service and Critical Service. In addition, with HP Proactive Select we offer an innovative approach to service delivery that gives you the flexibility to acquire the specific proactive services you need today, then add services as your needs evolve. HP Proactive Select offers a broad set of technical or per-event type service options - including server, storage, and network, SAN device, and software, environment, installation and education services. Services that you can mix and match depending on your specific requirements, from preliminary planning and equipment delivery to installation, configuration, integration, and testing, through every level of ongoing support. Our HP Care Pack packaged services for Servers assures help when you need it most. And for many products, post-warranty HP Care Pack Services are available when your original warranty has expired.

HP Server Services: Offering reliability, flexibility and value - just like your storage

HP Server Services offers a full spectrum of customer care, from technology support to complex migrations to complete completely managed services. HP Factory Express provides customization, integration and deployment services for turnkey solutions. HP Education offers flexible, comprehensive training on server networking and server software to help your IT staff get the most out of your investments. And HP Financial solutions extend innovative financing and asset management programs to cost-effective buy, manage and eventually retire your older equipment.

HP Server Services, the trusted business technology experts who manage your technology in action, because when technology works, business works. http://www.hp.com/services/servers, http://www.hp.com/services/storage

NOTE: Care Pack Services availability may vary by product and country.

HP Care Pack Services are sold by HP and HP Authorized Service Partners:

- Services for customers purchasing from HP or an enterprise reseller are quoted using HP order configuration tools.
- Customers purchasing from a commercial reseller can find HP Care Pack Services at: http://www.hp.com/go/lookuptool

Recommended HP Care Pack Services for optimal satisfaction with your HP product.

Recommended Services

Hardware Support - 3-Year HP 24x7 6-hour call to repair Care Pack

3-Year HP 24x7 6-hour call to repair Care Pack - This cost-effective service helps you minimize system downtime due to hardware failure. It features a commitment to resolve hardware problems within 6 hours from the time your service call is received. (Please note repair-time restrictions below.)

When you experience system problems, your call is immediately connected to an HP-certified resolution engineer for troubleshooting. If your problem cannot be resolved remotely, an experienced support professional is dispatched to your site to begin hardware repair activities.

Service feature highlights

- Remote monitoring and problem diagnosis and support
- Onsite hardware support
- 6-hour call-to-repair time commitment
- Materials included
- Enhanced parts inventory management
- 24x7 coverage window
- Work to completion
- Escalation management

http://h20195.www2.hp.com/V2/GetPDF.aspx/5981-6636ENN

Hardware Support - 3 - Years 24x7 24 hour Call-to-Repair

3-Year HP 24x7 24-hour call to repair Care Pack - This cost-effective service helps you minimize system downtime due to hardware failure. It features a commitment to resolve hardware problems within 6 hours from the time your service call is received. (Please note repair-time restrictions below.)

When you experience system problems, your call is immediately connected to an HP-certified resolution engineer for troubleshooting. If your problem cannot be resolved remotely, an experienced support professional is dispatched to your site to begin hardware repair activities.

ProLiant Servers Installation and Startup Service

HP Installation and Startup of HP ProLiant Servers provides for the installation of your new HP ProLiant server and operating system. This will assist you in bringing your new HP ProLiant server and operating system into operation in a timely and professional manner.

Service benefits
This service provides a trained HP service specialist to perform an installation that meets HP quality

standards, for:

- Delivery of the service at a mutually scheduled time convenient to your organization
- Availability of an HP service specialist to answer basic questions during the onsite delivery of this service
- Custom installation as detailed in "Delivery specifications" or in a Statement of Work (SOW)
- Verification prior to installation that all service prerequisites are met

Service benefits
This service provides a trained HP service specialist to perform an installation that meets HP quality standards, for:

- Delivery of the service at a mutually scheduled time convenient to your organization
- Availability of an HP service specialist to answer basic questions during the onsite delivery of this service
- Custom installation as detailed in "Delivery specifications" or in a Statement of Work (SOW)
- Verification prior to installation that all service prerequisites are met

http://h20195.www2.hp.com/V2/GetPDF.aspx/5982?7572ENN

Optional HP Care Pack Services that will enhance your HP product experience.

Optional Services

3-Year HP Support Plus 24 Service Care Pack

As an alternative to our recommended support level, for customers who need access to responsive 24x7 hardware and software support plus software updates on HP and selected third party products:

HP Support Plus 24 helps you increase performance and availability with comprehensive, consistent hardware and software services. Working with your IT team, HP Services engineers deliver onsite hardware support and over-the-phone software support around-the-clock 365 days per year. Service coverage encompasses HP products and selected multi-vendor hardware and software.

In addition, this convenient HP Care Pack packaged service makes software updates available to you at substantial savings.

Choose Support Plus 24 when you need to:

- Improve uptime with responsive hardware and software services available anytime
- Cost-effectively obtain expert 24x7 multi-vendor hardware and software support
- Enjoy consistent service coverage across geographically dispersed sites
- Update HP and selected third-party software at a predictable cost
- Take advantage of subscription savings on software updates

http://h20195.www2.hp.com/V2/GetPDF.aspx/5981-6638EEE

3 Year HP Proactive 24

As an alternative to our recommended support level, for customers who want enhanced operational effectiveness and proactive problem identification:

HP Proactive 24 Service (P24) integrates hardware and software support to help you improve the stability

and operational effectiveness of your IT environment. An HP Account Manager acts as your primary point of contact to ensure that HP meets your support needs effectively.

P24 provides the maximum value when multiple technologies in the environment (e.g. servers, storage, SAN and the network), are all covered. It provides an environment-wide view and consistent support of all of these components which affect stability of your key applications.

Choose P24 when you want to:

- enhance operational effectiveness with proactive problem identification and recommendations from HP
- partner with technical experts who help coordinate support, provide hands-on assistance, and share knowledge with your staff
- rapidly access support and expertise spanning your environment
- obtain personalized services tailored to your business environment and critical success factors
- anticipate necessary change - and execute it correctly the first time
- efficiently manage infrastructure resources to meet your performance objectives

http://h20195.www2.hp.com/V2/GetPDF.aspx/4AA0-1614ENUC

Hardware Support - 3-Year, 24x7 Same-Business-Day, On-site. 4-Hour response coverage

As an alternative to our recommended support level, for customers who need same day response service level 24x7.

3-Year, 24x7 Same-Business-Day, On-site. 4-Hour response coverage provides high-quality remote assistance and onsite support for
your covered hardware, helping you to improve product uptime. You have the flexibility to choose between different service-level options featuring different response times and coverage windows, as well as between several coverage periods to address your specific service needs.

Service benefits

- Help improve or maintain system uptime
- Convenient onsite support
- Reliable response times

Service feature highlights

- Remote problem diagnosis and support
- Onsite hardware support
- Materials included
- Service-level options with different coverage windows and response times
- Work to completion
- Escalation management
- Access to electronic support information and services
- HP electronic remote monitoring and support solution (for eligible products only)
- Optional Defective Media Retention Service

http://h20195.www2.hp.com/V2/GetPDF.aspx/5982-6547EEE

eSupport

HP eSupport is a portfolio of technology-based services that assist you with managing your business environment - from the desktop to the data center.

Support Portal
The HP support portal provides one-stop access to the information, tools and services you need to manage the daily operations of your IT environment.

Features include:

- Access to self-solve tools (including search technical knowledge base)
- Efficient logging and tracking of support cases
- Collaboration with other business and IT professionals
- Download of patches and drivers
- Access to diagnostic tools
- Proactive notification of relevant information

Access to certain features of the support portal requires an HP service agreement. To access the support portal, visit: http://www.hp.com/support

HP Insight Remote Support software delivers secure remote support for your HP Servers and Storage, 24 X 7, so you can spend less time solving problems and more time focused on your business. You can have your systems remotely monitored for hardware failure using secure technology that's been proven at thousands of companies around the world. In many cases, you can avoid problems before they occur.

Pre-configured Models

NOTE: For the Standard Features shipped in the "Factory Integrated Models", please see the "Configuration Information - Factory Integrated Models" section.
NOTE: Pre-configured models ship with the configurations below. Options can be selected from the Core or Additional options section of this QuickSpecs.
NOTE: HP does not allow factory integration of options into pre-configured models. Any additional options purchased will be shipped separately.
NOTE: If you desire a custom configuration please see "Configuration Information - Factory Integrated Models" section of this QuickSpecs.
NOTE: Not all models are available in all regions. Check with your local country HP offices for availability.

Performance Models

DL585R05 O3.1GHz, 8393 SE, 4P, 16GB 534498-xx1 DL585R05 O2.9GHz, 8389, 4P, 16GB 534499-xx1 DL585R05 O2.8GHz, 8387 SE, 4P, 16GB 534500-xx1	Processors Four of the following depending on model	AMD Opteron™ Processor 8393 SE, Quad-Core (3.1 GHz, 105 W ACP) AMD Opteron™ Processor 8389, Quad-Core (2.9 GHz, 75 W ACP) AMD Opteron™ Processor 8387 SE, Quad-Core (2.8 GHz, 75 W ACP)
	Cache Memory One of the following depending on model	6MB shared L3 cache per processor (Opteron 8380 models and up) 2MB shared L3 cache per processor (all others) 512KB dedicated level 2 cache per core
	Memory One of the following depending on model	16 GB (8 x 2 GB) of PC2-6400 DDR SDRAM standard (Opteron 8380 models and up) 16 GB (8 x 2 GB) of PC2-5300 DDR SDRAM standard to 256 GB (Opteron 8360 SE- and 8358 SE-equipped models) 8 GB (8 x 1 GB) of PC2-5300 DDR SDRAM (standard) to 256 GB (Opteron 8356 SE-equipped models)
	Network Controller	Two embedded NC371i Multifunction Gigabit Network Adapters
	Storage Controller	HP Smart Array P400/512 MB Controller with BBWC
	Manageability	HP Integrated Lights-Out 2 management processor: Integrated on system board
	Hard Drives	None ship standard
	Internal Storage	4.0TB SATA; 4.0TB SAS maximum (with optional hard drives)
	Optical Drive	Slimline DVD/CD-RW Drive (8X/24X) (ejectable)
	Power Supply	Two 910W/1300W Power Supplies standard
	Form Factor	Rack 4U
	Warranty	Server Warranty includes 3-Year Parts, 3-Year Labor, 3-Year Onsite support with next business day response.

Country Code Key	xx=00	US
	xx=20	Brazil
	xx=29	Japan
	xx=37	A/P
	xx=42	Europe
	xx=AA	PRC

NOTE: This section lists some of the steps required to configure a Factory Integrated Model. To ensure only valid configurations are ordered, HP recommends the use of an HP approved configurator. Contact your local sales representative for information on CTO product offerings and requirements.
NOTE: HP does not allow factory integration of options into standard models listed above. Configure-to-order servers must start with a CTO Chassis.
NOTE: FIO indicates that this option only available as a Factory Installable Option.

Step 1: Base Configuration

HP Models	HP ProLiant DL585 G5 Rack CTO Chassis	455349-B21
	Factory Integrated Models ship with:	
	Two embedded NC371i Multifunction Gigabit Network Adapters Integrated Lights-Out 2 (iLO 2) Standard management Six (6) Redundant Hot Plug Fans One Hot Plug Power Supply Rack 4U Form Factor	

Step 2: Choose Required Options (only one of the following from each list unless otherwise noted)

HP Processors	NOTE: If four processors are desired, select one xxxxxx-L21 and one xxxxxx-B21.	
	AMD Opteron™ 8393SE 3.10GHz Quad Core 105 Watts DL585 G5 Factory Integrated Processor Option Kit	534505-L21
	AMD Opteron™ 8389 2.90GHz Quad Core 75 Watts DL585 G5 Factory Integrated Processor Option Kit	534506-L21
	AMD Opteron™ 8387 2.80GHz Quad Core 75 Watts DL585 G5 Factory Integrated Processor Option Kit	534507-L21
	AMD Opteron™ 8381HE 2.50GHz Quad Core 55 Watts DL585 G5 Factory Integrated Processor Option Kit	534508-L21
	AMD Opteron™ 8356 2.3GHz Quad Core DL585 G2 Factory Integrated Processor Option Kit	448193-L21

Configuration Information - Factory Integrated Models

HP Memory	HP 2GB (2x1GB) Single Rank PC2-5300 (DDR2-667) Registered Memory Kit	408851-B21
	HP 2GB (2x1GB) Single Rank PC2-6400 (DDR2-800) Registered Memory Kit	497763-B21
	HP 4GB (2x2GB) Dual Rank PC2-5300 (DDR2-667) Registered Memory Kit	408853-B21
	HP 4GB (2x2GB) Single Rank PC2-5300 (DDR2-667) Registered Low Power Memory Kit	483401-B21
	HP 4GB (2x2GB) Single Rank PC2-6400 (DDR2-800) Registered Memory Kit	497765-B21
	HP 8GB (2x4GB) Dual Rank PC2-5300 (DDR2-667) Registered Memory Kit	408854-B21
	HP 8GB (2x4GB) Dual Rank PC2-5300 (DDR2-667) Registered Low Power Memory Kit	483403-B21
	HP 8GB (2x4GB) Dual Rank PC2-6400 (DDR2-800) Registered Memory Kit	497767-B21
	HP 8GB (2x4GB) Dual Rank x4 PC2-6400 (DDR2-800) Registered Low Power Memory Kit	504351-B21
	HP 16GB (2x8GB) Dual Rank PC2-5300 (DDR2-667) Registered Memory Kit	408855-B21
	HP 64GB (8x8GB) Dual Rank PC2-5300 (DDR2-667) Registered Memory Kit	495605-B21
	NOTE: Memory must be installed in like-pairs, i.e. two of the same size. NOTE: 800MHz memory kits are supported on models configured with Opteron 8386 SE, 8384, 8382, 8380, 8378, 8376 HE processors. Memory bus speeds will operate as follows: 2-4 DIMMs at 800MHz; 6 at 667MHz; 8 at 533MHz. PC2-5300 memory modules operate at 667MHz with up to 4 DIMMs and 533MHz when using additional DIMMs.	
HP Storage Controllers	SAS Controllers	
	HP Smart Array P800/512 BBWC 2-ports Int/2-ports Ext PCIe x8 SAS Controller	381513-B21
	HP Smart Array P600/256 1-ports Int/2-ports Ext PCI-X SAS Controller	337972-B21
	HP Smart Array P400/256 2-ports Int PCIe x8 SAS Controller	405132-B21
	HP Smart Array P400 512MB Battery Kit	411064-B21
	HP Smart Array P212/ZM 1-ports Int/1-ports Ext PCIe x8 SAS Controller	462828-B21
	HP Smart Array P212/256 1-ports Int/1-ports Ext PCIe x8 SAS Controller	462834-B21
	HP Smart Array P410/256 2-ports Int PCIe x8 SAS Controller	462862-B21
	HP Smart Array P410/512 BBWC 2-ports Int PCIe x8 SAS Controller	462864-B21
	HP Smart Array P411/256 2-ports Ext PCIe x8 SAS Controller	462830-B21
	HP Smart Array P411/512 BBWC 2-ports Ext PCIe x8 SAS Controller	462832-B21
	HP Smart Array P600 w/512 FIO Ctrlr	432103-B21
	SAS HBA	
	HP 64/133 2-ports Int PCI-X SAS Host Bus Adapter	347786-B21
	NOTE: Transfer rate 1.5 Gb/s SATA, 3Gb/s SAS.	
HP Optical Drives	NOTE: Optical drives are ejectable.	
	HP Slimline CD-RW/DVD-ROM 24X Carbon Combo Drive	331903-B21
	HP 8X/24X SlimLine DVD-ROM Drive	264007-B21
	HP 8X Slim DVD+RW Drive	383975-B21

Step 3: Choose Additional Options for Factory Integration

NOTE: For additional options, please refer to the "Core Options" and "Additional Options" section below.

Core Options

NOTE: Some options may not be integrated at the factory. To ensure only valid configurations are ordered, HP recommends the use of an HP approved configurator. Contact your local sales representative for additional information.

HP Unique Options	HP DL585 Video Power Cable	576444-B21
HP Processors	**Six-Core Processors**	
	HP DL585 G5/G6 AMD Opteron™ 8435 (2.60GHz/6-core/6MB/75W) 2-Processor Kit	572373-B21
	HP DL585 G5/G6 AMD Opteron™ 8431 (2.40GHz/6-core/6MB/75W) 2-Processor Kit	539848-B21
	Quad-Core Processors	
	HP DL585 G5/G6 AMD Opteron™ 8425HE (2.10GHz/6-core/6MB/55W) 2-Processor Kit	539849-B21
	HP DL585 G5/G6 AMD Opteron™ 8439SE (2.80GHz/6-core/6MB/105W) 2-Processor Kit	539847-B21
	HP DL585 G5 AMD Opteron™ 8386SE (2.80GHz/4-core/6MB/105W) Processor Kit	513602-B21
	HP DL585 G5 AMD Opteron™ 8393SE (3.10GHz/4-core/6MB/105W) Processor Kit	534505-B21
	HP DL585 G5 AMD Opteron™ 8389 (2.90GHz/4-core/6MB/75W) Processor Kit	534506-B21
	HP DL585 G5 AMD Opteron™ 8387 (2.80GHz/4-core/6MB/75W) Processor Kit	534507-B21
	HP DL585 G5 AMD Opteron™ 8381HE (2.50GHz/4-core/6MB/55W) Processor Kit	534508-B21
	HP DL585 G5 AMD Opteron™ 8384 (2.70GHz/4-core/6MB/75W) Processor Kit	502476-B21
	HP DL585 G5 AMD Opteron™ 8382SE (2.60GHz/4-core/6MB/105W) Processor Kit	502475-B21
	HP DL585 G5 AMD Opteron™ 8380 (2.50GHz/4-core/6MB/75W) Processor Kit	502474-B21
	HP DL585 G5 AMD Opteron™ 8378 (2.40GHz/4-core/6MB/75W) Processor Kit	502473-B21
	HP DL585 G5 AMD Opteron™ 8376HE (2.30GHz/4-core/6MB/55W) Processor Kit	513603-B21
	HP DL585 G5 AMD Opteron™ 8360SE (2.50GHz/4-core/2MB/105W) 2-Processor Kit	448195-B21
	HP DL585 G5 AMD Opteron™ 8358SE (2.40GHz/4-core/2MB/105W) 2-Processor Kit	448194-B21
	HP DL585 G5 AMD Opteron™ 8356 (2.30GHz/4-core/2MB/75W) 2-processor Kit	448193-B21
	HP DL585 G5 AMD Opteron™ 8354 (2.20GHz/4-core/2MB/75W) 2-Processor Kit	448192-B21
	HP DL585 G5 AMD Opteron™ 8347HE (1.90GHz/4-core/2MB/55W) 2-Processor Kit	502652-B21

Core Options

HP Memory	HP 2GB (2x1GB) Single Rank PC2-5300 (DDR2-667) Registered Memory Kit	408851-B21
	HP 2GB (2x1GB) Single Rank PC2-6400 (DDR2-800) Registered Memory Kit	497763-B21
	HP 4GB (2x2GB) Dual Rank PC2-5300 (DDR2-667) Registered Memory Kit	408853-B21
	HP 4GB (2x2GB) Single Rank PC2-5300 (DDR2-667) Registered Low Power Memory Kit	483401-B21
	HP 4GB (2x2GB) Single Rank PC2-6400 (DDR2-800) Registered Memory Kit	497765-B21
	HP 8GB (2x4GB) Dual Rank PC2-5300 (DDR2-667) Registered Memory Kit	408854-B21
	HP 8GB (2x4GB) Dual Rank PC2-5300 (DDR2-667) Registered Low Power Memory Kit	483403-B21
	HP 8GB (2x4GB) Dual Rank PC2-6400 (DDR2-800) Registered Memory Kit	497767-B21
	HP 8GB (2x4GB) Dual Rank x4 PC2-6400 (DDR2-800) Registered Low Power Memory Kit	504351-B21
	HP 16GB (2x8GB) Dual Rank PC2-5300 (DDR2-667) Registered Memory Kit	408855-B21
	HP 64GB (8x8GB) Dual Rank PC2-5300 (DDR2-667) Registered Memory Kit	495605-B21
	NOTE: Memory must be installed in like-pairs, i.e. two of the same size. NOTE: 800MHz memory kits are supported on models configured with Opteron 8386 SE, 8384, 8382, 8380, 8378, 8376 HE processors. Memory bus speeds will operate as follows: 2-4 DIMMs at 800MHz; 6 at 667MHz; 8 at 533MHz. PC2-5300 memory modules operate at 667MHz with up to 4 DIMMs and 533MHz when using additional DIMMs.	
HP Optical Drives	HP Slimline CD-RW/DVD-ROM 24X Carbon Combo Drive	331903-B21
	HP 8X/24X SlimLine DVD-ROM Drive	264007-B21
	HP 8X Slim DVD+RW Drive	383975-B21
HP Hard Drives	NOTE: the components of a storage subsystem (e.g. the drive, the HBA/controller, firmware, and the server backplane) should operate at the same data transfer rate or the system bandwidth will be negotiated down to an acceptable level for all components. NOTE: Hard drives have either a one year or three year warranty; refer to the specific hard drive QuickSpecs for details.	
	SAS Hot Plug SFF (2.5-inch) Enterprise (ENT) Drives	
	HP 300GB 6G SAS 10K rpm SFF (2.5-inch) Dual Port Enterprise 3yr Warranty Hard Drive	507127-B21
	HP 146GB 6G SAS 15K rpm SFF (2.5-inch) Dual Port Enterprise 3yr Warranty Hard Drive	512547-B21
	HP 146GB 6G SAS 10K rpm SFF (2.5-inch) Dual Port Enterprise 3yr Warranty Hard Drive	507125-B21
	HP 72GB 6G SAS 15K rpm SFF (2.5-inch) Dual Port Enterprise 3yr Warranty Hard Drive	512545-B21
	SAS Hot Plug SFF (2.5-inch) Midline (MDL) Drives	
	HP 500GB 6G SAS 7.2K rpm SFF (2.5-inch) Dual Port Midline 1yr Warranty Hard Drive	507610-B21

	NOTE: Please see the QuickSpecs for Technical Specifications and additional information: http://h18000.www1.hp.com/products/quickspecs/12244_div/12244_div.html (Worldwide)	
	SATA Hot Plug SFF (2.5-inch) Midline (MDL) Drives	
	HP 500GB 3G SATA 7.2K rpm SFF (2.5-inch) Midline 1yr Warranty Hard Drive	507750-B21
	HP 160GB 3G SATA 7.2K rpm SFF (2.5-inch) Midline 1yr Warranty Hard Drive	530888-B21
	SATA Hot Plug SFF (2.5-inch) Entry (ETY) Drives	
	HP 250GB 3G SATA 5.4K rpm SFF (2.5-inch) Entry 1yr Warranty Hard Drive	460355-B21
	HP 120GB 1.5G SATA 5.4K rpm SFF (2.5-inch) Entry 1yr Warranty Hard Drive	458924-B21
	NOTE: SATA drives have a 1 year warranty. Please see the QuickSpecs for Technical Specifications and additional information: http://h18000.www1.hp.com/products/quickspecs/13021_div/13021_div.html (Worldwide)	
	SATA Hot Plug Midline (MDL) Solid State Drives	
	HP 60GB 3G SATA SFF (2.5-inch) Midline 1yr Warranty Solid State Drive	572071-B21
	HP 120GB 3G SATA SFF (2.5-inch) Midline 1yr Warranty Solid State Drive	572073-B21
	NOTE: Please see the QuickSpecs for Technical Specifications and additional information: http://h18000.www1.hp.com/products/quickspecs/13415_div/13415_div.html (Worldwide)	
HP Networking	Gigabit Ethernet adapters	
	HP NC112T PCIe Gigabit Server Adapter	503746-B21
	HP NC360T PCI Express Dual Port Gigabit Server Adapter	412648-B21
	HP NC364T PCI Express Quad Port Gigabit Server Adapter	435508-B21
	NOTE: There is a maximum of five NC364T PCI Express Quad Port Gigabit Server Adapter NICs allowed in this server.	
	HP NC373F PCI Express Multifunction Gigabit Server Adapter	394793-B21
	HP NC373T PCI Express Multifunction Gigabit Server Adapter	394791-B21
	HP NC382T PCI Express Dual Port Multifunction Gigabit Server Adapter	458492-B21
	10 Gigabit Ethernet Adapters	
	NOTE: No more than two 10GbE I/O devices are supported in a single ProLiant server.	
	NOTE: A minimum of two Gigabytes (2 GB) of server memory is required per each adapter.	
	NOTE: Direct Attach Cable (DAC) for copper environments or fiber transceivers and cables for fiber-optic environments must be purchased separately.	
	HP NC522SFP Dual Port 10GbE Server Adapter	468332-B21
	NOTE: Please see the QuickSpecs for Technical Specifications and additional information: www.hp.com/go/ProLiantNICs.	

Core Options

HP InfiniBand	HP IB 4X DDR PCI-e Dual Port HCA	409376-B21
	HP IB 4X DDR PCI-e DUAL PORT 0 mem HCA	483513-B21
	NOTE: Please see the QuickSpecs for additional information: http://h18000.www1.hp.com/products/quickspecs/13078_div/13078_div.html	
HP Power Supplies	NOTE: Prior to making a power supply selection it is highly recommended that the HP Power Advisor is run to determine the right size power supply for your server configuration. The HP Power Advisor is located at: www.hp.com/go/hppoweradvisor NOTE: If you require a local power cord, please check the Power Specifications below for the appropriate country-specific power cord, or consult the Power Cord Matrix: http://www.hp.com/go/powercordmatrix.	
	910W (low line), 1300W (high line) Hot Plug Redundant Power Supply US - includes Nema 5-15P to IEC320-C19 power cord	348114-001
	910W (low line), 1300W (high line) Hot Plug Redundant Power Supply - includes C14 to C19 IEC power jumper cable	348114-B21

NOTE: Some options may not be integrated at the factory. To ensure only valid configurations are ordered, HP recommends the use of an HP approved configurator. Contact your local sales representative for additional information.

HP Insight Software	HP Insight Control	
	HP Insight Control, Single-Server License including 1 year of 24x7 Technical Support and Updates	452148-B22
	HP Insight Control suite, No Media, Electronic License including 1 year of 24x7 Technical Support and Updates	T9074BAE
	HP Insight Control, Electronic License for bundling with ProLiant ML/DL server, including 1 year of 24x7 Technical Support and Updates	TC278AAE
	HP Insight Control, Tracking License for bundling with ProLiant ML/DL server, including 1 year of 24x7 Technical Support and Updates	TC275A
	HP Insight Software Media Kit NOTE: Insight Software DVD media without licenses. Contains HP Systems Insight Manager, HP Insight Control, HP Insight Dynamics, HP Insight Control for Microsoft System Center, and Virtual Connect Enterprise Manager software. Uses an integrated installer to perform quick and accurate software installation and updates.	436222-B21
	NOTE: Electronic and Flexible-Quantity licenses can be used to purchase multiple licenses with a single activation key. NOTE: Electronic software is available in all countries except China and Japan. Customers in China and Japan should order the physical equivalent. NOTE: Customer will receive a license entitlement certificate. The license entitlement certificate must be redeemed online or via fax in order to obtain the license activation key(s). Includes one year of 24 x 7 HP Software Technical Support and Update Service. NOTE: Licenses ship without media. The HP Insight Control Media Kit can be ordered separately, or can be downloaded at: http://www.hp.com/go/insightupdates. NOTE: For additional license options please see the Insight Control QuickSpecs at: http://h18000.www1.hp.com/products/quickspecs/12631_div/12631_div.html	
	HP Insight Control for Linux	
	HP Insight Control for Linux, 1-server license, including one year of 24x7 Technical Support and Updates, Electronic	TC213AAE
	HP Insight Control for Linux, No Media, 1-Server license, including one year of 24x7 Technical Support and Updates	TC209A
	HP Insight Control for Linux, Media pack (DVD) - No licenses included NOTE: Media pack DVD contains the ISO image for HP Insight Control for Linux, HP Systems Insight Manager, HP Insight Control power management, HP Insight Control virtual machine management, and an integrated installer. Servers must be acquired separately.	TC208A
	NOTE: Licenses ship without media. The Media Kit for Insight Control for Linux can be ordered separately, or can be downloaded at: http://www.hp.com/go/ic-linux (click on Download button). NOTE: Electronic software is available in all countries except China and Japan. Customers in China and Japan should order the physical equivalent. NOTE: Electronic and Flexible-Quantity licenses can be used to purchase multiple licenses with a single set of activation keys. NOTE: For additional License Kits, including electronic licensing options, please see the QuickSpecs at: http://h18000.www1.hp.com/products/quickspecs/13019_div/13019_div.html	

HP Integrated Lights-Out (iLO) Advanced

HP Integrated Lights-Out Advanced, No Media, 1-Server License, including 1 year of 24x7 Technical Support and Updates — 512485-B21

HP ProLiant Essentials Integrated Lights-Out Advanced Pack, Electronic, including 1 year of 24x7 Technical Support and Updates — TA850AAE

NOTE: This license allows 1 server to be deployed and managed via HP iLO Advanced. Customer will receive a printed license entitlement certificate via physical shipment. The license entitlement certificate must be redeemed online or via fax in order to obtain the license activation key(s). Includes one year of 24 x 7 HP Software Technical Support Service

NOTE: Electronic software is available in all countries except China and Japan. Customers in China and Japan should order the physical equivalent.

NOTE: For additional license kits, including electronic delivery options, please see the QuickSpecs at:
http://h18000.www1.hp.com/products/quickspecs/12362_div/12362_div.html

HP Insight Control server deployment

HP Insight Control server deployment Electronic License including 1 year 24x7 Technical Support and Updates — T9082AAE

HP Insight Control server deployment 1-Server License including 1 year 24x7 Technical Support and Updates — 452151-B21

NOTE: Licenses ship without media. The Insight Control Media Kit can be ordered separately, or can be downloaded at: http://www.hp.com/go/insightupdates.

NOTE: Electronic licenses can be used to purchase multiple licenses with a single activation key, and is available in all countries except China and Japan. Customers in China and Japan should order the physical equivalent.

NOTE: Customer will receive a license entitlement certificate, which must be redeemed online or via fax in order to obtain the license activation key(s). Includes one year of 24 x 7 HP Software Technical Support Service.

NOTE: For additional license kits please see the Insight Control QuickSpecs at:
http://h18004.www1.hp.com/products/quickspecs/12631_div/12631_div.html

---

HP Storage Controllers

SAS Controller

Smart Array E500 Controller

HP Smart Array E500/256 2-ports Ext PCIe x8 SAS Controller — 435129-B21

Smart Array P400 Controller

HP Smart Array P400/256 2-ports Int PCIe x8 SAS Controller — 405132-B21

NOTE: The Smart Array P400 Controller supports internal Serial Attached SCSI and Serial ATA drives. It is supported in all HP ProLiant DL585 G5 Models.

HP Smart Array P400 512MB Battery Kit — 411064-B21

NOTE: The Smart Array P400 Controller supports internal Serial Attached SCSI and Serial ATA drives. It is supported in all HP ProLiant DL585 G5 Models.

Smart Array P600 Controller

HP Smart Array P600/256 1-ports Int/2-ports Ext PCI-X SAS Controller — 337972-B21

NOTE: The Smart Array P600 Controller supports internal and external Serial Attached SCSI and Serial ATA drives. It is supported in all HP ProLiant DL585 G5 Models.

Smart Array P800 Controller

HP Smart Array P800/512 BBWC 2-ports Int/2-ports Ext PCIe x8 SAS Controller	381513-B21
Smart Array P212 Controller	
HP Smart Array P212/ZM 1-ports Int/1-ports Ext PCIe x8 SAS Controller	462828-B21
Smart Array P410 Controller	
HP Smart Array P410/256 2-ports Int PCIe x8 SAS Controller	462862-B21
HP Smart Array P410/512 BBWC 2-ports Int PCIe x8 SAS Controller	462864-B21
HP Smart Array P410/512 FBWC 2-ports Int PCIe x8 SAS Controller	578230-B21
HP Smart Array P410/1G FBWC 2-ports Int PCIe x8 SAS Controller	572532-B21
Smart Array P411 Controller	
HP Smart Array P411/256 2-ports Ext PCIe x8 SAS Controller	462830-B21
HP Smart Array P411/512 BBWC 2-ports Ext PCIe x8 SAS Controller	462832-B21
HP Smart Array P411/512 FBWC 2-ports Ext PCIe x8 SAS Controller	578229-B21
HP Smart Array P411/1G FBWC 2-ports Ext PCIe x8 SAS Controller	572531-B21
Smart Array P812 Controller	
HP Smart Array P812/1G FBWC 2-ports Int/4-ports Ext PCIe x8 SAS Controller	487204-B21
Optional Upgrades	
HP Smart Array P400 Battery Attach Kit NOTE: This option kit contains a 24" battery cable and adhesive material for installing a battery into the server if a Smart Array P400 is integrated outside of the factory or if the BBWC is not pre-installed from the factory. For all solutions, please refer to the server QuickSpecs and User's Manual for detailed installation instructions.	417836-B21
HP 512MB w/Battery Smart Array Battery Back Write Cache Enabler NOTE: For Smart Array P400 Controller only. NOTE: If you install the 512MB DDR BBWC as an upgrade to a Smart Array P400/256MB Controller, you must also order part 417836-B21 (HP SA-P400 and SA-E500 24 In Battery Cable Kit).	405148-B21
HP Smart Array Cache Battery Kit NOTE: For Smart Array P400 Controller only. NOTE: If you install the Battery-backed write cache as an upgrade to a Smart Array P400/256MB Controller, you must also order part 417836-B21 (HP SA-P400 and SA-E500 24 In Battery Cable Kit).	383280-B21
HP Smart Array Controller 512MB Battery Backed Write Cache NOTE: For Smart Array P600 Controller only.	372538-B21
HP 256MB P-series Cache Upgrade NOTE: Supported on HP Smart Array P212 Controller only.	462968-B21
HP 512MB P-Series Battery Backed Write Cache Upgrade NOTE: Supported on HP Smart Array P410 Controller and HP Smart Array P411 Controller only.	462967-B21
HP 512MB Flash Backed Write Cache	534916-B21
HP 1GB Flash Backed Cache	534562-B21
HP Smart Array Advanced Pack including 1yr 24x7 Technical Support and Updates Single Server License NOTE: This part number can be used to purchase a single license or to order multiple licenses with a single activation key. Customers will receive a license entitlement certificate via e-mail. The license entitlement certificate must be redeemed online or	516471-B21

via fax in order to obtain the license activation key(s). Include one year of 24x7 HP Software Technical Support Services.

NOTE: Please see the QuickSpecs for Technical Specifications and additional information:
http://h18000.www1.hp.com/products/quickspecs/12700_div/12700_div.html (Smart Array E500 Controller)
http://h18000.www1.hp.com/products/quickspecs/12400_div/12400_div.html (Smart Array P400 Controller)
http://h18000.www1.hp.com/products/quickspecs/12247_div/12247_div.html (Smart Array P600 Controller)
http://h18000.www1.hp.com/products/quickspecs/12616_div/12616_div.html (Smart Array P800 Controller)
http://h18000.www1.hp.com/products/quickspecs/13203_div/13203_div.html (Smart Array P212 Controller)
http://h18000.www1.hp.com/products/quickspecs/13201_div/13201_div.html (Smart Array P410 Controller)
http://h18000.www1.hp.com/products/quickspecs/13202_div/13202_div.html (Smart Array P411 Controller)
http://h18000.www1.hp.com/products/quickspecs/13558_div/13558_div.html (Smart Array P812 Controller)
http://h18000.www1.hp.com/products/quickspecs/13200_div/13200_div.html (Smart Array Advanced Pack)

SAS HBA

HP SC08Ge 2-ports Ext PCIe x8 SAS Host Bus Adapter	488765-B21
HP Modular Smart Array SC44Ge 1-ports Int/1-ports Ext PCIe x8 SAS Host Bus Adapter NOTE: When using the SC44Ge with SATA Hard Drives, 1.5G SATA Hard Drives are required. Transfer rate: 1.5 Gb/s SATA, 3 Gb/s SAS.	416096-B21
HP 64/133 2-ports Int PCI-X SAS Host Bus Adapter NOTE: When using the 8 Internal Port SAS HBA with SATA Hard Drives, 1.5G SATA Hard Drives are required. Transfer rate: 1.5 Gb/s SATA, 3 Gb/s SAS. NOTE: Transfer rate 1.5 Gb/s SATA, 3Gb/s SAS.	347786-B21

NOTE: Please see the QuickSpecs for Technical Specifications and additional information:
http://h18004.www1.hp.com/products/quickspecs/13082_div/13082_div.html (SC08Ge HBA)
http://h18004.www1.hp.com/products/quickspecs/12617_div/12617_div.html (SC44Ge HBA)
http://h18004.www1.hp.com/products/quickspecs/12332_div/12332_div.html (8 Internal Port SAS HBA)

SCSI HBA

HP SC11Xe Ultra320 Single Channel/ PCIe x4 SCSI Host Bus Adapter NOTE: Recommended HBA for SCSI tape drive connect.	412911-B21

NOTE: Please see the following QuickSpecs for Technical Specifications and additional information:
http://h18000.www1.hp.com/products/quickspecs/12566_div/12566_div.html (SC11Xe HBA)

Additional Options

HP Power Cords	DL585G5 C19-C14 PWRCRD 10FT ALL	313228-B21

HP Tape Backup	NOTE: For the complete range of StorageWorks tape drives, autoloaders, libraries and media see: http://www.hp.com/go/tape. For hardware and software compatibility of HP StorageWorks tape backup products see: http://www.hp.com/go/connect.	
	DAT 160 SAS Internal Tape Drive NOTE: Supported by the 1U SAS and 3U SAS Rack-Mount Kits.	Q1587A
	HP StorageWorks 1/8 G2 LTO-4 Ultrium 1760 SAS Tape Autoloader NOTE: Requires HP 1U Tape Autoloader Rack Kit (AH166A) for rack installation. Connection using HP SC44Ge SAS Host Bus Adapter (416096-B21) recommended.	AK377A
	HP StorageWorks 1/8 G2 LTO-3 Ultrium 920 SAS Tape Autoloader NOTE: Requires HP 1U Tape Autoloader Rack-Mount Kit (AH166A) for rack installation. Connection using HP Smart Array P212 Controller (462828-B21) recommended.	AH558A
	HP StorageWorks 1/8 G2 LTO-2 Ultrium 448 Tape Autoloader	AH164A
	HP StorageWorks 1U USB Rack-Mount Kit with one DAT 160 USB drive	AG703A
	DAT 320 SAS External Tape Drive	AJ828A
	DAT 320 USB External Tape Drive	AJ823A
	HP StorageWorks DAT 320 SAS Internal Tape Drive NOTE: For installation into 1U SAS rack kit (AE459B) or 3U SAS rack kit (AG576B). No peripheral bay available for installation into the server. Connection using the HP SC44Ge SAS Host Bus Adapter (416096-B21) recommended.	AJ830A
	HP StorageWorks LTO-3 Ultrium 920 SAS Internal Tape Drive NOTE: For installation into 1U SAS rack kit (AE459B) or 3U SAS rack kit (AG576B). No peripheral bay available for installation into the server. Connection using the HP SC44Ge SAS Host Bus Adapter (416096-B21) recommended.	EH847A
	HP StorageWorks LTO-4 Ultrium 1760 Internal Tape Drive NOTE: For installation into 1U SAS rack kit (AE459B) or 3U SAS rack kit (AG576B). No peripheral bay available for installation into the server. Connection using the HP SC44Ge SAS Host Bus Adapter (416096-B21) recommended.	EH919A
	HP StorageWorks LTO-4 Ultrium 1840 Internal Tape Drive NOTE: For installation into 3U SAS rack kit (AG576B). No peripheral bay available for installation into the server. Connection using the HP SC44Ge SAS Host Bus Adapter (416096-B21) recommended.	EH860A
	HP StorageWorks LTO-5 Ultrium 3280 Internal Tape Drive NOTE: For installation into 3U SAS rack kit (AG576B). No peripheral bay available for installation into the server. Connection using the HP SC44Ge SAS Host Bus Adapter (416096-B21) recommended.	EH899A
	HP StorageWorks LTO-2 Ultrium 448 SAS Internal Tape Drive	DW085A
	HP Ultrium1840 SCSI 1-Drive 3U Rackmount	EH926A
	HP Ultrium 448 SCSI in 1U Rack 1 Drive	DW028B
	HP Ultrium 920 SCSI 1-Drive 1U Rackmount	EH903A
	HP MSL2024 0-Drive Tape Library	AK379A
	HP MSL2024 1 LTO-4 Ultr 1760 SAS Library	AK378A
	HP MSL2024 1 LTO-4 Ultrium 1840 Tape Lib	AJ033A

Additional Options

HP MSL2024 Ultr 920 SAS Tape Library	AH559A
HP MSL4048 0-Drive Tape Library	AK381A
HP MSL4048 1 LTO-4 Ultrium 1840 Tape Lib	AJ035A
HP MSL4048 2 LTO-4 Ultr 1760 SAS Library	AK380A
HP MSL8048 0-drive 48 Slot Tape Library	AU300A
HP MSL8096 2 LTO-4 Ultr 1760 SAS Library	AK382A

HP Disk Backup

NOTE: For the complete range of StorageWorks D2D Backup Systems see: http://www.hp.com/go/d2d. For the complete range of StorageWorks RDX drives and media see: http://www.hp.com/go/rdx. For hardware and software compatibility of HP StorageWorks disk backup products see: http://www.hp.com/go/connect.

HP StorageWorks RDX Removable Disk Backup Systems USB

HP StorageWorks RDX160 External Removable Disk Backup System	AJ766A
HP StorageWorks RDX320 External Removable Disk Backup System	AJ768A
HP StorageWorks RDX500 External Removable Disk Backup System	AJ935A
HP StorageWorks RDX500 Internal Removable Disk Backup System NOTE: For installation into 1U USB Rack-Mount Kit (A8007A). No peripheral bay available for drive installation into the server. 500GB of disk capacity per data cartridge.	AJ934A
HP StorageWorks RDX750 Internal Removable Disk Backup System NOTE: For installation into 1U USB Rack-Mount Kit (A8007A). No peripheral bay available for drive installation into the server. 750GB of disk capacity per data cartridge.	AW577A
HP StorageWorks RDX 1TB Internal Removable Disk Backup System NOTE: For installation into 1U USB Rack-Mount Kit (A8007A). No peripheral bay available for drive installation into the server. 1 TB of disk capacity per data cartridge.	BV847A

HP StorageWorks Options

StorageWorks Fibre Channel HBAs

NOTE: The following is a list of all Fibre Channel Host Bus Adapters for Windows and Linux. For detailed compatibility information please see: http://h18006.www1.hp.com/storage/saninfrastructure/hba.html

Brocade Fibre Channel HBAs

HP StorageWorks 81B PCI-e FC HBA Single Port	AP769A
HP StorageWorks 82B PCI-e FC HBA Dual Port	AP770A
HP StorageWorks 41B 4Gb PCI-e FC HBA	AP767A
HP StorageWorks 42B 4Gb Dual-Port PCI-e FC HBA	AP768A

Emulex Fibre Channel HBAs

HP StorageWorks 81E PCI-e FC HBA Single Port	AJ762A
HP StorageWorks 82E PCI-e FC HBA Dual Port	AJ763A
HP StorageWorks FC2142 4Gb PCI-e HBA	A8002A
HP StorageWorks FC2242 Dual Channel 4Gb PCI-e HBA	A8003A

QLogic Fibre Channel HBAs

HP StorageWorks 81Q PCI-e FC HBA Single Port	AK344A

Additional Options

	HP StorageWorks 82Q PCI-e FC HBA Dual Port	AJ764A
	HP StorageWorks FC1142 4Gb PCI-e HBA	AE311A
	HP StorageWorks FC1242 Dual Channel 4Gb PCI-e HBA	AE312A
	StorageWorks SCSI HBA	
	HP U320e SCSI Host Bus Adapter NOTE: Recommended HBA for MSL SCSI Tape Library connect.	AH627A
	StorageWorks Converged Network Adapter	
	HP CN1000E 2P Converged Network Adapter	AW520A
HP Modular Smart Array	**MSA SAN Storage Arrays**	
	HP StorageWorks 50 Modular Smart Array	364430-B21
	NOTE: Please see the QuickSpecs for additional options and configuration information at: http://h18000.www1.hp.com/products/quickspecs/12245_div/12245_div.html (Worldwide)	
	HP StorageWorks 60 Modular Smart Array	418408-B21
	NOTE: Supports 12 SFF drives, and SAS 3 Gb/s and SATA 1.5 Gb/s. NOTE: Please see the QuickSpecs for additional options and configuration information at: http://h18000.www1.hp.com/products/quickspecs/12627_div/12627_div.html (Worldwide)	
	HP StorageWorks 70 Modular Smart Array	418800-B21
	NOTE: Supports 25 SFF drives, and SAS 3 Gb/s and SATA 1.5 Gb/s. NOTE: Please see the QuickSpecs for additional options and configuration information at: http://h18000.www1.hp.com/products/quickspecs/12652_div/12652_div.html (Worldwide)	
	Disk Enclosures	
	HP StorageWorks D2600 Disk Enclosure	AJ940A
	HP StorageWorks D2700 Disk Enclosure	AJ941A
	NOTE: Please see the QuickSpecs for additional information including configuration steps and additional options needed for a complete solution at: http://h18000.www1.hp.com/products/quickspecs/13404_div/13404_div.html (Worldwide)	

Additional Options

HP Uninterruptible Power Systems	**HP R1500 G2 UPS**	
	HP, R1.5kVA UPS, 1U, NA	AF419A
	HP, R1.5kVA UPS, 1U, INTL	AF418A
	HP, R1.5kVA UPS, 1U, JPN/TW	AF421A
	NOTE: Please see QuickSpecs for additional information: http://h18000.www1.hp.com/products/quickspecs/12507_div/12507_div.html (Worldwide)	
	HP R/T3000 Uninterruptible Power System (UPS)	
	HP R/T3000 UPS, Low voltage NA/JPN	AF452A
	HP R/T3000 UPS, High voltage, NA/JPN	AF453A
	HP R/T3000 UPS, High voltage, detachable inlet cord INTL	AF454A
	NOTE: Please see the QuickSpecs for additional information: http://h18000.www1.hp.com/products/quickspecs/13417_div/13417_div.html (Worldwide)	
	HP Rack-Mountable R5500 UPS	
	HP R5500 VA UPS, INTL	AF416A
	HP R5500 VA UPS, NA/JPN	AF426A
	NOTE: Please see QuickSpecs for additional information: http://h18000.www1.hp.com/products/quickspecs/11871_div/11871_div.html (Worldwide)	
	NOTE: For additional information on HP Uninterruptible Power Systems please go to: www.hp.com/servers/rackups.	
	NOTE: For additional information on sizing your server, please reference: http://www.upssizer.com.	
	NOTE: Please see the UPS and PDU cable matrix's on the HP Power Protection and Management page. Under Power Cords, click on the "HP Power Cord Matrix" link. That link will list cable descriptions, requirements, and specifications for UPS and PDU units. Please see the following link: www.hp.com/products/powercords.	
HP Power Distribution Units	**Monitored PDUs**	
	HP Monitored Power Distribution Unit: Full Rack Version	
	HP 17.3 kVA S2324 Monitored PDU- dual input, 3Ø, 24A (NA/JPN)	AF503A
	HP 8.6 kVA S1324 Monitored PDU- single input, 3Ø, 24A (NA/JPN)	AF504A
	HP 16.6 kVA S2140 Monitored PDU- dual input, 1Ø, 40A (NA/JPN)	AF505A
	HP 8.3 S1140 Monitored PDU- single input, 1Ø, 40A (NA/JPN)	AF506A
	HP 22.1 kVA S2316 Monitored PDU- dual input, 3Ø, 16A (INTL)	AF507A
	HP 11 kVA S1316 Monitored PDU- single input, 3Ø, 16A (INTL)	AF508A
	HP 14.7 kVA S2132 Monitored PDU- dual input, 1Ø, 32A (INTL)	AF509A
	HP 7.3 kVA S1132 Monitored PDU- single input, 1Ø, 32A (INTL)	AF510A
	HP Monitored Power Distribution Unit: Half Rack Version	
	HP 17.3 kVA S348 Monitored PDU- single input, 3Ø, 48A (NA/JPN)	AF916A
	HP 22 kVA S332 Monitored PDU - single input, 3-phase, 32A (INTL)	AF917A
	HP 4.9 kVA S124 Monitored PDU- single input, 1Ø, 24A (NA/JPN)	AF914A

Additional Options

	HP 7.3 kVA S132 Monitored PDU- single input, 1Ø, 32A (INTL)	AF915A
	Modular Power Distribution Units 1U/0U (Up to 32 outlets) NOTE: 1U/0U mounting brackets shipped with the unit (optimized for 10000 G2 and 9000 series racks).	
	2.8 kVA Modular PDU, 24A (NA/JPN)	252663-D71
	4.9 kVA Modular PDU, 24A (NP/JPN)	252663-D72
	7.3 kVA Modular PDU, 32A (INLT)	252663-B31
	8.3 kVA Modular PDU, 40A (NA/JPN) NOTE: This mPDU (252663-B21), 40A model has a hardwired input.	252663-B21
	3.6 kVA Modular PDU, 16A (NP/JPN)	252663-B24
	NOTE: For additional information on HP Power Distribution Units including accessories please go to: www.hp.com/go/pdu	
	NOTE: Please see the UPS and PDU cable matrix's on the HP Power Protection and Management page. Under Power Cords, click on the "HP Power Cord Matrix" link. That link will list cable descriptions, requirements, and specifications for UPS and PDU units. Please see the following link: www.hp.com/products/powercords.	
HP Rack Series	**HP Rack 10000 G2 Series** (Carbon/Graphite Metallic)	
	10642 G2 (42U) Rack Cabinet - Pallet	AF001A
	10642 G2 (42U) Rack Cabinet - Shock Pallet	AF002A
	HP 10642G2 1200mm deep Rack cabinet Shock Rack	AF092A
	HP 10647G2 1200mm deep Rack cabinet Shock Rack	AF094A
	S10614 (14U) Rack Cabinet - Shock Pallet	292302-B22
	NOTE: It is mandatory to use a shock pallet when shipping racks with equipment installed.	
	NOTE: Please see the QuickSpecs for Technical Specifications such as height, width, depth, weight, and color: http://h18000.www1.hp.com/products/quickspecs/12402_div/12402_div.html (Worldwide)	
	NOTE: For additional information regarding Rack Cabinets, please see the following URL: http://www.hp.com/go/rackandpower.	
	NOTE: The increasing power of new high-performance processor technology requires increased cooling efficiency for rack-mounted servers. The 10000 G2 Series Racks provide enhanced airflow for maximum cooling, allowing these racks to be fully loaded with servers using the latest processors. CAUTION: If a third-party rack is used, observe the following additional requirements to ensure adequate airflow and to prevent damage to the equipment: Front and rear doors: If your 42U server rack includes closing front and rear doors, you must allow 830 square inches (5,350 sq cm) of hole evenly distributed from top to bottom to permit adequate airflow (equivalent to the required 64 percent open area for ventilation). Side: The clearance between the installed rack component and the side panels of the rack must be a minimum of 2.75 inches (7 cm). CAUTION: Always use blanking panels to fill all remaining empty front panel U-spaces in the rack. This arrangement ensures proper airflow. Using a rack without blanking panels results in improper cooling that can lead to thermal damage.	

NOTE: Quick deploy rail system provides tool-free support for racks with square or round mounting holes (including Compaq/HP 7000, 9000, 10000 G2 and HP series), with an adjustment range of 24" - 36". The ambidextrous cable management arm can be mounted on either the left or right side for improved cable management.

HP Rack Options	Keyboards and Monitors	
	HP TFT7600 G2 KVM Console Rackmount Keyboard US Monitor	AZ870A
	HP TFT7600 G2 KVM Console Rackmount Keyboard UK Monitor	AZ871A
	HP TFT7600 G2 KVM Console Rackmount Keyboard DE Monitor	AZ872A
	HP TFT7600 G2 KVM Console Rackmount Keyboard FR Monitor	AZ873A
	HP TFT7600 G2 KVM Console Rackmount Keyboard IT Monitor	AZ874A
	HP TFT7600 G2 KVM Console Rackmount Keyboard ES Monitor	AZ875A
	HP TFT7600 G2 KVM Console Rackmount Keyboard DK Monitor	AZ876A
	HP TFT7600 G2 KVM Console Rackmount Keyboard NO Monitor	AZ877A
	HP TFT7600 G2 KVM Console Rackmount Keyboard SE/FI Monitor	AZ878A
	HP TFT7600 G2 KVM Console Rackmount Keyboard CH Monitor	AZ879A
	HP TFT7600 G2 KVM Console Rackmount Keyboard PT Monitor	AZ880A
	HP TFT7600 G2 KVM Console Rackmount Keyboard BE Monitor	AZ881A
	HP TFT7600 G2 KVM Console Rackmount Keyboard JP Monitor	AZ882A
	HP TFT7600 G2 KVM Console Rackmount Keyboard RU Monitor	AZ883A
	HP TFT7600 G2 KVM Console Rackmount Keyboard Intl Monitor	AZ884A
	HP TFT7600 G2 KVM Console Rackmount Keyboard US TAA Monitor	AZ885A
	NOTE: Please see the QuickSpecs for Technical Specifications and additional information: http://h18000.www1.hp.com/products/quickspecs/13731_div/13731_div.html (Worldwide)	
	TFT7600 Rackmount Keyboard Monitor US	AG052A
	TFT7600 Rackmount Keyboard Monitor UK	AG053A
	TFT7600 Rackmount Keyboard Monitor GR	AG054A
	TFT7600 Rackmount Keyboard Monitor FR	AG055A
	TFT7600 Rackmount Keyboard Monitor IT	AG056A
	TFT7600 Rackmount Keyboard Monitor SP	AG057A
	TFT7600 Rackmount Keyboard Monitor DEN	AG058A
	TFT7600 Rackmount Keyboard Monitor NOR	AG059A
	TFT7600 Rackmount Keyboard Monitor SE/FI	AG060A
	TFT7600 Rackmount Keyboard Monitor SWI	AG061A
	TFT7600 Rackmount Keyboard Monitor PORT	AG062A
	TFT7600 Rackmount Keyboard Monitor BEL	AG063A
	TFT7600 Rackmount Keyboard Monitor JPN2	AG064A
	TFT7600 Rackmount Keyboard Monitor RUS	AG065A
	TFT7600 Rackmount Keyboard Monitor INTL	AG066A
	HP TAA TFT7600 US Rkmntkybd 17in Monitor	AG067A

NOTE: Please see the QuickSpecs for Technical Specifications and additional information: http://h18000.www1.hp.com/products/quickspecs/12417_div/12417_div.html (Worldwide)	
1U Rackmount Keyboard with USB, US	AG072A
1U Rackmount Keyboard with USB, UK	AG073A
1U Rackmount Keyboard with USB, GR	AG074A
1U Rackmount Keyboard with USB, FR	AG075A
NOTE: Please see the QuickSpecs for Technical Specifications and additional information: http://h18000.www1.hp.com/products/quickspecs/12465_div/12465_div.html (Worldwide)	
HP Server Console Switches	
HP Server console switch 0x2x8	AF616A
HP Server console switch 0x2x16	AF617A
NOTE: Please see the QuickSpecs for Technical Specifications and additional information: http://h18000.www1.hp.com/products/quickspecs/11834_div/11834_div.html (Worldwide)	
HP Server Console Switch G2 with Virtual Media & CAC	
0x2x16 KVM Server Console G2 Switch with Virtual Media and CAC	AF618A
0x2x32 KVM Server Console G2 Switch with Virtual Media and CAC	AF619A
NOTE: Please see the QuickSpecs for Technical Specifications and additional information: http://h18000.www1.hp.com/products/quickspecs/13475_div/13475_div.html (Worldwide)	
HP IP Console Switch G2 with Virtual Media & CAC	
1x1Ex8 KVM IP Console Switch G2 with Virtual Media and CAC	AF620A
2x1Ex16 KVM IP Console Switch G2 with Virtual Media and CAC	AF621A
4x1Ex32 KVM IP Console Switch G2 with Virtual Media and CAC	AF622A
NOTE: Please see the QuickSpecs for Technical Specifications and additional information: http://h18000.www1.hp.com/products/quickspecs/13474_div/13474_div.html (Worldwide)	
NOTE: For additional information regarding Rack Options, please see the following URL: http://www.hp.com/go/rackandpower.	
HP 1x4 Server Switch	AF611A
PS2 Server Console Cable, 6 ft, 2 pack	AF612A
USB Server Console Cable, 6 ft, 2 pack	AF613A
NOTE: For additional information regarding KVM switches, Serial Console servers, rack mount monitors, keyboards and all related options please see the following URL: http://www.hp.com/go/kvm.	

Additional Options

HP USB and SD Options	HP USB 2-Button Optical Scroll Mouse (Carbonite/Silver)	DC172B
	HP USB 04 Standard Keyboard	DT528A#ABA
	HP 2GB USB Flash Media Drive Key Kit NOTE: HP qualified blank USB key for use with HP ProLiant servers that support the VMware virtualization environment and other HP value-add software like SmartStart. HP recommends this industry standard USB flash device for use with VMware ESXi. USB device must be installed in the internal slot of the ProLiant server for use with VMware ESXi. Refer to HP VMware Getting Started Guide for installation instructions.	608447-B21
HP Care Pack Services	Hardware Services On-site Service	
	4-Hour On-site Service, 5-Day x 13-Hour Coverage, 3 Years, Electronic	U4607E
	4-Hour On-site Service, 7-Day x 24-Hour Coverage, 3 Years, Electronic	U4608E
	Hardware Services 6-Hour Call to Repair On-site Service	
	6-Hour Call to Repair, On-site Service, 7-Day x 24-Hour Coverage, 3 Years, Electronic	U4609E
	Installation & Start-up Services	
	Hardware Installation, Electronic	U4617E
	Installation & Start-Up of a ProLiant server and Microsoft or Linux O/S per the Customer Description and/or Data Sheet. To be delivered on a scheduled basis 8am-5pm, M-F, excl. HP holidays, Electronic	U4618E
	Support Plus	
	Onsite HW support, 8am-9pm, M-F, 4hr response and Microsoft O/S SW Tech support offsite, onsite at HP's discretion, 8am-9pm, M-F 2hr response time excl. HP holidays, Electronic	U4619E
	Support Plus 24	
	Onsite HW support 24x7, 4hr response and Microsoft O/S SW Tech support offsite, onsite at HP's discretion, 24x7 2hr response time incl. HP holidays, Electronic	U4620E
	Onsite HW support 24x7, 4hr response and SuSE Linux SW Tech support offsite, onsite at HP's discretion, 24x7 2hr response time incl. HP holidays, Electronic	U6316E
	NOTE: For more information, customer/resellers can contact: http://www.hp.com/services/carepack.	

Memory

NOTE: Standard memory configurations listed do not apply to "Factory Integrated Models."

HP ProLiant DL585 G5 Models

Standard Memory (One of the following, depending on Model)
16 GB PC2-5300 DDR2 SDRAM memory running at 667 MHz
16 GB PC2-6400 DDR2 SDRAM memory running at 800 MHz
8 GB PC2-5300 DDR2 SDRAM memory running at 667 MHz
8 GB PC2-6400 DDR2 SDRAM memory running at 800 MHz
4 GB PC2-5300 DDR2 SDRAM memory running at 667 MHz

- DIMMs must be installed in pairs.
- DIMM installed on the same memory bank must have the same part number.
- DIMMs installed in different banks can be of different sizes.
- DIMMs must be installed in decreasing capacity with the largest DIMMs installed in the banks furthest away from each processor.
- DIMM banks are active only when the corresponding processor socket is populated.

NOTE: Memory must be installed in like-pairs, i.e. two of the same size.
NOTE: 800MHz memory kits are supported on models configured with Opteron 8386 SE , 8384, 8382, 8380, 8378, 8376 HE processors. Memory bus speeds will operate as follows: 2-4 DIMMs at 800MHz; 6 at 667MHz; 8 at 533MHz. PC2-5300 memory modules operate at 667MHz with up to 4 DIMMs and 533MHz when using additional DIMMs.

Standard Memory Configuration (2.2GHz model) Total Memory = 4 GB								
	1 (Slot furthest from processor)	2	3	4	5	6	7	8 (Slot closest to processor)
Processor 1 Memory Bus	1 GB	1 GB	Empty	Empty	Empty	Empty	Empty	Empty
Processor 2 Memory Bus	1 GB	1 GB	Empty	Empty	Empty	Empty	Empty	Empty
Processor 3 Memory Bus	Empty	Empty	Empty	Empty	Empty	Empty	Empty	Empty
Processor 4 Memory Bus	Empty	Empty	Empty	Empty	Empty	Empty	Empty	Empty

Standard Memory Configuration (2.3GHz model) Total Memory = 8 GB								
	1 (Slot furthest from processor)	2	3	4	5	6	7	8 (Slot closest to processor)
Processor 1 Memory Bus	1 GB	1 GB	Empty	Empty	Empty	Empty	Empty	Empty
Processor 2 Memory Bus	1 GB	1 GB	Empty	Empty	Empty	Empty	Empty	Empty
Processor 3 Memory Bus	1 GB	1 GB	Empty	Empty	Empty	Empty	Empty	Empty

Memory

Processor 4 Memory Bus	1 GB	1 GB	Empty	Empty	Empty	Empty	Empty	Empty
Standard Memory Configuration (2.4GHz and 2.5GHzmodels) Total Memory = 16 GB								
	1 (Slot furthest from processor)	2	3	4	5	6	7	8 (Slot closest to processor)
Processor 1 Memory Bus	2 GB	2 GB	Empty	Empty	Empty	Empty	Empty	Empty
Processor 2 Memory Bus	2 GB	2 GB	Empty	Empty	Empty	Empty	Empty	Empty
Processor 3 Memory Bus	2 GB	2 GB	Empty	Empty	Empty	Empty	Empty	Empty
Processor 4 Memory Bus	2 GB	2 GB	Empty	Empty	Empty	Empty	Empty	Empty

Examples of other optional configurations include, but are not limited to:

Example #1: Optional Memory Configuration with DIMM mixing Standard Memory plus Optional Memory and Processors Total Memory = 34 GB								
	1	2	3	4	5	6	7	8
Processor 1 Memory Bus	2 GB	2 GB	1 GB	1 GB	512 MB	512 MB	512 MB	512 MB
Processor 2 Memory Bus	2 GB	2 GB	1 GB	1 GB	512 MB	512 MB	512 MB	512 MB
Processor 3 Memory Bus	2 GB	2 GB	2 GB	2 GB	1 GB	1 GB	512 MB	512 MB
Processor 4 Memory Bus	1 GB	1 GB	1 GB	1 GB	1 GB	1 GB	512 MB	512 MB
Example #2: Optional Memory Configuration with Partial Bus Population Standard Memory plus Optional Memory and Processors Total Memory = 8 GB								
	1	2	3	4	5	6	7	8
Processor 1 Memory Bus	512 MB	512 MB	512 MB	512 MB	Empty	Empty	Empty	Empty
Processor 2 Memory Bus	512 MB	512 MB	512 MB	512 MB	Empty	Empty	Empty	Empty
Processor 3 Memory Bus	512 MB	512 MB	512 MB	512 MB	Empty	Empty	Empty	Empty
Processor 4 Memory Bus	512 MB	512 MB	512 MB	512 MB	Empty	Empty	Empty	Empty

Memory

Example #3: Maximum Memory Configuration Maximum Memory (Standard replaced with Optional Memory) Total Memory = 256 GB								
	1	2	3	4	5	6	7	8
Processor 1 Memory Bus	8 GB	8 GB	8 GB	8 GB	8 GB	8 GB	8 GB	8 GB
Processor 2 Memory Bus	8 GB	8 GB	8 GB	8 GB	8 GB	8 GB	8 GB	8 GB
Processor 3 Memory Bus	8 GB	8 GB	8 GB	8 GB	8 GB	8 GB	8 GB	8 GB
Processor 4 Memory Bus	8 GB	8 GB	8 GB	8 GB	8 GB	8 GB	8 GB	8 GB

The following memory options are available from HP:

HP Memory	HP 2GB (2x1GB) Single Rank PC2-5300 (DDR2-667) Registered Memory Kit	408851-B21
	HP 2GB (2x1GB) Single Rank PC2-6400 (DDR2-800) Registered Memory Kit	497763-B21
	HP 4GB (2x2GB) Dual Rank PC2-5300 (DDR2-667) Registered Memory Kit	408853-B21
	HP 4GB (2x2GB) Single Rank PC2-5300 (DDR2-667) Registered Low Power Memory Kit	483401-B21
	HP 4GB (2x2GB) Single Rank PC2-6400 (DDR2-800) Registered Memory Kit	497765-B21
	HP 8GB (2x4GB) Dual Rank PC2-5300 (DDR2-667) Registered Memory Kit	408854-B21
	HP 8GB (2x4GB) Dual Rank PC2-5300 (DDR2-667) Registered Low Power Memory Kit	483403-B21
	HP 8GB (2x4GB) Dual Rank PC2-6400 (DDR2-800) Registered Memory Kit	497767-B21
	HP 8GB (2x4GB) Dual Rank x4 PC2-6400 (DDR2-800) Registered Low Power Memory Kit	504351-B21
	HP 16GB (2x8GB) Dual Rank PC2-5300 (DDR2-667) Registered Memory Kit	408855-B21
	HP 64GB (8x8GB) Dual Rank PC2-5300 (DDR2-667) Registered Memory Kit	495605-B21

NOTE: Memory must be installed in like-pairs, i.e. two of the same size.

NOTE: 800MHz memory kits are supported on models configured with Opteron 8386 SE, 8384, 8382, 8380, 8378, 8376 HE processors. Memory bus speeds will operate as follows: 2-4 DIMMs at 800MHz; 6 at 667MHz; 8 at 533MHz. PC2-5300 memory modules operate at 667MHz with up to 4 DIMMs and 533MHz when using additional DIMMs.

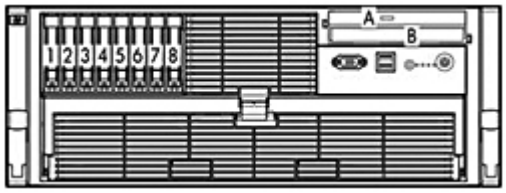

A	Ejectable: Slimline Diskette or Optical Drive (Optional)
B	Ejectable: Slimline Optical Drive (DVD/CD-RW Standard)
1-8	SFF SAS Internal Drive cage

Drive Support

	Quantity Supported	Position Supported	Controller
Ejectable Slimline Drives			
1.44-MB slimline Diskette Drive	Up to 1	A or B Based on Boot Device Selector Switch	Integrated
HP 8X/24X SlimLine DVD-ROM Drive	Up to 2	A or B	Integrated IDE
HP Slimline CD-RW/DVD-ROM 24X Carbon Combo Drive	Up to 2	A or B	Integrated IDE
HP 8X Slim DVD+RW Drive	Up to 2	A or B	Integrated IDE

Hard Drives

NOTE: The components of a storage subsystem (e.g. the drive, the HBA/controller, firmware, and the server backplane) should operate at the same data transfer rate or the system bandwidth will be negotiated down to an acceptable level for all components.

NOTE: Hard drives have either a one year or three year warranty; refer to the specific hard drive QuickSpecs for details.

SAS Hot Plug SFF (2.5-inch) Enterprise (ENT) Drives

	Quantity Supported	Position Supported	Controller
300GB 6G SAS 10K DP 146GB 6G SAS 15K DP 146GB 6G SAS 10K DP 72GB 6G SAS 15K DP	Up to 8	1-8	HP SC44Ge Host Bus Adapter NOTE: When using the SC44Ge with SATA Hard Drives, 1.5G SATA Hard Drives are required. Transfer rate: 1.5 Gb/s SATA, 3 Gb/s SAS. HP 8 Internal Port SAS HBA with RAID NOTE: Transfer rate 1.5 Gb/s SATA, 3Gb/s SAS. HP Smart Array E500/256MB Controller HP Smart Array P400/256MB Controller HP Smart Array P400/512MB BBWC Controller HP Smart Array P600/256 BBWC Controller HP Smart Array P800/512 BBWC Controller HP Smart Array P212/Zero Memory Controller HP Smart Array P212/ 256 MB Controller HP Smart Array P410/256 MB Controller HP Smart Array P410/512 MB BBWC Controller

			HP Smart Array P411/256 MB Controller HP Smart Array P411/512 MB BBWC Controller

SAS Hot Plug SFF (2.5-inch) Midline (MDL) Drives

	Quantity Supported	Position Supported	Controller
500GB 6G SAS 7.2K DP	Up to 8	1-8	HP SC44Ge Host Bus Adapter NOTE: When using the SC44Ge with SATA Hard Drives, 1.5G SATA Hard Drives are required. Transfer rate: 1.5 Gb/s SATA, 3 Gb/s SAS. HP 8 Internal Port SAS HBA with RAID NOTE: Transfer rate 1.5 Gb/s SATA, 3Gb/s SAS. HP Smart Array E500/256MB Controller HP Smart Array P400/256MB Controller HP Smart Array P400/512MB BBWC Controller HP Smart Array P600/256 BBWC Controller HP Smart Array P800/512 BBWC Controller HP Smart Array P212/Zero Memory Controller HP Smart Array P212/ 256 MB Controller HP Smart Array P410/256 MB Controller HP Smart Array P410/512 MB BBWC Controller HP Smart Array P411/256 MB Controller HP Smart Array P411/512 MB BBWC Controller

SATA Hot Plug SFF (2.5-inch) Midline (MDL) Drives

	Quantity Supported	Position Supported	Controller
500GB 3G SATA 7.2K 160GB 3G SATA 7.2K	Up to 8	1-8	HP Smart Array E500/256MB Controller HP Smart Array P400/256MB Controller HP Smart Array P400/512MB BBWC Controller HP Smart Array P600/256 BBWC Controller HP Smart Array P800/512 BBWC Controller HP Smart Array P212/Zero Memory Controller HP Smart Array P212/ 256 MB Controller HP Smart Array P410/256 MB Controller HP Smart Array P410/512 MB BBWC Controller HP Smart Array P411/256 MB Controller HP Smart Array P411/512 MB BBWC Controller

SATA Hot Plug LFF (3.5-inch) Entry (ETY) Drives

	Quantity Supported	Position Supported	Controller
250GB 3G SATA 5.4K 120 GB 1.5G SATA 5.4K	Up to 8	1-8	HP SC44Ge Host Bus Adapter NOTE: When using the SC44Ge with SATA Hard Drives, 1.5G SATA Hard Drives are required. Transfer rate: 1.5 Gb/s SATA, 3 Gb/s SAS. HP 8 Internal Port SAS HBA with RAID

NOTE: When using the 8 Internal Port SAS HBA with SATA Hard Drives, 1.5G SATA Hard Drives are required.
NOTE: Transfer rate 1.5 Gb/s SATA, 3Gb/s SAS.
HP Smart Array E500/256MB Controller
HP Smart Array P400/256MB Controller
HP Smart Array P400/512MB BBWC Controller
HP Smart Array P600/256 BBWC Controller
HP Smart Array P800/512 BBWC Controller
HP Smart Array P212/Zero Memory Controller
HP Smart Array P212/ 256 MB Controller
HP Smart Array P410/256 MB Controller
HP Smart Array P410/512 MB BBWC Controller
HP Smart Array P411/256 MB Controller
HP Smart Array P411/512 MB BBWC Controller

SATA Hot Plug Midline (MDL) Solid State Drives

	Quantity Supported	Position Supported	Controller
60GB 3.0G SATA SSD 120GB 3.0G SATA SSD	Up to 8	1-8	HP Smart Array P212/Zero Memory Controller HP Smart Array P212/ 256 MB Controller HP Smart Array P410/256 MB Controller HP Smart Array P410/512 MB BBWC Controller HP Smart Array P411/256 MB Controller HP Smart Array P411/512 MB BBWC Controller

External Storage

	Quantity Supported	Position Supported	Host Controller or Adapter
50 Modular Smart Array	Up to 2	External	HP Smart Array P600/256 BBWC Controller
	Up to 4		HP Smart Array E500/256MB Controller HP Smart Array P800/512 BBWC Controller
60 Modular Smart Array	Up to 4	External	HP Smart Array E500/256MB Controller HP Smart Array P212/Zero Memory Controller HP Smart Array P212/ 256 MB Controller
	Up to 8		HP Smart Array P600/256 BBWC Controller HP Smart Array P800/512 BBWC Controller HP Smart Array P411/256 MB Controller HP Smart Array P411/512 MB BBWC Controller
70 Modular Smart Array	Up to 2	External	HP Smart Array P600/256 BBWC Controller HP Smart Array P212/Zero Memory Controller HP Smart Array P212/ 256 MB Controller
	Up to 4		HP Smart Array E500/256MB Controller HP Smart Array P800/512 BBWC Controller HP Smart Array P411/256 MB Controller HP Smart Array P411/512 MB BBWC Controller

Storage

Maximum Storage Capacity - (External Enclosures Attached)

Internal	4.0TB (8 x 500GB SFF SAS ENT drives)
External	1120 TB (56 MSA60 enclosures @ 20 drives per enclosure x 1 TB SATA/SAS MDL Drives)
Total	1122.4 TB

Tape and Disk Backup

NOTE: For the complete range of StorageWorks tape drives, autoloaders, libraries and media, including the internal fitting models, see: http://www.hp.com/go/tape. For the complete range of StorageWorks D2D Backup Systems see: http://www.hp.com/go/d2d. For the complete range of StorageWorks RDX drives and media see: http://www.hp.com/go/rdx. For hardware and software compatibility of HP StorageWorks disk and tape backup products see: http://www.hp.com/go/connect.

	Position Supported	Controller	Controller Part Number
HP StorageWorks SCSI Tape Drives LTO-1 Ultrium 232 LTO-2 Ultrium 448 LTO-3 Ultrium 920 LTO-3 Ultrium 960 LTO4 Ultrium 1760 LTO-4 Ultrium 1840 DAT 40 DAT 72 DAT 160 1U Rack-Mount Kit 3U Rack-Mount Kit	External	HP SC11Xe Ultra320 Single Channel/ PCIe x4 SCSI Host Bus Adapter NOTE: Please check the full compatibility information at: http://www.hp.com/go/connect	412911-B21
HP StorageWorks USB Tape Drives DAT 40 DAT 72 DAT 160 DAT 320 1U USB Rack-Mount Kit	External	USB 2.0 Port	N/A
HP StorageWorks SAS Tape Drives DAT 160 DAT 320 LTO-2 Ultrium 448 LTO-3 Ultrium 920 LTO-4 Ultrium 1760 LTO-4 Ultrium 1840 LTO-5 Ultrium 3000 LTO-5 Ultrium 3280 1U Rack-Mount Kit 3U Rack-Mount Kit	External	HP Modular Smart Array SC44Ge 1-ports Int/1-ports Ext PCIe x8 SAS Host Bus Adapter NOTE: Please check the full compatibility information at: http://www.hp.com/go/connect	416096-B21

Storage

HP StorageWorks SCSI Tape Autoloaders DAT 72x10 Autoloader 1/8 G2 Autoloader	External	HP SC11Xe Ultra320 Single Channel/ PCIe x4 SCSI Host Bus Adapter NOTE: Please check the full compatibility information at: http://www.hp.com/go/connect	412911-B21
HP StorageWorks SCSI Tape Libraries MSL2024 MSL4048 MSL8096 MSL6000	External	HP U320e SCSI Dual Channel Controller NOTE: Please check the full compatibility information at: http://www.hp.com/go/connect	AH627A
HP StorageWorks SAS Tape Autoloaders and Libraries 1/8 G2 Autoloader MSL2024 MSL4048 MSL8096	External	HP Modular Smart Array SC44Ge 1-ports Int/1-ports Ext PCIe x8 SAS Host Bus Adapter NOTE: Please check the full compatibility information at: http://www.hp.com/go/connect	416096-B21
HP StorageWorks Fibre Channel Tape Libraries MSL2024 MSL4048 MSL8096 MSL6000	External	Please consult the EBS connectivity matrix at: http://www.hp.com/go/ebs for connectivity information and the supported Fibre Channel HBAs shown in this QuickSpecs.	N/A
HP StorageWorks USB RDX Removable Disk Backup System RDX160 RDX320 RDX500 RDX750 RDX1TB	External	USB 2.0 Port	N/A
HP StorageWorks D2D Backup Systems, iSCSI D2D2500i D2D4000i	External	Embedded Network Controller. If the server requires a hardware iSCSI initiator, the QLogic QLA4050 Host Bus Adapter is recommended.	N/A
HP StorageWorks D2D Backup Systems, Fibre Channel D2D4000fc	External	Direct server attach is not supported, requires connection via SAN fabric. See: http://www.hp.com/go/connect	N/A

Power Specifications

Part number	348114-001
Operational Input Voltage Range (Vrms)	90 to 264
Frequency Range (Nominal) (Hz)	47 to 63 (50/60)

Nominal Input Voltage (Vrms)	**100**	**115**	**208**	**220**	**230**	**240**
Max Rated Output Wattage Rating	910	910	1300	1300	1300	1300
Nominal Input Current (A rms)	11.9	10.2	7.7	7.3	6.9	6.6
Max Rated Input Wattage Rating (Watts)	1163	1148	1566	1566	1548	1548
Max. Rated VA (Volt-Amp)	1186	1172	1598	1598	1579	1579
Efficiency (%)	80	81	83	83	84	84
Power Factor	0.98		0.98			
Leakage Current (mA)	0.43	0.50	0.90	0.96	1.00	1.04
Max. Inrush Current (A peak)	100	100	100	100	100	100
Max. Inrush Current duration (mS)	10					

NOTE: To review typical system power ratings use the HP Power Advisor which is available online located at url: www.hp.com/go/proliant-energy-efficient or www.hp.com/go/hppoweradvisor

- Click on: "ProLiant Servers"
- Click on the Server of interest. Example: DL585 G5
- Click on: "Power Calculator" link. (You may need to scroll down to see it)
- There are certain Dual-core, lowline, max configurations that are not supported. All highline configurations are supported. Consult the Power Calculator to determine if your lowline configuration is supported.

Standard Rack Model Power Cords / Jumper Cords	**Description**
Asia Pacific	IEC320-C14 to IEC320-C19 Jumper Cord
Europe	IEC320-C14 to IEC320-C19 Jumper Cord
Japan	JIS C8303 to IEC320-C19
	IEC320-C14 to IEC320-C19 Jumper Cord
PRC	IEC320-C14 to IEC320-C19 Jumper Cord
USA	IEC320-C14 to IEC320-C19 Jumper Cord

Power Specifications

Optional Country Power Cords and Jumper Cords	Description	Option Kit Part Number
Australia/New Zealand	Compaq 16A qty 25 Power Cord	305340-011
Denmark/Switzerland	Compaq 16A qty 25 Power Cord	305340-081
Europe	CEE 7 to IEC320-C19	305340-021
Italy	Compaq 16A qty 25 Power Cord	305340-061
South Africa/India	Compaq 16A qty 25 Power Cord	305340-AR1
UK	Compaq 16A qty 25 Power Cord	305340-031
US	Nema 5-15P to IEC320-C19	235603-001
US	Nema 6-20P to IEC320-C19	235604-001
WW	HP DL580G2 C19-C14 6ft Power Cord	313227-B21
WW	HP DL580G2/G3/G4 C19-C14 8ft Power Cord	291034-B21
WW	HP DL580G2 C19-C14 10ft Power Cord	310927-B21
WW	IEC320-C19 to IEC320-C14 Jumper (10A, IEC, 12ft/3.7m)	313228-B21
WW	IEC320-C19 to IEC320-C20 Jumper (16A, IEC, 8ft/2.5m)	295633-B22

System Unit	**Dimensions** (H x W x D) (with bezel)	6.94 x 19 x 26.5 in (17.6 x 48.3 x 67.3 cm)	
	Weight (approximate)	Maximum (all hard drives, power supplies, and processors installed)	95 lb (43 kg)
		Minimum (one hard drive, power supply, and processor installed)	79 lb (36 kg)
	Input Requirements (per power supply)	Rated Line Voltage	90 - 132 VAC, 180 - 264 VAC
		Rated Input Current	12 A (at 100 VAC), 8 A (at 200 VAC)
		Rated Input Frequency	47 to 63 Hz
		Rated Input Power	1161 W (at 100 VAC), 1598 W (at 200 VAC)
	BTU Rating	Maximum	3985 BTU/hr (at 100 VAC), 5457 BTU/hr (at 200 VAC)
	Power Specifications	NOTE: To review typical system power ratings use the HP Power Advisor which is available online located at url: www.hp.com/go/proliant-energy-efficient or www.hp.com/go/hppoweradvisor • Click on the system of interest. Example: DL585 G5 • Follow the instructions of the next screens	
	Power Supply Output (per power supply)	Rated Steady-State Power	910 W (at 100 VAC), 1300 W (at 200 VAC)
		Maximum Peak Power	960 W (at 100 VAC), 1420 W (at 200 VAC)
	System Inlet Temperature	Operating	10° to 35°C (50° to 95°F) at sea level with an altitude derating of 1.0°C per every 305 m (1.8°F per every 1000 ft) above sea level to a maximum of 3050 m (10,000 ft), no direct sustained sunlight. Maximum rate of change is 10°C/hr (18°F/hr). The upper limit may be limited by the type and number of options installed. System performance may be reduced if operating with a fan fault or above 30°C (86°F).
		Non-operating	-30° to 60°C (-22° to 140°F). Maximum rate of change is 20°C/hr (36°F/hr).
	Relative Humidity (non-condensing)	Operating	10 to 90% relative humidity (Rh), 28°C (82.4°F) maximum wet bulb temperature, non-condensing.
		Non-operating	5 to 95% relative humidity (Rh), 38.7°C (101.7°F) maximum wet bulb temperature, non-condensing.

	Altitude	Operating	3050 m (10,000 ft). This value may be limited by the type and number of options installed. Maximum allowable altitude change rate is 457 m/min (1500 ft/min).
		Non-operating	9144 m (30,000 ft). Maximum allowable altitude change rate is 457 m/min (1500 ft/min).
	Acoustic Noise	Listed are the declared A-Weighted sound power levels (LWAd) and declared average bystander position A-Weighted sound pressure levels (LpAm) when the product is operating in a 23°C ambient environment. Noise emissions were measured in accordance with ISO 7779 (ECMA 74) and declared in accordance with ISO 9296 (ECMA 109).	
		Idle	
		L WAd	7.7 B
		L pAm	58 dBA
		Operating	
		L WAd	7.7 B
		L pAm	58 dBA
	Emissions Classification (EMC)	FCC Rating	Class A
		Normative Standards	CISPR 22; EN55022; EN55024; FCC CFR 47, Pt 15; ICES-003; CNS13438; GB9254; K22;K24; EN 61000-3-2; EN 61000-3-3; EN 60950-1; IEC 60950-1
		NOTE: Product conformance to cited product specifications is based on sample (type) testing, evaluation, or assessment. This product or family of products is eligible to bear the appropriate compliance logos and statements.	
Slimline CD-RW/DVD-ROM 24X Combo Drive	Shipping Dimensions	13.88 x 11.38 x 9.25 in (35.26 x 28.91 x 23.50 cm)	
	Shipping Weight	5 lb (2.27 kg)	
	Disk	Applicable Disk	DVD-ROM DVD-R (Read Only) 2.6 GB/side DVD-RAM (Read Only) 5.2 GB/side DVD-RAM (Read Only) CD-ROM Mode-1 data disc CD-ROM Mode-2 data disc CD Audio disc CD-Extra CD-RW CD-R CD Text PhotoCD CD-I (mode 2) CD-I Ready CD-Bridge

	Capacity	DVD-ROM	DVD-SL	4.7 GB/side
			DVD-DL	8.5 GB/side
			Double Sided	9.40 GB/side
		DVD-R		3.95 GB/side
		DVD-RAM		2.6 GB/side and 5.2 GB/
		CD-ROM	Mode-1	650 MB (550 MB)
			Mode-2	742 MB (640 MB)
	Block Size	DVD		2,048 bytes
		CD		2,352 (Mode-0)
				2352, 2340, 2336, 2048 bytes (Mode-1)
				2352, 2340, 2336, 2048 bytes (Mode-2)
	Diameter	120 mm, 80 mm (with adapter at vertical mounting mode)		
Loading Mechanism	Tray type			
Interface	EIDE (ATAPI)			
Access Times (typical)	Random	DVD-ROM < 120 ms, CD-ROM < 110 ms		
	Full-Stroke	DVD-ROM < 240 ms, CD-ROM < 160 ms		
Audio Output Level (typical)	Line-out	CD 0.7 Vrms at 47 Kohms Load		
Data Transfer Rate (sustained)	DVD-ROM	Single Layer		10.8 MB/sec. Max.
	DVD-RAM	2.77 MB/sec. Max		
	CD-ROM	7.2 MB/sec. Max.		
Cache Buffer	2 MB			
Spin-up Time (typical)	less than 10 seconds			
MTBF	120,000 Power On Hours (POH)			
Ambient Temperature	Operating	-22° to 140° F (-30° to 60° C)		
Relative Humidity	Operating	10% to 80%		
	Storage/Transportation	5% to 95%		
Dimensions	(HxWxD, maximum)	0.5 x 5.04 x 5.1 in (12.7 x 128 x 129.4 mm)		
Option Kit Contents	DVD-ROM drive with installation guide, warranty card, registration card			

Integrated Lights-Out 2 Standard (integrated on system board)	**Architecture**	32-bit PCI-based health and remote management ASIC (Application Specific Integrated Circuit)
	Processor	32-bit RISC processor core running at 66 MHz
	Upgradeability	Option firmware upgradeable via flash ROM

Video Support	Utilizes the host server's embedded video chip. Supports VGA/SVGA, 640 x 480 (256 to 16.7M colors), 800 x 600 (256 to 16.7M colors), 1024 x 768 (256 to 65K colors), 1280 x 1024 (256 colors)
Interfaces	One Ethernet network connection (10/100 Mb/s)
Memory	2-MB Flash ROM 8-MB SDRAM
Operating System and Virtualization Software Support	Microsoft Windows Server Windows Server 2008 Hyper-V Red Hat Enterprise Linux (RHEL) SUSE Linux Enterprise Server (SLES) Oracle Enterprise Linux (OEL) Solaris 10 for x86/x64 based systems VMware XenSource NOTE: For more information on HP's Certified and Support Operating System & Virtualization Software, visit our Support Matrix at: www.hp.com/go/ossupport For our driver download page www.hp.com/support/DL585G5
Client Browser Support	Microsoft Internet Explorer 7 Microsoft Internet Explorer 6 Firefox 3.5 (on supported Windows and Linux systems) Firefox 3.0 (on supported Windows and Linux systems)
iLO 2 Standard Features	Virtual Text Remote Console Virtual KVM Virtual Power Button Control Virtual UID Control Power Regulator Control Dedicated LAN Connectivity Secure access using web browser Secure access using Secure Shell (SSH) client Serial connectivity Automatic IP Configuration via DHCP/DNS/WINS Industry Standard 128-bit Secure Sockets Layer (SSL) Security IML and iLO2 Event Logging Support for up to 12 user accounts with customizable access privileges
iLO Advanced Features (optional)	Virtual Graphical Remote Console Virtual Floppy/USB Key drive Virtual CD-ROM drive Directory Services Integration Processor States Reporting Terminal Services Integration

NOTE: For more information on how to purchase the HP iLO Advanced optional licensed features, visit the iLO QuickSpecs located: www.hp.com/go/iLO

Smart Array P400 Controller	Disk Drive and Enclosure Interface	3G SAS (Serial Attached SCSI) 1.5G SATA (Serial Advanced Technology Attachment)	
	SAS Connectors	2 internal (SFF8484) x4 wide port connectors	
	Cache Memory Speed	DDR2-533MHz with 40 or 72-bit wide bus provides up to 4.2 GB/s maximum bandwidth.	
	Server Interface	x8 2.5G PCIe provides 2GB/s maximum bandwidth.	
	SAS Speed	x8 3G SAS provides 2.4GB/s maximum bandwidth.	
	Cache Memory	40-bit 256MB cache (72-bit 512MB module upgrades available); ECC protection, battery-backed, and transportable	
	Logical Drives Supported	Up to 32 logical drives	
	Maximum Logical Drive Capacity	2TB	
	Host Memory Addressing	64-bit, supporting greater than 4GB server memory space	
	RAID Support	RAID 6 with ADG (Advanced Data Guarding) requires Battery Backed Write Cache Upgrade RAID 5 (Distributed Data Guarding) RAID 1, 1+0 (Striping & Mirroring) RAID 0 (Striping)	
	Upgradeable Firmware	Upgradeable Firmware with recovery ROM feature	
Two embedded NC371i Multifunction Gigabit Server Adapters	Network Interface	10/100/1000-T	
	Compatibility	IEEE 802.3 10Base-T IEEE 802.3ab 1000Base-T IEEE 802.3u 100Base-TX	
	Data Transfer Method	PCI Express, four lanes (x4)	
	Controller	BCM5706	
	Network Transfer Rate	10Base-T (Half-Duplex)	10 Mb/s
		10Base-T (Full-Duplex)	20 Mb/s
		100Base-TX (Half-Duplex)	100 Mb/s
		100Base-TX (Full-Duplex)	200 Mb/s
		1000Base-TX (Half and Full-Duplex)	2000 Mb/s
	Connector	RJ-45	
	Cable Support	10Base-T	Categories 3, 4, or 5 UTP; up to 328 ft (100 m)
		10/100/1000 Base-TX	Category 5 UTP up to 328 ft (100 m)

Environment-friendly Products and Approach	End-of-life Management and Recycling	Hewlett-Packard offers end-of-life HP product return, trade-in, and recycling programs in many geographic areas. For trade-in information, please go to: http://www.hp.com/go/green. To recycle your product, please go to: http://www.hp.com/go/green or contact your nearest HP sales office. Products returned to HP will be recycled, recovered or disposed of in a responsible manner. The EU WEEE directive (2002/95/EC) requires manufacturers to provide treatment information for each product type for use by treatment facilities. This information (product disassembly instructions) is posted on the Hewlett Packard web site at: http://www.hp.com/go/green. These instructions may be used by recyclers and other WEEE treatment facilities as well as HP OEM customers who integrate and re-sell HP equipment.

© Copyright 2010 Hewlett-Packard Development Company, L.P.

The information contained herein is subject to change without notice.

Microsoft and Windows are US registered trademarks of Microsoft Corporation.

AMD, the AMD Arrow logo, AMD Opteron™, and combinations thereof, are trademarks of Advanced Micro Devices, Inc.

Unix is a registered trademark of The Open Group.

The only warranties for HP products and services are set forth in the express warranty statements accompanying such products and services. Nothing herein should be construed as constituting an additional warranty. HP shall not be liable for technical or editorial errors or omissions contained herein.

For hard drives, 1GB = 1 billion bytes. Actual formatted capacity is less.