Overview

Powered by Latest AMD Opteron® Six-Core Processors DL585 G6 is positioned as the leading performance 4P multi-core rack mount server with the expansion capabilities to make it ideal for server virtualization, server consolidation, multi-tiered enterprise application, and corporate infrastructure applications.

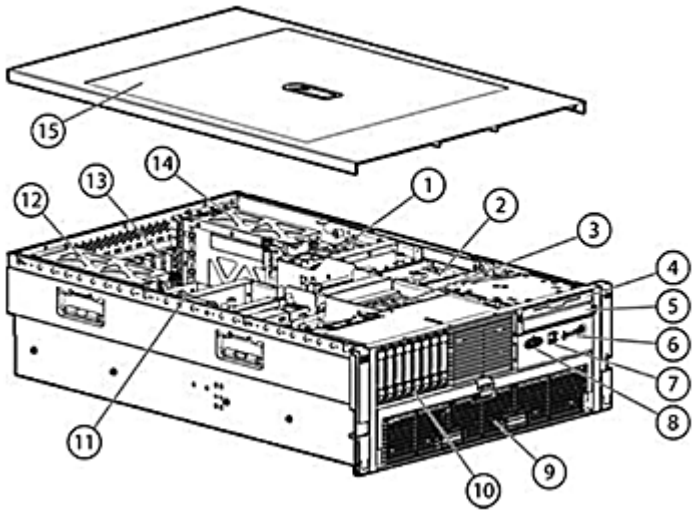

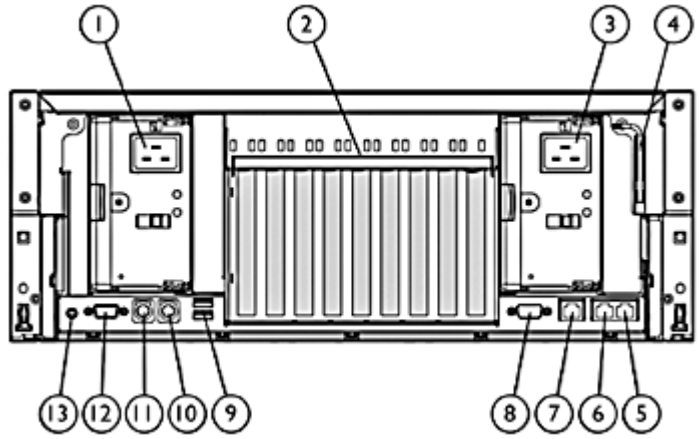

Front View:

1. Hot Plug Redundant Fans (standard)
2. System Insight Display
3. Hot Plug Redundant Fans (standard)
4. 1.44 MB Diskette Drive bay
5. DVD/CD-RW drive (standard)
6. Front Panel LED Display (internal and external health, Unit ID light) and Power Button
7. Two USB ports
8. One video port
9. Front accessible processor / memory cage
10. Eight bay Small Form Factor (SFF) Serial Attached SCSI (SAS) drive cage
11. 4U (7" Height) Rack Form Factor
12. Hot Plug Redundant Power Supply
13. Nine PCI I/O Slots (2 64-bit/100MHz PCI-X, 4 PCI-Express x4, 3 PCI-Express x8)
14. Hot Plug Redundant Power Supply
15. Removable Top Access Panel

Rear View:

1. Redundant hot-plug power supply (optional)
2. PCI Express and PCI-X non-hot-plug expansion slots
3. Hot-plug power supply (primary)
4. T-15 Torx screwdriver
5. NIC connector 2
6. NIC connector 1
7. Integrated Lights-Out 2 (iLO 2) connector
8. Serial connector
9. USB connectors (two)
10. Mouse connector
11. Keyboard connector
12. Video connector
13. Rear UID button and LED

Standard Features

NOTE: For the Standard Features shipped in the "Factory Integrated Models", please see the "Configuration Information - Factory Integrated Models" section.

Processor Two or four of the following depending on model	**Six-Core Processors** AMD Opteron™ processor Model 8439SE (2.8 GHz,105W ACP) AMD Opteron™ processor Model 8425HE (2.1 GHz, 55W ACP) AMD Opteron™ processor Model 8435 (2.6 GHz,75W ACP) AMD Opteron™ processor Model 8431 (2.4 GHz, 75W ACP) NOTE: Processor wattage references reflect Average CPU Power (ACP). For more information on ACP visit: http://www.amd.com/powernow.	
Cache Memory	6 MB Level 3 cache memory	
Chipset	NVIDIA NForce Professional 2200 and 2050 chipsets, and AMD-8132 chipset	
Upgradeability	Upgradeable to quad (4) processors	
Memory Protection	Advanced ECC capabilities	
Memory	Type	32 slots of REG PC2-6400 DIMMs (DDR2-800)
	Standard	16 GB (8 x 2 GB)
	Maximum	256 GB (32 x 8 GB)
Network Controller	Two embedded NC371i Multifunction Gigabit Network Adapters with TCP/IP Offload Engine, including support for Accelerated iSCSI through an optional Licensing Kit	

Standard Features

Expansion Slots

NOTE: 9 total slots: (3) x8 PCI-Express; (4) x4 PCI-Express; (2) PCI-X (100MHz). One slot populated with the HP Smart Array P410 Controller

Expansion Slots #	Technology	Bus Width	Connector Width	Bus Number	Device No.	Form Factor	Notes
1	PCI-X	64-bit	N/A	66	1	Full height or half length	
2	PCI-X	64-bit	N/A	66	2	Full length, full height	
3	PCI-Express	x4	x8	73	0	Full length, full height	100MHz
4	PCI-Express	x4	x8	76	0	Full length, full height	100MHz
5	PCI-Express	x8	x16	70	0	Full length, full height	
6	PCI-Express	x4	x8	79	0	Full length, full height	100MHz
7	PCI-Express	x8	x16	2	0	Full length, full height	100MHz
8	PCI-Express	x8	x16	5	0	Full length, full height	Reserved slot for Smart Array P410 Controller
9	PCI-Express	x4	x8	8	0	Full height or half length	

Storage Controller

HP Smart Array P410/512 MB BBWC Controller (RAID 0/1/1+0/5/5+0)

Available upgrades: 256MB, 512MB with BBWC, 512MB with FBWC, 1G with FBWC, Battery kit upgrade (for the 256MB cache), and Smart Array Advanced Pack (SAAP)

The Battery-Backed Write Cache (BBWC) Enabler for the Smart Array P410 Controller protects up to 512-MB write cache memory from hard boot, power, controller, or system board failures.

- Standard on most HP ProLiant DL585 G6 models
- Battery charge/life: Up to 48 hours/3 years
- Transportable data protection
- Increases overall controller performance

NOTE: Safely transport your write cache data to another HP ProLiant DL585 G6 in the data center by removing the BBWC and Smart Array P410 Controller Memory Module simultaneously.

Standard Features

Internal Storage Devices	Diskette Drive	1.44MB Diskette Drive bay available	
	Optical Drive	Slimline DVD/CD-RW Drive Standard on some models - ejectable for security and serviceability	
	Hard Drives	None standard	
	Hard Disk Drive Backplane	Internal SAS backplane supports up to eight SFF hard disk drives	
Maximum Internal Storage	Hot Plug SFF SAS	8.0 TB	8 x 1TB SFF SAS (internal hot plug)
	Hot Plug SFF SATA	8.0 TB	8 x 1TB SFF SATA (internal hot plug)
Interfaces	Serial	1	
	Video	1 front, 1 rear	
	Network RJ-45 (Ethernet)	2	
	iLO 2 Remote Management port	1	
	Keyboard	1	
	Pointing Device (Mouse)	1	
	USB 2.0 Ports	2 front, 2 rear, 1 internal NOTE: Please see the following URL for additional information regarding USB support: http://h18004.www1.hp.com/products/servers/platforms/usb-support.html	

Industry Standard Compliance

ACPI 1.0a. Compliant
PCI 2.2 Compliant
PXE Support
WOL Support (with embedded NC371i Multifunction Gigabit Network Adapters)
Physical Address Extension (PAE) Support
Microsoft® Logo certifications
USB 2.0 Support

Server Power Cords

The HP ProLiant DL585 G6 servers ship standard worldwide with a 6-foot IEC 320-C14 to IEC320-C19 jumper cord. Japanese models also include a 3.6 meter lowline (100V) power cord. If you require a local power cord, please check the Power Specifications below for the appropriate country-specific power cord, or consult the Power Cord Matrix: http://www.hp.com/products/powercords

Power Supply

910W (low line), 1300W (high line) with 12V main output. Size is 2.8"(H) X 4.9"(W) X 7.5"(L).
NOTE: One Hot Plug Power Supply ships with Standard Models (optional Redundant Hot Plug Power Supply Option Kit available). High Performance models ship with two Hot Plug Power Supplies.

System Fans

6 Hot plug, redundant fans (individually removable)

Standard Features

Operating Systems and Virtualization Software Support for ProLiant Servers	Microsoft Windows Server Microsoft Windows Server Hyper-V Red Hat Enterprise Linux (RHEL) SUSE Linux Enterprise Server (SLES) Solaris VMware HP Citrix Essentials for XenServer NOTE: For more information on HP's Certified and Supported ProLiant Servers for OS and Virtualization Software and latest listing of software drivers available for your server, please visit our Support Matrix at: www.hp.com/go/ossupport and our driver download site www.hp.com/support/DL585G6	
Graphics	Integrated ATI RN-50 1600x1280x64K 16M color (32 MB DDR1 memory)	
Form Factor	Rack (4U = 7 inches), ships with sliding rails and cable management system Space saving form factor (4U) provides space efficiencies while providing maximum deployment flexibility	
HP Insight management software	HP Insight Foundation	Managing the growing number of servers can be complex and expensive for your organization. IT managers need to address changing business needs with tools that meet the challenges of managing today's complex Datacenters. HP provides management solutions that are designed to simplify a server's installation, configuration and maintenance throughout the entire server lifecyle. This provides the customer with higher levels of operational efficiency and highly reliable systems: http://www.hp.com/go/foundation. The foundation pack includes: • HP SmartStart • HP Management DVD • HP ProLiant Smart Update Firmware DVD NOTE: In an effort to support reducing our environmental impact, the HP Insight Foundation Suite for ProLiant media will be available as a selectable option for this server at time of order of a CTO SKU. This will allow customers to order the number of media kits that best meet their needs and eliminate receiving unnecessary duplicate media.
	HP Integrated Lights-Out (iLO) integrated on system board	HP Integrated Lights-Out (iLO) simplifies server setup, health monitoring, power and thermal control, and lights-out remote administration of ProLiant ML, DL, and BL servers. HP iLO functions without additional software and can be accessed from any location via a web browser. HP iLO works hand-in-hand with HP Systems Insight Manager, Insight Control suites, and Insight Dynamics for ProLiant, helping customers unleash the value of the ProLiant platform and deliver the highest possible quality of IT service. For more information, visit: www.hp.com/go/iLO

Standard Features

Intelligent Manageability	HP Systems Insight Manager software SmartStart Redundant ROM Remote Flash ROM Management Agents Integrated Management Log (IML) Automatic Server Recovery-2 (ASR-2) ROM-Based Setup Utility (RBSU) Dynamic Sector Repairing (with Smart Array Controllers) Drive Parameter Tracking (with Smart Array Controllers) Pre-Failure Warranty (covers processors, SAS hard drives and memory) Redundant/adaptive load balancing NIC Support
Security	Power-on password Keyboard password Diskette drive control enable/disable Diskette boot control enable/disable External USB port enable/disable Network Server Mode Serial interface control Administrator's password Removable optical drive
Warranty	This product is covered by a global limited warranty and supported by HP Services and a worldwide network of HP Authorized Channel Partners resellers. Hardware diagnostic support and repair is available for three years from date of purchase. Support for software and initial setup is available for 90 days from date of purchase. Enhancements to warranty services are available through HP Care Pack services or customized service agreements. Hard drives have either a one year or three year warranty; refer to the specific hard drive QuickSpecs for details. NOTE: Server Warranty includes 3-Year Parts, 3-Year Labor, 3-Year Onsite support with next business day response. Warranty repairs may be accomplished through the use of Customer Self Repair (CSR) parts. These parts fall into two categories: 1) Mandatory CSR parts are designed for easy replacement. A travel and labor charge will result when customers decline to replace a Mandatory CSR part; 2) Optional CSR parts are also designed for easy replacement but may involve added complexity. Customers may choose to have HP replace Optional CSR parts at no charge. Additional information regarding worldwide limited warranty and technical support is available at: http://h18004.www1.hp.com/products/servers/platforms/warranty/index.html.

Optional Features

HP Insight management software	HP Insight Control	HP Insight Control, a product option, delivers essential infrastructure management that can help save time and money by making it easy to deploy, migrate, monitor, remote control, and optimize your IT infrastructure through a single, simple management console. Two versions of Insight Control are available, to serve environments requiring either a Linux-based or a Windows-based central management server: HP Insight Control for Linux, and HP Insight Control. See www.hp.com/go/insightcontrol HP Insight Control includes one year of 24 x 7 HP Software Technical Support and Update Service ensuring rapid access to HP support staff and proactive delivery of software updates. For more information about this service, please visit: http://www.hp.com/services/insight.
	HP Insight Dynamics for ProLiant	HP Insight Dynamics for ProLiant, a product option, is an integrated command center that enables IT Staff personnel to continuously analyze and optimize a converged infrastructure, while automating and reducing the cost of common data center tasks by as much as 40 percent. As a powerfully integrated by design toolkit to accelerate complex technology projects and simplify daily operations that ultimately enable IT Staff personnel to dynamically keep pace with the organizations changing business requirements. It enables them to plan capacity and power continuously, balance across physical and virtual resources, and ensure cost-effective high availability. It also enables IT organizations to provision infrastructure consistently and automatically from pools of shared resources using a self-service portal. Resources provisioned can range from a single virtual machine to complex multi-tier environments and their associated physical and virtual resource requirements. In addition to the previous functional benefits, it also provides a cost-effective disaster recovery for physical and virtual environments that works with HP StorageWorks Continuous Access software for both the Enterprise Virtual Array and the XP storage array allowing application environments to be reactivated in minutes with the touch of a button to a remote location. NOTE: For more information, visit: http://www.hp.com/go/insightdynamics

Optional Features

High Performance Clusters	HP Cluster Platforms	HP Cluster Platforms are specifically engineered, factory-integrated large-scale ProLiant clusters optimized for High Performance Computing, with a choice of servers, networks and software. Operating system options include specially priced offerings for Red Hat Enterprise Linux and Novell SLES, as well as Microsoft Windows HPC Server. A Cluster Platform Configurator simplifies ordering. http://www.hp.com/go/clusters
	HP HPC Interconnects	High Performance Computing (HPC) interconnect technologies are available for this server as part of the HP Cluster Platform portfolio. These high-speed InfiniBand and Gigabit interconnects are fully supported by HP when integrated within an HP cluster. Flexible, validated solutions can be defined with the help of configuration tools. http://www.hp.com/techservers/clusters/ucp/index.html
	HP Cluster Management Utility	HP Cluster Management Utility (CMU) is an HP-licensed and HP-supported suite of tools that are used to manage large-scale Linux ProLiant systems. CMU includes software for the centralized provisioning, management and monitoring of nodes. CMU makes the administration of clusters user friendly, efficient, and effective. http://www.hp.com/go/cmu
	HP HPC Linux Value Pack	HP HPC Linux Value Pack (Value Pack) is an HP-licensed and HP-supported specially priced software bundle for the development and deployment of applications on HPC Cluster Platforms. Value Pack includes the Platform HPC Enterprise Edition suite of tools including the LSF workload scheduler, the HP-MPI parallelization library. Also included are the HP Unified Parallel C compiler and the HP Shmem library, as well as the execution environments for the libraries and compiler. HP HPC Linux Value Pack

Solutions

Designed for enterprise customers running compute- or I/O intensive database and transaction applications, as well as data centers using virtualization and consolidation to reduce server sprawl, the rack optimized 4-processor HP ProLiant DL585 G6 server delivers maximum performance and high availability for highly complex, business critical applications. Specifically, the HP ProLiant DL585 G6 would be excellent for running the following types of applications:

Typical Usage:

- x86 virtualization and consolidation projects
- Electronic Design Automation (EDA)/Semiconductor
- Financial
- Large database applications
- ERP / CRM
- Petrochemical
- Life Science and Material Science
- Video Rendering

Optional Features

Factory Express Portfolio for Servers and Storage

HP Factory Express offers configuration, customization, integration and deployment services for HP servers and storage products. Customers can choose how their factory solutions are built, tested, integrated, shipped and deployed.

Factory Express offers service packages for simple configuration, racking, installation, complex configuration and design services as well as individual factory services, such as image loading, asset tagging, and custom packaging. HP products supported through Factory Express include a wide array of servers and storage: HP Integrity, HP ProLiant, HP ProLiant Server Blades, HP BladeSystem, HP 9000 servers as well as the MSAxxxx, VA7xxx, EVA, XP, rackable tape libraries and configurable network switches.

For more information on Factory Express services for your specific server model, please contact your sales representative or go to: http://www.hp.com/go/factory-express.

HP Enterprise Configurator

The HP eConfigure Enterprise Configurator now provides factory default racking for our HP hardware portfolio. This approach is aligned with our strategic direction to meet the needs and expectations of our valued customers. If you require "custom" rack configuration, please contact HP's Customer Business Center or an Authorized Partner for assistance. For additional information please visit: http://www.hp.com/products/configurator

Service and Support	**HP Technology Services for Industry Standard Servers and BladeSystem** Capitalizing on HP ProLiant server and HP BladeSystem capabilities requires a service partner who understands your increasingly complex business technology environment. That's why it makes sense to team up with the people who know HP infrastructure hardware and software best - the experienced professionals at HP Services. **What HP ProLiant and BladeSystem Services can do for you** HP ProLiant and BladeSystem Services can help you design, deploy, test, integrate, support, and manage IT and infrastructure solutions. This way, HP proposes services solutions that include more than just uplift of base warranty. You can get the support you need by choosing from one of a number of service packaged solutions we have designed to address wider set of customer support needs:. HP Technology Services meets business challenges with services offered in three packages - **Optimized Care Package, Standard Care Package, and Basic Care Package** - available for each product group. Such packaged solutions enable customers to optimize technology operations, minimize risk and drive better business outcomes with easy-to-buy, easy-to-use scalable support packages for servers, storage, networking and software.
Optimized Care	**Optimized Care Package: Supports maintaining servers at optimum performance availability** **HP ProLiant Server Hardware Installation** Provides for the basic hardware installation of HP branded servers, storage devices and networking options to assist you in bringing your new hardware into operation in a timely and professional manner http://h20195.www2.hp.com/V2/GetPDF.aspx/5981-9356EN **HP Installation and Startup for Insight Control Software** Provides for the deployment and basic configuration of HP Insight Control on HP ProLiant ML and DL series servers or HP BladeSystem servers http://h20195.www2.hp.com/v2/GetPDF.aspx/4AA0-9972ENW.pdf **3-Year HP Critical Advantage** Provides end-to-end infrastructure support solution for business critical applications running on virtualized/x86 infrastructures, enabling the customers to cost effectively build, operate, and continuously improve their IT environment http://h20195.www2.hp.com/V2/GetDocument.aspx?docname=4AA3-1772ENW **Additional Services**: Microsoft or Linux or VMware education courses + Facility & technology environmental assessment services + Energy Efficiency Design, Factory Express

Service and Support

Standard Care	Standard Care Package: Package that maintains high level of server availability HP ProLiant Server Hardware Installation Provides for the basic hardware installation of HP branded servers, storage devices and networking options to assist you in bringing your new hardware into operation in a timely and professional manner http://h20195.www2.hp.com/V2/GetPDF.aspx/5981-9356EN HP Installation and Startup for Insight Control Software Provides for the deployment and basic configuration of HP Insight Control on HP ProLiant ML and DL series servers or HP BladeSystem servers http://h20195.www2.hp.com/v2/GetPDF.aspx/4AA0-9972ENW.pdf 3-Year HP 6 hour Hardware Support Onsite Call-to-Repair Service Provides an IT manager with a team of support specialists who will quickly begin troubleshooting the system to help return the hardware to operating condition within 6 hours of the initial service request to the HP Global Solution Center http://h20195.www2.hp.com/V2/GetPDF.aspx/5981-6636ENN 3-Year , HP 24x7 Software Support for Insight Control Provides for the deployment and basic configuration of HP Insight Control on HP ProLiant ML and DL series servers or HP BladeSystem servers http://h20195.www2.hp.com/V2/GetPDF.aspx/5981-6645EEE.pdf Additional Services: Software OS (Microsoft, Linux (SUSE/Red Hat) & VMware Installation & Start Up, and Software Support; Install and Startup Services for Insight Control; Microsoft or Linux or VMware education courses; +30 Proactive Select Credits, Factory Express
Basic Care	Basic Care Package: delivers minimum recommended support service level HP ProLiant Server Hardware Installation Provides for the basic hardware installation of HP branded servers, storage devices and networking options to assist you in bringing your new hardware into operation in a timely and professional manner http://h20195.www2.hp.com/V2/GetPDF.aspx/5981-9356EN HP Installation and Startup for Insight Control Software Provides for the deployment and basic configuration of HP Insight Control on HP ProLiant ML and DL series servers or HP BladeSystem servers http://h20195.www2.hp.com/v2/GetPDF.aspx/4AA0-9972ENW.pdf 3-Year HP 24x7 4 hour Response, Hardware Support Onsite Service Provides for the deployment and basic configuration of HP Insight Control on HP ProLiant ML and DL series servers or HP BladeSystem servers http://h20195.www2.hp.com/v2/GetPDF.aspx/4AA0-9972ENW.pdf 3-Year , HP 24x7 Software Support for Insight Control Provides for the deployment and basic configuration of HP Insight Control on HP ProLiant ML and DL series servers or HP BladeSystem servers http://h20195.www2.hp.com/V2/GetPDF.aspx/5981-6645EEE.pdf Additional Services: Software OS (Microsoft, Linux (SUSE/Red Hat) & VMware Installation & Start Up

	and Software Support); +10 Proactive Select Credits, Factory Express
Insight Remote Support	The packages include HP Insight Remote Support that uses proven technology to deliver secure, reliable 24x7 remote monitoring, diagnoses, and problem resolution. It is available at no additional cost to all warranty, HP Care Pack Service, and service agreement customers.
For more information	To learn more on HP ProLiant servers and HP BladeSystem servers, please contact your HP sales representative or HP Authorized Channel Partner. Or visit: http://www.hp.com/services/proliant

Pre-configured Models

NOTE: For the Standard Features shipped in the "Factory Integrated Models", please see the "Configuration Information - Factory Integrated Models" section.
NOTE: Pre-configured models ship with the configurations below. Options can be selected from the Core or Additional options section of this QuickSpecs.
NOTE: HP does not allow factory integration of options into pre-configured models. Any additional options purchased will be shipped separately.
NOTE: If you desire a custom configuration please see "Configuration Information - Factory Integrated Models" section of this QuickSpecs.
NOTE: Not all models are available in all regions. Check with your local country HP offices for availability.

Performance Models

HP ProLiant DL585 G6 8439SE 2.8GHz Six Core 4P 16GB 512BBWC Rack Server 539842-xx1	Processors	AMD Opteron™ 8439SE processor Model (2.8 GHz, 105W ACP)
	Cache Memory	6MB shared L3 cache per processor
	Memory	16GB (8 x 2GB)
	Network Controller	Two embedded NC371i Multifunction Gigabit Network Adapters
	Storage Controller	Smart Array P410/512 MB BBWC Controller (Raid 0,1,1+0, 5, 5+0)
	Hard Drives	None ship standard
	Internal Storage	Up to 8TB of internal storage
	Optical Drive	Slimline DVD/CD-RW Drive (8X/24X) (ejectable)
	Power Supply	Redundant standard on performance models
	Fans	6 Hot plug, redundant fans (individually removable)
	Form Factor	Rack 4U
	Warranty	Server Warranty includes 3-Year Parts, 3-Year Labor, 3-Year Onsite support with next business day response.

HP ProLiant DL585 G6 8439SE 2.8GHz Six Core 4P 16GB 512BBWC ICE Rack Server 577143-xx1	Processors	AMD Opteron™ 8439SE processor Model (2.8 GHz, 105W ACP)
	Cache Memory	6MB shared L3 cache per processor
	Memory	16GB (8 x 2GB)
	Network Controller	Two embedded NC371i Multifunction Gigabit Network Adapters
	Storage Controller	Smart Array P410/512 MB BBWC Controller (Raid 0,1,1+0, 5, 5+0)
	Hard Drives	None ship standard
	Internal Storage	Up to 8TB of internal storage
	Optical Drive	Slimline DVD/CD-RW Drive (8X/24X) (ejectable)
	Power Supply	Redundant standard on performance models
	Fans	6 Hot plug, redundant fans (individually removable)
	Insight Control	HP Insight Control Environment No Media single server license, including 1 year of 24x7 Technical Support and Updates
	Form Factor	Rack 4U
	Warranty	Server Warranty includes 3-Year Parts, 3-Year Labor, 3-Year Onsite support with next business day response.

Pre-configured Models

HP ProLiant DL585 G6 8431 2.4GHz Six Core 4P 16GB 512BBWC Rack Server 539843-xx1	Processors	AMD Opteron™ processor Model 8431 (2.4 GHz, 75W ACP)
	Cache Memory	6MB shared L3 cache per processor
	Memory	16GB (8 x 2GB)
	Network Controller	Two embedded NC371i Multifunction Gigabit Network Adapters
	Storage Controller	Smart Array P410/512 MB BBWC Controller (Raid 0,1,1+0, 5, 5+0)
	Hard Drives	None ship standard
	Internal Storage	Up to 8TB of internal storage
	Optical Drive	Slimline DVD/CD-RW Drive (8X/24X) (ejectable)
	Power Supply	Redundant standard on performance models
	Fans	6 Hot plug, redundant fans (individually removable)
	Form Factor	Rack 4U
	Warranty	Server Warranty includes 3-Year Parts, 3-Year Labor, 3-Year Onsite support with next business day response.

Country Code Key	xx=00	US
	xx=20	Brazil
	xx=29	Japan
	xx=37	A/P
	xx=42	Europe
	xx=AA	PRC

NOTE: This section lists some of the steps required to configure a Factory Integrated Model. To ensure only valid configurations are ordered, HP recommends the use of an HP approved configurator. Contact your local sales representative for information on configurable product offerings and requirements.
NOTE: Configure-to-order (CTO) servers must start with a CTO Chassis.
NOTE: FIO indicates that this option is only available as a factory installable option.

Step 1: Base Configuration

HP Models	HP ProLiant DL585 G6 Configure-to-order Rack Server	574409-B21
	Factory Integrated Models ship with:	
	Two embedded NC371i Multifunction Gigabit Network Adapters Integrated Lights-Out 2 (iLO 2) Standard management Six (6) Redundant Hot Plug Fans One Hot Plug Power Supply Rack 4U Form Factor	

Step 2: Choose Required Options (only one of the following from each list unless otherwise noted)

HP Processors	**Six-Core Processors**	
	AMD Opteron™ 8431 2.40GHz Six Core 75 Watts DL585 G6 Factory Integrated Processor Option Kit	539848-L21
	HP DL585 G6 AMD Opteron™ 8435 (2.60GHz/6-core/6MB/75W) FIO Processor Option Kit	572373-L21
	AMD Opteron™ 8439SE 2.80GHz Six Core 105 Watts DL585 G6 Factory Integrated Processor Option Kit	539847-L21
	AMD Opteron™ 8425HE 2.10GHz Six Core 55 Watts DL585 G6 Factory Integrated Processor Option Kit	539849-L21
HP Memory	HP 2GB (2x1GB) Single Rank PC2-6400 (DDR2-800) Registered Memory Kit	497763-B21
	HP 4GB (2x2GB) Single Rank PC2-6400 (DDR2-800) Registered Memory Kit	497765-B21
	HP 8GB (2x4GB) Dual Rank PC2-6400 (DDR2-800) Registered Memory Kit	497767-B21
	HP 16GB (2x8GB) Dual Rank PC2-5300 (DDR2-667) Registered Memory Kit	408855-B21
	HP 64GB (8x8GB) Dual Rank PC2-5300 (DDR2-667) Registered Memory Kit	495605-B21
	NOTE: Memory must be installed in like-pairs, i.e. two of the same size. NOTE: Memory bus speeds will operate as follows: 2-4 DIMMs at 800MHz; 6 at 667MHz; 8 at 533MHz.	
HP Storage Controllers	HP Smart Array P410/256 2-ports Int PCIe x8 SAS Controller	462862-B21
	HP Smart Array P410/512 BBWC 2-ports Int PCIe x8 SAS Controller	462864-B21
	HP Smart Array P410/ZM 2-ports Int PCIe x8 FIO SAS Controller	462860-B21
	HP Smart Array P410/256 2-ports Int PCIe x8 FIO SAS Controller	491195-B21

HP Optical Drives	NOTE: Optical drives are ejectable.	
	HP Slimline CD-RW/DVD-ROM 24X Carbon Combo Drive	331903-B21
	HP 8X/24X SlimLine DVD-ROM Drive	264007-B21
	HP 8X Slim DVD+RW Drive	383975-B21

Step 3: Choose Additional Factory Integratable Options (only one of the following from each list unless otherwise noted)

HP Insight Software	HP Insight Control including 1yr 24x7 Support ProLiant ML/DL/BL-bundle Single Server FIO License	582765-B21
	HP Insight Control for Linux including 1yr 24x7 Support ML/DL Bundle 1 Server FIO License	TC203A

Step 4: Choose Additional Options for Factory Integration

NOTE: For additional options, please refer to the "Core Options" and "Additional Options" section below.

Core Options

NOTE: Some options may not be integrated at the factory. To ensure only valid configurations are ordered, HP recommends the use of an HP approved configurator. Contact your local sales representative for additional information.

HP Processors	Six-Core Processors	
	HP DL585 G5/G6 AMD Opteron™ 8431 (2.40GHz/6-core/6MB/75W) 2-Processor Kit	539848-B21
	HP DL585 G5/G6 AMD Opteron™ 8435 (2.60GHz/6-core/6MB/75W) 2-Processor Kit	572373-B21
	HP DL585 G5/G6 AMD Opteron™ 8425HE (2.10GHz/6-core/6MB/55W) 2-Processor Kit	539849-B21
	HP DL585 G5/G6 AMD Opteron™ 8439SE (2.80GHz/6-core/6MB/105W) 2-Processor Kit	539847-B21
HP Memory	Registered DIMMs	
	HP 2GB (2x1GB) Single Rank PC2-6400 (DDR2-800) Registered Memory Kit	497763-B21
	HP 4GB (2x2GB) Single Rank PC2-6400 (DDR2-800) Registered Memory Kit	497765-B21
	HP 8GB (2x4GB) Dual Rank PC2-6400 (DDR2-800) Registered Memory Kit	497767-B21
	HP 16GB (2x8GB) Dual Rank PC2-5300 (DDR2-667) Registered Memory Kit	408855-B21
	HP 64GB (8x8GB) Dual Rank PC2-5300 (DDR2-667) Registered Memory Kit	495605-B21
	NOTE: Memory must be installed in like-pairs, i.e. two of the same size. NOTE: Memory bus speeds will operate as follows: 2-4 DIMMs at 800MHz; 6 at 667MHz; 8 at 533MHz.	
HP Optical Drives	NOTE: Optical drives are ejectable.	
	HP 8X/24X SlimLine DVD-ROM Drive	264007-B21
	HP 8X Slim DVD+RW Drive	383975-B21
	HP Slimline CD-RW/DVD-ROM 24X Carbon Combo Drive	331903-B21
HP Hard Drives	NOTE: The components of a storage subsystem (e.g. the drive, the HBA/controller, firmware, and the server backplane) should operate at the same data transfer rate or the system bandwidth will be negotiated down to an acceptable level for all components. NOTE: Hard drives have either a one year or three year warranty; refer to the specific hard drive QuickSpecs for details.	
	SAS Hot Plug SFF (2.5-inch) Enterprise (ENT) Drives	
	HP 600GB 6G SAS 10K rpm SFF (2.5-inch) Dual Port Enterprise 3yr Warranty Hard Drive	581286-B21
	HP 450GB 6G SAS 10K rpm SFF (2.5-inch) Dual Port Enterprise 3yr Warranty Hard Drive	581284-B21
	HP 300GB 6G SAS 10K rpm SFF (2.5-inch) Dual Port Enterprise 3yr Warranty Hard Drive	507127-B21
	HP 146GB 6G SAS 15K rpm SFF (2.5-inch) Dual Port Enterprise 3yr Warranty Hard Drive	512547-B21

Core Options

HP 146GB 6G SAS 10K rpm SFF (2.5-inch) Dual Port Enterprise 3yr Warranty Hard Drive	507125-B21
HP 72GB 6G SAS 15K rpm SFF (2.5-inch) Dual Port Enterprise 3yr Warranty Hard Drive	512545-B21
NOTE: Please see the QuickSpecs for Technical Specifications and additional information: http://h18000.www1.hp.com/products/quickspecs/12244_div/12244_div.html (Worldwide)	
SAS Hot Plug SFF (2.5-inch) Midline (MDL) Drives	
HP 1TB 6G SAS 7.2K rpm SFF (2.5-inch) Hot Plug Midline 1yr Warranty Hard Drive	605835-B21
HP 500GB 6G SAS 7.2K rpm SFF (2.5-inch) Dual Port Midline 1yr Warranty Hard Drive	507610-B21
SATA Hot Plug SFF (2.5-inch) Entry (ETY) Drives	
HP 250GB 3G SATA 5.4K rpm SFF (2.5-inch) Entry 1yr Warranty Hard Drive	460355-B21
HP 120GB 1.5G SATA 5.4K rpm SFF (2.5-inch) Entry 1yr Warranty Hard Drive	458924-B21
NOTE: SATA drives have a 1 year warranty. Please see the QuickSpecs for Technical Specifications and additional information: http://h18000.www1.hp.com/products/quickspecs/13021_div/13021_div.html (Worldwide)	
SATA Hot Plug SFF (2.5-inch) Midline (MDL) Drives	
HP 1TB 3G SATA 7.2K rpm SFF (2.5-inch) Hot Plug Midline 1yr Warranty Hard Drive	625609-B21
HP 500GB 3G SATA 7.2K rpm SFF (2.5-inch) Midline 1yr Warranty Hard Drive	507750-B21
HP 160GB 3G SATA 7.2K rpm SFF (2.5-inch) Midline 1yr Warranty Hard Drive	530888-B21
NOTE: SATA drives have a 1 year warranty. Please see the QuickSpecs for Technical Specifications and additional information: http://h18000.www1.hp.com/products/quickspecs/13021_div/13021_div.html (Worldwide)	
SATA Hot Plug Midline (MDL) Solid State Drives	
HP 60GB 3G SATA SFF (2.5-inch) Midline 1yr Warranty Solid State Drive	572071-B21
HP 120GB 3G SATA SFF (2.5-inch) Midline 1yr Warranty Solid State Drive	572073-B21

Core Options

HP Networking	Gigabit Ethernet Adapters	
	HP NC112T PCI Express Gigabit Server Adapter	503746-B21
	HP NC360T PCI-E Dual Port Gigabit Server Adapter	412648-B21
	HP NC364T PCI-E Quad Port Gigabit Server Adapter NOTE: There is a maximum of five NC364T PCI Express Quad Port Gigabit Server Adapter NICs allowed in this server.	435508-B21
	HP NC373F PCI-E Multifunction 1000SX Gigabit Svr Adapter	394793-B21
	HP NC373T PCI-E Multifunction Gigabit Server Adapter	394791-B21
	HP NC375T PCI Express Quad Port Gigabit Server Adapter	538696-B21
	HP NC382T PCI Express Dual Port Multifunction Gigabit Server Adapter	458492-B21
	10 Gigabit Ethernet Adapters NOTE: No more than two 10GbE I/O devices are supported in a single ProLiant server. NOTE: A minimum of two Gigabytes (2 GB) of server memory is required per each adapter. NOTE: Direct Attach Cable (DAC) for copper environments or fiber transceivers and cables for fiber-optic environments must be purchased separately.	
	HP NC522SFP Dual Port 10GbE Gigabit Server Adapter	468332-B21
	HP NC523SFP 10Gb 2-port Server Adapter	593717-B21
	HP NC550SFP Dual Port 10GbE Server Adapter	581201-B21
	NOTE: Please see the QuickSpecs for Technical Specifications and additional information: www.hp.com/go/ProLiantNICs.	
HP InfiniBand	HP IB 4X DDR PCI-e DUAL PORT 0 mem HCA	483513-B21
HP Power Supplies	NOTE: Prior to making a power supply selection it is highly recommended that the HP Power Advisor is run to determine the right size power supply for your server configuration. The HP Power Advisor is located at: www.hp.com/go/hppoweradvisor. NOTE: If you require a local power cord, please check the Power Specifications below for the appropriate country-specific power cord, or consult the Power Cord Matrix: http://www.hp.com/go/powercordmatrix	
	910W (low line), 1300W (high line) Hot Plug Redundant Power Supply US - includes Nema 5-15P to IEC320-C19 power cord	348114-001
	910W (low line), 1300W (high line) Hot Plug Redundant Power Supply - includes C14 to C19 IEC power jumper cable	348114-B21

NOTE: Some options may not be integrated at the factory. To ensure only valid configurations are ordered, HP recommends the use of an HP approved configurator. Contact your local sales representative for additional information.

HP Insight Software	HP Insight Control	
	HP Insight Control including 1yr 24x7 Technical Support and Updates Electronic License	T9074BAE
	HP Insight Control including 1yr 24x7 Support ProLiant ML/DL/BL-bundle Electronic License	TC278AAE
	HP Insight Control including 1yr 24x7 Technical Support and Updates Single Server License	452148-B22
	HP Insight Software Media Kit NOTE: Insight Software DVD media without licenses. Contains HP Systems Insight Manager, HP Insight Control, HP Insight Dynamics, HP Insight Control for Microsoft System Center, and Virtual Connect Enterprise Manager software. Uses an integrated installer to perform quick and accurate software installation and updates. NOTE: Electronic and Flexible-Quantity licenses can be used to purchase multiple licenses with a single activation key. NOTE: Electronic software is available in all countries except China and Japan. Customers in China and Japan should order the physical equivalent. NOTE: Customer will receive a license entitlement certificate. The license entitlement certificate must be redeemed online or via fax in order to obtain the license activation key(s). Includes one year of 24 x 7 HP Software Technical Support and Update Service. NOTE: Licenses ship without media. The HP Insight Control Media Kit can be ordered separately, or can be downloaded at: http://www.hp.com/go/insightupdates. NOTE: For additional license options please see the Insight Control QuickSpecs at: http://h18000.www1.hp.com/products/quickspecs/12631_div/12631_div.html	436222-B21
	HP Insight Control for Linux	
	HP Insight Control for Linux including 1yr 24x7 Support Electronic License	TC213AAE
	HP Insight Control for Linux including 1yr 24x7 Support Single Server License	TC209A
	HP Insight Control for Linux Media Kit NOTE: Media pack DVD contains the ISO image for HP Insight Control for Linux, HP Systems Insight Manager, HP Insight Control power management, HP Insight Control virtual machine management, and an integrated installer. Servers must be acquired separately. NOTE: Licenses ship without media. The Media Kit for Insight Control for Linux can be ordered separately, or can be downloaded at: http://www.hp.com/go/ic-linux (click on Download button). NOTE: Electronic software is available in all countries except China and Japan. Customers in China and Japan should order the physical equivalent. NOTE: Electronic and Flexible-Quantity licenses can be used to purchase multiple licenses with a single set of activation keys. NOTE: For additional License Kits, including electronic licensing options, please see the QuickSpecs at: http://h18000.www1.hp.com/products/quickspecs/13019_div/13019_div.html	TC208A
	HP Integrated Lights-Out (iLO) Advanced	
	HP iLO Advanced including 1yr 24x7 Technical Support and Updates Electronic License	TA850AAE

	HP iLO Advanced including 1yr 24x7 Technical Support and Updates Single Server License NOTE: This license allows 1 server to be deployed and managed via HP iLO Advanced. Customer will receive a printed license entitlement certificate via physical shipment. The license entitlement certificate must be redeemed online or via fax in order to obtain the license activation key(s). Includes one year of 24 x 7 HP Software Technical Support Service. NOTE: Electronic software is available in all countries except China and Japan. Customers in China and Japan should order the physical equivalent. NOTE: For additional license kits, including electronic delivery options, please see the QuickSpecs at: http://h18000.www1.hp.com/products/quickspecs/12362_div/12362_div.html	512485-B21
High Performance Clusters	**HP Cluster Management Utility**	
	HP Cluster Management Utility Compute Node Flexible License NOTE: This part number can be used to purchase one certificate for multiple licenses with a single activation key. Each license is for one node (server). Customer will receive a printed end user license agreement and license entitlement certificate via physical shipment. The license entitlement certificate must be redeemed online in order to obtain a license key.	QL803A
	HP Cluster Management Utility License and Media NOTE: Order a minimum of one license per cluster to purchase media including software and documentation, which will be delivered to the customer, and also licenses CMU management. No license key is delivered or required. NOTE: For additional license kits please see the QuickSpecs at: http://h18004.www1.hp.com/products/quickspecs/12612_div/12612_div.html	433257-B21
	HP HPC Linux Value Pack	
	HP High Performance Computing Linux Value Pack 1 Processor Flexible License NOTE: This part number can be used to purchase one certificate for multiple licenses with a single activation key. Each license is for one socket (a.k.a. processor). Customer will receive a printed end user license agreement and license entitlement certificate via physical shipment. The license entitlement certificate must be redeemed online in order to obtain a license key.	TC293B
	HP High Performance Computing Linux Value Pack Media Kit NOTE: This part number can be used to purchase media including software and documentation, which will be delivered to the customer. NOTE: For additional license kits please see the QuickSpecs at: http://h18004.www1.hp.com/products/quickspecs/13485_div/13485_div.html	TC294A

Additional Options

HP I/O Accelerator Options	HP 160GB SLC PCIe ioDrive NOTE: A low-profile PCI bracket is included for use in low-profile slots.	600278-B21
	HP 320GB MLC PCIe ioDrive NOTE: A low-profile PCI bracket is included for use in low-profile slots.	600279-B21
	HP 320GB SLC PCIe ioDrive Duo	600281-B21
	HP 640GB MLC PCIe ioDrive Duo	600282-B21
	HP 1.28TB MLC PCIe ioDrive Duo	641027-B21
	NOTE: Please see the QuickSpecs for Technical Specifications and additional information: http://h18000.www1.hp.com/products/quickspecs/13587_div/13587_div.html (Worldwide)	
HP Storage Controllers	SAS Controllers	
	Smart Array P800 Controller	
	HP Smart Array P800/512 BBWC 2-ports Int/2-ports Ext PCIe x8 SAS Controller	381513-B21
	Smart Array P212 Controller	
	HP Smart Array P212/256 1-ports Int/1-ports Ext PCIe x8 SAS Controller	462834-B21
	HP Smart Array P212/ZM 1-ports Int/1-ports Ext PCIe x8 SAS Controller	462828-B21
	Smart Array P410 Controller	
	HP Smart Array P410/256 2-ports Int PCIe x8 SAS Controller	462862-B21
	HP Smart Array P410/512 BBWC 2-ports Int PCIe x8 SAS Controller	462864-B21
	HP Smart Array P410/512 FBWC 2-ports Int PCIe x8 SAS Controller	578230-B21
	HP Smart Array P410/1G FBWC 2-ports Int PCIe x8 SAS Controller	572532-B21
	Smart Array P411 Controller	
	HP Smart Array P411/512 BBWC 2-ports Ext PCIe x8 SAS Controller	462832-B21
	HP Smart Array P411/256 2-ports Ext PCIe x8 SAS Controller	462830-B21
	HP Smart Array P411/512 FBWC 2-ports Ext PCIe x8 SAS Controller	578229-B21
	HP Smart Array P411/1G FBWC 2-ports Ext PCIe x8 SAS Controller	572531-B21
	Smart Array P812 Controller	
	HP Smart Array P812/1G FBWC 2-ports Int/4-ports Ext PCIe x8 SAS Controller	487204-B21
	Optional Upgrades	
	HP Internal SAS/SATA Multi-Lane A Cable	389647-B21
	HP Mini SAS to 8484 32in/35in Cable Assembly	496016-B21
	HP 8484 to Mini SAS 33in Cable Assembly NOTE: Cable for use connecting the Smart Array P800 Controller to internal hard disk drives on select HP ProLiant G6 Servers.	591734-B21
	HP 1GB Flash Backed Cache	534562-B21
	HP 512MB Flash Backed Write Cache	534916-B21
	HP Smart Array Advanced Pack including 1yr 24x7 Technical Support and Updates Single Server License NOTE: This part number can be used to purchase a single license or to order multiple licenses with a single activation key. Customers will receive a license entitlement certificate via e-mail. The license entitlement certificate must be redeemed online or	516471-B21

	via fax in order to obtain the license activation key(s). Include one year of 24x7 HP Software Technical Support Services. NOTE: Please see the QuickSpecs for Technical Specifications and additional information: http://h18000.www1.hp.com/products/quickspecs/12616_div/12616_div.html (Smart Array P800 Controller) http://h18000.www1.hp.com/products/quickspecs/13203_div/13203_div.html (Smart Array P212 Controller) http://h18000.www1.hp.com/products/quickspecs/13201_div/13201_div.html (Smart Array P410 Controller) http://h18000.www1.hp.com/products/quickspecs/13202_div/13202_div.html (Smart Array P411 Controller) http://h18000.www1.hp.com/products/quickspecs/13558_div/13558_div.html (Smart Array P812 Controller) http://h18000.www1.hp.com/products/quickspecs/13200_div/13200_div.html (Smart Array Advanced Pack)	
	SAS HBA	
	HP Modular Smart Array SC08e 2-ports Ext PCIe x8 SAS Host Bus Adapter NOTE: This is a 2 x4 External Port HBA NOTE: This is only approved for the HP StorageWorks P2000 G3 SAS Modular Smart Array. NOTE: Please see the QuickSpecs for Technical Specifications and additional information: http://h18004.www1.hp.com/products/quickspecs/13651_div/13651_div.html (SC08e 6Gb HBA)	614988-B21
	SCSI HBA	
	HP SC11Xe Ultra320 Single Channel/ PCIe x4 SCSI Host Bus Adapter NOTE: Please see the following QuickSpecs for Technical Specifications and additional information: http://h18000.www1.hp.com/products/quickspecs/12566_div/12566_div.html (SC11Xe HBA)	412911-B21
	HP StorageWorks U320e SCSI Dual Channel Host Bus Adapter NOTE: Please refer to the HBA QuickSpecs for additional information at: http://www.hp.com/products/hba.	AH627A
HP Power Cords	HP DL580G2 C19-C14 12ft Power Cord	313228-B21

Additional Options

Tape Backup	NOTE: For the complete range of StorageWorks tape drives, autoloaders, libraries and media see: http://www.hp.com/go/tape. For hardware and software compatibility of HP StorageWorks tape backup products see: http://www.hp.com/go/connect.	
	HP StorageWorks DAT 320 USB in 1U Rack-mount Kit	AP835B
	HP StorageWorks LTO-5 Ultrium 3280 SAS Internal Tape Drive NOTE: For installation into 3U SAS rack kit (AG576B). No peripheral bay available for installation into the server. Connection using HP P212 Smart Array Controller SAS (462828-B21) recommended.	EH899A
	HP StorageWorks 1/8 G2 LTO-5 Ultrium 3000 SAS Tape Autoloader NOTE: Requires HP 1U Tape Autoloader Rack Kit (AH166A) for rack installation. Connection using HP P212 Smart Array Controller SAS (462828-B21) recommended.	BL536A
	HP StorageWorks MSL2024 1 LTO-5 Ultrium 3000 SAS Tape Library NOTE: Connection using HP P212 Smart Array Controller SAS (462828-B21) recommended.	BL537A
	HP StorageWorks MSL4048 2 LTO-5 Ultrium 3000 SAS Tape Library NOTE: Connection using HP P212 Smart Array Controller SAS (462828-B21) recommended.	BL538A
	HP StorageWorks MSL8096 2 LTO-5 Ultrium 3000 SAS Tape Library NOTE: Connection using HP P212 Smart Array Controller SAS (462828-B21) recommended.	BL539A
Disk Backup	NOTE: For the complete range of StorageWorks D2D Backup Systems see: http://www.hp.com/go/d2d. For the complete range of StorageWorks RDX drives and media see: http://www.hp.com/go/rdx. For hardware and software compatibility of HP StorageWorks disk backup products see: http://www.hp.com/go/connect.	
	HP StorageWorks D2D Backup Systems with Backup Data Deduplication	
	HP StorageWorks D2D2504i Backup System NOTE: 3.0TB of useable network disk backup capacity. Network connected appliance with connectivity using the iSCSI protocol. If the server requires a hardware iSCSI initiator, the QLogic QLA4050 Host Bus Adapter is recommended.	EJ002B
	HP StorageWorks D2D4112 Backup System NOTE: 9.0TB (expandable to 18.0TB) of useable network disk backup capacity. Fibre Channel SAN connected appliance. Direct server attach is not supported, requires connection via SAN fabric.	EH993B
	HP StorageWorks RDX Removable Disk Backup Systems USB	
	HP StorageWorks RDX500 Internal Removable Disk Backup System NOTE: For installation into 1U USB Rack-Mount Kit (A8007A). No peripheral bay available for drive installation into the server. 500GB of disk capacity per data cartridge.	AJ934A
	HP StorageWorks RDX 1TB Internal Removable Disk Backup System NOTE: For installation into 1U USB Rack-Mount Kit (A8007A). No peripheral bay available for drive installation into the server. 1 TB of disk capacity per data cartridge.	BV847A

Additional Options

HP StorageWorks Options	NOTE: The following is a list of all Fibre Channel Host Bus Adapters for Windows and Linux. For detailed compatibility information please see: http://h18006.www1.hp.com/storage/saninfrastructure/hba.html	
	Brocade Fibre Channel HBAs	
	HP StorageWorks 81B PCIe 8Gb Fibre Channel Single Port Host Bus Adapter	AP769A
	HP StorageWorks 82B PCIe 8Gb Fibre Channel Dual Port Host Bus Adapter	AP770A
	HP StorageWorks 41B PCIe 4Gb Fibre Channel Single Port Host Bus Adapter	AP767A
	HP StorageWorks 42B PCIe 4Gb Fibre Channel Dual Port Host Bus Adapter	AP768A
	Emulex Fibre Channel HBAs	
	HP StorageWorks 81E 8Gb Single Port PCI-e Fibre Channel Host Bus Adapter	AJ762A
	HP StorageWorks 82E 8Gb Dual Port PCI-e Fibre Channel Host Bus Adapter	AJ763A
	HP StorageWorks FC2142SR 4Gb PCIe Host Bus Adapter	A8002A
	HP StorageWorks FC2242SR 4Gb PCIe DC Host Bus Adapter	A8003A
	QLogic Fibre Channel HBAs	
	HP StorageWorks 81Q PCI-e Fibre Channel Host Bus Adapter	AK344A
	HP StorageWorks 82Q 8Gb Dual Port PCI-e Fibre Channel Host Bus Adapter	AJ764A
	HP StorageWorks FC1142SR 4Gb PCIe Host Bus Adapter	AE311A
	HP StorageWorks FC1242SR 4Gb PCIe DC Host Bus Adapter	AE312A
	StorageWorks Converged Network Adapter	
	HP StorageWorks CN1000E 2P Converged Network Adapter	AW520A
	HP CN1000Q 2P Converged Network Adapter	BS668A
HP Modular Smart Array	MSA SAN Storage Arrays	
	HP StorageWorks 60 Modular Smart Array NOTE: Please see the QuickSpecs for additional options and configuration information at: http://h18000.www1.hp.com/products/quickspecs/12627_div/12627_div.html	418408-B21
	HP StorageWorks 70 Modular Smart Array NOTE: Please see the QuickSpecs for additional options and configuration information at: http://h18000.www1.hp.com/products/quickspecs/12652_div/12652_div.html	418800-B21
	Disk Enclosures	
	HP StorageWorks D2600 Disk Enclosure	AJ940A
	HP StorageWorks D2700 Disk Enclosure NOTE: Please see the QuickSpecs for additional options and configuration information at: http://h18000.www1.hp.com/products/quickspecs/13404_div/13404_div.html (Worldwide)	AJ941A

Additional Options

HP Uninterruptible Power Systems	HP Rack-mountable UPS	
	HP R/T3000 Uninterruptible Power System (UPS)	
	HP R/T3000 3300VA High Voltage NA/JPN 2U Rackmount Uninterruptible Power System	AF453A
	HP R/T3000 3300VA INTL 2U Rackmount Uninterruptible Power System	AF454A
	NOTE: Please see the QuickSpecs for additional information: http://h18000.www1.hp.com/products/quickspecs/13417_div/13417_div.html (Worldwide)	
	HP Rack-Mountable R5500 UPS	
	HP R5500 6000VA INTL 3U Rackmount Uninterruptible Power System	AF416A
	HP R5500 5000kVA NA/JP 3U Rackmount Uninterruptible Power System	AF426A
	NOTE: Please see UPS QuickSpecs for additional information: http://h18000.www1.hp.com/products/quickspecs/11871_div/11871_div.html (Worldwide)	
	NOTE: For additional information on HP Uninterruptible Power Systems please go to: www.hp.com/servers/rackups.	
	NOTE: Please see the UPS and PDU cable matrix's on the HP Power Protection and Management page. Under Power Cords, click on the "HP Power Cord Matrix" link. That link will list cable descriptions, requirements, and specifications for UPS and PDU units. Please see the following link: www.hp.com/products/powercords.	
HP Power Distribution Units	HP Monitored Power Distribution Unit: Half Rack Version	
	HP 4.9 kVA S124 Monitored PDU- single input, 1Ø, 24A (NA/JPN)	AF914A
	HP 7.3 kVA S132 Monitored PDU- single input, 1Ø, 32A (INTL)	AF915A
	NOTE: Please see the following QuickSpecs for additional information: http://h18000.www1.hp.com/products/quickspecs/12118_div/12118_div.html (Worldwide)	
	HP Monitored Power Distribution Unit: Full Rack Version	
	HP 8.6 kVA S1324 Monitored PDU- single input, 3Ø, 24A (NA/JPN)	AF504A
	HP 8.3 S1140 Monitored PDU- single input, 1Ø, 40A (NA/JPN)	AF506A
	HP 11 kVA S1316 Monitored PDU- single input, 3Ø, 16A (INTL)	AF508A
	HP 7.3 kVA S1132 Monitored PDU- single input, 1Ø, 32A (INTL)	AF510A
	NOTE: Please see the following QuickSpecs for additional information: http://h18000.www1.hp.com/products/quickspecs/12118_div/12118_div.html (Worldwide)	
	Modular Power Distribution Units 1U/0U (Up to 32 outlets)	
	NOTE: 1U/0U mounting brackets shipped with the unit (optimized for 10000 and 9000 series racks).	
	HP Modular Power Distribution Units (mPDU), High Volt Model, 24A (200-240 VAC) (NA, Japan)	252663-D72
	8.3kVA Model - mPDU, 40A, High (power cord attached) (NA/JPN)	252663-D73
	HP Modular Power Distribution Units (mPDU), High Volt Model, 32A (200-240 VAC) (Int'l)	252663-B31

	HP Modular Power Distribution Units (mPDU), High Volt Model, 16A (200-240 VAC) (WW) NOTE: This PDU has a detachable input power cord and allows for adaptability to country specific power requirements. NOTE: For additional information on HP Power Distribution Units including accessories please go to: www.hp.com/go/pdu (Worldwide) NOTE: Please see the UPS and PDU cable matrix's on the HP Power Protection and Management page. Under Power Cords, click on the "HP Power Cord Matrix" link. That link will list cable descriptions, requirements, and specifications for UPS and PDU units. Please see the following link: www.hp.com/products/powercords.	252663-B24
HP Rack Series	Rack 10000 G2 series	
	HP 10642 G2 Pallet Universal Rack	AF001A
	HP 10642 G2 Shock Universal Rack	AF002A
	HP 10642 G2 1200mm deep Shock Rack	AF092A
	HP 10647 G2 1200mm deep Shock Rack	AF094A
	NOTE: It is mandatory to use a shock pallet when shipping racks with equipment installed. NOTE: Please see the Rack 10000 G2 QuickSpecs for Technical Specifications such as height, width, depth, weight, and color: http://h18000.www1.hp.com/products/quickspecs/12402_div/12402_div.html (Worldwide) NOTE: For additional information regarding Rack Cabinets, please see the following URL: http://www.hp.com/go/rackandpower. NOTE: The increasing power of new high-performance processor technology requires increased cooling efficiency for rack-mounted servers. The 10000 G2 Series Racks provide enhanced airflow for maximum cooling, allowing these racks to be fully loaded with servers using the latest processors. CAUTION: If a third-party rack is used, observe the following additional requirements to ensure adequate airflow and to prevent damage to the equipment: Front and rear doors: If your 42U server rack includes closing front and rear doors, you must allow 830 square inches (5,350 sq cm) of hole evenly distributed from top to bottom to permit adequate airflow (equivalent to the required 64 percent open area for ventilation). Side: The clearance between the installed rack component and the side panels of the rack must be a minimum of 2.75 inches (7 cm). CAUTION: Always use blanking panels to fill all remaining empty front panel U-spaces in the rack. This arrangement ensures proper airflow. Using a rack without blanking panels results in improper cooling that can lead to thermal damage. NOTE: Quick deploy rail system provides tool-free support for racks with square or round mounting holes (including Compaq/HP 7000, 9000, 10000 G2 and HP series), with an adjustment range of 24" - 36". The ambidextrous cable management arm can be mounted on either the left or right side for improved cable management.	
HP Rack Options	Keyboards and Monitors	
	HP TFT7600 G2 KVM Console Rackmount Keyboard US Monitor	AZ870A
	HP TFT7600 G2 KVM Console Rackmount Keyboard UK Monitor	AZ871A

HP TFT7600 G2 KVM Console Rackmount Keyboard DE Monitor	AZ872A
HP TFT7600 G2 KVM Console Rackmount Keyboard FR Monitor	AZ873A
HP TFT7600 G2 KVM Console Rackmount Keyboard IT Monitor	AZ874A
HP TFT7600 G2 KVM Console Rackmount Keyboard ES Monitor	AZ875A
HP TFT7600 G2 KVM Console Rackmount Keyboard DK Monitor	AZ876A
HP TFT7600 G2 KVM Console Rackmount Keyboard NO Monitor	AZ877A
HP TFT7600 G2 KVM Console Rackmount Keyboard SE/FI Monitor	AZ878A
HP TFT7600 G2 KVM Console Rackmount Keyboard CH Monitor	AZ879A
HP TFT7600 G2 KVM Console Rackmount Keyboard PT Monitor	AZ880A
HP TFT7600 G2 KVM Console Rackmount Keyboard BE Monitor	AZ881A
HP TFT7600 G2 KVM Console Rackmount Keyboard JP Monitor	AZ882A
HP TFT7600 G2 KVM Console Rackmount Keyboard RU Monitor	AZ883A
HP TFT7600 G2 KVM Console Rackmount Keyboard Intl Monitor	AZ884A
HP TFT7600 G2 KVM Console Rackmount Keyboard US TAA Monitor	AZ885A
NOTE: Please see the QuickSpecs for Technical Specifications and additional information: http://h18000.www1.hp.com/products/quickspecs/13731_div/13731_div.html (Worldwide)	
HP 1U US Rackmount Keyboard with USB	AG072A
HP 1U UK Rackmount Keyboard with USB	AG073A
HP 1U DE Rackmount Keyboard with USB	AG074A
HP 1U FR Rackmount Keyboard with USB	AG075A
NOTE: Please see the QuickSpecs for Technical Specifications and additional information: http://h18000.www1.hp.com/products/quickspecs/12465_div/12465_div.html (Worldwide)	
NOTE: For additional information regarding Rack Options, please see the following URL: http://www.hp.com/go/rackandpower.	
HP Server Console Switches	
HP Server console switch 0x2x8	AF616A
HP Server console switch 0x2x16	AF617A
NOTE: Please see the QuickSpecs for Technical Specifications and additional information: http://h18000.www1.hp.com/products/quickspecs/11834_div/11834_div.html (Worldwide)	
HP Server Console Switch G2 with Virtual Media & CAC	
0x2x16 KVM Server Console G2 Switch with Virtual Media and CAC	AF618A
0x2x32 KVM Server Console G2 Switch with Virtual Media and CAC	AF619A
NOTE: Please see the QuickSpecs for Technical Specifications and additional information: http://h18000.www1.hp.com/products/quickspecs/13475_div/13475_div.html (Worldwide)	
HP IP Console Switch G2 with Virtual Media & CAC	
1x1Ex8 KVM IP Console Switch G2 with Virtual Media and CAC	AF620A

Additional Options

	2x1Ex16 KVM IP Console Switch G2 with Virtual Media and CAC	AF621A
	4x1Ex32 KVM IP Console Switch G2 with Virtual Media and CAC	AF622A
	NOTE: Please see the QuickSpecs for Technical Specifications and additional information: http://h18000.www1.hp.com/products/quickspecs/13474_div/13474_div.html (Worldwide)	
HP USB and SD Options	HP USB 2-Button Optical Scroll Mouse	DC172B
	HP USB Standard Keyboard US	DT528A#ABA
	HP 2GB USB Flash Media Drive Key Kit	608447-B21
	NOTE: HP qualified blank USB key for use with HP ProLiant servers that support the VMware virtualization environment and other HP value-add software like SmartStart. HP recommends this industry standard USB flash device for use with VMware ESXi. USB device must be installed in the internal slot of the ProLiant server for use with VMware ESXi. Refer to HP VMware Getting Started Guide for installation instructions.	
HP Care Pack Services	Hardware Services On-site Service	
	HP 3 year 4 hour 13x5 ProLiant DL58x Hardware Support	U4607E
	HP 3 year 4 hour 24x7/ProLiant DL58x Hardware Support	U4608E
	Hardware Services 6-Hour Call to Repair On-site Service	
	HP 3 year 6 hour 24x7 Call to Repair ProLiant DL58x Hardware Support	U4609E
	Installation & Start-up Services	
	HP Install ProLiant DL58x Service	U4617E
	HP Startup ProLiant DL58x Service	U4618E
	Support Plus	
	HP 3 year Support Plus Microsoft ProLiant DL58x Service	U4619E
	Support Plus 24	
	HP 3 year Support Plus 24 Microsoft ProLiant DL58x Service	U4620E
	HP 3 year Support Plus 24 SuSE ProLiant DL58x Service	U6316E
	NOTE: For more information, customer/resellers can contact: http://www.hp.com/services/carepack.	

NOTE: Standard memory configurations listed do not apply to "Factory Integrated Models."

HP ProLiant DL585 G6 Models

Standard Memory

16 GB PC2-6400 DDR2 SDRAM memory running at 800 MHz

DIMMs must be installed in pairs.

- DIMM installed on the same memory bank must have the same part number.
- DIMMs installed in different banks can be of different sizes.
- DIMMs must be installed in decreasing capacity with the largest DIMMs installed in the banks furthest away from each processor.
- DIMM banks are active only when the corresponding processor socket is populated.

NOTE: Memory must be installed in like-pairs, i.e. two of the same size.

NOTE: Memory bus speeds will operate as follows: 2-4 DIMMs at 800MHz; 6 at 667MHz; 8 at 533MHz.

Standard Memory Configuration (2.2GHz model) Total Memory = 4 GB								
	1 (Slot furthest from processor)	2	3	4	5	6	7	8 (Slot closest to processor)
Processor 1 Memory Bus	1 GB	1 GB	Empty	Empty	Empty	Empty	Empty	Empty
Processor 2 Memory Bus	1 GB	1 GB	Empty	Empty	Empty	Empty	Empty	Empty
Processor 3 Memory Bus	Empty	Empty	Empty	Empty	Empty	Empty	Empty	Empty
Processor 4 Memory Bus	Empty	Empty	Empty	Empty	Empty	Empty	Empty	Empty

Standard Memory Configuration (2.3GHz model) Total Memory = 8 GB								
	1 (Slot furthest from processor)	2	3	4	5	6	7	8 (Slot closest to processor)
Processor 1 Memory Bus	1 GB	1 GB	Empty	Empty	Empty	Empty	Empty	Empty
Processor 2 Memory Bus	1 GB	1 GB	Empty	Empty	Empty	Empty	Empty	Empty
Processor 3 Memory Bus	1 GB	1 GB	Empty	Empty	Empty	Empty	Empty	Empty
Processor 4 Memory Bus	1 GB	1 GB	Empty	Empty	Empty	Empty	Empty	Empty

Standard Memory Configuration (2.4GHz and 2.5GHz models) Total Memory = 16 GB

Memory

	1 (Slot furthest from processor)	2	3	4	5	6	7	8 (Slot closest to processor)
Processor 1 Memory Bus	2 GB	2 GB	Empty	Empty	Empty	Empty	Empty	Empty
Processor 2 Memory Bus	2 GB	2 GB	Empty	Empty	Empty	Empty	Empty	Empty
Processor 3 Memory Bus	2 GB	2 GB	Empty	Empty	Empty	Empty	Empty	Empty
Processor 4 Memory Bus	2 GB	2 GB	Empty	Empty	Empty	Empty	Empty	Empty

Examples of other optional configurations include, but are not limited to:

Example #1: Optional Memory Configuration with DIMM mixing Standard Memory plus Optional Memory and Processors Total Memory = 34 GB								
	1	2	3	4	5	6	7	8
Processor 1 Memory Bus	2 GB	2 GB	1 GB	1 GB	512 MB	512 MB	512 MB	512 MB
Processor 2 Memory Bus	2 GB	2 GB	1 GB	1 GB	512 MB	512 MB	512 MB	512 MB
Processor 3 Memory Bus	2 GB	2 GB	2 GB	2 GB	1 GB	1 GB	512 MB	512 MB
Processor 4 Memory Bus	1 GB	1 GB	1 GB	1 GB	1 GB	1 GB	512 MB	512 MB

Example #2: Optional Memory Configuration with Partial Bus Population Standard Memory plus Optional Memory and Processors Total Memory = 8 GB								
	1	2	3	4	5	6	7	8
Processor 1 Memory Bus	512 MB	512 MB	512 MB	512 MB	Empty	Empty	Empty	Empty
Processor 2 Memory Bus	512 MB	512 MB	512 MB	512 MB	Empty	Empty	Empty	Empty
Processor 3 Memory Bus	512 MB	512 MB	512 MB	512 MB	Empty	Empty	Empty	Empty
Processor 4 Memory Bus	512 MB	512 MB	512 MB	512 MB	Empty	Empty	Empty	Empty

Memory

Example #3: Maximum Memory Configuration Maximum Memory (Standard replaced with Optional Memory) Total Memory = 256 GB								
	1	2	3	4	5	6	7	8
Processor 1 Memory Bus	8 GB	8 GB	8 GB	8 GB	8 GB	8 GB	8 GB	8 GB
Processor 2 Memory Bus	8 GB	8 GB	8 GB	8 GB	8 GB	8 GB	8 GB	8 GB
Processor 3 Memory Bus	8 GB	8 GB	8 GB	8 GB	8 GB	8 GB	8 GB	8 GB
Processor 4 Memory Bus	8 GB	8 GB	8 GB	8 GB	8 GB	8 GB	8 GB	8 GB

The following memory options are available from HP:

Memory	HP 2GB (2x1GB) Single Rank PC2-6400 (DDR2-800) Registered Memory Kit	497763-B21
	HP 4GB (2x2GB) Single Rank PC2-6400 (DDR2-800) Registered Memory Kit	497765-B21
	HP 8GB (2x4GB) Dual Rank PC2-6400 (DDR2-800) Registered Memory Kit	497767-B21
	HP 16GB (2x8GB) Dual Rank PC2-5300 (DDR2-667) Registered Memory Kit	408855-B21
	HP 64GB (8x8GB) Dual Rank PC2-5300 (DDR2-667) Registered Memory Kit	495605-B21

NOTE: Memory must be installed in like-pairs, i.e. two of the same size.

NOTE: Memory bus speeds will operate as follows: 2-4 DIMMs at 800MHz; 6 at 667MHz; 8 at 533MHz.

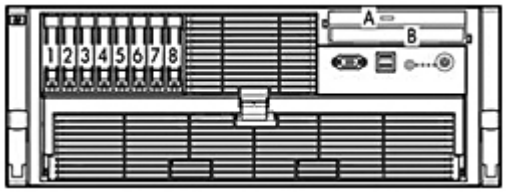

A	Ejectable: Slimline Diskette or Optical Drive (Optional)
B	Ejectable: Slimline Optical Drive (DVD/CD-RW Standard)
1-8	SFF SAS Internal Drive cage

Drive Support

	Quantity Supported	Position Supported	Controller
Ejectable Slimline Drives			
1.44-MB slimline Diskette Drive	Up to 1	A or B Based on Boot Device Selector Switch	Integrated
HP 8X/24X SlimLine DVD-ROM Drive	Up to 2	A or B	Integrated IDE
HP Slimline CD-RW/DVD-ROM 24X Carbon Combo Drive	Up to 2	A or B	Integrated IDE
HP 8X Slim DVD+RW Drive	Up to 2	A or B	Integrated IDE

Hard Drives

NOTE: The components of a storage subsystem (e.g. the drive, the HBA/controller, firmware, and the server backplane) should operate at the same data transfer rate or the system bandwidth will be negotiated down to an acceptable level for all components.

NOTE: Hard drives have either a one year or three year warranty; refer to the specific hard drive QuickSpecs for details.

SAS Hot Plug SFF (2.5-inch) Enterprise (ENT) Drives

	Quantity Supported	Position Supported	Controller
600GB 6G SAS 10K DP 450GB 6G SAS 10K DP 300GB 6G SAS 10K DP 146GB 6G SAS 15K DP 146GB 6G SAS 10K DP 72GB 6G SAS 15K DP	Up to 8	1-8	HP Smart Array P800/512 BBWC Controller HP Smart Array P212/Zero Memory Controller HP Smart Array P212/ 256 MB Controller HP Smart Array P410/256 MB Controller HP Smart Array P410/512 MB BBWC Controller HP Smart Array P410/512 MB FBWC Controller HP Smart Array P410/1G FBWC Controller HP Smart Array P411/256 MB Controller HP Smart Array P411/512 MB BBWC Controller HP Smart Array P411/512 MB FBWC Controller HP Smart Array P411/1G FBWC Controller HP Smart Array P812/1G Flash Backed Cache Controller

SAS Hot Plug SFF (2.5-inch) Midline (MDL) Drives

Storage

	Quantity Supported	Position Supported	Controller
1TB 6GB SAS 7.2K DP 500GB 6G SAS 7.2K DP	Up to 8	1-8	HP Smart Array P800/512 BBWC Controller HP Smart Array P212/Zero Memory Controller HP Smart Array P212/ 256 MB Controller HP Smart Array P410/256 MB Controller HP Smart Array P410/512 MB BBWC Controller HP Smart Array P410/512 MB FBWC Controller HP Smart Array P410/1G FBWC Controller HP Smart Array P411/256 MB Controller HP Smart Array P411/512 MB BBWC Controller HP Smart Array P411/512 MB FBWC Controller HP Smart Array P411/1G FBWC Controller HP Smart Array P812/1G Flash Backed Cache Controller

SATA Hot Plug SFF (2.5-inch) Entry (ETY) Drives

	Quantity Supported	Position Supported	Controller
250GB 3G SATA 5.4K 120GB 1.5G SATA 5.4K	Up to 8	1-8	HP Smart Array P800/512 BBWC Controller HP Smart Array P212/Zero Memory Controller HP Smart Array P212/ 256 MB Controller HP Smart Array P410/256 MB Controller HP Smart Array P410/512 MB BBWC Controller HP Smart Array P410/512 MB FBWC Controller HP Smart Array P410/1G FBWC Controller HP Smart Array P411/256 MB Controller HP Smart Array P411/512 MB BBWC Controller HP Smart Array P411/512 MB FBWC Controller HP Smart Array P411/1G FBWC Controller HP Smart Array P812/1G Flash Backed Cache Controller

SATA Hot Plug SFF (2.5-inch) Midline (MDL) Drives

	Quantity Supported	Position Supported	Controller
1TB 3G SATA 7.2K 500GB 3G SATA 7.2K 160GB 3G SATA 7.2K	Up to 8	1-8	HP Smart Array P800/512 BBWC Controller HP Smart Array P212/Zero Memory Controller HP Smart Array P212/ 256 MB Controller HP Smart Array P410/256 MB Controller HP Smart Array P410/512 MB BBWC Controller HP Smart Array P410/512 MB FBWC Controller HP Smart Array P410/1G FBWC Controller HP Smart Array P411/256 MB Controller HP Smart Array P411/512 MB BBWC Controller HP Smart Array P411/512 MB FBWC Controller HP Smart Array P411/1G FBWC Controller HP Smart Array P812/1G Flash Backed Cache Controller

Storage

SATA Hot Plug Midline (MDL) Solid State Drives

	Quantity Supported	Position Supported	Controller
60GB 3.0G SATA SSD 120GB 3.0G SATA SSD	Up to 8	1-8	HP Smart Array P212/Zero Memory Controller HP Smart Array P212/ 256 MB Controller HP Smart Array P410/256 MB Controller HP Smart Array P410/512 MB BBWC Controller HP Smart Array P410/512 MB FBWC Controller HP Smart Array P410/1G FBWC Controller HP Smart Array P411/256 MB Controller HP Smart Array P411/512 MB BBWC Controller HP Smart Array P411/512 MB FBWC Controller HP Smart Array P411/1G FBWC Controller HP Smart Array P812/1G Flash Backed Cache Controller

External Storage

	Quantity Supported	Position Supported	Host Controller or Adapter
60 Modular Smart Array	Up to 4	External	HP Smart Array P212/Zero Memory Controller HP Smart Array P212/ 256 MB Controller
	Up to 8		HP Smart Array P800/512 BBWC Controller HP Smart Array P411/256 MB Controller HP Smart Array P411/512 MB BBWC Controller HP Smart Array P411/512 MB FBWC Controller HP Smart Array P411/1G FBWC Controller
70 Modular Smart Array	Up to 2	External	HP Smart Array P212/Zero Memory Controller HP Smart Array P212/ 256 MB Controller
	Up to 4		HP Smart Array P800/512 BBWC Controller HP Smart Array P411/256 MB Controller HP Smart Array P411/512 MB BBWC Controller HP Smart Array P411/512 MB FBWC Controller HP Smart Array P411/1G FBWC Controller
D2600 Disk Enclosure	Up to 4	External	HP Smart Array P211/256 MB Controller
	Up to 8	External	HP Smart Array P411/256MB BBWC Controller HP Smart Array P411/512 MB BBWC Controller HP Smart Array P411/1G Flash Backed Write Cache Controller HP Smart Array P812/1G Flash Backed Cache Controller
D2700 Disk Enclosure	Up to 2	External	HP Smart Array P212/ 256 MB Controller
	Up to 4		HP Smart Array P411/256 MB Controller HP Smart Array P411/512 MB BBWC Controller HP Smart Array P411/512 MB FBWC Controller HP Smart Array P411/1G FBWC Controller

Storage

Maximum Storage Capacity - (External Enclosures Attached)

Internal	8TB (8 x 1TB SFF SAS/SATA Drives)
External	192TB (8 D2600 enclosures @ 12 drives per enclosure x 2TB SATA)
Total	200TB

Maximum Storage Capacity - (External Enclosures Attached)

Internal	8TB (8 x 1TB SFF SAS/SATA Drives)
External	100TB (4 D2700 enclosures @ 25 drives per enclosure x 1TB SATA)
Total	108TB

Tape and Disk-Based Backup

NOTE: For the complete range of StorageWorks tape drives, autoloaders, libraries and media, including the internal fitting models, see: http://www.hp.com/go/tape. For the complete range of StorageWorks D2D Backup Systems see: http://www.hp.com/go/d2d. For the complete range of StorageWorks RDX drives and media see: http://www.hp.com/go/rdx. For hardware and software compatibility of HP StorageWorks disk and tape backup products see: http://www.hp.com/go/connect.

	Position Supported	Controller	Controller Part Number
HP StorageWorks SCSI Tape Drives LTO-1 Ultrium 232 LTO-2 Ultrium 448 LTO-3 Ultrium 920 LTO-3 Ultrium 960 LTO4 Ultrium 1760 LTO-4 Ultrium 1840 DAT 40 DAT 72 DAT 160 1U Rack-Mount Kit 3U Rack-Mount Kit	External	HP SC11Xe Ultra320 Single Channel/ PCIe x4 SCSI Host Bus Adapter NOTE: Please check the full compatibility information at: http://www.hp.com/go/connect	412911-B21
HP StorageWorks USB Tape Drives DAT 40 DAT 72 DAT 160 DAT 320 1U USB Rack-Mount Kit	External	USB 2.0 Port	N/A
HP StorageWorks SAS Tape Drives DAT 160 DAT 320 LTO-2 Ultrium 448 LTO-3 Ultrium 920 LTO-4 Ultrium 1760	External	HP Smart Array P212/ZM 1-ports Int/1-ports Ext PCIe x8 SAS Controller NOTE: Please check the full compatibility information at: http://www.hp.com/go/connect	462828-B21

Storage

LTO-4 Ultrium 1840
LTO-5 Ultrium 3000
LTO-5 Ultrium 3280
1U Rack-Mount Kit
3U Rack-Mount Kit

HP StorageWorks SCSI Tape Autoloaders DAT 72x10 Autoloader 1/8 G2 Autoloader	External	HP SC11Xe Ultra320 Single Channel/ PCIe x4 SCSI Host Bus Adapter NOTE: Please check the full compatibility information at: http://www.hp.com/go/connect	412911-B21
HP StorageWorks SCSI Tape Libraries, External MSL2024 MSL4048 MSL8096 MSL6000	External	HP StorageWorks U320e SCSI Dual Channel Host Bus Adapter NOTE: Please check the full compatibility information at: http://www.hp.com/go/connect	AH627A
HP StorageWorks SAS Tape Autoloaders and Libraries 1/8 G2 Autoloader MSL2024 MSL4048 MSL8096	External	HP Smart Array P212/ZM 1-ports Int/1-ports Ext PCIe x8 SAS Controller NOTE: Please check the full compatibility information at: http://www.hp.com/go/connect	462828-B21
HP StorageWorks Fibre Channel Tape Libraries MSL2024 MSL4048 MSL8096 MSL6000	External	Please consult the EBS connectivity matrix at: http://www.hp.com/go/ebs for connectivity information and the supported Fibre Channel HBAs shown in this QuickSpecs.	N/A
HP StorageWorks USB RDX Removable Disk Backup System RDX160 RDX320 RDX500 RDX750 RDX1TB	External	USB 2.0 Port	N/A
HP StorageWorks D2D Backup Systems, iSCSI D2D2503i D2D4004i	External	Embedded Network Controller. If the server requires a hardware iSCSI initiator, the QLogic QLA4050 Host Bus Adapter is recommended.	N/A

Storage

HP StorageWorks D2D Backup Systems, Fibre Channel D2D4000fc	External	Direct server attach is not supported, requires connection via SAN fabric. See: http://www.hp.com/go/connect	N/A

Power Specifications

Part number	348114-001
Operational Input Voltage Range (Vrms)	90 to 264
Frequency Range (Nominal) (Hz)	47 to 63 (50/60)

Nominal Input Voltage (Vrms)	100	115	208	220	230	240
Max Rated Output Wattage Rating	910	910	1300	1300	1300	1300
Nominal Input Current (A rms)	11.9	10.2	7.7	7.3	6.9	6.6
Max Rated Input Wattage Rating (Watts)	1163	1148	1566	1566	1548	1548
Max. Rated VA (Volt-Amp)	1186	1172	1598	1598	1579	1579
Efficiency (%)	80	81	83	83	84	84
Power Factor	0.98		0.98			
Leakage Current (mA)	0.43	0.50	0.90	0.96	1.00	1.04
Max. Inrush Current (A peak)	100	100	100	100	100	100
Max. Inrush Current duration (mS)	10					

NOTE: To review typical system power ratings use the HP Power Advisor which is available online located at url: www.hp.com/go/proliant-energy-efficient or www.hp.com/go/hppoweradvisor

- Click on: "ProLiant Servers"
- Click on the Server of interest. Example: DL585 G6
- Click on: "Power Calculator" link. (You may need to scroll down to see it)
- There are certain Dual-core, lowline, max configurations that are not supported. All highline configurations are supported. Consult the Power Calculator to determine if your lowline configuration is supported.

Standard Rack Model Power Cords / Jumper Cords	**Description**
Asia Pacific	IEC320-C14 to IEC320-C19 Jumper Cord
Europe	IEC320-C14 to IEC320-C19 Jumper Cord
Japan	JIS C8303 to IEC320-C19
	IEC320-C14 to IEC320-C19 Jumper Cord
PRC	IEC320-C14 to IEC320-C19 Jumper Cord
USA	IEC320-C14 to IEC320-C19 Jumper Cord

System Unit	**Dimensions** (H x W x D) (with bezel)	6.94 x 19 x 26.5 in (17.6 x 48.3 x 67.3 cm)	
	Weight (approximate)	Maximum (all hard drives, power supplies, and processors installed)	95 lb (43 kg)
		Minimum (one hard drive, power supply, and processor installed)	79 lb (36 kg)
	Input Requirements (per power supply)	Rated Line Voltage	90 - 132 VAC, 180 - 264 VAC
		Rated Input Current	12 A (at 100 VAC), 8 A (at 200 VAC)
		Rated Input Frequency	47 to 63 Hz
		Rated Input Power	1161 W (at 100 VAC), 1598 W (at 200 VAC)
	BTU Rating	Maximum	3985 BTU/hr (at 100 VAC), 5457 BTU/hr (at 200 VAC)
	Power Specifications	NOTE: To review typical system power ratings use the HP Power Advisor which is available online located at url: www.hp.com/go/proliant-energy-efficient or www.hp.com/go/hppoweradvisor • Click on the system of interest. Example: DL585 G6 • Follow the instructions of the next screens	
	Power Supply Output (per power supply)	Rated Steady-State Power	910 W (at 100 VAC), 1300 W (at 200 VAC)
		Maximum Peak Power	960 W (at 100 VAC), 1420 W (at 200 VAC)
	System Inlet Temperature	Operating	10° to 35°C (50° to 95°F) at sea level with an altitude derating of 1.0°C per every 305 m (1.8°F per every 1000 ft) above sea level to a maximum of 3050 m (10,000 ft), no direct sustained sunlight. Maximum rate of change is 10°C/hr (18°F/hr). The upper limit may be limited by the type and number of options installed. System performance may be reduced if operating with a fan fault or above 30°C (86°F).
		Non-operating	-30° to 60°C (-22° to 140°F). Maximum rate of change is 20°C/hr (36°F/hr).
	Relative Humidity (non-condensing)	Operating	10 to 90% relative humidity (Rh), 28°C (82.4°F) maximum wet bulb temperature, non-condensing.
		Non-operating	5 to 95% relative humidity (Rh), 38.7°C (101.7°F) maximum wet bulb temperature, non-condensing.

	Altitude	Operating	3050 m (10,000 ft). This value may be limited by the type and number of options installed. Maximum allowable altitude change rate is 457 m/min (1500 ft/min).
		Non-operating	9144 m (30,000 ft). Maximum allowable altitude change rate is 457 m/min (1500 ft/min).
	Acoustic Noise	Listed are the declared A-Weighted sound power levels (LWAd) and declared average bystander position A-Weighted sound pressure levels (LpAm) when the product is operating in a 23°C ambient environment. Noise emissions were measured in accordance with ISO 7779 (ECMA 74) and declared in accordance with ISO 9296 (ECMA 109).	
		Idle	
		L WAd	7.7 B
		L pAm	58 dBA
		Operating	
		L WAd	7.7 B
		L pAm	58 dBA
	Emissions Classification (EMC)	FCC Rating	Class A
		Normative Standards	CISPR 22; EN55022; EN55024; FCC CFR 47, Pt 15; ICES-003; CNS13438; GB9254; K22;K24; EN 61000-3-2; EN 61000-3-3; EN 60950-1; IEC 60950-1
		NOTE: Product conformance to cited product specifications is based on sample (type) testing, evaluation, or assessment. This product or family of products is eligible to bear the appropriate compliance logos and statements.	
Slimline CD-RW/DVD-ROM 24X Combo Drive	Shipping Dimensions	13.88 x 11.38 x 9.25 in (35.26 x 28.91 x 23.50 cm)	
	Shipping Weight	5 lb (2.27 kg)	
	Disk	Applicable Disk	DVD-ROM DVD-R (Read Only) 2.6 GB/side DVD-RAM (Read Only) 5.2 GB/side DVD-RAM (Read Only) CD-ROM Mode-1 data disc CD-ROM Mode-2 data disc CD Audio disc CD-Extra CD-RW CD-R CD Text PhotoCD CD-I (mode 2) CD-I Ready CD-Bridge

	Capacity	DVD-ROM	DVD-SL	4.7 GB/side
			DVD-DL	8.5 GB/side
			Double Sided	9.40 GB/side
		DVD-R		3.95 GB/side
		DVD-RAM		2.6 GB/side and 5.2 GB/
		CD-ROM	Mode-1	650 MB (550 MB)
			Mode-2	742 MB (640 MB)
	Block Size	DVD		2,048 bytes
		CD		2,352 (Mode-0)
				2352, 2340, 2336, 2048 bytes (Mode-1)
				2352, 2340, 2336, 2048 bytes (Mode-2)
	Diameter	120 mm, 80 mm (with adapter at vertical mounting mode)		
Loading Mechanism	Tray type			
Interface	EIDE (ATAPI)			
Access Times (typical)	Random	DVD-ROM < 120 ms, CD-ROM < 110 ms		
	Full-Stroke	DVD-ROM < 240 ms, CD-ROM < 160 ms		
Audio Output Level (typical)	Line-out	CD 0.7 Vrms at 47 Kohms Load		
Data Transfer Rate (sustained)	DVD-ROM	Single Layer		10.8 MB/sec. Max.
	DVD-RAM	2.77 MB/sec. Max		
	CD-ROM	7.2 MB/sec. Max.		
Cache Buffer	2 MB			
Spin-up Time (typical)	less than 10 seconds			
MTBF	120,000 Power On Hours (POH)			
Ambient Temperature	Operating	-22° to 140° F (-30° to 60° C)		
Relative Humidity	Operating	10% to 80%		
	Storage/Transportation	5% to 95%		
Dimensions	(HxWxD, maximum)	0.5 x 5.04 x 5.1 in (12.7 x 128 x 129.4 mm)		
Option Kit Contents	DVD-ROM drive with installation guide, warranty card, registration card			

Integrated Lights-Out 2 Standard (integrated on system board)	**Architecture**	32-bit PCI-based health and remote management ASIC (Application Specific Integrated Circuit)
	Processor	32-bit RISC processor core running at 66 MHz
	Upgradeability	Option firmware upgradeable via flash ROM

Video Support	Utilizes the host server's embedded video chip. Supports VGA/SVGA, 640 x 480 (256 to 16.7M colors), 800 x 600 (256 to 16.7M colors), 1024 x 768 (256 to 65K colors), 1280 x 1024 (256 colors)
Interfaces	One Ethernet network connection (10/100 Mb/s)
Memory	2-MB Flash ROM 8-MB SDRAM
Operating System and Virtualization Software Support	Microsoft Windows Server Windows Server 2008 Hyper-V Red Hat Enterprise Linux (RHEL) SUSE Linux Enterprise Server (SLES) Oracle Enterprise Linux (OEL) Solaris 10 for x86/x64 based systems VMware XenSource NOTE: For more information on HP's Certified and Support Operating System & Virtualization Software, visit our Support Matrix at: www.hp.com/go/ossupport For our driver download page: www.hp.com/support/DL585G6
Client Browser Support	Microsoft Internet Explorer 7 Microsoft Internet Explorer 6 Firefox 3.5 (on supported Windows and Linux systems) Firefox 3.0 (on supported Windows and Linux systems)
iLO 2 Standard Features	Virtual Text Remote Console Virtual KVM Virtual Power Button Control Virtual UID Control Power Regulator Control Dedicated LAN Connectivity Secure access using web browser Secure access using Secure Shell (SSH) client Serial connectivity Automatic IP Configuration via DHCP/DNS/WINS Industry Standard 128-bit Secure Sockets Layer (SSL) Security IML and iLO2 Event Logging Support for up to 12 user accounts with customizable access privileges
iLO Advanced Features (optional Advanced licensed purchase)	Virtual Graphical Remote Console Virtual Floppy/USB Key drive Virtual CD-ROM drive Directory Services Integration Processor States Reporting Terminal Services Integration

NOTE: For more information on how to purchase the HP iLO Advanced optional licensed features, visit the iLO QuickSpecs located: www.hp.com/go/iLO

Smart Array P410 Controller	Disk Drive and Enclosure Interface - Transfer rate	6Gb/s SAS (Serial Attached SCSI) 3Gb/s SATA (Serial ATA)
	SAS Connectors	2 internal (Mini-SAS) x8 wide port connectors
	Cache Memory Speed	DDR2-800MHz with 40 or 72-bit wide bus provides up to 4.2 GB/s maximum bandwidth.
	Server Interface	x8 5G PCIe 2.0 provides 4GB/s maximum bandwidth.
	SAS Speed	x8 3G SAS provides 2.4GB/s maximum bandwidth.
	Cache Memory	40-bit 256MB ECC protected cache (72-bit 512MB BBWC module upgrades available); transportable with battery-backed upgrade
	Logical Drives Supported	Up to 64 logical drives
	Maximum Logical Drive Capacity	Greater than 2TB
	Host Memory Addressing	64-bit, supporting greater than 4GB server memory space
	RAID Support	RAID 6, 6+0 (Advanced Data Guarding) NOTE: The minimum of 256 MB cache, battery kit, and Smart Array Advanced Pack License Key upgrade is required to enable RAID 6, 6+0 RAID 5, 5+0 (Distributed Data Guarding) NOTE: The 256 MB is required to enable RAID 5, 5+0 support of the Smart Array P410i RAID 1+0 (Striping & Mirroring) RAID 0 (Striping)

Two embedded NC371i Multifunction Gigabit Server Adapters	Network Interface	10/100/1000-T	
	Compatibility	IEEE 802.3 10Base-T	
		IEEE 802.3ab 1000Base-T	
		IEEE 802.3u 100Base-TX	
	Data Transfer Method	PCI Express, four lanes (x4)	
	Controller	BCM5706	
	Network Transfer Rate	10Base-T (Half-Duplex)	10 Mb/s
		10Base-T (Full-Duplex)	20 Mb/s
		100Base-TX (Half-Duplex)	100 Mb/s
		100Base-TX (Full-Duplex)	200 Mb/s
		1000Base-TX (Half and Full-Duplex)	2000 Mb/s
	Connector	RJ-45	
	Cable Support	10Base-T	Categories 3, 4, or 5 UTP; up to 328 ft (100 m)
		10/100/1000 Base-TX	Category 5 UTP up to 328 ft (100 m)

Environment-friendly Products and Approach	End-of-life Management and Recycling	Hewlett-Packard offers end-of-life HP product return, trade-in, and recycling programs in many geographic areas. For trade-in information, please go to: http://www.hp.com/go/green. To recycle your product, please go to: http://www.hp.com/go/green or contact your nearest HP sales office. Products returned to HP will be recycled, recovered or disposed of in a responsible manner. The EU WEEE directive (2002/95/EC) requires manufacturers to provide treatment information for each product type for use by treatment facilities. This information (product disassembly instructions) is posted on the Hewlett Packard web site at: http://www.hp.com/go/green. These instructions may be used by recyclers and other WEEE treatment facilities as well as HP OEM customers who integrate and re-sell HP equipment.

© Copyright 2011 Hewlett-Packard Development Company, L.P.

The information contained herein is subject to change without notice.
Microsoft and Windows are US registered trademarks of Microsoft Corporation.
AMD, the AMD Arrow logo, AMD Opteron™, and combinations thereof, are trademarks of Advanced Micro Devices, Inc.
Unix is a registered trademark of The Open Group.

The only warranties for HP products and services are set forth in the express warranty statements accompanying such products and services. Nothing herein should be construed as constituting an additional warranty. HP shall not be liable for technical or editorial errors or omissions contained herein.

For hard drives, 1GB = 1 billion bytes. Actual formatted capacity is less.