RETIRED: This document has been officially retired, and the base products listed herein are now considered obsolete and are no longer available for sale. Consequently, the information contained within may no longer be current. This document is provided exclusively for reference and informational purposes.

Overview

HP ProLiant ML350p Generation 8 (Gen8)

The HP ProLiant ML350p Gen8 Server series is the latest generation of the best-selling ProLiant ML servers delivering best-in-class performance, availability and maximum expandability for enterprise data centers, remote branch offices and growing businesses. Incorporating key HP technologies from the HP ProActive Insight architecture, the ML350p Gen8 provides innovations in memory, server management, firmware management and server storage. It combines these innovations with the latest Intel® Xeon® processors for a system with unsurpassed flexibility and performance.

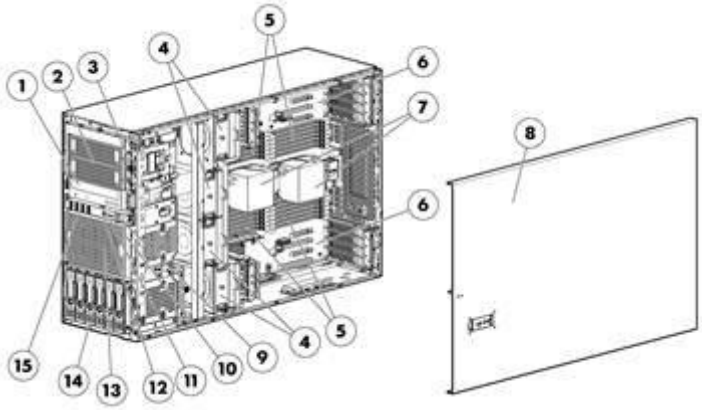

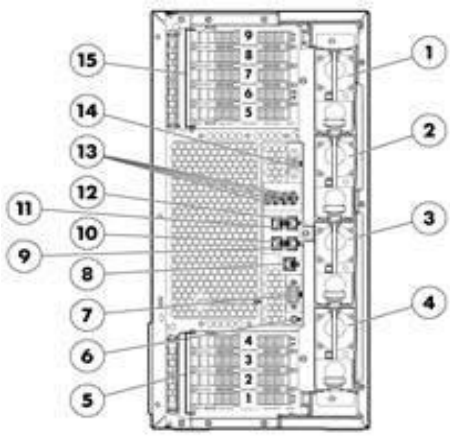

Front View:

1. Half height SATA DVD ROM or DVD RW optical drive
2. Two (2) removable media bays
3. Systems Insight Display (rack and CTO models only)
4. Four (4) system fans
5. Twenty-four (24) DIMM slots: DDR3 Load Reduced (LRDIMM), Registered (RDIMM) or Unbuffered (UDIMM)
6. Nine (9) PCIe expansion slots (8 PCIe 3.0 and 1 PCIe 2.0)
7. Two (2) processor heatsinks
8. Quick removal access panel
9. Power On / Standby button and system power LED button
10. NIC Activity LED
11. Health LED
12. UID LED button
13. Optional drive cage
14. Standard drive cage (6 LFF or 8 SFF)
15. Four (4) USB connectors

Rear View:

1. Power supply 1(CTO)
2. Power supply 2(CTO)
3. Power supply 3 (Default)
4. Power supply 4 (Default)
5. Four (4) PCIe slots (for processor 1)
6. UID LED button
7. Serial connector
8. iLO connector
9. NIC connector 4
10. NIC connector 3
11. NIC connector 2
12. NIC connector 1
13. Four (4) USB connectors
14. Video connector
15. Five (5) PCIe slots (for processor 2)

What's New

- New HDD offering.

Standard Features

NOTE: For the Standard Features shipped in the "Factory Integrated Models", please see the "Configuration Information - Factory Integrated Models" section.

Processor
One of the following depending on Model

E5-2600 v2 series Processors

Entry Processors
NOTE: All support up to 1333MHz DDR3 memory speeds.

Intel® Xeon® E5-2609 v2 (2.5GHz/4-core/10MB/6.4GT-s QPI/80W)

Intel® Xeon® E5-2603 v2 (1.8GHz/4-core/10MB/6.4GT-s QPI/80W)

Base Processors
NOTE: All support up to1600MHz DDR3 memory speeds.

Intel® Xeon® E5-2640 v2 (2.0GHz/8-core/20MB/7.2GT-s QPI/95W, DDR3-1600, HT, Turbo2- 3/3/3/3/3/3/4/5)

Intel® Xeon® E5-2630 v2 (2.6GHz/6-core/15MB/7.2GT-s QPI/80W, DDR3-1600, HT, Turbo2- 3/3/3/3/4/5)

Intel® Xeon® E5-2620 v2 (2.1GHz/6-core/15MB/7.2GT-s QPI/80W, DDR3-1600, HT, Turbo2- 3/3/3/3/4/5)

Intel® Xeon® E5-2630L v2 (2.4GHz/6-core/15MB/7.2GT-s QPI/60W, DDR3-1600, HT, Turbo2- 2/2/2/2/3/4)

Performance Processors
NOTE: All support up to 1866MHz DDR3 memory speeds.

Intel® Xeon® E5-2697 v2 (2.7GHz/12-core/30MB/8.0GT-s QPI/130W, DDR3-1866, HT, Turbo2- 3/3/3/3/3/3/3/4/5/6/7/8)

Intel® Xeon® E5-2690 v2 (3.0GHz/10-core/25MB/8.0GT-s QPI/130W, DDR3-1866, HT, Turbo2- 3/3/3/3/3/3/3/4/5/6)

Intel® Xeon® E5-2680 v2 (2.8GHz/10-core/25MB/8.0GT-s QPI/115W, DDR3-1866, HT, Turbo2- 3/3/3/3/3/4/5/6/7/8)

Intel® Xeon® E5-2670 v2 (2.5GHz/10-core/25MB/8.0GT-s QPI/115W, DDR3-1866, HT, Turbo2- 4/4/4/4/4/4/5/6/7/8)

Intel® Xeon® E5-2667 v2 (3.3GHz/8-core/25MB/8.0GT-s QPI/130W, DDR3-1866, HT, Turbo2- 3/3/3/3/4/5/6/7)

Intel® Xeon® E5-2650 v2 (2.6GHz/8-core/20MB/8.0GT-s QPI/95W, DDR3-1866, HT, Turbo2- 4/4/4/4/5/6/7/8)

Intel® Xeon® E5-2643 v2 (3.5GHz/6-core/25MB/8.0GT-s QPI/130W, DDR3-1866, HT, Turbo2- 1/1/1/1/2/3)

Intel® Xeon® E5-2637 v2 (3.5GHz/4-core/15MB/8.0GT-s QPI/130W, DDR3-1866, HT, Turbo2- 1/1/2/3)

E5-2600 series Processors

Entry Processors
NOTE: All support up to 1066MHz DDR3 memory speeds.

Intel® Xeon® E5-2609 (2.4GHz/4-core/10MB/6.4GT-s QPI/80W)

Intel® Xeon® E5-2603 (1.8GHz/4-core/10MB/6.4GT-s QPI/80W)

Base Processors
NOTE: All support up to1333MHz DDR3 memory speeds.

Intel® Xeon® E5-2640 (2.5GHz/6-core/15MB/7.2GT-s QPI/95W, DDR3-1333, HT, Turbo2- 3/3/4/4/5/5)

Intel® Xeon® E5-2630 (2.3GHz/6-core/15MB/7.2GT-s QPI/95W, DDR3-1333, HT, Turbo2- 3/3/4/4/5/5)

Intel® Xeon® E5-2620 (2.0GHz/6-core/15MB/7.2GT-s QPI/95W, DDR3-1333, HT, Turbo2- 3/3/4/4/5/5)

Intel® Xeon® E5-2630L (2.0GHz/6-core/15MB/8.0GT-s QPI/60W, DDR3-1333, HT, Turbo2- 3/3/4/4/5/5)

Performance Processors

Standard Features

	NOTE: All support up to 1600MHz DDR3 memory speeds. Intel® Xeon® E5-2690 (2.9GHz/8-core/20MB/8.0GT-s QPI/135W, DDR3-1600, HT, Turbo2- 4/4/4/5/5/7/7/9) Intel® Xeon® E5-2680 (2.7GHz/8-core/20MB/8.0GT-s QPI/130W, DDR3-1600, HT, Turbo2- 4/4/5/5/5/7/8/8) Intel® Xeon® E5-2670 (2.6GHz/8-core/20MB/8.0GT-s QPI/115W, DDR3-1600, HT, Turbo2- 4/4/5/5/6/6/7/7) Intel® Xeon® E5-2667 (2.9GHz/6-core/15MB/8.0GT-s QPI/130W, DDR3-1600, HT, Turbo2- 3/3/3/4/5/6) Intel® Xeon® E5-2665 (2.4GHz/8-core/20MB/8.0GT-s QPI/115W, DDR3-1600, HT, Turbo2- 4/4/5/5/6/6/7/7) Intel® Xeon® E5-2660 (2.2GHz/8-core/20MB/8.0GT-s QPI/95W, DDR3-1600, HT, Turbo2- 5/5/6/6/7/7/8/8) Intel® Xeon® E5-2650 (2.0GHz/8-core/20MB/8.0GT-s QPI/95W, DDR3-1600, HT, Turbo2- 4/4/5/5/5/7/8/8) Intel® Xeon® E5-2650L (1.8GHz/8-core/20MB/8.0GT-s QPI/70W, DDR3-1600, HT, Turbo2- 2/2/3/3/4/4/5/5) Intel® Xeon® E5-2643 (3.3GHz/4-core/10MB/8.0GT-s QPI/130W, DDR3-1600, HT, Turbo2- 1/1/2/2) Intel® Xeon® E5-2637 (3.0GHz/2-core/5MB/8.0GT-s QPI/80W, DDR3-1600, HT, Turbo2- 5/5) **NOTE:** HT indicates that the processor model supports Intel® Hyper-Threading Technology. **NOTE:** Turbo indicates the maximum potential frequency increment when using Intel® Turbo Boost Technology, with 8, 7, 6, 5, 4, 3, 2 or 1 core(s) active. **NOTE:** DDR3 speed is the maximum memory speed of the processor. Actual memory speed may depend on the quantity and type of DIMMs installed. **NOTE:** Up to 2 processors supported. Mixing different processor models is not supported. **NOTE:** For the Intel® C600 Chipset E5-2600 Series, the letter preceding the model number indicates the Product Line (E3, E5, E7); 2600x, 2 = number of CPUs in a Node, 6 is socket/segment designation, 00 = Processor SKU, and x = L for low power SKUs.
Cache Memory One of the following depending on Model	30MB (1 x 30MB) Level 3 **NOTE:** For Twelve-core processors. 25MB (1 x 25MB) Level 3 **NOTE:** For Ten-core processors. 20MB (1 x 20MB) Level 3 **NOTE:** For Eight-core processors. 15MB (1 x 15MB) Level 3 **NOTE:** For Six-core processors. 10MB (1 x 10MB) Level 3 **NOTE:** For Quad-core processors. 5MB (1 x 5MB) Level 3 **NOTE:** For Dual-Core processors.
Chipset	Intel® C600 Chipset Intel® E5-2600 Processor Family Intel® E5-2600v2 Processor Family **NOTE:** For more information regarding Intel® chipsets, please see the following URL: http://www.intel.com/products/server/chipsets/.
Upgradeability	Upgradeable to two processors **NOTE:** Total 4, 8, 12 ,16, 20 or 24 cores

Standard Features

NOTE: Processor upgrade available from Intel® Xeon® Processors E5-2600 to E5-2600 v2. Please contact HP Technology Sales (http://www.hp.com/support), your local HP Re-seller, or reference the following Customer Advisory: ProLiant Servers-Instructions for Upgrading an HP ProLiant Gen8 Server from an Intel Xeon Processor E5-2600 to an Intel Xeon Processor E5-2600 v2, regarding critical details before upgrading. An explanation of requirements and limitations are provided.
NOTE: Customers who use ML350p Gen8 sandy bridge processors need to purchase Heatsink lever upgrade kit 749245-B21 when plan to upgrade to Ivy bridge processor

Up to 24 DIMM slots available for higher memory capacity

Up to 24 SFF Hard Drive Bays; Or 18 LFF Hard Drive Bays

8 PCIe 3.0 and 1 PCIe 2.0 I/O slots for additional communications and storage expansion

Redundant Power Supply and Redundant Fans

Optical Drive Bay (up to 3)

On System Management Chipset

HP iLO (Firmware: HP iLO4)
NOTE: For more information, visit: http://www.hp.com/go/ilo

Memory Protection

Advanced ECC
Online Spare
Lock-step mode

Memory

Type	HP SmartMemory DDR3 Load Reduced (LRDIMM), Registered (RDIMM) or Unbuffered (UDIMM)
DIMM Slots Available	24
Maximum Capacity (LRIDMM)	768GB (24 x 32GB LRDIMM @1866MHz)
Maximum Capacity (RDIMM)	384GB (24x 16GB RDIMM @1866MHz)
Maximum Capacity (UDIMM)	128GB (16 x 8GB UDIMM @1866MHz)

NOTE: HP memory from previous generation servers are not qualified or warranted with this HP ProLiant Server. HP SmartMemory is required to realize the memory performance improvements and enhanced functionality listed in this document for Gen8. For additional information, please see the HP SmartMemory QuickSpecs at:
http://h18000.www1.hp.com/products/quickspecs/14225_na/14225_na.html
NOTE: LRDIMM, RDIMM and UDIMMs are all distinct memory technologies and cannot be mixed within a server. The majority of ProLiant Gen8 servers support RDIMM, UDIMM and LRDIMM.
NOTE: If only one processor is installed, only 12 DIMM slots are available. When populating with two processors 24 DIMM slots are available. For maximum speed on some memory options on 16 DIMM slots may be populated.
NOTE: Depending on the memory configuration and processor model, the memory speed may run at 1866MHz, 1600MHz, 1333MHz, or 1066MHz. Please see Memory Population Table or the Online Memory Configuration Tool at: http://www.hp.com/go/ddr3memory-configurator.

Network Controller

HP 1Gb Ethernet 4-port 331i Adapter

Expansion Slots

Expansion Slot #	Technology	Bus Width	Connector Width	Bus Number	Form Factor	Notes
9	PCIe 3.0	x4	x8	32	Full Length/Full Height	For processor 2

Standard Features

8	PCIe 3.0	x16	x16	32	Full Length/Full Height	For processor 2
7	PCIe 3.0	x4	x8	32	Full Length/Full Height	For processor 2
6	PCIe 3.0	x16	x16	32	Full Length/Full Height	For processor 2
5	PCIe 2.0	x4	x8	0	Half Length/Full Height	For processor 2
4	PCIe 3.0	x4	x8	0	Full Length/Full Height	For processor 1
3	PCIe 3.0	x16	x16	0	Full Length/Full Height	For processor 1
2	PCIe 3.0	x4	x8	0	Full Length/Full Height	For processor 1
1	PCIe 3.0	x8	x16	0	Full Length/Full Height	For processor 1

NOTE: Bus number - Default bus assignment (in decimal). Inserting cards with PCI bridges may alter the actual bus assignment number.
NOTE: Nine total expansion slots. Three PCIe 3.0 x16 (x16 speed); One PCIe 3.0 x16 (x8 speed); Four PCIe 3.0 x8 (x4 speed); One PCIe 2.0 x8 (x4 speed).

HP Server ROM

HP ROM (Read Only Memory) is now digitally signed using HP's Corporate Signing Service. This signature is verified before the flash process starts, reducing accidental programming and preventing malicious efforts to corrupt system ROM.

HP ROM provides for essential initialization and validation of hardware components before control is passed to the customer-installed operating system. The ROM also provides the capability of booting from various fixed media (HDD, CD-ROM) and removable media (USB), to continue operation to the operating system.

HP ROM performs very early configuration of the video controller, to allow monitoring of initialization progress via an attached monitor. If configuration or hardware errors are discovered during this early phase of hardware initialization, suitable messages are now displayed on the connected monitor. Additionally, these configuration or hardware errors are logged to the Integrated Management Log (IML) to assist in diagnosis.

HP's ProLiant ROM is used to configure the following:

- Processor and chipset status registers
- System memory, memory map, and memory initialization
- System hardware configuration (Integrated PCI devices and optional PCIe cards).
- Customer-specific BIOS configuration (using the HP ROM-Based Setup Utility (RBSU).

NOTE: For further information, please refer to HP's RBSU (ROM based setup utility) user guide:

Standard Features

	www.hp.com/support/rbsu.		
Storage Controller One of the following depending on model	Entry Models	HP Smart Array P420i/Zero Memory Controller	
	Base Models	HP Smart Array P420i/512M FBWC Controller (RAID 0/1/1+0/5/5+0/6/6+0) **NOTE:** The SA-P420i/512M FBWC is standard on tower model and SA-P420i/1G FBWC is standard on rack model.	
		HP Smart Array P420i/1G FBWC Controller (RAID 0/1/1+0/5/5+0/6/6+0)	
	Performance Models	HP Smart Array P420i/2G FBWC Controller (RAID 0/1/1+0/5/5+0/6/6+0)	
Internal Storage Devices	**Optical Drives** One of the following depending on model	HP Half-Height SATA DVD-ROM Optical Drive **NOTE:** DVD ROM is standard in entry and base tower models.	
		HP Half Height SATA DVD-RW Optical Drive **NOTE:** DVD-RW is standard in performance tower and all rack models.	
	Hard Drives	None ship standard	
	Hard Drive Bays One of the following depending on model	(6) Hot plug LFF SAS/SATA HDD bays; upgradable to (18)	
		(8) Hot plug SFF SAS/SATA HDD bays; upgradable to (24)	
		NOTE: All Pre-configured Models come populated with some hard drive blanks installed. Should the customer need additional hard drive blanks, they can order more using either P/N 666987-B21: HP SFF Gen8 Hard Drive Blank Kit or P/N 666986-B21: HP LFF Gen8 Hard Drive Blank Kit. These part numbers for single HDD blanks below are also provided should the customer require replacement HDD blanks for their server.	
Maximum Internal Storage One of the following depending on model	Hot Plug LFF SAS	72TB	18 x 4TB
	Hot Plug LFF SATA	72TB	18 x 4TB
	Hot Plug SFF SAS	28.8TB	24 x 1.2TB
	Hot Plug SFF SATA	24TB	24 x 1TB
	Hot Plug SFF SATA SSD	9.6TB	24 x 400GB
	Hot Plug SFF SAS SSD	19.2TB	24 x 800GB
	Hot Plug LFF SATA SSD	7.2TB	18 x 400GB
Interfaces	Serial	1	
	Video	1 (rear)	
	Network RJ-45 (Ethernet)	5 (1 dedicated for HP Integrated Lights-Out)	
	HP iLO Remote Management Network Port	1 Gb Dedicated	
	SD slot	1 (internal) **NOTE:** The SD slot is not a hot-pluggable device. Customers should not attempt to plug an SD card into the SD slot while the server is powered.	
	USB	9 (4 front, 4 rear, 1 internal)	
Industry Standard Compliance	ACPI 2.0b Compliant		
	PCIe 3.0 Compliant		
	PXE Support		
	WOL Support		
	Novell Certified		
	IPMI 2.0, SMASH CLP, DCMI 1.0 compliant		

Standard Features

Microsoft® Logo certifications
USB 2.0 Support
SMBIOS 2.7.1

Server Power Cords

ProLiant ML servers in a rack-mount configuration no longer ship standard with NEMA power cords that allow connection to 110V US wall outlets in a home or office. These servers are primarily connected to PDU's in data center racks so they now ship standard with only a PDU power cord (416151-B21). If a user wishes to power a ProLiant ML rack-mount server using a 110V receptacle (NEMA-15), the NEMA power cord must be ordered separately. The 12' cord (AF556A) or 6' cord (187335-001) can be purchased online at HP.COM. In a tower configuration, the servers ship standard with a 6' NEMA power cord. If customers require a power cord, they can check the power cord matrix for the appropriate sku. Please see the following power cord matrix: http://www.hp.com/go/powercordmatrix.

Power Specifications

To review typical system power ratings use the HP Power Advisor which is available via the online tool located at URL: http://www.hp.com/go/proliant-energy-efficient or www.hp.com/go/hppoweradvisor.

NOTE: Power Specification and Technical Content for supported power supplies can be found at: http://h18000.www1.hp.com/products/quickspecs/14209_na/14209_na.html

Common Slot Power Supplies

NOTE: Mixing of power supplies in the same server is not supported. All power supplies inside a server must be exactly the same model. Mixing Gold, Platinum, and Platinum Plus certified power supplies is not supported.

HP's Common Slot (CS) power supplies allow for commonality of power supplies across a wide range of ProLiant and Integrity servers, as well as HP Storage solutions, and are designed to provide the highest power supply efficiency without degrading system performance. HP CS power supplies are tested by the Electric Power Research Institute (EPRI) and certified through the ECOS 80 Plus power supply program. HP CS power supply options provide efficiency ratings of up to 94% (80 Plus Platinum) and are available in three power output options – 460W, 750W, and 1200W - allowing the customer to "right-size" a power supply for their specific server configuration. All HP Common Slot power sources are UL, CE Mark Compliant, hot-plug and support redundant configurations.

NOTE: Mixing of power supplies in the same server is not supported. All power supplies must be of the same output and efficiency rating. If non-matched power supplies are inserted you will get errors and operation will fail.

HP CS Platinum power supplies are required when enabling HP's Intelligent Power Discovery (IPD) solution. IPD is the first technology to create an automated, energy-aware network between IT systems and facilities. This allows your company to reclaim millions of dollars in wasted power capacity and downtime costs across data centers. For more information on HP's IPD solution, go to http://www.hp.com/go/ipd.
It is highly recommended that you use the HP Power Advisor in defining the "Right-Size" power supply for your needs. HP Power Advisor can be accessed at: www.hp.com/go/hppoweradvisor.
NOTE: The 80 PLUS program is a unique forum that unites electric utilities, the computer industry, and consumers in an effort to bring energy efficient technology solutions to the marketplace. 80 Plus independently tests power supply efficiency and publicly posts the results on 80Plus.org.

Redundant Power: Optional (1 + 1 redundant) power supplies can be purchased through power supply option kits (see Power Supplies for part numbers).

NOTE: Power Specification and Technical Content for supported power supplies can be found at: http://h18000.www1.hp.com/products/quickspecs/14209_na/14209_na.html

Standard Features

System Fans One of the following depending on Model	(4) hot plug, redundant fans plus louvers Fan Redundancy is standard in performance model. Four fans, PCIe baffles plus fan louvers are required for fan redundancy. (3) hot plug, non-redundant fans For fan redundancy in entry and base models, the HP Hot Plug Redundant Fan Kit (659486-B21) must be purchased. HP Hot Plug Redundant Fan Kit includes 4th fan, PCIe baffles and fan louvers.
Operating Systems and Virtualization Software Support for ProLiant Servers	Microsoft Windows Server Canonical Ubuntu Red Hat Enterprise Linux (RHEL) SUSE Linux Enterprise Server (SLES) Solaris VMware Citrix XenServer **NOTE:** For more information on HP's Certified and Supported ProLiant Servers for OS and Virtualization Software and latest listing of software drivers available for your server, please visit our Support Matrix at: http://www.hp.com/go/ossupport and our driver download page http://www.hp.com/support/ML350pGen8
Graphics	Integrated Matrox G200 video standard • 1280 x 1024 (32 bpp) • 1920 x 1200 (16 bpp) HP iLO 4 On System Management Memory • 16 MB Flash • 256 MB DDR 3 with ECC (112 MB after ECC and video)
Form Factor	Tower or Rack (5U)

On System Management	HP iLO Management Engine	HP iLO Management Engine is a comprehensive set of embedded management features supporting the complete lifecycle of the server, from initial deployment, through ongoing management, to service alerting and remote support. HP iLO Management Engine comes standard on all HP ProLiant Gen8 servers. The HP iLO Management Engine portfolio includes: • **HP iLO**: The HP iLO (Integrated Lights-Out) management processor is the core foundation for the HP iLO Management Engine • **HP Agentless Management**: Provides built in server health monitoring and alerting capability without OS agents, that starts working the moment a power cord and an Ethernet cable are connected. • **HP Active Health System**: Always on, continuous monitoring for increased stability and shorter downtimes; 100% configuration history; Health and service alerts and easy export and upload to Service and Support. • **HP Intelligent Provisioning**: Lets customers provision and configure a single server without any separate media. No more

SmartStart CDs or Smart Update Firmware DVD are needed.
    - To start Intelligent Provisioning:
        - Press the F10 key during the ProLiant Gen8 server boot process (also known as power on self-test or POST).
        - Please go to the Intelligent Provisioning website at: http://www.hp.com/go/intelligentprovisioning for additional information and to view usage videos.
        - Use the Service Pack for ProLiant (SPP) at: www.hp.com/go/spp to get firmware and software updates.
- **HP iLO Mobile App**: Enables the ability to access, deploy, and manage your server anytime from anywhere from select smartphones and mobile devices. For additional information please visit: http://www.hp.com/go/ilo/mobileapp

NOTE: For more information, visit: http://www.hp.com/go/ilo or HP iLO Management Engine technologies whitepaper

HP Insight Management	HP Service Pack for ProLiant (SPP)	HP Service Pack for ProLiant (SPP) and HP Smart Update Manager (HP SUM) provide a comprehensive approach to firmware and system software maintenance. Together they provide better operating stability and ensure maximum uptime. The SPP will be updated at a predictable cadence, typically coinciding with new HP server hardware launches. By enabling firmware to be updated online and integrating firmware and system software updates in one operation, HP SUM and the SPP offer faster updates of individual servers and dramatically faster updates of entire BladeSystem enclosures. Further improving system uptime and stability is the fact that HP provides 12 months of support for each Service Pack for ProLiant release. The user experience around HP SUM and the SPP has been improved in several ways, starting with the web download. A single web page provides access to a single download containing both the latest version of HP SUM and the latest SPP. Optional smaller subsets with only specific types of servers or specific operating systems are offered to save on download time. The HP SUM application provides a straightforward, intuitive user interface that guides the user through the steps of discovery, analyses and update, providing comprehensive information on available updates, criticality and interdependencies. This information is also available in reports. By providing the option of multiple local or shared repositories which can be easily updated from hp.com, HP SUM provides the tools to optimize stability and consistency throughout the company. While HP SUM and the SPP recommend the combinations of firmware and system software that HP has found to be the best practice, the application gives customers the flexibility to set their own specific baseline. The Service Pack for ProLiant has been rigorously tested with specific attention for interaction between firmware, drivers and agents both within the server as well as in interaction with the BladeSystem enclosure components (Onboard Administrator and Virtual Connect). This testing ensures the highest quality as well as providing the input for HP SUM to deploy updates taking into account all interdependencies, when determining

Standard Features

	the correct updates and order of update deployment. **NOTE:** The Service Pack for ProLiant (which includes HP SUM) can be downloaded from http://www.hp.com/go/spp/download. More information can be found: http://www.hp.com/go/SmartUpdate, http://www.hp.com/go/spp and http://www.hp.com/go/hpsum
HP StoreVirtual VSA	HP StoreVirtual VSA allows you to create fully featured shared storage on a VMware vSphere or Microsoft Hyper-V virtualized server. This server model starting November 2013, includes a limited license for HP StoreVirtual VSA software with 1TB of capacity. To download the license key and StoreVirtual VSA software, visit: http://www.hp.com/go/unlockVSA. **NOTE:** You will need your server serial number in order to complete the registration form. Fully functional, capacity-based licenses are available in 4TB, 10TB, and 50TB sizes. For more information and access to the 60-day free trial, visit: www.hp.com/go/tryVSA
Security	Power-on password Setup password Serial interface control Power switch security Administrator's password
Warranty	This product is covered by a global limited warranty and supported by HP Services and a worldwide network of HP Authorized Channel Partners resellers. Hardware diagnostic support and repair is available for three years from date of purchase. Support for software and initial setup is available for 90 days from date of purchase. Enhancements to warranty services are available through HP Care Pack services or customized service agreements. Hard drives have either a one year or three year warranty; refer to the specific hard drive QuickSpecs for details. **NOTE:** Server Warranty includes 3-Year Parts, 3-Year Labor, 3-Year Onsite support with next business day response. Warranty repairs may be accomplished through the use of Customer Self Repair (CSR) parts. These parts fall into two categories: 1) Mandatory CSR parts are designed for easy replacement. A travel and labor charge will result when customers decline to replace a Mandatory CSR part; 2) Optional CSR parts are also designed for easy replacement but may involve added complexity. Customers may choose to have HP replace Optional CSR parts at no charge. Additional information regarding worldwide limited warranty and technical support is available at: http://h18004.www1.hp.com/products/servers/platforms/warranty/index.html

Optional Features

HP Insight Management	HP Insight Control	HP Insight Control, a product option, delivers essential infrastructure management that can help save time and money by making it easy to deploy, migrate, monitor, remote control, and optimize your IT infrastructure through a single, simple management console. HP Insight Control also supports Location and Power Discovery Services to automate many configuration, asset tracking, and power management tasks to speed implementation and prevent downtime. For more information, see http://www.hp.com/go/insightcontrol. HP Insight Control includes one year of 24 x 7 HP Software Technical Support and Update Service ensuring rapid access to HP support staff and proactive delivery of software updates. For more information about this service, see: http://www.hp.com/services/insight.
	HP iLO Advanced	HP Integrated Lights-Out Advanced License a product option, providing smart remote server management without compromise. iLO Advanced unlocks the full set of remote administration functionality for all HP ProLiant servers by activating the full Virtual Keyboard Video and Mouse remote console, multi-user collaboration, console record and replay, GUI-based and scripted virtual media and virtual folders, and enhanced security and power management functionality. For more information, see: http://www.hp.com/go/iloadvanced
	HP Matrix Operating Environment	The HP Matrix Operating Environment (Matrix OE) for ProLiant and Integrity servers is an integrated command center that helps you instantly adjust to dynamic business demands. This advanced infrastructure management software lets you reduce the cost of common data center tasks by up to 40 percent while keeping pace with your changing business. The HP Matrix OE includes the automated provisioning, optimization, and recovery management capabilities for HP CloudSystem Matrix, the ideal platform for private cloud and Infrastructure as a Service (IaaS). **NOTE:** For more information, visit: http://www.hp.com/go/matrixoe
High Performance Clusters	HP Cluster Platforms	HP Cluster Platforms are specifically engineered, factory-integrated large-scale ProLiant clusters optimized for High Performance Computing, with a choice of servers, networks and software. Operating system options include specially priced offerings for Red Hat Enterprise Linux and SUSE Linux Enterprise Server, as well as Microsoft Windows HPC Server. A Cluster Platform Configurator simplifies ordering. http://www.hp.com/go/clusters.
	HP HPC Interconnects	High Performance Computing (HPC) interconnect technologies are available for this server as part of the HP Cluster Platform portfolio. These high-speed InfiniBand and Gigabit interconnects are fully supported by HP when integrated within an HP cluster. Flexible, validated solutions can be defined with the help of configuration tools. http://www.hp.com/techservers/clusters/ucp/index.html
	HP Insight Cluster Management Utility	HP Insight Cluster Management Utility (CMU) is an HP-licensed and HP-supported suite of tools that are used for lifecycle management of hyperscale clusters of Linux ProLiant systems. CMU includes software for the centralized provisioning, management and monitoring of nodes. CMU makes the administration of clusters user friendly, efficient, and effective. http://www.hp.com/go/cmu
Storage Software	Whether you need to solve a specific data protection, archiving, or storage command and control	

challenge, or deliver on strategic consolidation, compliance, or continuity initiatives, look no further than HP storage software. Our storage software helps you reduce costs, simplify storage infrastructure, protect vital assets and respond faster to business opportunities.

Storage software that gets the job done:

- **Data Protection and Recovery Software**
  Whether you're a large enterprise or a smaller business, HP data protection and recovery software will cost-effectively protect you against disaster and ensure business continuity.
- **Data Archive and Migration Software**
  HP's storage software enables you to comply with data retention and retrieval requirements, improve application performance, and reduce costs by efficiently migrating infrequently accessed or less valuable data to lower cost storage.
- **Storage Resource Management Software (SRM)**
  HP's storage resource management software reduces operational costs and provides the command and control foundation you need to efficiently manage and visualize your physical and virtual environments.
- **Data Replication Software**
  HP offers array-based and host-based replication software for use in disaster recovery, testing, application development and reporting.
- **Storage Device Management Software**
  Maximize your investment in HP storage and networking with software that enables hardware-specific configuration, performance tuning and connectivity management.
- **HP StoreVirtual VSA**
  With HP StoreVirtual VSA you can use the power of virtualization to turn a set of heterogeneous and disconnected physical disk drives in your servers and storage devices into a single pool of logical storage capacity.

NOTE: For more information available Storage Software including QuickSpecs, please see: http://www.hp.com/go/storage/software.

HP Insight Online	HP Insight Online is a new addition to the HP Support Center for one stop, secure access to product and HP support information personalized to your IT environment. Insight Online can automatically display devices remotely monitored by HP Insight Remote Support. With Insight Online's easy navigation you can efficiently track your IT support contracts and device status from anywhere and at any time. www.hp.com/go/insightonline
HP Proactive Insight experience	Prevent problems with innovative, automated monitoring tools and proactive services. The HP Proactive Insight experience consists of using Insight Online, Insight Remote Support, and Proactive Care Support Service as one integrated solution. The Proactive Insight experience provides you with expert advice and personalized, cloud-based automated IT support, helping to prevent unplanned down time and solve problems quickly. For more information, visit: http://www.hp.com/go/proactiveinsightexperience
Factory Express Portfolio for Servers and Storage	HP Factory Express offers configuration, customization, integration and deployment services for HP servers and storage products. Customers can choose how their factory solutions are built, tested, integrated, shipped and deployed. Factory Express offers service packages for simple configuration, racking, installation, complex configuration and design services as well as individual factory services, such as image loading, asset tagging, and custom packaging. HP products supported through Factory Express include a wide array of servers and storage: HP Integrity, HP ProLiant, HP ProLiant Server Blades, HP BladeSystem, HP 9000 servers as well as the MSAxxxx, VA7xxx, EVA, XP, rackable tape libraries and configurable network switches.

Optional Features

	For more information on Factory Express services for your specific server model please contact your sales representative or go to: http://www.hp.com/go/factory-express
HP Simple Configurator	SCE is a guided self-service tool to help sales and non-technical people provide customers with initial configurations in 3 to 5 minutes. You may then send the configuration on for configuration help, or use in your existing ordering processes. If you require "custom" rack configuration or configuration for products not available in SCE, please contact HP's Customer Business Center or an Authorized Partner for assistance. http://www.hp.com/products/configurator
HP Computation and Graphics Accelerators	Each ML350p server will accommodate up to three NVIDIA Quadro and Tesla GPU PCIe cards for high-end QUADRO® graphics and accelerated high performance computing.

Service and Support

Service and Support	**HP Technology Services for Industry Standard Servers** HP Technology Services delivers confidence, reduces risk and helps customers realize agility and stability. Connect to HP to help prevent problems and solve issues faster. Our support technology lets you to tap into the knowledge of millions of devices and thousands of experts to stay informed and in control, anywhere, any time. **Protect your business beyond warranty with HP Care Pack Services** HP Care Pack Services enable you to order the right service level, length of coverage and response time as you purchase your new server, giving you full entitlement for the term you select.
Optimized Care	**Supports maintaining servers at optimum performance availability** **HP Proactive Care with 6 hour call-to-repair commitment, three year Care Pack Service** HP Proactive Care helps prevent problems and stabilize IT by utilizing secure, real-time, predictive analytics and proactive consultations when your products are connected to HP. This Care Pack Service combines three years' proactive reporting and advice with our highest level reactive coverage and enhanced escalation management, HP's 24x7, six hour call-to-repair hardware commitment. HP is the only leading manufacturer who makes this level of coverage available as a standard service offering for your most valuable servers. Service includes 24x7 collaborative software support for leading industry standard software running on your HP ProLiant server. http://h20195.www2.hp.com/v2/GetPDF.aspx/4AA3-8855ENW.pdf
Standard Care	**Service recommendation that maintains high level of server availability** **HP Proactive Care with 24x7 coverage, three year Care Pack Service** HP Proactive Care helps prevent problems and stabilize IT by utilizing secure, real-time, predictive analytics and proactive consultations when your products are connected to HP. This Care Pack Service combines three years' proactive reporting and advice with our 24x7 coverage and enhanced escalation management, four hour hardware response time and two hour call back for software questions on leading industry standard software running on your HP ProLiant server. http://h20195.www2.hp.com/v2/GetPDF.aspx/4AA3-8855ENW.pdf
Related Services	**HP ProLiant Server Hardware Installation** Provides for the basic hardware installation of HP branded servers, storage devices and networking options to assist you in bringing your new hardware into operation in a timely and professional manner. http://h20195.www2.hp.com/V2/GetPDF.aspx/5981-9356EN.pdf **Factory Express for Servers and storage** HP Factory Express offers configuration, customization, integration and deployment services for HP servers and storage products. Customers can choose how their factory solutions are built, tested, integrated, shipped and deployed. For more information on Factory Express services for your specific server model please contact your sales representative or go to: http://www.hp.com/go/factory-express **Data Privacy Services** Protect your data through better media management. HP Data privacy services help manage and protect sensitive data to reduce the risk of unauthorized access to private information and help meet compliance requirements. Our retention services allow you to keep drives and other devices upon failure, our removal services provide convenient data sanitization and our recovery services allow you to safely retire IT assets and capture any remaining value from the hardware. http://www.hp.com/services/dataprivacy

Service and Support

	Additional HP Care Pack services can be found at: http://www.hp.com/go/cpc
Get connected to HP to improve your support experience	Prevent problems with innovative, automated monitoring tools and proactive services. Combining Proactive Care Services with our remote support technology such as Insight Online provides you with expert advice and personalized, cloud-based automated IT support, helping to prevent unplanned down time and solve problems quickly. For more information, visit: http://www.hp.com/go/proactiveinsightexperience
Parts and Material	HP will provide HP-supported replacement parts and materials necessary to maintain the covered hardware product in operating condition, including parts and materials for available and recommended engineering improvements. Parts and components that have reached their maximum supported lifetime and/or the maximum usage limitations as set forth in the manufacturer's operating manual, product quick-specs, or the technical product data sheet will not be provided, repaired, or replaced as part of these services. The defective media retention service feature option applies only to Disk or eligible SSD/Flash Drives replaced by HP due to malfunction.
For more information	To learn more on HP ProLiant servers, please contact your HP sales representative or HP Authorized ServiceOne Channel Partner. Or visit: http://www.hp.com/services/proliant

Pre-configured Models

NOTE: For the Standard Features shipped in the "Factory Integrated Models", please see the "Configuration Information - Factory Integrated Models" section.
NOTE: Pre-configured models ship with the configurations below. Options can be selected from the Core or Additional options section of this QuickSpecs.
NOTE: HP does not allow factory integration of options into pre-configured models. Any additional options purchased will be shipped separately.
NOTE: If you desire a custom configuration please see "Configuration Information - Factory Integrated Models" section of this QuickSpecs.
NOTE: All Pre-configured Models come populated with some hard drive blanks installed. Should the customer need additional hard drive blanks, they can order more using either P/N 666987-B21: HP SFF Gen8 Hard Drive Blank Kit or P/N 666986-B21: HP LFF Gen8 Hard Drive Blank Kit.

Entry Models

E5-2600 v2 series Processors

HP ProLiant ML350p Gen8 E5-2609v2 1P 4GB-R P420i/ZM 6 LFF 460W PS Server 736947-001	**Processor**	(1) Intel® Xeon® E5-2609 v2 (2.50GHz/4-core/10MB/6.4GT-s QPI/80W) Processor
	Cache Memory	10MB (1 x 10MB) L3
	Memory	4GB (1x4GB) PC3L-12800R (DDR3-1600LV) Registered DIMMS **NOTE:** 11 DIMM slots available (23 if second processor is purchased).
	Network Controller	HP 1Gb Ethernet 4-port 331i Adapter
	Storage Controller	HP Smart Array P420i/Zero Memory Controller
	Hard Drive	None ship standard; includes 5 LFF hard drive blanks
	Internal Storage	(6) Hot plug LFF SAS/SATA HDD bays; upgradable to (18)
	Optical Drive	HP Half-Height SATA DVD-ROM Optical Drive
	Power Supply	(1) HP 460W Common Slot Gold Hot Plug Power Supply
	Fans	3 hot plug, non-redundant fans
	Accessories	USB Keyboard and Mouse ship standard
	Management	HP iLO Management Engine (standard) Optional: HP Insight Control
	Form Factor	Tower (5U)
	Warranty	Server Warranty includes 3-Year Parts, 3-Year Labor, 3-Year Onsite support with next business day response

E5-2600 series Processors

HP ProLiant ML350p Gen8 E5-2609 1P 4GB-R P420i Hot Plug 6 LFF 460W PS Entry Svr 646675-001	**Processor**	(1) Intel® Xeon® E5-2609(2.40GHz/4-core/10MB/6.4GT-s QPI/80W) Processor
	Cache Memory	10MB (1 x 10MB) L3
	Memory	4GB (1x4GB) PC3L-10600R (DDR3-1333) Registered DIMMS **NOTE:** 11 DIMM slots available (23 if second processor is purchased).
	Network Controller	HP 1Gb Ethernet 4-port 331i Adapter
	Storage Controller	HP Smart Array P420i/Zero Memory Controller
	Hard Drive	None ship standard; includes 5 LFF hard drive blanks
	Internal Storage	(6) Hot plug LFF SAS/SATA HDD bays; upgradable to (18)
	Optical Drive	HP Half-Height SATA DVD-ROM Optical Drive
	Power Supply	(1) HP 460W Common Slot Gold Hot Plug Power Supply
	Fans	3 hot plug, non-redundant fans
	Accessories	USB Keyboard and Mouse ship standard
	Management	HP iLO Management Engine (standard)

Pre-configured Models

		Optional: HP Insight Control
	Form Factor	Tower (5U)
	Warranty	Server Warranty includes 3-Year Parts, 3-Year Labor, 3-Year Onsite support with next business day response

Base Models

E5-2600 v2 series Processors

HP ProLiant ML350p Gen8 E5-2620v2 1P 8GB-R P420i/512 FBWC 8 SFF 460W PS Server 736958-001	**Processor**	(1) Intel® Xeon® E5-2620 v2 (2.1GHz/6-core/15MB/7.2GT-s QPI/80W, DDR3-1333, HT, Turbo2- 3/3/4/4/5/5) Processor
	Cache Memory	15MB (1 x 15MB) L3
	Memory	8GB (1x8GB) PC3L-12800R (DDR3-1600LV) Registered DIMMS **NOTE:** 11 DIMM slots available (23 if second processor is purchased)
	Network Controller	HP 1Gb Ethernet 4-port 331i Adapter
	Storage Controller	HP Smart Array P420i/512M FBWC Controller (RAID 0/1/1+0/5/5+0/6/6+0)
	Hard Drive	None ship standard; includes 7 SFF hard drive blanks
	Internal Storage	(8) Hot plug SFF SAS/SATA HDD bays; upgradable to (24)
	Optical Drive	HP Half-Height SATA DVD-RW Optical Drive
	Power Supply	(1) HP 460W Common Slot Gold Hot Plug Power Supply
	Fans	3 hot plug, non-redundant fans
	Accessories	USB Keyboard and Mouse ship standard
	Management	HP iLO Management Engine (standard) Optional: HP Insight Control
	Form Factor	Tower (5U)
	Warranty	Server Warranty includes 3-Year Parts, 3-Year Labor, 3-Year Onsite support with next business day response

E5-2600 series Processors

HP ProLiant ML350p Gen8 E5-2620 1P 8GB-R P420i Hot Plug 8 SFF 460W PS Base Svr 646676-001	**Processor**	(1) Intel® Xeon® E5-2620 (2.0GHz/6-core/15MB/7.2GT-s QPI/95W, DDR3-1333, HT, Turbo2- 3/3/4/4/5/5) Processor
	Cache Memory	15MB (1 x 15MB) L3
	Memory	8GB (2x4B) PC3L-10600R (DDR3-1333) Registered DIMMS **NOTE:** 10 DIMM slots available (22 if second processor is purchased).
	Network Controller	HP 1Gb Ethernet 4-port 331i Adapter
	Storage Controller	HP Smart Array P420i/512M FBWC Controller (RAID 0/1/1+0/5/5+0/6/6+0)
	Hard Drive	None ship standard; includes 7 SFF hard drive blanks
	Internal Storage	(8) Hot plug SFF SAS/SATA HDD bays; upgradable to (24)
	Optical Drive	HP Half-Height SATA DVD-ROM Optical Drive
	Power Supply	(1) HP 460W Common Slot Gold Hot Plug Power Supply
	Fans	3 hot plug, non-redundant fans
	Accessories	USB Keyboard and Mouse ship standard
	Management	HP iLO Management Engine (standard) Optional: HP Insight Control
	Form Factor	Tower (5U)
	Warranty	Server Warranty includes 3-Year Parts, 3-Year Labor, 3-Year Onsite support with next business day response

Pre-configured Models

HP ProLiant ML350p Gen8 E5-2630 1P 8GB-R P420i Hot Plug 8 SFF 750W PS Base Svr 646677-001	**Processor**	(1) Intel® Xeon® E5-2630 (2.30GHz/6-core/15MB/7.2GT-s QPI/95W, DDR3-1333, HT, Turbo2- 3/3/4/4/5/5) Processor
	Cache Memory	15MB (1 x 15MB) L3
	Memory	8GB (2x4GB) PC3L-10600R (DDR3-1333) Registered DIMMS **NOTE:** 10 DIMM slots available (22 if second processor is purchased).
	Network Controller	HP 1Gb Ethernet 4-port 331i Adapter
	Storage Controller	HP Smart Array P420i/1G FBWC Controller (RAID 0/1/1+0/5/5+0/6/6+0)
	Hard Drive	None ship standard; includes 7 SFF hard drive blanks
	Internal Storage	(8) Hot plug SFF SAS/SATA HDD bays; upgradable to (24)
	Optical Drive	HP Half-Height SATA DVD-RW Optical Drive
	Power Supply	(1) HP 750W Common Slot Platinum Plus Hot Plug Power Supply
	Management	HP iLO Management Engine (standard) Optional: HP Insight Control
	Fans	3 hot plug, non-redundant fans
	Form Factor	Rack (5U)
	Warranty	Server Warranty includes 3-Year Parts, 3-Year Labor, 3-Year Onsite support with next business day response

Performance Models

HP ProLiant ML350p Gen8 E5-2650 2P 16GB-R P420i Hot Plug 8 SFF 750W PS ES Server 678237-001	**Processor**	(2) Intel® Xeon® E5-2650 (2.0GHz/8-core/20MB/8GT-s QPI/95W, DDR3-1600, HT, Turbo2- 4/4/5/5/5/7/8/8) Processors
	Cache Memory	20MB (1 x 20MB) L3
	Memory	16GB (4x4GB) PC3L-10600R (DDR3-1333) Registered DIMMS **NOTE:** 20 DIMM slots available.
	Network Controller	HP 1Gb Ethernet 4-port 331i Adapter
	Storage Controller	HP Smart Array P420i/2G FBWC Controller (RAID 0/1/1+0/5/5+0/6/6+0)
	Hard Drive	None ship standard; includes 7 SFF hard drive blanks
	Internal Storage	(8) Hot plug SFF SAS/SATA HDD bays; upgradable to (24)
	Optical Drive	HP Half-Height SATA DVD-RW Optical Drive
	Power Supply	(2) HP 750W Common Slot Platinum Plus Hot Plug Power Supply
	Fans	4 hot plug, redundant fans plus louvers
	Accessories	USB Keyboard and Mouse ship standard
	Management	HP iLO Management Engine (standard) HP Insight Control Standard
	Energy Star	Meets Energy Star requirements
	Form Factor	Tower (5U)
	Warranty	Server Warranty includes 3-Year Parts, 3-Year Labor, 3-Year Onsite support with next business day response

Performance Models

NOTE: These Models are Energy Star Certified.

E5-2600 v2 series Processors

HP ProLiant ML350p Gen8 E5-2650v2 2P 16GB-R P420i/2GB FBWC 8 SFF 750W RPS Server 736968-001	**Processor**	(2) Intel® Xeon® E5-2650 v2 (2.60GHz/8-core/20MB/7.2GT-s QPI/95W, DDR3-1333, HT, Turbo2- 3/3/4/4/5/5) Processors
	Cache Memory	20MB (1 x 20MB) L3
	Memory	16GB (2x8GB) PC3-14900R (DDR3-1866) Registered DIMMS **NOTE:** 20 DIMM slots available.

Pre-configured Models

	Network Controller	HP 1Gb Ethernet 4-port 331i Adapter
	Storage Controller	HP Smart Array P420i/2G FBWC Controller (RAID 0/1/1+0/5/5+0/6/6+0)
	Hard Drive	None ship standard; includes 7 SFF hard drive blanks
	Internal Storage	(8) Hot plug SFF SAS/SATA HDD bays; upgradable to (24)
	Optical Drive	HP Half-Height SATA DVD-RW Optical Drive
	Power Supply	(2) HP 750W Common Slot Platinum Plus Hot Plug Power Supplies
	Fans	4 hot plug, redundant fans plus louvers
	Accessories	USB Keyboard and Mouse ship standard
	Management	HP iLO Management Engine (standard) Optional: HP Insight Control
	Energy Star	Meets Energy Star requirements
	Form Factor	Tower(5U)
	Warranty	Server Warranty includes 3-Year Parts, 3-Year Labor, 3-Year Onsite support with next business day response
HP ProLiant ML350p Gen8 E5-2640v2 2P 16GB-R P420i/2GB FBWC 8 SFF 750W RPS Server 736967-001	**Processor**	(2) Intel® Xeon® E5-2640 v2 (2.0GHz/8-core/20MB/7.2GT-s QPI/95W, DDR3-1600, HT, Turbo2- 3/3/3/3/3/3/4/5) Processors
	Cache Memory	20MB (1 x 20MB) L3
	Memory	16GB (2x8GB) PC3L-12800R (DDR3-1600LV) Registered DIMMS **NOTE:** 20 DIMM slots available.
	Network Controller	HP 1Gb Ethernet 4-port 331i Adapter
	Storage Controller	HP Smart Array P420i/2G FBWC Controller (RAID 0/1/1+0/5/5+0/6/6+0)
	Hard Drive	None ship standard; includes 7 SFF hard drive blanks
	Internal Storage	(8) Hot plug SFF SAS/SATA HDD bays; upgradable to (24)
	Optical Drive	HP Half-Height SATA DVD-RW Optical Drive
	Power Supply	(2) HP 750W Common Slot Platinum Plus Hot Plug Power Supply
	Fans	4 hot plug, redundant fans plus louvers
	Management	HP iLO Management Engine (standard) Optional: HP Insight Control
	Energy Star	Meets Energy Star requirements
	Form Factor	Rack (5U)
	Warranty	Server Warranty includes 3-Year Parts, 3-Year Labor, 3-Year Onsite support with next business day response
E5-2600 series Processors		
HP ProLiant ML350p Gen8 E5-2640 2P 16GB-R P420i Hot Plug 8 SFF 750W PS Perf Svr 646678-001	**Processor**	(2) Intel® Xeon® E5-2640 (2.50GHz/6-core/15MB/7.2GT-s QPI/95W, DDR3-1333, HT, Turbo2- 3/3/4/4/5/5) Processors
	Cache Memory	15MB (1 x 15MB) L3
	Memory	16GB (4x4GB) PC3L-10600R (DDR3-1333) Registered DIMMS **NOTE:** 20 DIMM slots available.
	Network Controller	HP 1Gb Ethernet 4-port 331i Adapter
	Storage Controller	HP Smart Array P420i/2G FBWC Controller (RAID 0/1/1+0/5/5+0/6/6+0)
	Hard Drive	None ship standard; includes 7 SFF hard drive blanks
	Internal Storage	(8) Hot plug SFF SAS/SATA HDD bays; upgradable to (24)
	Optical Drive	HP Half-Height SATA DVD-RW Optical Drive
	Power Supply	(2) HP 750W Common Slot Platinum Plus Hot Plug Power Supplies
	Fans	4 hot plug, redundant fans plus louvers

Pre-configured Models

Management	HP iLO Management Engine (standard) HP Insight Control Standard
Energy Star	Meets Energy Star requirements
Form Factor	Rack(5U)
Warranty	Server Warranty includes 3-Year Parts, 3-Year Labor, 3-Year Onsite support with next business day response

Smart Buys

HP ProLiant ML350p Gen8 E5-2620 LFF Svr/S-Buy 686713-S01	**Processor**	Intel® Xeon® E5-2620 (2.0GHz/6-core/15MB/7.2GT-s QPI/95W, DDR3-1333, HT, Turbo2- 3/3/4/4/5/5)
	Cache Memory	15MB (1 x 15MB) L3 cache
	Memory	8GB (2x4GB) DDR3 RDIMM Low Voltage **NOTE:** 10 additional DIMM slots available (22 if second processor is purchased).
	Network Controller	HP 1Gb Ethernet 4-port 331i Adapter
	Storage Controller	HP Smart Array P420i/512MB FBWC Controller
	Hard Drive	None ship standard
	Internal Storage	(6) Hot plug LFF SAS/SATA HDD bays
	Optical Drive	HP Half-Height SATA DVD-RW Optical JB Drive
	Power Supply	HP 460W Common Slot Gold Hot Plug Power Supply Kit
	Fans	3 hot plug, non-redundant fans; upgradeable to 4 redundant fans with kit
	Management	iLO Management Engine Standard
	Form Factor	Tower (5U)
	Warranty	Server Warranty includes 3-Year Parts, 3-Year Labor, 3-Year Onsite support with next business day response
HP ProLiant ML350p Gen8 E5-2620 SFF Svr/S-Buy 686714-S01	**Processor**	Intel® Xeon® E5-2620 (2.0GHz/6-core/15MB/7.2GT-s QPI/95W, DDR3-1333, HT, Turbo2- 3/3/4/4/5/5)
	Cache Memory	15MB (1 x 15MB) L3 cache
	Memory	8GB (2x4GB) DDR3 RDIMM Low Voltage **NOTE:** 10 additional DIMM slots available. (22 if second processor is purchased)
	Network Controller	HP 1Gb Ethernet 4-port 331i Adapter
	Storage Controller	HP Smart Array P420i/512MB FBWC Controller
	Hard Drive	None ship standard
	Internal Storage	HP Half-Height SATA DVD-RW Optical JB Drive
	Optical Drive	HP 460W Common Slot Gold Hot Plug Power Supply Kit
	Power Supply	460 Watt Power Supply
	Fans	3 hot plug, non-redundant fans; upgradeable to 4 redundant fans with kit iLO Management Engine Standard
	Management	Tower (5U)
	Form Factor	Server Warranty includes 3-Year Parts, 3-Year Labor, 3-Year Onsite support with next business day response
	Warranty	
HP ProLiant ML350p Gen8 E5-2609v2 LFF Svr/S-Buy 736983-S01	**Processor**	Intel® Xeon® E5-2609 v2 (2.5GHz/4-core/10MB/6.4GT-s QPI/80W)
	Cache Memory	10MB (1 x 10MB) L3 cache
	Memory	HP 4GB (1x4GB) Single Rank x4 PC3L-12800R (DDR3-1600) Registered CAS-11 Low Voltage
	Network Controller	HP 1Gb Ethernet 4-port 331i Adapter
	Storage Controller	HP Smart Array P420i/Zero Memory Controller
	Hard Drive	None ship standard
	Internal Storage	Up to 6 SAS/SATA LFF
	Optical Drive	HP Half-Height SATA DVD-ROM Optical JB Drive
	Power Supply	HP 460W Common Slot Gold Hot Plug Power Supply Kit

Smart Buys

	Fans	3 hot plug, non-redundant fans
	Management	iLO Management Engine Standard
	Form Factor	Tower (5U)
	Warranty	Server Warranty includes 3-Year Parts, 3-Year Labor, 3-Year Onsite support with next business day response
HP ProLiant ML350p Gen8 E5-2609v2 2x300GB SAS 8SFF Svr/S-Buy 777883-S01	**Processor**	Intel® Xeon® E5-2609 v2 (2.5GHz/4-core/10MB/6.4GT-s QPI/80W)
	Cache Memory	10MB (1 x 10MB) L3 cache
	Memory	HP 8GB (1x8GB) Single Rank x4 PC3L-12800R (DDR3-1600) Registered CAS-11 Low Voltage
	Network Controller	HP 1Gb Ethernet 4-port 331i Adapter
	Storage Controller	HP Smart Array P420i/Zero Memory Controller
	Hard Drive	Includes (2) HP 300GB 6G SAS 10K SFF SC ENT Hard Drives; up to 8 SFF
	Internal Storage	Up to 8 SFF
	Optical Drive	Optional
	Power Supply	HP 460W Common Slot Gold Hot Plug Power Supply Kit
	Fans	3 hot plug, non-redundant fans
	Management	iLO Management Engine Standard Includes iLO Advanced 3yr 24x7 TS&U License
	Form Factor	Tower (5U)
	Warranty	Server Warranty includes 3-Year Parts, 3-Year Labor, 3-Year Onsite support with next business day response
HP ProLiant ML350p Gen8 E5-2620v2 SFF Svr/S-Buy 736984-S01	**Processor**	Intel® Xeon® E5-2620 v2 (2.1GHz/6-core/15MB/7.2GT-s QPI/80W, DDR3-1600, HT, Turbo2- 3/3/3/3/4/5)
	Cache Memory	15MB (1 x 15MB) L3 cache
	Memory	HP 8GB (1x8GB) Single Rank x4 PC3L-12800R (DDR3-1600) Registered CAS-11 Low Voltage
	Network Controller	HP 1Gb Ethernet 4-port 331i Adapter
	Storage Controller	HP Smart Array P420i/512MB FBWC Controller
	Hard Drive	None ship standard
	Internal Storage	Up to 8 SAS/SATA SFF
	Optical Drive	HP Half-Height SATA DVD-ROM Optical JB Drive
	Power Supply	HP 460W Common Slot Gold Hot Plug Power Supply Kit
	Fans	3 hot plug, non-redundant fans
	Management	iLO Management Engine Standard
	Form Factor	Tower (5U)
	Warranty	Server Warranty includes 3-Year Parts, 3-Year Labor, 3-Year Onsite support with next business day response
HP ProLiant ML350p Gen8 E5-2640v2 SFF Svr/S-Buy 736985-S01	**Processor**	Intel® Xeon® E5-2640 v2 (2.0GHz/8-core/20MB/7.2GT-s QPI/95W, DDR3-1600, HT, Turbo2- 3/3/3/3/3/3/4/5)
	Cache Memory	20MB (1 x 20MB) L3 cache
	Memory	HP 16GB (2x8GB) Single Rank x4 PC3L-12800R (DDR3-1600) Registered CAS-11 Low Voltage
	Network Controller	HP 1Gb Ethernet 4-port 331i Adapter
	Storage Controller	HP Smart Array P420i/512MB FBWC Controller

Smart Buys

	Hard Drive	None ship standard
	Internal Storage	Up to 8 SAS/SATA SFF
	Optical Drive	HP Half-Height SATA DVD-ROM Optical JB Drive
	Power Supply	(2) HP 460W Common Slot Gold Hot Plug Power Supply Kit
	Fans	3 hot plug, non-redundant fans
	Management	iLO Management Engine Standard
	Form Factor	Tower (5U)
	Warranty	Server Warranty includes 3-Year Parts, 3-Year Labor, 3-Year Onsite support with next business day response
HP ProLiant ML350p Gen8 E5-2630v2 LFF Svr/S-Buy 748305-S01	**Processor**	Intel® Xeon® E5-2630 v2 (2.6GHz/6-core/15MB/7.2GT-s QPI/80W, DDR3-1600, HT, Turbo2- 3/3/3/3/4/5)
	Cache Memory	15MB (1 x 15MB) L3 cache
	Memory	HP 32GB (2x16GB) Dual Rank x4 PC3L-12800R (DDR3-1600) Registered CAS-11 Low Voltage
	Network Controller	HP 1Gb Ethernet 4-port 331i Adapter
	Storage Controller	HP Smart Array P420i/512MB FBWC Controller
	Hard Drive	None ship standard
	Internal Storage	Up to 6 SAS/SATA LFF
	Optical Drive	HP Half-Height SATA DVD-RW Optical JB Drive
	Power Supply	HP 460W Common Slot Gold Hot Plug Power Supply Kit
	Fans	3 hot plug, non-redundant fans
	Management	iLO Management Engine Standard
	Form Factor	Tower (5U)
	Warranty	Server Warranty includes 3-Year Parts, 3-Year Labor, 3-Year Onsite support with next business day response
HP ProLiant ML350p Gen8 E5-2670v2 2P SFF Svr/S-Buy 748306-S01	**Processor**	(2) Intel® Xeon® E5-2670 v2 (2.5GHz/10-core/25MB/8.0GT-s QPI/115W, DDR3-1866, HT, Turbo2- 4/4/4/4/4/4/5/6/7/8)
	Cache Memory	25MB (1 x 25MB) L3 cache
	Memory	HP 32GB (2x16GB) Dual Rank x4 PC3-14900R (DDR3-1866) Registered CAS-13
	Network Controller	HP 1Gb Ethernet 4-port 331i Adapter
	Storage Controller	HP Smart Array P420i/1GB FBWC Controller
	Hard Drive	None ship standard
	Internal Storage	Up to 8 SAS/SATA SFF
	Optical Drive	HP Half-Height SATA DVD-ROM Optical JB Drive
	Power Supply	2xHP 460W Common Slot Gold Hot Plug Power Supply Ki
	Fans	4 hot plug, redundant fans plus louvers
	Management	iLO Management Engine Standard
	Form Factor	Tower (5U)
	Warranty	Server Warranty includes 3-Year Parts, 3-Year Labor, 3-Year Onsite support with next business day response

Configuration Information - Factory Integrated Models

NOTE: This section lists some of the steps required to configure a Factory Integrated Model. To ensure only valid configurations are ordered, HP recommends the use of an HP approved configurator. Contact your local sales representative for information on configurable product offerings and requirements.
NOTE: Factory Integrated Models must start with a CTO Server.
NOTE: FIO indicates that this option is only available as a factory installable option.
NOTE: All Factory Integrated Models will be populated with sufficient hard drive blanks based on the number of initial hard drives ordered with the server.

Step 1: Base Configuration (choose one of the following configurable models)

HP Models

ML350p Gen8 Tower Models

HP ProLiant ML350p Gen8 Hot Plug 8 SFF Configure-to-order Tower Server 652065-B21

Includes:

HP 1Gb Ethernet 4-port 331i Adapter
HP Smart Array P420i Controller
Eight (8) Hot-Plug (SFF) SAS/SATA Drive Bays
Seven (7) HDD blanks
Nine (9) USB ports
Eight (8) PCIe 3.0 slots (3x16, 1x8, 4x4), One (1) PCIe 2.0 slot (1x4)
USB Keyboard & Mouse (optional)
HP iLO Management Engine (standard)
Tower (5U) form factor
SID Module (optional)

HP ProLiant ML350p Gen8 Hot Plug 6 LFF Configure-to-order Tower Server 652066-B21

Includes:

HP 1Gb Ethernet 4-port 331i Adapter
HP Smart Array P420i Controller
Six (6) Hot-Plug (LFF) SAS/SATA Drive Bays
Five (5) HDD blanks
Nine (9) USB ports
Eight (8) PCIe 3.0 slots (3x16, 1x8, 4x4), One (1) PCIe 2.0 slot (1x4)
USB Keyboard & Mouse (optional)
HP iLO Management Engine (standard)
Tower (5U) form factor
SID Module (optional)

ML350p Gen8 Rack Models

HP ProLiant ML350p Gen8 Hot Plug 8 SFF Configure-to-order Rack Server 652063-B21

Includes:

HP 1Gb Ethernet 4-port 331i Adapter
HP Smart Array P420i Controller
Eight (8) Hot-Plug (SFF) SAS/SATA Drive Bays
Seven (7) HDD blanks
Nine (9) USB ports
Eight (8) PCIe 3.0 slots (3x16, 1x8, 4x4), One (1) PCIe .2.0 slot (1x4)
HP iLO Management Engine (standard)
Rack (5U) form factor
Sliding Rail Kit
SID module (standard)

HP ProLiant ML350p Gen8 Hot Plug 6 LFF Configure-to-order Rack Server 652064-B21

Includes:

HP Embedded 1 Gb Ethernet 4-port 331i Adapter
Embedded HP Smart Array P420i Controller

Six(6) Hot-Plug (LFF) SAS/SATA Drive Bays
Five(5) HDD blanks
Nine (9) USB ports
Eight (8) PCIe 3.0 slots (3x16, 1x8, 4x4), One (1) PCIe 2.0 slot (1x4)
HP iLO Management Engine (standard)
Rack (5U) form factor
Sliding Rail Kit
SID module (standard)

Step 2: Choose Required Options (only one of the following from each list unless otherwise noted)

HP Processors

NOTE: If two processors are desired, select one xxxxxx-L21 and one xxxxxx-B21

Entry Processors - E5-2600 v2 series Processors
NOTE: All support up to 1333MHz memory speeds.

HP ML350p Gen8 Intel® Xeon® E5-2609v2 (2.5GHz/4-core/10MB/80W) FIO Processor Kit	722284-L21
HP ML350p Gen8 Intel® Xeon® E5-2603v2 (1.8GHz/4-core/10MB/80W) FIO Processor Kit	722285-L21

Base Processors - E5-2600 v2 series Processors
NOTE: All support up to1600MHz DDR3 memory speeds.

HP ML350p Gen8 Intel® Xeon® E5-2640v2 (2.0GHz/8-core/20MB/95W) FIO Processor Kit	709491-L21
HP ML350p Gen8 Intel® Xeon® E5-2630v2 (2.6GHz/6-core/15MB/80W) FIO Processor Kit	709492-L21
HP ML350p Gen8 Intel® Xeon® E5-2620v2 (2.1GHz/6-core/15MB/80W) FIO Processor Kit	709493-L21
HP ML350p Gen8 Intel® Xeon® E5-2630Lv2 (2.4GHz/6-core/15MB/60W) FIO Processor Kit	722287-L21

Performance Processors - E5-2600 v2 series Processors
NOTE: All support up to 1866MHz DDR3 memory speeds

HP ML350p Gen8 Intel® Xeon® E5-2697v2 (2.7GHz/12-core/30MB/130W) FIO Processor Kit	722301-L21
HP ML350p Gen8 Intel® Xeon® E5-2690v2 (3.0GHz/10-core/25MB/130W) FIO Processor Kit	709486-L21
HP ML350p Gen8 Intel® Xeon® E5-2680v2 (2.8GHz/10-core/25MB/115W) FIO Processor Kit	709487-L21
HP ML350p Gen8 Intel® Xeon® E5-2670v2 (2.5GHz/10-core/25MB/115W) FIO Processor Kit	709488-L21
HP ML350p Gen8 Intel® Xeon® E5-2667v2 (3.3GHz/8-core/25MB/130W) FIO Processor Kit	722303-L21
HP ML350p Gen8 Intel® Xeon® E5-2650v2 (2.6GHz/8-core/20MB/95W) FIO Processor Kit	709490-L21
HP ML350p Gen8 Intel® Xeon® E5-2643v2 (3.5GHz/6-core/25MB/130W) FIO Processor Kit	722304-L21
HP ML350p Gen8 Intel® Xeon® E5-2637v2 (3.5GHz/4-core/15MB/130W) FIO Processor Kit	722305-L21

Base Processors - E5-2600 series Processors
NOTE: All support up to1333MHz DDR3 memory speeds.

HP ML350p Gen8 Intel® Xeon® E5-2620 (2.0GHz/6-core/15MB/95W) FIO Processor Kit	660598-L21

Configuration Information - Factory Integrated Models

	Performance Processors - E5-2600 series Processors **NOTE:** All support up to1600MHz DDR3 memory speeds.	
	HP ML350p Gen8 Intel® Xeon® E5-2665 (2.4GHz/8-core/20MB/115W) FIO Processor Kit	660596-L21
HP Memory	**NOTE:** HP memory from previous generation servers are not qualified or warranted with this HP ProLiant Server. HP SmartMemory is required to realize the memory performance improvements and enhanced functionality listed in this document for Gen8. For additional information, please see the HP SmartMemory QuickSpecs at: http://h18000.www1.hp.com/products/quickspecs/14225_na/14225_na.html **NOTE:** LRDIMM, RDIMM and UDIMMs are all distinct memory technologies and cannot be mixed within a server. The majority of ProLiant Gen8 servers support RDIMM, UDIMM and LRDIMM.	
	Registered DIMMs (RDIMMs) **NOTE:** The following memory is supported by the E5-2600 v2 series Processors.	
	HP 4GB (1x4GB) Single Rank x4 PC3L-12800R (DDR3-1600) Registered CAS-11 Low Voltage Memory Kit	713981-B21
	HP 4GB (1x4GB) Single Rank x4 PC3-14900R (DDR3-1866) Registered CAS-13 Memory Kit	708637-B21
	HP 8GB (1x8GB) Dual Rank x4 PC3L-12800R (DDR3-1600) Registered CAS-11 Low Voltage Memory Kit	713983-B21
	HP 8GB (1x8GB) Single Rank x4 PC3L-12800R (DDR3-1600) Registered CAS-11 Low Voltage Memory Kit	731765-B21
	HP 8GB (1x8GB) Dual Rank x4 PC3-14900R (DDR3-1866) Registered CAS-13 Memory Kit	708639-B21
	HP 8GB (1x8GB) Single Rank x4 PC3-14900R (DDR3-1866) Registered CAS-13 Memory Kit	731761-B21
	HP 16GB (1x16GB) Dual Rank x4 PC3L-12800R (DDR3-1600) Registered CAS-11 Low Voltage Memory Kit	713985-B21
	HP 16GB (1x16GB) Dual Rank x4 PC3-14900R (DDR3-1866) Registered CAS-13 Memory Kit	708641-B21
	Registered DIMMs (RDIMMs) **NOTE:** The following memory is supported by the E5-2600 series Processors.	
	HP 4GB (1x4GB) Single Rank x4 PC3L-10600R (DDR3-1333) Registered CAS-9 Low Voltage Memory Kit	647893-B21
	HP 4GB (1x4GB) Single Rank x4 PC3-12800R (DDR3-1600) Registered CAS-11 Memory Kit	647895-B21
	HP 8GB (1x8GB) Dual Rank x4 PC3L-10600R (DDR3-1333) Registered CAS-9 Low Voltage Memory Kit	647897-B21
	HP 8GB (1x8GB) Single Rank x4 PC3-12800R (DDR3-1600) Registered CAS-11 Memory Kit	647899-B21
	HP 8GB (1x8GB) Dual Rank x4 PC3-12800R (DDR3-1600) Registered CAS-11 Memory Kit	690802-B21
	HP 16GB (1x16GB) Dual Rank x4 PC3L-10600R (DDR3-1333) Registered CAS-9 Low Voltage Memory Kit	647901-B21
	HP 16GB (1x16GB) Dual Rank x4 PC3-12800R (DDR3-1600) Registered CAS-11 Memory Kit	672631-B21
	Unbuffered with ECC DIMMs (UDIMMs) **NOTE:** The following memory is supported by the E5-2600 v2 series Processors.	
	HP 2GB (1x2GB) Single Rank x8 PC3L-12800E (DDR3-1600) Unbuffered CAS-11 Low Voltage Memory Kit	713975-B21

Configuration Information - Factory Integrated Models

	HP 2GB (1x2GB) Single Rank x8 PC3-14900E (DDR3-1866) Unbuffered CAS-13 Memory Kit	708631-B21
	HP 4GB (1x4GB) Dual Rank x8 PC3L-12800E (DDR3-1600) Unbuffered CAS-11 Low Voltage Memory Kit	713977-B21
	HP 4GB (1x4GB) Dual Rank x8 PC3-14900E (DDR3-1866) Unbuffered CAS-13 Memory Kit	708633-B21
	HP 8GB (1x8GB) Dual Rank x8 PC3L-12800E (DDR3-1600) Unbuffered CAS-11 Low Voltage Memory Kit	713979-B21
	HP 8GB (1x8GB) Dual Rank x8 PC3-14900E (DDR3-1866) Unbuffered CAS-13 Memory Kit	708635-B21
	Unbuffered with ECC DIMMs (UDIMMs) **NOTE:** The following memory is supported by the E5-2600 series Processors.	
	HP 2GB (1x2GB) Single Rank x8 PC3-12800E (DDR3-1600) Unbuffered CAS-11 Memory Kit	669320-B21
	HP 2GB (1x2GB) Single Rank x8 PC3L-10600E (DDR3-1333) Unbuffered CAS-9 Low Voltage Memory Kit	647905-B21
	HP 4GB (1x4GB) Dual Rank x8 PC3-12800E (DDR3-1600) Unbuffered CAS-11 Memory Kit	669322-B21
	HP 4GB (1x4GB) Dual Rank x8 PC3L-10600E (DDR3-1333) Unbuffered CAS-9 Low Voltage Memory Kit	647907-B21
	HP 8GB (1x8GB) Dual Rank x8 PC3-12800E (DDR3-1600) Unbuffered CAS-11 Memory Kit	669324-B21
	HP 8GB (1x8GB) Dual Rank x8 PC3L-10600E (DDR3-1333) Unbuffered CAS-9 Low Voltage Memory Kit	647909-B21
	Load Reduced DIMMs (LRDIMMs) **NOTE:** The following memory is supported by the E5-2600 v2 series Processors.	
	HP 32GB (1x32GB) Quad Rank x4 PC3-14900L (DDR3-1866) Load Reduced CAS-13 Memory Kit	708643-B21
	Load Reduced DIMMs (LRDIMMs) **NOTE:** The following memory is supported by the E5-2600 series Processors.	
	HP 32GB (1x32GB) Quad Rank x4 PC3L-10600L (DDR3-1333) Load Reduced CAS-9 Low Voltage Memory Kit	647903-B21
	NOTE: All DDR3 memory option kits consist of one DIMM per kit. For detailed memory configuration rules and guidelines, please use the Online DDR3 Memory Configuration Tool: http://www.hp.com/go/ddr3memory-configurator. **NOTE:** Depending on the memory configuration and processor model, 1866MHz, 1600MHz, and 1333MHz memory may operate at a lower speed. Please see the see the "Memory" section later in this document and the Online Memory Configuration Tool for details at www.hp.com/go/ddr3memory-configurator.	
HP Power Supplies	**NOTE:** Mixing of power supplies in the same server is not supported. All power supplies inside a server must be exactly the same model. Mixing Gold, Platinum, and Platinum Plus certified power supplies is not supported.	
	NOTE: Prior to making a power supply selection it is highly recommended that the HP Power Advisor is run to determine the right size power supply for your server configuration. The HP Power Advisor is located at: http://www.hp.com/go/hppoweradvisor	
	HP Common Slot Platinum Plus Power Supply Kits **NOTE:** The following Power Supplies offer 94% Efficiency with support for Intelligent Power Discovery.	
	HP 460W Common Slot Platinum Plus Hot Plug Power Supply Kit	656362-B21

Configuration Information - Factory Integrated Models

	HP 750W Common Slot Platinum Plus Hot Plug Power Supply Kit	656363-B21
	HP 1200W Common Slot Platinum Plus Hot Plug Power Supply Kit	656364-B21
	HP Common Slot Gold Power Supplies **NOTE:** The following Power Supplies offer up to 92% efficiency.	
	HP 460W CS Gold Ht Plg Power Supply Kit	503296-B21
	HP 750W Common Slot Gold Hot Plug Power Supply Kit	512327-B21
	HP Common Slot -48VDC Power Supplies	
	HP 750W Common Slot -48VDC Hot Plug Power Supply Kit **NOTE:** The HP 750W Common Slot -48VDC power supply does not ship with a power cable. It has been designed with a terminal block connection allowing for custom design of power cords by the user.	636673-B21
	Enablement Kit	
	HP 4X1200W RPS FIO Enablement Kit **NOTE:** This kit Requires the selection of either 2 x 1200W power supply kits or 4 x 1200w power supply kits.	659487-B21

Step 3: Choose Additional Factory Integratable Options (only one of the following from each list unless otherwise noted)

HP Graphics Options	HP 3rd FIO Graphic Card Power Cable Kit **NOTE:** This FIO kit only required when 3rd graphic card ordered.	700835-B21
HP SID Module	HP Systems Insight Display FIO Kit **NOTE:** Provides health status for key components (option for Tower Models only P/N: 652065-B21 and P/N: 652066-B21, standard in Rack Models)	660583-B21
HP Insight Software	HP Insight Control including 1yr 24x7 Support ProLiant ML/DL/BL-bundle Single Server FIO License	C6N36A
HP Storage Controller	**Optional Upgrade**	
	HP 4GB Flash Backed Write Cache FIO Kit for P-series Smart Array Controllers	698537-B21

Step 4: Choose Additional Options for Factory Integration

NOTE: For additional options, please refer to the "Core Options" and "Additional Options" section below.

Core Options

NOTE: Some options may not be integrated at the factory. Contact your local sales representative for additional information.

HP Unique Options	HP Hot Plug Redundant Fan Kit	659486-B21
	HP Tower to Rack Conversion Tray Kit	659488-B21
	HP Security Bezel Kit **NOTE:** For restricting access to a rack model	660584-B21
	HP Graphic Card Support Kit **NOTE:** The ML350p Gen8 supports up to 3 graphic cards. HP Graphic Card Support Kit (660582-B21) will be required per Graphic Card HP 3rd Graphic Card Power Cable FIO Kit (700835-B21) will be an additional request for the 3rd graphics card support NOTE: Please see the HP Power Advisor for estimated power consumption of your individual system configuration prior to installing GPUs. The HP Power Advisor is located at: www.hp.com/go/hppoweradvisor.	660582-B21
	HP ML350p Gen8 Smart Array Cable Kit **NOTE:** While P430 purchased, this option kit needs to be purchased.	725675-B21
HP Processors	**Entry Processors - E5-2600 v2 series Processors** **NOTE:** All support up to 1333MHz memory speeds.	
	HP ML350p Gen8 Intel® Xeon® E5-2609v2 (2.5GHz/4-core/10MB/80W) Processor Kit	722284-B21
	HP ML350p Gen8 Intel® Xeon® E5-2603v2 (1.8GHz/4-core/10MB/80W) Processor Kit	722285-B21
	Base Processors - E5-2600 v2 series Processors **NOTE:** All support up to1600MHz DDR3 memory speeds.	
	HP ML350p Gen8 Intel® Xeon® E5-2640v2 (2.0GHz/8-core/20MB/95W) Processor Kit	709491-B21
	HP ML350p Gen8 Intel® Xeon® E5-2640v2 (2.0GHz/8-core/20MB/95W) Processor Kit/S-Buy	709491-S21
	HP ML350p Gen8 Intel® Xeon® E5-2630v2 (2.6GHz/6-core/15MB/80W) Processor Kit	709492-B21
	HP ML350p Gen8 Intel® Xeon® E5-2620v2 (2.1GHz/6-core/15MB/80W) Processor Kit	709493-B21
	HP ML350p Gen8 Intel® Xeon® E5-2620v2 (2.1GHz/6-core/15MB/80W) Processor Kit/S-Buy	709493-S21
	HP ML350p Gen8 Intel® Xeon® E5-2630Lv2 (2.4GHz/6-core/15MB/60W) Processor Kit	722287-B21
	Performance Processors - E5-2600 v2 series Processors **NOTE:** All support up to 1866MHz DDR3 memory speeds.	
	HP ML350p Gen8 Intel® Xeon® E5-2697v2 (2.7GHz/12-core/30MB/130W) Processor Kit	722301-B21
	HP ML350p Gen8 Intel® Xeon® E5-2690v2 (3.0GHz/10-core/25MB/130W) Processor Kit	709486-B21
	HP ML350p Gen8 Intel® Xeon® E5-2670v2 (2.5GHz/10-core/25MB/115W) Processor Kit	709488-B21
	HP ML350p Gen8 Intel® Xeon® E5-2667v2 (3.3GHz/8-core/25MB/130W) Processor Kit	722303-B21
	HP ML350p Gen8 Intel® Xeon® E5-2650v2 (2.6GHz/8-core/20MB/95W) Processor Kit	709490-B21
	HP ML350p Gen8 Intel® Xeon® E5-2643v2 (3.5GHz/6-core/25MB/130W) Processor Kit	722304-B21
	HP ML350p Gen8 Intel® Xeon® E5-2637v2 (3.5GHz/4-core/15MB/130W) Processor Kit	722305-B21
	Entry Processors - E5-2600 series Processors **NOTE:** All support up to 1066MHz memory speeds.	
	HP ML350p Gen8 Intel® Xeon® E5-2609 (2.40GHz/4-core/10MB/80W) Processor Kit	660597-B21

Core Options

	HP ML350p Gen8 Intel® Xeon® E5-2603 (1.8GHz/4-core/10MB/80W) Processor Kit	660595-B21
	Base Processors - E5-2600 series Processors **NOTE:** All support up to1333MHz DDR3 memory speeds.	
	HP ML350p Gen8 Intel® Xeon® E5-2640 (2.5GHz/6-core/15MB/95W) Processor Kit	660600-B21
	HP ML350p Gen8 Intel® Xeon® E5-2630 (2.30GHz/6-core/15MB/95W) Processor Kit	660599-B21
	HP ML350p Gen8 Intel® Xeon® E5-2620 (2.0GHz/6-core/15MB/95W) Processor Kit	660598-B21
	HP ML350p Gen8 Intel® Xeon® E5-2630L (2.0GHz/6-core/15MB/60W) Processor Kit	660607-B21
	Performance Processors - E5-2600 series Processors **NOTE:** All support up to1600MHz DDR3 memory speeds.	
	HP ML350p Gen8 Intel® Xeon® E5-2690 (2.9GHz/8-core/20MB/135W) Processor Kit	660605-B21
	HP ML350p Gen8 Intel® Xeon® E5-2680 (2.7GHz/8-core/20MB/130W) Processor Kit	660604-B21
	HP ML350p Gen8 Intel® Xeon® E5-2670 (2.6GHz/8-core/20MB/115W) Processor Kit	660603-B21
	HP ML350p Gen8 Intel® Xeon® E5-2667 (2.9GHz/6-core/15MB/130W) Processor Kit	660608-B21
	HP ML350p Gen8 Intel® Xeon® E5-2665 (2.4GHz/8-core/20MB/115W) Processor Kit	660596-B21
	HP ML350p Gen8 Intel® Xeon® E5-2660 (2.2GHz/8-core/20MB/95W) Processor Kit	660602-B21
	HP ML350p Gen8 Intel® Xeon® E5-2650 (2.0GHz/8-core/20MB/95W) Processor Kit	660601-B21
	HP ML350p Gen8 Intel® Xeon® E5-2650L (1.8GHz/8-core/20MB/70W) Processor Kit	660606-B21
	HP ML350p Gen8 Intel® Xeon® E5-2643 (3.3GHz/4-core/10MB/130W) Processor Kit	678242-B21
	HP ML350p Gen8 Intel® Xeon® E5-2637 (3.0GHz/2-core/5MB/80W) Processor Kit	678244-B21
	Processor Upgrade Kit	
	HP ML350p Gen8 Processor Upgrade Lever Kit **NOTE:** Customers who use ML350p Gen8 sandy bridge processors need to purchase Heatsink lever upgrade kit 749245-B21 when plan to upgrade to Ivy bridge processor.	749245-B21
HP Memory	**NOTE:** HP memory from previous generation servers are not qualified or warranted with this HP ProLiant Server. HP SmartMemory is required to realize the memory performance improvements and enhanced functionality listed in this document for Gen8. For additional information, please see the HP SmartMemory QuickSpecs at: http://h18000.www1.hp.com/products/quickspecs/14225_na/14225_na.html **NOTE:** LRDIMM, RDIMM and UDIMMs are all distinct memory technologies and cannot be mixed within a server. The majority of ProLiant Gen8 servers support RDIMM, UDIMM and LRDIMM.	
	Registered DIMMs (RDIMMs) **NOTE:** The following memory is supported by the E5-2600 v2 series Processors.	
	HP 4GB (1x4GB) Single Rank x4 PC3L-12800R (DDR3-1600) Registered CAS-11 Low Voltage Memory Kit	713981-B21
	HP 4GB (1x4GB) Single Rank x4 PC3L-12800R (DDR3-1600) Registered CAS-11 LP Memory Kit/S-Buy	713981-S21
	HP 4GB (1x4GB) Single Rank x4 PC3-14900R (DDR3-1866) Registered CAS-13 Memory Kit	708637-B21
	HP 4GB (1x4GB) Single Rank x4 PC3-14900R (DDR3-1866) Registered CAS-13 Memory Kit/S-Buy	708637-S21
	HP 8GB (1x8GB) Dual Rank x4 PC3L-12800R (DDR3-1600) Registered CAS-11 Low Voltage Memory Kit	713983-B21
	HP 8GB (1x8GB) Single Rank x4 PC3L-12800R (DDR3-1600) Registered CAS-11 Low Voltage Memory Kit	731765-B21
	HP 8GB (1x8GB) Dual Rank x4 PC3-14900R (DDR3-1866) Registered CAS-13 Memory Kit	708639-B21

Core Options

HP 8GB (1x8GB) Single Rank x4 PC3-14900R (DDR3-1866) Registered CAS-13 Memory Kit	731761-B21
HP 8GB (1x8GB) Single Rank x4 PC3-14900R (DDR3-1866) Registered CAS-13 Memory Kit/S-Buy	731761-S21
HP 16GB (1x16GB) Dual Rank x4 PC3L-12800R (DDR3-1600) Registered CAS-11 Low Voltage Memory Kit	713985-B21
HP 16GB (1x16GB) Dual Rank x4 PC3L-12800R (DDR3-1600) Registered CAS-11 LP Memory Kit/S-Buy	713985-S21
HP 16GB (1x16GB) Dual Rank x4 PC3-14900R (DDR3-1866) Registered CAS-13 Memory Kit	708641-B21
HP 16GB (1x16GB) Dual Rank x4 PC3-14900R (DDR3-1866) Registered CAS-13 Memory Kit/S-Buy	708641-S21
Registered DIMMs (RDIMMs) **NOTE:** The following memory is supported by the E5-2600 series Processors.	
HP 4GB (1x4GB) Single Rank x4 PC3L-10600R (DDR3-1333) Registered CAS-9 Low Voltage Memory Kit	647893-B21
HP 4GB (1x4GB) Single Rank x4 PC3L-10600R (DDR3-1333) Registered CAS-9 Low Voltage Memory Kit/S-Buy	647893-S21
HP 4GB (1x4GB) Single Rank x4 PC3-12800R (DDR3-1600) Registered CAS-11 Memory Kit	647895-B21
HP 4GB (1x4GB) Single Rank x4 PC3-12800 (DDR3-1600) Reg CAS-11 Memory Kit/S-Buy	647895-S21
HP 8GB (1x8GB) Dual Rank x4 PC3L-10600R (DDR3-1333) Registered CAS-9 Low Voltage Memory Kit	647897-B21
HP 8GB (1x8GB) Dual Rank x4 PC3L-10600R (DDR3-1333) Registered CAS-9 Low Voltage Memory Kit/S-Buy	647897-S21
HP 8GB (1x8GB) Single Rank x4 PC3-12800R (DDR3-1600) Registered CAS-11 Memory Kit	647899-B21
HP 8GB (1x8GB) Single Rank x4 PC3-12800R (DDR3-1600) Registered CAS-11 Memory Kit S-Buy	647899-S21
HP 8GB (1x8GB) Dual Rank x4 PC3-12800R (DDR3-1600) Registered CAS-11 Memory Kit	690802-B21
HP 16GB (1x16GB) Dual Rank x4 PC3L-10600R (DDR3-1333) Registered CAS-9 Low Voltage Memory Kit	647901-B21
HP 16GB (1x16GB) Dual Rank x4 PC3L-10600R (DDR3-1333) Registered CAS-9 Low Voltage Memory Kit/S-Buy	647901-S21
HP 16GB (1x16GB) Dual Rank x4 PC3-12800R (DDR3-1600) Registered CAS-11 Memory Kit	672631-B21
HP 16GB (1x16GB) Dual Rank x4 PC3-12800R (DDR3-1600) Registered CAS-11 Memory Kit S-Buy	672631-S21
Unbuffered with ECC DIMMs (UDIMMs) **NOTE:** The following memory is supported by the E5-2600 v2 series Processors.	
HP 2GB (1x2GB) Single Rank x8 PC3L-12800E (DDR3-1600) Unbuffered CAS-11 Low Voltage Memory Kit	713975-B21
HP 2GB (1x2GB) Single Rank x8 PC3-14900E (DDR3-1866) Unbuffered CAS-13 Memory Kit	708631-B21
HP 4GB (1x4GB) Dual Rank x8 PC3L-12800E (DDR3-1600) Unbuffered CAS-11 Low Voltage Memory Kit	713977-B21
HP 4GB (1x4GB) Dual Rank x8 PC3L-12800E (DDR3-1600) Unbuffered CAS-11 LP	713977-S21

Core Options

	Memory Kit/S-Buy	
	HP 4GB (1x4GB) Dual Rank x8 PC3-14900E (DDR3-1866) Unbuffered CAS-13 Memory Kit	708633-B21
	HP 4GB (1x4GB) Dual Rank x8 PC3-14900E (DDR3-1866) Unbuffered CAS-13 Memory Kit/S-Buy	708633-S21
	HP 8GB (1x8GB) Dual Rank x8 PC3L-12800E (DDR3-1600) Unbuffered CAS-11 Low Voltage Memory Kit	713979-B21
	HP 8GB (1x8GB) Dual Rank x8 PC3L-12800E (DDR3-1600) Unbuffered CAS-11 LP Memory Kit/S-Buy	713979-S21
	HP 8GB (1x8GB) Dual Rank x8 PC3-14900E (DDR3-1866) Unbuffered CAS-13 Memory Kit	708635-B21
	Unbuffered with ECC DIMMs (UDIMMs) **NOTE:** The following memory is supported by the E5-2600 series Processors.	
	HP 2GB (1x2GB) Single Rank x8 PC3-12800E (DDR3-1600) Unbuffered CAS-11 Memory Kit	669320-B21
	HP 2GB (1x2GB) Single Rank x8 PC3L-10600E (DDR3-1333) Unbuffered CAS-9 Low Voltage Memory Kit	647905-B21
	HP 2GB (1x2GB) Single Rank x8 PC3L-10600E (DDR3-1333) Unbuffered CAS-9 Low Voltage Memory Kit/S-Buy	647905-S21
	HP 4GB (1x4GB) Dual Rank x8 PC3-12800E (DDR3-1600) Unbuffered CAS-11 Memory Kit	669322-B21
	HP 4GB (1x4GB) Dual Rank x8 PC3L-10600E (DDR3-1333) Unbuffered CAS-9 Low Voltage Memory Kit	647907-B21
	HP 4GB (1x4GB) Dual Rank x8 PC3L-10600E (DDR3-1333) Unbuffered CAS-9 Low Voltage Memory Kit/S-Buy	647907-S21
	HP 8GB (1x8GB) Dual Rank x8 PC3-12800E (DDR3-1600) Unbuffered CAS-11 Memory Kit	669324-B21
	HP 8GB (1x8GB) Dual Rank x8 PC3L-10600E (DDR3-1333) Unbuffered CAS-9 Low Voltage Memory Kit	647909-B21
	Load Reduced DIMMs (LRDIMMs) **NOTE:** The following memory is supported by the E5-2600 v2 series Processors.	
	HP 32GB (1x32GB) Quad Rank x4 PC3-14900L (DDR3-1866) Load Reduced CAS-13 Memory Kit	708643-B21
	HP 32GB (1x32GB) Quad Rank x4 PC3-14900L (DDR3-1866) Load Reduced CAS-13 Memory Kit/S-Buy	708643-S21
	Load Reduced DIMMs (LRDIMMs) **NOTE:** The following memory is supported by the E5-2600 series Processors.	
	HP 32GB (1x32GB) Quad Rank x4 PC3L-10600L (DDR3-1333) Load Reduced CAS-9 Low Voltage Memory Kit	647903-B21
	NOTE: All DDR3 memory option kits consist of one DIMM per kit. For detailed memory configuration rules and guidelines, please use the Online DDR3 Memory Configuration Tool: http://www.hp.com/go/ddr3memory-configurator. **NOTE:** Depending on the memory configuration and processor model, 1866MHz, 1600MHz, and 1333MHz memory may operate at a lower speed. Please see the see the "Memory" section later in this document and the Online Memory Configuration Tool for details at: www.hp.com/go/ddr3memory-configurator.	
HP Optical Drives	HP Half-Height SATA DVD ROM JackBlack Optical Drive	624189-B21
	HP Half-Height SATA DVD RW JackBlack Optical Drive	624192-B21
	NOTE: A total of two optical drives can be added. A second and third optical drive	

requires the HP 2nd Media Bay Cage Kit (Part Number 661618-B21).

HP Hard Drives

NOTE: The components of a storage subsystem (e.g. the drive, the HBA/controller, firmware, and the server backplane) should operate at the same data transfer rate or the system bandwidth will be negotiated down to an acceptable level for all components.
NOTE: Hard drives have either a one year or three year warranty; refer to the specific hard drive QuickSpecs for details.

12G SAS Hot Plug with SmartDrive SFF (2.5-inch) Enterprise Drives	
HP 600GB 12G SAS 15K rpm SFF (2.5-inch) SC Enterprise 3yr Warranty Hard Drive	759212-B21
HP 450GB 12G SAS 15K rpm SFF (2.5-inch) SC Enterprise 3yr Warranty Hard Drive	759210-B21
HP 300GB 12G SAS 15K rpm SFF (2.5-inch) SC Enterprise 3yr Warranty Hard Drive	759208-B21
12G SAS Hot Plug SmartDrive LFF (3.5-inch) Converter Enterprise Drives	
HP 600GB 12G SAS 15K rpm LFF (3.5-inch) SC Converter Enterprise 3yr Warranty Hard Drive	765424-B21
HP 450GB 12G SAS 15K rpm LFF (3.5-inch) SC Converter Enterprise 3yr Warranty Hard Drive	737394-B21
HP 300GB 12G SAS 15K rpm LFF (3.5-inch) SC Converter Enterprise 3yr Warranty Hard Drive	737261-B21
12G SAS Hot Plug SFF (2.5-inch) Enterprise Drives	
HP 1.2TB 12G SAS 10K rpm SFF (2.5-inch) SC Enterprise 3yr Warranty Hard Drive	781518-B21
HP 900GB 12G SAS 10K rpm SFF (2.5-inch) SC Enterprise 3yr Warranty Hard Drive	785069-B21
HP 600GB 12G SAS 10K rpm SFF (2.5-inch) SC Enterprise 3yr Warranty Hard Drive	781516-B21
HP 300GB 12G SAS 10K rpm SFF (2.5-inch) SC Enterprise 3yr Warranty Hard Drive	785067-B21
12G SAS Hot Plug LFF (3.5-inch) Midline (MDL) 512e Drives	
HP 6TB 12G SAS 7.2K rpm LFF (3.5-inch) SC Midline 512e 1yr Warranty Hard Drive	765259-B21
HP 6TB 6G SATA 7.2K rpm LFF (3.5-inch) SC Midline 512e 1yr Warranty Hard Drive	765255-B21
HP 4TB 12G SAS 7.2K rpm LFF (3.5-inch) SC Midline 512e 1yr Warranty Hard Drive	765257-B21
HP 4TB 6G SATA 7.2K rpm LFF (3.5-inch) SC Midline 512e 1yr Warranty Hard Drive	765253-B21
12G SAS Hot Plug SFF (2.5-inch) SC 512e Drives	
HP 2TB 12G SAS 7.2K rpm SFF (2.5-inch) SC 512e 1yr Warranty Hard Drive	765466-B21
HP 1TB 12G SAS 7.2K rpm SFF (2.5-inch) SC 512e 1yr Warranty Hard Drive	765464-B21
12G SAS Hot Plug LFF (3.5-inch) SC 512e Performance Drives	
HP 6TB 12G SAS 7.2K rpm LFF (3.5-inch) SC 512e Performance 1yr Warranty Hard Drive	793671-B21
HP 4TB 12G SAS 7.2K rpm LFF (3.5-inch) SC 512e Performance 1yr Warranty Hard Drive	793669-B21
6G SAS Hot Plug with SmartDrive SFF (2.5-inch) Enterprise Drives	
HP 1.2TB 6G SAS 10K rpm SFF (2.5-inch) SC Dual Port Enterprise 3yr Warranty Hard Drive	718162-B21
HP 1.2TB 6G SAS 10K rpm SFF (2.5-inch) SC Dual Port ENT 3yr Wty Hard Drive/S-Buy	718162-S21
HP 900GB 6G SAS 10K rpm SFF (2.5-inch) SC Enterprise 3yr Warranty Hard Drive	652589-B21
HP 900GB 6G SAS 10K rpm SFF (2.5-inch) SC Enterprise 3yr Warranty Hard Drive/S-Buy	652589-S21
HP 600GB 6G SAS 10K rpm SFF (2.5-inch) SC Enterprise 3yr Warranty Hard Drive	652583-B21
HP 600GB 6G SAS 10K rpm SFF (2.5-inch) SC Enterprise 3yr Warranty Hard Drive/S-Buy	652583-S21

Core Options

HP 450GB 6G SAS 10K rpm SFF (2.5-inch) SC Enterprise 3yr Warranty Hard Drive	652572-B21
HP 300GB 6G SAS 10K rpm SFF (2.5-inch) SC Enterprise 3yr Warranty Hard Drive	652564-B21
HP 300GB 6G SAS 10K rpm SFF (2.5-inch) SC Enterprise 3yr Warranty Hard Drive/S-Buy	652564-S21
HP 300GB 6G SAS 15K rpm SFF (2.5-inch) SC Enterprise 3yr Warranty Hard Drive	652611-B21
HP 300GB 6G SAS 15K rpm SFF (2.5-inch) SC Enterprise 3yr Warranty Hard Drive/S-Buy	652611-S21
HP 146GB 6G SAS 15K rpm SFF (2.5-inch) SC Enterprise 3yr Warranty Hard Drive	652605-B21
HP 146GB 6G SAS 15K rpm SFF (2.5-inch) SC Enterprise 3yr Warranty Hard Drive/S-Buy	652605-S21
6G SAS Hot Plug SmartDrive SFF (2.5-inch) Midline Drives	
HP 1TB 6G SAS 7.2K rpm SFF (2.5-inch) SC Midline 1yr Warranty Hard Drive	652749-B21
HP 500GB 6G SAS 7.2K rpm SFF (2.5-inch) SC Midline 1yr Warranty Hard Drive	652745-B21
6G SAS Hot Plug SmartDrive LFF (3.5-inch) Enterprise Drives	
HP 600GB 6G SAS 15K rpm LFF (3.5-inch) SC Enterprise 3yr Warranty Hard Drive	652620-B21
HP 450GB 6G SAS 15K rpm LFF (3.5-inch) SC Enterprise 3yr Warranty Hard Drive	652615-B21
6G SAS Hot Plug SmartDrive SFF (2.5-inch) Midline Drives	
HP 1TB 6G SAS 7.2K rpm SFF (2.5-inch) SC Midline 1yr Warranty Hard Drive	652749-B21
HP 500GB 6G SAS 7.2K rpm SFF (2.5-inch) SC Midline 1yr Warranty Hard Drive	652745-B21
6G SAS Hot Plug SmartDrive LFF (3.5-inch) Midline Drives	
HP 6TB 6G SAS 7.2K rpm LFF (3.5-inch) SC Midline 1yr Warranty Hard Drive	761477-B21
HP 4TB 6G SAS 7.2K rpm LFF (3.5-inch) SC Midline 1yr Warranty Hard Drive	695510-B21
HP 3TB 6G SAS 7.2K rpm LFF (3.5-inch) SC Midline 1yr Warranty Hard Drive	652766-B21
HP 2TB 6G SAS 7.2K rpm LFF (3.5-inch) SC Midline 1yr Warranty Hard Drive	652757-B21
HP 1TB 6G SAS 7.2K rpm LFF (3.5-inch) SC Midline 1yr Warranty Hard Drive	652753-B21
NOTE: Please see the QuickSpecs for Technical Specifications and additional information: http://h18000.www1.hp.com/products/quickspecs/12244_na/12244_na.html	
6G SATA Hot Plug with SmartDrive SFF (2.5-inch) Midline (MDL) Drives	
HP 1TB 6G SATA 7.2K rpm SFF (2.5-inch) SC Midline 1yr Warranty Hard Drive	655710-B21
HP 1TB 6G SATA 7.2K rpm SFF (2.5-inch) SC Midline 1yr Warranty Hard Drive/S-Buy	655710-S21
HP 500GB 6G SATA 7.2K rpm SFF (2.5-inch) SC Midline 1yr Warranty Hard Drive	655708-B21
HP 500GB 6G SATA 7.2K rpm SFF (2.5-inch) SC Midline 1yr Warranty Hard Drive/S-Buy	655708-S21
6G SATA Hot Plug with SmartDrive LFF (3.5-inch) Midline (MDL) Drives	
HP 6TB 6G SATA 7.2K rpm LFF (3.5-inch) SC Midline 1yr Warranty Hard Drive	753874-B21
HP 4TB 6G SATA 7.2k rpm LFF (3.5-inch) SC Midline 1yr Warranty Hard Drive	693687-B21
HP 3TB 6G SATA 7.2K rpm LFF (3.5-inch) SC Midline 1yr Warranty Hard Drive	628061-B21
HP 2TB 6G SATA 7.2K rpm LFF (3.5-inch) SC Midline 1yr Warranty Hard Drive	658079-B21
HP 2TB 6G SATA 7.2K rpm LFF (3.5-inch) SC Midline 1yr Warranty Hard Drive/S-Buy	658079-S21
HP 1TB 6G SATA 7.2K rpm LFF (3.5-inch) SC Midline 1yr Warranty Hard Drive	657750-B21
HP 1TB 6G SATA 7.2K rpm LFF (3.5-inch) SC Midline 1yr Warranty Hard Drive/S-Buy	657750-S21
HP 500GB 6G SATA 7.2K rpm LFF (3.5-inch) SC Midline 1yr Warranty Hard Drive	658071-B21
HP 500GB 6G SATA 7.2K rpm LFF (3.5-inch) SC Midline 1yr Wty Hard Drive/S-Buy	658071-S21
6G SATA Hot Plug SFF (2.5-inch) SC 512e Drives	
HP 2TB 6G SATA 7.2K rpm SFF (2.5-inch) SC 512e 1yr Warranty Hard Drive	765455-B21

Core Options

HP 1TB 6G SATA 7.2K rpm SFF (2.5-inch) SC 512e 1yr Warranty Hard Drive	765453-B21
6G SATA Hot Plug LFF (3.5-inch) SC 512e Performance Drives	
HP 6TB 6G SATA 7.2K rpm LFF (3.5-inch) SC 512e Performance 1yr Warranty Hard Drive	793667-B21
HP 4TB 6G SATA 7.2K rpm LFF (3.5-inch) SC 512e Performance 1yr Warranty Hard Drives	793665-B21
NOTE: SATA hard drives have a 1-year warranty. Please see the QuickSpecs for Technical Specifications and additional information: http://h18000.www1.hp.com/products/quickspecs/13021_na/13021_na.html	
12G SAS Hot Plug Value Endurance SFF (2.5-inch) Enterprise Value Solid State Drives	
HP 1.6TB 12G SAS Value Endurance SFF 2.5-in SC Enterprise Value 3yr Wty Solid State Drive	762263-B21
HP 800GB 12G SAS Value Endurance SFF 2.5-in SC Enterprise Value 3yr Wty Solid State Drive	762261-B21
12G SAS Hot Plug Value Endurance SFF (3.5-inch) Enterprise Value Solid State Drives	
HP 1.6TB 12G SAS Value Endurance LFF 3.5-in SC Enterprise Value 3yr Wty Solid State Drive	762272-B21
HP 800GB 12G SAS Value Endurance LFF 3.5-in SC Enterprise Value 3yr Wty Solid State Drive	762270-B21
NOTE: Please see the QuickSpecs for Technical Specifications and additional information: http://h18000.www1.hp.com/products/quickspecs/14038_na/14038_na.html	
12G SAS High Endurance Hot Plug SFF (2.5-inch) Enterprise Performance Solid State Drives	
HP 400GB 12G SAS High Endurance SFF 2.5-in SC Enterprise Performance 3yr Wty Solid State Drive **NOTE:** This drive supports Gen8 servers only.	741155-B21
12G SAS Mainstream Endurance Hot Plug SFF (2.5-inch) Enterprise Mainstream H2 Solid State Drives	
HP 1.6TB 12G SAS Mainstream Endurance SFF 2.5-in ENT Mainstream SC 3yr Wty H2 Solid State Drive	779176-B21
HP 800GB 12G SAS Mainstream Endurance SFF 2.5-in ENT Mainstream SC 3yr Wty H2 Solid State Drive	779172-B21
HP 400GB 12G SAS Mainstream Endurance SFF 2.5-in ENT Mainstream SC 3yr Wty H2 Solid State Drive	779168-B21
HP 200GB 12G SAS Mainstream Endurance SFF 2.5-in ENT Mainstream SC 3yr Wty H2 Solid State Drive	779164-B21
12G SAS Hot Plug SFF (2.5-inch) SC Read/Write Intensive Solid State Drives	
HP 1.92TB 12G SAS Read Intensive SFF 2.5-in SC 3yr Wty Solid State Drive	802891-B21
HP 800GB 12G SAS Write Intensive SFF 2.5-in SC 3yr Wty Solid State Drive	802586-B21
HP 400GB 12G SAS Write Intensive SFF 2.5-in SC 3yr Wty Solid State Drive	802582-B21
HP 200GB 12G SAS Write Intensive SFF 2.5-in SC 3yr Wty Solid State Drive	802578-B21
6G SATA Value Endurance Hot Plug SFF (2.5-inch) Enterprise Boot Solid State Drives	
HP 120GB 6G SATA Value Endurance SFF 2.5-in SC Enterprise Boot 3yr Wty Solid State Drive	717965-B21
HP 80GB 6G SATA Value Endurance SFF 2.5-in SC Enterprise Boot 3yr Wty Solid State	734360-B21

Core Options

Drive	
6G SATA Value Endurance Hot Plug LFF (3.5-inch) Enterprise Boot Solid State Drives	
HP 120GB 6G SATA Value Endurance LFF 3.5-in SC Enterprise Boot 3yr Wty Solid State Drive	718171-B21
HP 80GB 6G SATA Value Endurance LFF 3.5-in SC Enterprise Boot 3yr Wty Solid State Drive	734362-B21
6G SATA Hot Plug Value Endurance LFF (3.5-inch) Converter Enterprise Value M1 Solid State Drives	
HP 800GB 6G SATA Value Endurance LFF 3.5-in SC Converter ENT Value 3yr Wty M1 Solid State Drive	764945-B21
HP 480GB 6G SATA Value Endurance LFF 3.5-in SC Converter ENT Value 3yr Wty M1 Solid State Drive	764943-B21
HP 240GB 6G SATA Value Endurance LFF 3.5-in SC Converter ENT Value 3yr Wty M1 Solid State Drive	764941-B21
HP 120GB 6G SATA Value Endurance LFF 3.5-in SC Converter ENT Value 3yr Wty M1 Solid State Drive	764939-B21
6G SATA Value Endurance Hot Plug SFF (2.5-inch) Enterprise Value Solid State Drives	
HP 1.6TB 6G SATA Value Endurance SFF 2.5-in SC Enterprise Value 3yr Wty Solid State Drive	757339-B21
HP 800GB 6G SATA Value Endurance SFF 2.5-in SC Enterprise Value 3yr Wty Solid State Drive	717973-B21
HP 600GB 6G SATA Value Endurance SFF 2.5-in SC Enterprise Value 3yr Wty Solid State Drive	739898-B21
HP 480GB 6G SATA Value Endurance SFF 2.5-in SC Enterprise Value 3yr Wty Solid State Drive	717971-B21
HP 300GB 6G SATA Value Endurance SFF 2.5-in SC Enterprise Value 3yr Wty Solid State Drive	739888-B21
HP 240GB 6G SATA Value Endurance SFF 2.5-in SC Enterprise Value 3yr Wty Solid State Drive	717969-B21
6G SATA Value Endurance Hot Plug LFF (3.5-inch) Enterprise Value Solid State Drives	
HP 1.6TB 6G SATA Value Endurance LFF 3.5-in SC Converter Enterprise Value 3yr Wty Solid State Drive	757342-B21
HP 800GB 6G SATA Value Endurance LFF 3.5-in SC Enterprise Value 3yr Wty Solid State Drive	718189-B21
HP 600GB 6G SATA Value Endurance LFF 3.5-in SC Conveter Enterprise Value 3yr Wty Solid State Drive	739900-B21
HP 480GB 6G SATA Value Endurance LFF 3.5-in SC Enterprise Value 3yr Wty Solid State Drive	718183-B21
HP 300GB 6G SATA Value Endurance LFF 3.5-in SC Converter Enterprise Value 3yr Wty Solid State Drive	739890-B21
HP 240GB 6G SATA Value Endurance LFF 3.5-in SC Enterprise Value 3yr Wty Solid State Drive	718177-B21
6G SATA Hot Plug Light Endurance SFF (2.5-inch) Enterprise Light G1 Solid State Drives	
HP 960GB 6G SATA Light Endurance SFF 2.5-in SC Enterprise Light 3yr Wty G1 Solid State Drive	756601-B21

Core Options

6G SATA Hot Plug Light Endurance LFF (3.5-inch) Enterprise Light G1 Solid State Drives	
HP 960GB 6G SATA Light Endurance LFF 3.5-in SC Converter ENT Light 3yr Wty G1 Solid State Drive	756604-B21
6G SATA Value Endurance Hot Plug SFF (2.5-inch) Enterprise Value M1 Solid State Drive	
HP 800GB 6G SATA Value Endurance SFF 2.5-in SC Enterprise Value 3yr Wty M1 Solid State Drive	764929-B21
HP 480GB 6G SATA Value Endurance SFF 2.5-in SC Enterprise Value 3yr Wty M1 Solid State Drive	764927-B21
HP 240GB 6G SATA Value Endurance SFF 2.5-in SC Enterprise Value 3yr Wty M1 Solid State Drive	764925-B21
HP 120GB 6G SATA Value Endurance SFF 2.5-in SC Enterprise Value 3yr Wty M1 Solid State Drive	764923-B21
6G SATA Mainstream Endurance Hot Plug SFF (2.5-inch) Enterprise Mainstream Solid State Drives	
HP 800GB 6G SATA Mainstream Endurance SFF 2.5-in SC Enterprise Mainstream 3yr Wty Solid State Drive	691868-B21
HP 400GB 6G SATA Mainstream Endurance SFF 2.5-in SC Enterprise Mainstream 3yr Wty Solid State Drive	691866-B21
HP 200GB 6G SATA Mainstream Endurance SFF 2.5-in SC Enterprise Mainstream 3yr Wty Solid State Drive	691864-B21
HP 100GB 6G SATA Mainstream Endurance SFF 2.5-in SC Enterprise Mainstream 3yr Wty Solid State Drive	691862-B21
6G SATA Mainstream Endurance Hot Plug LFF (3.5-inch) Enterprise Mainstream Solid State Drives	
HP 800GB 6G SATA Mainstream Endurance LFF 3.5-in SC Enterprise Mainstream 3yr Wty Solid State Drive	691860-B21
HP 400GB 6G SATA Mainstream Endurance LFF 3.5-in SC Enterprise Mainstream 3yr Wty Solid State Drive	691856-B21
HP 200GB 6G SATA Mainstream Endurance LFF 3.5-in SC Enterprise Mainstream 3yr Wty Solid State Drive	691854-B21
HP 100GB 6G SATA Mainstream Endurance LFF 3.5-in SC Enterprise Mainstream 3yr Wty Solid State Drive	691852-B21
6G SATA Hot Plug SFF (2.5-inch) SC Read Intensive Solid State Drives	
HP 960GB 6G SATA Read Intensive SFF 2.5-in SC 3yr Wty Solid State Drive	789155-B21
HP 480GB 6G SATA Read Intensive SFF 2.5-in SC 3yr Wty Solid State Drive	789145-B21
HP 240GB 6G SATA Read Intensive SFF 2.5-in SC 3yr Wty Solid State Drive	789135-B21
6G SATA Hot Plug LFF (3.5-inch) SC Read Intensive Solid State Drives	
HP 960GB 6G SATA Read Intensive LFF 3.5-in SC Converter 3yr Wty Solid State Drive	789157-B21
HP 480GB 6G SATA Read Intensive LFF 3.5-in SC Converter 3yr Wty Solid State Drive	789147-B21
HP 240GB 6G SATA Read Intensive LFF 3.5-in SC Converter 3yr Wty Solid State Drive	789137-B21

NOTE: Please see the QuickSpecs for Technical Specifications and additional information:
http://h18000.www1.hp.com/products/quickspecs/14038_na/14038_na.html (Worldwide)

Hard Drive Kits

NOTE: All Factory Integrated Models will be populated with sufficient hard drive blanks based on the number of initial hard drives ordered with the server.

Core Options

	HP 2nd Media Bay Cage Kit	661618-B21
	HP 5U 6 Large Form Factor (LFF) Hot Plug Drive Cage Kit	659485-B21
	HP 5U 8 Small Form Factor (SFF) Hot Plug Drive Cage Kit	659484-B21
	HP 5U 6 LFF Expander Hard Drive Cage Kit	661717-B21
	HP 5U 8 SFF Expander Hard Drive Cage Kit	661714-B21
	HP Small Form Factor Hard Drive Blank Kit	666987-B21
	HP Large Form Factor Hard Drive Blank Kit	666986-B21
	NOTE: Mixing of SFF and LFF drive cages is not allowed. **NOTE:** Additional Hot Plug Drive Cages require a separate Smart Array controller for each drive cage. HP recommends the HP Smart Array P420/1GB FBWC 6Gb 2-ports Int SAS Controller (P/N 631670-B21). **NOTE:** Expander HDD Cage Kit allows up to 18 LFF / 24 SFF HDDs managed under one single controller. The controller must have a minimum of 512MB FBWC module installed.	
HP Networking	**Gigabit Ethernet adapters**	
	HP NC112T PCI Express Gigabit Server Adapter	503746-B21
	HP NC365T 4-port Ethernet Server Adapter	593722-B21
	HP Ethernet 1Gb 4-port 331T Adapter	647594-B21
	HP Ethernet 1Gb 2-port 332T Adapter	615732-B21
	HP Ethernet 1Gb 2-port 361T Adapter	652497-B21
	10 Gigabit Ethernet adapters	
	HP NC523SFP 10Gb 2-port Server Adapter	593717-B21
	HP Ethernet 10Gb 2-port 530SFP Adapter	652503-B21
	HP Ethernet 10Gb 2-port 530T Adapter	656596-B21
	HP NC552SFP 10Gb 2-port Ethernet Server Adapter	614203-B21
	HP Ethernet 10Gb 2-port 560SFP+ Adapter	665249-B21
	HP Ethernet 10Gb 2-port 561T Adapter	716591-B21
	NOTE: Please see the QuickSpecs for Technical Specifications and additional information: http://www.hp.com/go/ProLiantNICs	
HP InfiniBand	QLogic InfiniBand 4X QDR PCI-E G2 Dual Port HCA	583211-B21
	HP InfiniBand FDR 2-port 545QSFP Adapter	702211-B21
	NOTE: Please see the QuickSpecs for additional information: http://h18000.www1.hp.com/products/quickspecs/13078_na/13078_na.html	
HP Power Supplies	**NOTE:** Mixing of power supplies in the same server is not supported. All power supplies inside a server must be exactly the same model. Mixing Gold, Platinum, and Platinum Plus certified power supplies is not supported. **NOTE:** Prior to making a power supply selection it is highly recommended that the HP Power Advisor is run to determine the right size power supply for your server configuration. The HP Power Advisor is located at: http://www.hp.com/go/hppoweradvisor	
	HP Common Slot Platinum Plus Power Supply Kits **NOTE:** The following Power Supplies offer 94% Efficiency with support for Intelligent Power Discovery.	
	HP 460W Common Slot Platinum Plus Hot Plug Power Supply Kit	656362-B21
	HP 750W Common Slot Platinum Plus Hot Plug Power Supply Kit	656363-B21

Core Options

	HP 1200W Common Slot Platinum Plus Hot Plug Power Supply Kit	656364-B21
	HP Common Slot Gold Power Supplies **NOTE:** The following Power Supplies offer up to 92% efficiency.	
	HP 460W CS Gold Ht Plg Power Supply Kit	503296-B21
	HP 750W Common Slot Gold Hot Plug Power Supply Kit	512327-B21
	HP Common Slot -48VDC Power Supplies	
	HP 750W Common Slot -48VDC Hot Plug Power Supply Kit **NOTE:** The HP 750W Common Slot -48VDC power supply does not ship with a power cable. It has been designed with a terminal block connection allowing for custom design of power cords by the user. **NOTE:** Option Kits for AC power supplies include the power supply and one PDU IEC cable. **NOTE:** Power Specification and Technical Content for supported power supplies can be found at: http://h18000.www1.hp.com/products/quickspecs/14209_na/14209_na.html	636673-B21
HP Cooling Options	HP Hot Plug Redundant Fan Kit	659486-B21

Additional Options

NOTE: Some options may not be integrated at the factory. To ensure only valid configurations are ordered, HP recommends the use of an HP approved configurator. Contact your local sales representative for additional information.

HP Insight Software	**HP Insight Control**	
	HP Insight Control including 1yr 24x7 Technical Support and Updates Single Server License	C6N27A
	HP Insight Control Environment No Media 1 Server incl 1 year 24x7 Supp License/S-Buy	C6N27S
	HP Insight w/Microsoft System Center Essentials 2010 ROK w/1yr Physical 1 Server SW	C6N28ASE
	HP Insight Control Server Provisioning Media Kit	BD883A
	HP Insight Management Media Kit	C6N31A
	NOTE: Electronic and Flexible-Quantity licenses can be used to purchase multiple licenses with a single activation key. **NOTE:** Customer will receive a license entitlement certificate. The license entitlement certificate must be redeemed online or via fax in order to obtain the license activation key(s). Includes one year of 24 x 7 HP Software Technical Support and Update Service. **NOTE:** Licenses ship without media. The HP Insight Control Media Kit can be ordered separately, or can be downloaded at: http://www.hp.com/go/insightupdates. **NOTE:** For additional license options please see the QuickSpecs at: http://h18000.www1.hp.com/products/quickspecs/12631_na/12631_na.html	
	HP Integrated Lights-Out (iLO) Advanced for ProLiant	
	HP iLO Advanced including 1yr 24x7 Technical Support and Updates Single Server License	512485-B21
	HP iLO Advanced 1 Server License with 3yr 24x7 Tech Support and Updates	BD505A
	NOTE: For additional license options please see the QuickSpecs at: http://h18004.www1.hp.com/products/quickspecs/14276_na/14276_na.html **NOTE:** For more information, visit: http://www.hp.com/go/ilo	
High Performance Clusters	**HP Insight Cluster Management Utility**	
	HP Insight Cluster Management Utility 1yr 24x7 Flexible License	QL803B
	HP Insight Cluster Management Utility 3yr 24x7 Flexible License	BD476A
	NOTE: These part numbers can be used to purchase one certificate for multiple licenses and support with a single activation key. Each license is for one node (server). Customer will receive a printed end user license agreement and license entitlement certificate via physical shipment. The license entitlement certificate must be redeemed online in order to obtain a license key. Customer also will receive a support agreement.	
	HP Insight Cluster Management Utility Media	BD477A
	NOTE: For additional license kits please see the QuickSpecs at: http://h18004.www1.hp.com/products/quickspecs/12612_na/12612_na.html	
HP I/O Accelerator Options	**Second Generation Accelerators**	
	HP 365GB Multi Level Cell G2 PCIe ioDrive2 for ProLiant Servers	673642-B21
	HP 785GB Multi Level Cell G2 PCIe ioDrive2 for ProLiant Servers	673644-B21
	HP 1205GB Multi Level Cell G2 PCIe ioDrive2 for ProLiant Servers	673646-B21
	HP 2410GB Multi Level Cell G2 PCIe ioDrive2 Duo for ProLiant Servers	673648-B21
	HP 3TB G2 FH/HL PCIe ioDrive2 IO Accelerator for ProLiant Servers	721458-B21

Additional Options

NOTE: Please see the QuickSpecs for Technical Specifications and additional information:
http://h18000.www1.hp.com/products/quickspecs/13587_na/13587_na.html

HP PCIe Workload Accelerator Options	**Mainstream Endurance (ME) PCIe Workload Accelerators**	
	HP 1.4TB HH/HL Mainstream Endurance (ME) PCIe Workload Accelerator	729307-B21
	HP 700GB HH/HL Mainstream Endurance (ME) PCIe Workload Accelerator	729305-B21
	High Endurance (HE) PCIe Workload Accelerators	
	HP 700GB HH/HL High Endurance (HE) PCIe Workload Accelerator	708090-B21
	HP 350GB HH/HL High Endurance (HE) PCIe Workload Accelerator	708088-B21
	Light Endurance (LE) PCIe Workload Accelerators	
	HP 5.2TB FH/HL Light Endurance (LE) PCIe Workload Accelerator	775672-B21
	HP 2.6TB HH/HL Light Endurance (LE) PCIe Workload Accelerator	775670-B21
	HP 1.3TB HH/HL Light Endurance (LE) PCIe Workload Accelerator	775668-B21
	HP 1.0TB HH/HL Light Endurance (LE) PCIe Workload Accelerator	775666-B21
	NOTE: Please see the QuickSpecs for Technical Specifications and additional information: http://h18000.www1.hp.com/products/quickspecs/14528_na/14528_na.html	
HP Computation and Graphics Accelerators	**NOTE:** Only the below listed Graphics cards are HP standard supported options in this server. **NOTE:** The ML350p Gen8 supports up to 3 graphic cards. HP Graphic Card Support Kit (660582-B21) will be required per Graphic Card. **NOTE:** Please see the HP Power Advisor for estimated power consumption of your individual system configuration prior to installing GPUs. The HP Power Advisor is located at: http://www.hp.com/go/hppoweradvisor.	
	HP Graphic Card Support Kit	660582-B21
	NVIDIA Quadro K2000 PCIe Graphics Adapter	753959-B21
	NVIDIA Quadro K4000 PCI-E Graphics Adapter	730870-B21
	NVIDIA Quadro K5000 PCI-E Graphics Adapter	730872-B21
	NVIDIA Quadro K6000 PCI-E Graphics Adapter	730874-B21
	NVIDIA Tesla K40C 12GB Computational Accelerator	753960-B21
	NOTE: Min/Max rule does not apply to this option. However maximum of Three HP Graphic Card Support Kit can be selected. This Graphic Card Support Kit must be selected along with Graphic cards only. **NOTE:** For all NVIDIA cards, OS support is for 64-bit versions only; Red Hat Enterprise Linux Server Editions 5.x & 6.x, SUSE Linux Enterprise Server Edition SLES11 SPx, Windows Server 2012 R2	
HP Security	HP Trusted Platform Module Option	488069-B21
	NOTE: The TPM (Trusted Platform Module) is a microcontroller chip that can securely store artifacts used to authenticate the server platform. These artifacts can include passwords, certificates and encryption keys. Windows® BitLocker™ Drive Encryption (BitLocker) is a data protection feature available in Windows Server® 2008. BitLocker leverages the enhanced security capabilities of a Trusted Platform Module (TPM) version 1.2. The TPM works with BitLocker to help protect user data and to ensure that a server running Windows Server 2008 has not been tampered with while the system was offline. For more information about TPM, including a white paper, go to: www.hp.com/go/TPM. **NOTE:** ProLiant OS pre-installed units will come with the partition required for TPM deployment.	

Additional Options

	NOTE: The TPM key is unique to every TPM deployed server and must be retained. Misplacing or losing the key could result in data loss.	
	HP Security Bezel Kit **NOTE:** For restricting access to a rack model	660584-B21
HP Secure Encryption	HP Secure Encryption No Media E-LTU per Drive **NOTE:** Global except China.	D8S85AAE
	HP Secure Encryption No Media Flexible License per Drive **NOTE:** China Only. **NOTE:** For more information about HP Secure Encryption, please visit: http://www.hp.com/go/hpsecureencryption	D8S84A
HP Storage Controllers	**SAS Controllers**	
	HP Smart Array P420 Controller	
	HP Smart Array P420/2GB FBWC 6Gb 2-ports Int SAS Controller	631671-B21
	HP Smart Array P420/1GB FBWC 6Gb 2-ports Int SAS Controller	631670-B21
	NOTE: The HP Smart Array P420 controllers are not supported in Slots 3 and 4.	
	HP Smart Array P421 Controller	
	HP Smart Array P421/2GB FBWC 6Gb 2-ports Ext SAS Controller	631674-B21
	HP Smart Array P421/1GB FBWC 6Gb 2-ports Ext SAS Controller	631673-B21
	Smart Array P430 Controller	
	HP Smart Array P430/2GB FBWC 12Gb 1-port Int SAS Controller	698529-B21
	HP Smart Array P430/4GB FBWC 12Gb 1-port Int SAS Controller	698530-B21
	NOTE: The HP Smart Array P430 controller is not supported in Slots 3 and 4.	
	Smart Array P431 Controller	
	HP Smart Array P431/2GB FBWC 12Gb 2-ports Ext SAS Controller	698531-B21
	HP Smart Array P431/4GB FBWC 12Gb 2-ports Ext SAS Controller	698532-B21
	NOTE: The HP Smart Array P431 controller is not supported in Slot 2.	
	HP Smart Array P822 Controller	
	HP Smart Array P822/2GB FBWC 6Gb 2-ports-Int/4-ports Ext SAS Controller **NOTE:** The HP Smart Array P822 controller is not supported in Slots 1,2,5,6,7,8 or 9. The controller also is not supported in Slot 3 if Slot 4 is populated with a controller.	615418-B21
	HP Smart Array P830 Controller	
	HP Smart Array P830/4GB FBWC 12Gb 2-ports Int SAS Controller	698533-B21
	Optional Upgrades	
	HP 1GB P-series Smart Array Flash Backed Write Cache	631679-B21
	HP 2GB P-series Smart Array Flash Backed Write Cache	631681-B21
	HP 512MB P-series Smart Array Flash Backed Write Cache	661069-B21
	HP SmartCache No Media 24x7 Technical Support 1 Svr License	D7S26A
	HP SmartCache No Media 24x7 Technical Support Flexible License	D7S27A
	HP SmartCache No Media 24x7 Technical Support Electronic License	D7S27AAE
	NOTE: Please see the QuickSpecs for Technical Specifications and additional information: http://h18000.www1.hp.com/products/quickspecs/14228_na/14228_na.html (Smart Array P420 Controller) http://h18000.www1.hp.com/products/quickspecs/14229_na/14229_na.html (Smart Array P421 Controller) http://h18000.www1.hp.com/products/quickspecs/14624_na/14624_na.html	

Additional Options

	(Smart Array P430 Controller) http://h18000.www1.hp.com/products/quickspecs/14625_na/14625_na.html (Smart Array P431 Controller) http://h18000.www1.hp.com/products/quickspecs/14341_na/14341_na.html (Smart Array P822 Controller) http://h18000.www1.hp.com/products/quickspecs/14744_na/14744_na.html (Smart Array P830 Controller) http://h18000.www1.hp.com/products/quickspecs/14532_na/14532_na.html (SmartCache)	
	HP Host Bus Adapters	
	HP H220 Host Bus Adapter	650933-B21
	HP H221 PCIe 3.0 SAS Host Bus Adapter	729552-B21
	HP H222 Host Bus Adapter	650926-B21
	NOTE: Please see the QuickSpecs for Technical Specifications and additional information: http://h18004.www1.hp.com/products/quickspecs/14336_na/14336_na.html (HBA 220) http://h18004.www1.hp.com/products/quickspecs/14222_na/14222_na.html (HBA 221) http://h18004.www1.hp.com/products/quickspecs/14337_na/14337_na.html (HBA 222)	
	SCSI HBA	
	HP SC11Xe Ultra320 Single Channel/ PCIe x4 SCSI Host Bus Adapter	412911-B21
	NOTE: Supports external drive attach	
	NOTE: Please see the following QuickSpecs for additional information: http://h18000.www1.hp.com/products/quickspecs/12566_na/12566_na.html	
HP Tape Backup	**NOTE:** For the complete range of tape drives, autoloaders, libraries and media see: http://www.hp.com/go/tape. For hardware and software compatibility of HP tape backup products see: http://www.hp.com/storage/SPOCK and http://www.hp.com/go/ebs. **NOTE:** Installation of tape drive requires ordering of 2nd Media Bay Cage, Part Number 661618-B21.	
	HP StoreEver LTO-6 Ultrium 6250 Tape Drive in 1U Rack-mount Kit	C0L99A
	HP StoreEver LTO-6 Ultrium 6650 SAS Internal Tape Drive	EH963A
	HP StoreEver LTO-6 Ultrium 6650 SAS External Tape Drive	EH964A
	HP StoreEver LTO-6 Ultrium 6250 Internal Tape Drive	EH969A
	HP StoreEver LTO-6 Ultrium 6250 External Tape Drive	EH970A
	HP StoreEver 1/8 G2 LTO-6 Ultrium 6250 FC Tape Autoloader	C0H19A
HP Tape Storage Systems	**HP StoreEver MSL6480**	
	HP StoreEver MSL6480 Scalable Base Module	QU625A
	NOTE: Please see the QuickSpecs for Technical Specifications and additional information: http://h18000.www1.hp.com/products/quickspecs/14604_na/14604_na.html	
HP Disk Backup	**NOTE:** For the complete range of RDX drives and media see: http://www.hp.com/go/rdx. For hardware and software compatibility of HP disk backup products see: http://www.hp.com/storage/SPOCK.	
	HP RDX Removable Disk Backup Systems USB	

Additional Options

	HP RDX320 USB3.0 External Disk Backup System	B7B63A
	HP RDX500 USB3.0 Internal Disk Backup System	B7B64A
	HP RDX500 USB 3.0 External Disk Backup System	B7B66A
	HP RDX1000 USB3.0 Internal Disk Backup System	B7B67A
	HP RDX1000 USB 3.0 External Disk Backup System	B7B69A
	NOTE: Please see the following QuickSpecs for additional models and information: http://h18000.www1.hp.com/products/quickspecs/13036_na/13036_na.html	
HP Disk Storage Systems	**Disk Enclosures**	
	HP D3600 Enclosure	QW968A
	NOTE: See the D3000 Disk Enclosure QuickSpecs for additional information including configuration steps and additional options needed for a complete solution at: http://h18000.www1.hp.com/products/quickspecs/14866_na/14866_na.html	
	HP D3700 Enclosure	QW967A
	NOTE: See the D3000 Disk Enclosure QuickSpecs for additional information including configuration steps and additional options needed for a complete solution at: http://h18000.www1.hp.com/products/quickspecs/14866_na/14866_na.html	
	HP D2600 Disk Enclosure	AJ940A
	NOTE: See the D2000 Disk Enclosure QuickSpecs for additional information including configuration steps and additional options needed for a complete solution at: http://h18000.www1.hp.com/products/quickspecs/13404_na/13404_na.html	
	HP D2700 Disk Enclosure	AJ941A
	NOTE: See the D2000 Disk Enclosure QuickSpecs for additional information including configuration steps and additional options needed for a complete solution at: http://h18000.www1.hp.com/products/quickspecs/13404_na/13404_na.html	
	HP D6000 Dual I/O Module Disk Enclosure	QQ695A
	NOTE: See the D6000 Disk Enclosure QuickSpecs for additional information including configuration steps and additional options needed for a complete solution at: http://h18000.www1.hp.com/products/quickspecs/14419_na/14419_na.html	
HP Storage Options	**NOTE:** The following is a list of all Fibre Channel Host Bus Adapters for Windows and Linux. For detailed compatibility information please see: http://h18006.www1.hp.com/storage/saninfrastructure/hba.html	
	Brocade Fibre Channel HBAs	
	NOTE: HP ProLiant ML350p Gen8 Server series limited support for Red Hat Enterprise Linux 5.7 (x86and x86_64) when installing with Brocade HBAs.	
	HP 81B 8Gb 1-port PCIe Fibre Channel Host Bus Adapter	AP769B
	HP 82B 8Gb 2-port PCIe Fibre Channel Host Bus Adapter	AP770B
	Emulex Fibre Channel HBAs	
	HP 81E 8Gb 1-port PCIe Fibre Channel Host Bus Adapter	AJ762B
	HP 82E 8Gb 2-port PCIe Fibre Channel Host Bus Adapter	AJ763B
	HP StoreFabric SN1100E 16Gb Single Port Fibre Channel Host Bus Adapter	C8R38A
	HP StoreFabric SN1100E 16Gb Dual Port Fibre Channel Host Bus Adapter	C8R39A
	QLogic Fibre Channel HBAs	
	HP 81Q 8Gb 1-port PCIe Fibre Channel Host Bus Adapter	AK344A
	HP 82Q 8Gb 2-port PCIe Fibre Channel Host Bus Adapter	AJ764A
	HP StoreFabric SN1000Q 16GB 1-port PCIe Fibre Channel Host Bus Adapter	QW971A
	HP StoreFabric SN1000Q 16GB 2-port PCIe Fibre Channel Host Bus Adapter	QW972A

Additional Options

	Converged Network Adapter	
	HP CN1000Q Dual Port Converged Network Adapter	BS668A
	HP CN1100E Dual Port Converged Network Adapter	BK835A
	HP StoreFabric CN1100R Dual Port Converged Network Adapter	QW990A
HP Uninterruptible Power Systems	**HP DirectFlow Three Phase UPS**	
	Power Unit (1U UPS)	
	NOTE: #0D1 will appear after the part number on the sales order if HP factory integration is indicated.	
	HP R12000 DirectFlow - 1U Rackmount Uninterruptible Power System	G9Y75A
	HP R12000 DirectFlow - POD 1U Rackmount Uninterruptible Power System	AF478A
	Input/Output Module Options for 1U UPS	
	NOTE: Choose one I/O Module per UPS. **NOTE**: #0D1 will appear after the part number on the sales order if HP factory integration is indicated.	
	HP 30A 400-415 Volt Three Phase NA R10000 DirectFlow UPS IEC309 Input/Output Module	AF489A
	HP 30A 480 Volt Three Phase NA R12000 DirectFlow UPS L22-30 Input/Output Module	AF491A
	HP 30A 480 Volt Three Phase NA R12000 DirectFlow UPS IEC309 Input/Output Module	AF492A
	HP 30A 400-415 Volt Three Phase NA R12000 DirectFlow UPS IEC309 Input/Output Module	G9Y76A
	NOTE: All Input/Output Modules support dual output outlets except the AF484A.	
	HP Tower UPS	
	HP T750 G4 UPS Models	
	HP T750 G4 NA/JP Uninterruptible Power System	J2P85A
	HP T1000 G4 UPS Models	
	HP T1000 G4 NA/JP Uninterruptible Power System	J2P86A
	HP T1500 G4 UPS Models	
	HP T1500 G4 NA/JP Uninterruptible Power System	J2P87A
	HP Rack/Tower UPS	
	HP R/T2200 G4 UPS Models	
	HP R/T2200 G4 NA/JP Uninterruptible Power System	J2R00A
	HP R/T3000 G4 UPS Models	
	HP R/T3000 G4 Low Voltage NA/JP Uninterruptible Power System	J2R01A
	HP R/T3000 G4 High Voltage NA/JP Uninterruptible Power System	J2R02A
	HP R1500 G4 Uninterruptible Power Supply (UPS)	
	HP R1500 G4 NA Uninterruptible Power System	J2Q99A
	R5000 Uninterruptible Power System (UPS)	
	HP R5000 3U L630 High Voltage NA/JP Uninterruptible Power System	AF460A
	NOTE: Please see the QuickSpecs for additional information: http://h18000.www1.hp.com/products/quickspecs/14109_na/14109_na.html	
	R7000 Uninterruptible Power System (UPS)	
	HP R7000 4U 50A High Voltage NA/JP Uninterruptible Power System	AF462A
	NOTE: Please see the QuickSpecs for additional information:	

Additional Options

	http://h18000.www1.hp.com/products/quickspecs/14110_na/14110_na.html **NOTE**: For additional information on sizing your HP UPS, please reference: http://www.upssizer.com **NOTE**: Please see the UPS and PDU cable matrix's on the HP Power Protection and Management page. Under Power Cords, click on the "HP Power Cord Matrix" link. That link will list cable descriptions, requirements, and specifications for UPS and PDU units. Please see the following link: http://www.hp.com/products/powercords. **NOTE**: For additional information on HP Uninterruptible Power Systems please go to: www.hp.com/servers/rackups.	
HP Basic Power Distribution Units (bPDU)	**HP Basic Power Distribution Unit: 1U/0U Version**	
	HP 1.9kVA 120 Volt L5-20 Input (12xNEMA 5-20R) NA/JP Basic PDU	H5M54A
	HP 3.6kVA 200-240 Volt Detachable C20 Input (12xC13) WW Basic PDU	H5M56A
	HP Basic Power Distribution Unit: Half Height Version	
	HP 2.8kVA 120 Volt L5-30 Input (18xNEMA 5-20R) NA/JP Basic PDU	H5M55A
	HP 3.6kVA 200-240 Volt Detachable C20 Input (18xC13) WW Basic PDU	H5M57A
	HP 4.9kVA 208 Volt L6-30 Input (20xC13) NA/JP Basic PDU	H5M58A
	HP 8.6kVA 208 Volt L15-30 3-Phase Input (18xC13) NA/JP Basic PDU	H5M61A
	HP Basic Power Distribution Unit: Mid Height Version	
	HP 4.9kVA 208 Volt L6-30 Input (24xC13/6xC19) NA/JP Basic PDU	H5M59A
	HP 8.3kVA 208 Volt CS8265C Input (30xC13/6xC19) NA/JP Basic PDU	H5M60A
	HP Hardwired 200-240 Volt Input (30xC13/6xC19) WW Basic PDU	H5M75A
	HP 5.7kVA 208 Volt L21-20 3-Phase Input (24xC13/3xNEMA 5-20R) NA/JP Basic PDU	H5M63A
	HP 8.6kVA 208 Volt L21-30 3-Phase Input (24xC13/3xC19/3xNEMA 5-20R) NA/JP Basic PDU	H5M64A
	HP 8.6kVA 208 Volt L15-30 3-Phase Input (24xC13/6xC19) NA/JP Basic PDU	H5M62A
	HP Basic Power Distribution Unit: Full Height Version	
	HP 11kVA 400 Volt IEC309 30A 3-Phase Input (36xC13/6xC19) NA Basic PDU	H5M67A
	HP Basic Power Distribution Unit: 480/277 Volt Version	
	HP 19.9kVA 480 Volt IEC309 30A 3-Phase Input (30 Outlet) NA Basic PDU	H3X08A
	HP 800VA - 277V Input / 230V Output NA Rack Mount Transformer	H3X09A
	NOTE: Please see the QuickSpecs for Technical Specifications and additional information: http://h18000.www1.hp.com/products/quickspecs/14557_na/14557_na.html **NOTE:** Additional HP Power Distribution Units are available. For a complete list of all HP PDUs and additional information please visit http://www.hp.com/go/rackandpower.	
HP Remote Monitored Power Distribution Units (mPDU)	**HP Remote Monitored Power Distribution Unit: 1U Version**	
	HP 2.8kVA 120 Volt L5-30 Input (12xNEMA 5-20R)NA/JP Monitored PDU	D9N43A
	HP 3.6kVA 200-240 Volt Detachable C20 Input (12xC13) WW Monitored PDU	D9N46A
	HP 4.9kVA 208 Volt L6-30 Input (12xC13) NA/JP Monitored PDU	D9N44A
	HP Remote Monitored Power Distribution Unit: Half Height Version	
	HP 3.6kVA 200-240 Volt Detachable C20 Input (16xC13) WW Monitored PDU	D9N45A
	HP 4.9kVA 208 Volt L6-30 Input (12xC13) NA/JP Monitored PDU	G9Z05A
	HP 7.3kVA 230 Volt IEC309 32A Input (12xC13) INTL Monitored PDU	G9Z06A
	HP Remote Monitored Power Distribution Unit: Mid Height Version	

Additional Options

	HP 4.9kVA 208 Volt L6-30 Input (20xC13/4xC19) NA/JP Monitored PDU	D9N47A
	HP 8.6kVA 208 Volt L15-30 3-Phase Input (18xC13/3xC19) NA/JP Monitored PDU	D9N51A
	HP 5.7kVA 208 Volt L21-20 3-Phase Input (18xC13/3xNEMA 5-20R) NA/JP Monitored PDU	D9N52A
	HP 8.6kVA 208 Volt L21-30 3-Phase Input (20xC13/3xC19/3xNEMA 5-20R) NA/JP Monitored PDU	D9N53A
	HP Remote Monitored Power Distribution Unit: Full Height Version	
	HP 8.3kVA 208 Volt CS8265C Input (30xC13/3xC19) NA Monitored PDU	D9N49A
	HP 14.4kVA 208 Volt CS8365C 3-Phase Input (12xC13/12xC19)NA Monitored PDU	D9N58A
	HP 16.6kVA 400 Volt IEC309 30A 3-Phase Input (30xC13/3xC19) NA Monitored PDU	D9N61A
	HP 16.6kVA 400 Volt IEC309 30A 3-Phase Input (12xC13/12xC19) NA Monitored PDU	D9N62A
	HP 17.3kVA 208 Volt IEC309 60A 3-Phase Input (24xC13/3xC19) NA/JP Monitored PDU	D9N54A
	HP 17.3kVA 208 Volt IEC309 60A 3-Phase Input (12xC13/12xC19) NA/JP Monitored PDU	D9N59A
	HP 17.3kVA 208 Volt IEC309 60A 3-Phase Watertight Input (12xC13/12xC19) NA/JP Monitored PDU	G9Z07A
	HP 19.9kVA 480 Volt 3-Phase (30 Outlet) NA Monitored PDU	D9N63A
	HP Environmental Sensor for Remote Monitored PDUs	
	HP Environmental Sensor for Remote Monitored and Managed PDUs	E2D53A
	NOTE: Please see the QuickSpecs for additional information: http://h18000.www1.hp.com/products/quickspecs/14669_na/14669_na.html	
HP Intelligent Power Distribution Units (iPDU)	**iPDU Core Units**	
	HP 4.9kVA 24A Single Phase NA/JP Core Intelligent Modular Power Distribution Unit	AF520A
	HP 8.3kVA 40A Single Phase NA/JP Core Intelligent Modular Power Distribution Unit	AF521A
	HP 8.6kVA 24A Three Phase NA/JP Core Intelligent Modular Power Distribution Unit	AF522A
	HP 14.4kVA 40A Three Phase NA/JP Intelligent Modular Power Distribution Unit	AF533A
	HP 17.3kVA 48A Three Phase NA/JP Core Intelligent Modular Power Distribution Unit	AF523A
	HP 17.3kVA 48A 208V Three Phase 12 Outlet Core NA/JP Intelligent Power Distribution Unit	AF535A
	HP 17.3kVA 24A 415V Three Phase 12 Outlet Core NA/JP Intelligent Power Distribution Unit	AF537A
	iPDU Kits with Standard Extension Bars	
	HP 4.9kVA 24A Single Phase NA/JP Intelligent Modular Power Distribution Kit	AF531A
	HP 8.6kVA 24A Three Phase NA/JP Intelligent Modular Power Distribution Kit	AF532A
	iPDU Extension Bars	
	HP 5xC13 Intelligent PDU Extension Bar G2 Kit	AF547A
	HP 5xC13 Outlets Power and UID LEDs Pair Standard Extension Bar	AF528A
	NOTE: Please see the QuickSpecs for Technical Specifications and additional information: http://h18000.www1.hp.com/products/quickspecs/13650_na/13650_na.html (Worldwide) **NOTE:** Additional HP Power Distribution Units are available. For a complete list of all HP PDUs and additional information please visit: http://www.hp.com/go/rackandpower.	
HP Managed Power	**Half Height Models**	

Additional Options

Distribution Units (maPDU)	HP 3.6kVA 200-240 Volt Detachable C20 Input (7xC13/1xC19) WW Managed PDU	H8B49A
	Full Height Models	
	HP 2.8kVA 120 Volt L5-30 Input (24x NEMA 5-20) NA/JP Managed PDU	H8B48A
	HP 4.9kVA 208 Volt L6-30 Input (20xC13/4xC19) NA/JP Managed PDU	H8B50A
	HP 7.3kVA 200-240 Volt IEC309 32A Input (20xC13/4xC19) INTL Managed PDU	H8B51A
	HP 8.6kVA 208 Volt L15-30 3 Phase Input (18xC13/6xC19) NA/JP Managed PDU	H8B52A
	HP 8.6kVA 208 Volt L21-30 3 Phase Input (20xC13/3xC19/1x NEMA 5-20) NA/JP Managed PDU	H8B53A
	HP 11kVA 400 Volt IEC309 16A 3 Phase Input (21xC13/3xC19) INTL Managed PDU	H8B54A
	HP 14.4kVA 208V CS8365C 3 Phase Input (12xC13/12xC19) NA/JP Managed PDU	H8B55A
	HP 17.3kVA 208V IEC309 60A 3 Phase Input (12xC13/12xC19) NA/JP Managed PDU	H8B56A
	NOTE: Please see the QuickSpecs for Technical Specifications and additional information: http://www8.hp.com/h20195/v2/GetHtml.aspx?docname=c04376673 (Worldwide)	
HP Rack Series	**HP Intelligent Series Rack**	
	HP 636 1075mm Pallet Intelligent Rack	BW895A
	HP 636 1075mm Shock Intelligent Rack	BW896A
	HP 642 1075mm Pallet Intelligent Rack	BW903A
	HP 642 1075mm Shock Intelligent Rack	BW904A
	HP 647 1075mm Pallet Intelligent Rack	BW911A
	HP 647 1075mm Shock Intelligent Rack	BW912A
	NOTE: Please see the QuickSpecs for Technical Specifications such as height, width, depth, weight, and color: http://h18000.www1.hp.com/products/quickspecs/14223_na/14223_na.html **NOTE:** For additional information regarding Rack Cabinets, please see the following URL: http://www.hp.com/go/rackandpower.	
HP Rack Options	**HP LCD8500 1U Rackmount Console Kit Models**	
	HP LCD8500 1U US Rackmount Console Kit	AF630A
	HP LCD8500 1U US TAA Rackmount Console Kit	AF645A
	HP Location Discovery Services	
	HP 36U Location Discovery Kit	BW945A
	HP 42U Location Discovery Kit	BW946A
	HP 47U Location Discovery Kit	BW947A
	HP LCD8500 1U Rackmount Console Kit Options	
	HP Kit LCD 1.83m Latch Display Port Cable	G7T29A
	HP Location Discovery Services LCD8500 Kit	TL052A
	HP Rack LED Light Kit	BW939A
	NOTE: Please see the QuickSpecs for Technical Specifications and additional information: http://h18000.www1.hp.com/products/quickspecs/14429_na/14429_na.html	
	HP USB Keyboard and Mouse	
	HP USB BFR with PVC Free US Keyboard/Mouse Kit	631341-B21
	NOTE: Please see the QuickSpecs for Technical Specifications and additional information:	

Additional Options

	http://h18000.www1.hp.com/products/quickspecs/13792_na/13792_na.html	
	HP Server Console Switches	
	HP 0x1x8 G3 KVM Console Switch	AF651A
	HP 0x2x16 G3 KVM Console Switch	AF652A
	HP TAA 0x2x16 G3 KVM Console Switch	AF653A
	HP USB Remote Access Key for G3 KVM Console Switches	AF650A
	NOTE: Please see the QuickSpecs for Technical Specifications and additional information: http://h18000.www1.hp.com/products/quickspecs/11834_na/11834_na.html	
	HP Server Console Switch G2 with Virtual Media & CAC	
	HP 0x2x16 KVM Server Console Switch G2 with Virtual Media CAC Software	AF618A
	HP 0x2x32 KVM Server Console Switch G2 with Virtual Media CAC Software	AF619A
	KVM USB Cnsl Itfc Adapter 1PK ALL	336047-B21
	NOTE: Please see the QuickSpecs for Technical Specifications and additional information: http://h18000.www1.hp.com/products/quickspecs/13475_na/13475_na.html	
	HP IP Console Switch G2 with Virtual Media & CAC	
	HP 1x4 USB/PS2 KVM Console Switch	AF611A
	HP 1x1Ex8 KVM IP Console Switch G2 with Virtual Media CAC Software	AF620A
	HP 2x1Ex16 KVM IP Console Switch G2 with Virtual Media CAC Software	AF621A
	HP 4x1Ex32 KVM IP Console Switch G2 with Virtual Media CAC Software	AF622A
	NOTE: Please see the QuickSpecs for Technical Specifications and additional information: http://h18000.www1.hp.com/products/quickspecs/13474_na/13474_na.html	
	Rack Kits	
	HP Tower to Rack Conversion Tray Kit	659488-B21
HP USB and SD Options	**HP Flash Media Kits for USB Drives**	
	NOTE: HP qualified blank USB key for use with HP ProLiant servers that support the VMware virtualization environment and other HP value-add software. HP recommends this industry standard USB flash device for use with VMware ESXi. USB device must be installed in the internal slot of the ProLiant server for use with VMware ESXi. Refer to HP VMware Getting Started Guide for installation instructions	
	HP 8GB USB Enterprise Mainstream Flash Media Drive Key Kit	737953-B21
	HP Enterprise Performance Flash Media Kits for Memory Cards	
	HP 32GB SD Enterprise Mainstream Flash Media Kit	700136-B21
	HP Enterprise Mainstream Flash Media Kits for Memory Cards	
	HP 8GB SD Enterprise Mainstream Flash Media Kit	726113-B21
	NOTE: Blank SD media device is supported for use with VMware and Citrix. SD media must be installed in the internal slot of the ProLiant server. Learn more at: http://www.hp.com/go/proliantvirtualization. **NOTE:** Please see the QuickSpecs for Technical Specifications and additional information: http://h18000.www1.hp.com/products/quickspecs/13971_na/13971_na.html	
HP Care Pack Services	**Proactive Care**	
	NOTE: Collaborative Support plus Proactive services delivered by the onshore, local language Advanced Solution Center (ASC), end-to-end case ownership from a Technical Solution Specialists and Technical Account Manager who remotely	

Additional Options

delivers firmware/software revision management, proactive scans and incident trend reports. Recommended for customers running a virtualized infrastructure and/or customers who desire an enhanced call support experience.

HP 3 year 4 hour 24x7 ProLiant ML350(p) Proactive Care Service	U3A78E
HP 3 year 4 hour 24x7 with Defective Media Retention ProLiant ML350(p) Proactive Care Service	U3A81E
HP 3year 4-Hour 24x7 with Comprehensive Defective Material Retention ML350(p) ProactiveCare Service	U9E67E
HP 3 year 6 hour Call To Repair 24x7 ProLiant ML350(p) Proactive Care Service	U3A84E
HP 3 year 6 hourCallToRepair 24x7 withDefective Media Retention ProLiant ML350(p) Proactive Care SVC	U3A87E
HP 3year 24x7 6-HourCall-to-repair ComprehensiveDefectiveMaterialRetention ML350(p) ProactiveCareSVC	U9E70E
HP 3 year 4 hour 24x7 ProLiant ML350(p) with Insight Control Proactive Care Service	U3N77E
HP 3 year 4hr 24x7 with Defective Media Retention ML350(p) with Insight Control Proactive Care SVC	U3N80E
HP 3year 4-Hour 24x7 Comprehensive Defective Material Retention ML350(p) w/IC ProactiveCare Service	U9E85E
HP 3 year 6 hour Call To Repair 24x7 ProLiant ML350(p) with Insight Control Proactive Care Service	U3N83E
HP 3yr 6hrCallToRepair 24x7w/Defective Media Retention ML350(p) w/Insight Control Proactive Care SVC	U3N86E
HP 3year 24x7 6-HourCalltorepair ComprehensiveDefectiveMaterialRetention ML350(p)IC ProactiveCareSVC	U9E88E

Installation Services

NOTE: Reduce the time required to get your system up and running and help minimize disruptions to your business.

HP Install ProLiant ML350(p) Service	U4522E
HP Startup ProLiant ML350(p) Service	U4523E

NOTE: For more information, customer/resellers can contact: http://www.hp.com/services/carepack

Memory

NOTE: Memory configurations listed do not apply to "Factory Integrated Models".

DDR3 memory population guidelines

For detailed memory configuration rules and guidelines, please use the Online DDR3 Memory Configuration Tool:
http://www.hp.com/go/ddr3memory-configurator

General Guidelines:

- White DIMM slots denote the first slot of a channel. For 1 DPC (DIMM per channel) populate white slots only.
- Install DIMMs only if the corresponding processor is installed.
- If only one processor is installed in a two processor system, only half of the DIMM slots are available.
- To maximize performance, balance the total memory capacity between all installed processors
  - Populate DIMMs from heaviest load (quad-rank) to lightest load (single-rank) within a channel
  - Heaviest load (DIMM with most ranks) within a channel goes furthest from the processor
- Do not mix UDIMMs, RDIMMs or LRDIMMs
- Quad rank LR DIMMs are supported at 3 DIMMs per channel.
- DIMMs of different voltages (1.35V & 1.5V) may be mixed in any order
  - The system will power them at the higher voltage
- DIMMs of different speed grades may be mixed in any order
  - The system will select a common optimal speed
- Memory speed is a function of the processor QPI bus speed.

Population Guidelines:

- There are four (4) channels per processor; eight (8) channels per server
- There are three (3) DIMM slots for each memory channel; twenty-four (24) total slots
- Memory channels1 and 3 consists of the three (3) DIMMs that are furthest from the processor
- Memory channel 2 and 4 consists of the three (3) DIMMs that are closest to the processor

ML350p Gen8-IVB Supported Memory Bandwidth and Capacity -- Treaty															
DIMM Type	**Registered DIMMS (RDIMMs)**								**Load Reduced (LRDIMMs)**	**Unbuffered with ECC DIMMs (UDIMMs)**					
DIMM Rank	**Single Rank (1R)**				**Dual Rank (2R)**				**Quad Rank (4R)**	**Single Rank (1R)**		**Dual Rank (2R)**			
DIMM Capacity	4GB	4GB	8GB	8GB	8GB	8GB	16GB	16GB	32GB	2GB	2GB	4GB	4GB	8GB	8GB
DIMM Native Speed (MHz)	1600	1866	1600	1866	1600	1866	1600	1866	1866	1600	1866	1600	1866	1600	1866
Voltage	LV	Std	LV	Std	LV	Std	LV	Std	Std	LV	Std	LV	Std	LV	Std
SLOTS THAT CAN BE POPULATED															
24 slot servers	24	24	24	24	24	24	24	24	24	16	16	16	16	16	16
MAXIMUM CAPACITY (GB)*															
24 slot servers	96	96	192	192	192	192	384	384	768	32	32	64	64	128	128

Memory

POPULATED DIMM SPEED (MHz)															
1 DIMM Per Channel	1600	1866	1600	1866	1600	1866	1600	1866	1866**	1600	1866	1600	1866	1600	1866
2 DIMM Per Channel	1600	1866	1600	1866	1600	1866	1600	1866	1866**	1600	1866****	1600	1866****	1600	1866****
3 DIMM Per Channel	800	1333	800	1333	800	1333	800	1333	1333***	n/a	n/a	n/a	n/a	n/a	n/a

NOTES:
Memory speed is a function of the processor QPI bus speed.
To realize the performance memory capabilities listed above HP SmartMemory is required.
* Maximum capacity will vary based on individual server platform qualification schedule
** For HP SmartMemory RDIMM supports up to 3DPC@1066 at 1.35V. Third party memory may only support up to 3DPC@1066 at 1.5V.
*** LRDIMM enables 3 DIMMs per channel. HP SmartMemory will supports up to 3DPC@DDR3-1066 at 1.35V. Third party memory may only support 3DPC @DDR3-1066 at 1.5V.
**** For HP SmartMemory, UDIMM is, supported at 2DPC@1333. Third party memory may only support up to 2DPC@1066.
RBSU setting required

ML350p Gen8- Xeon® E5-2XXX **Supported Memory Bandwidth and Capacity**														
DIMM Type	**Registered DIMMS (RDIMMs)**							**Load Reduced (LRDIMMs)**	**Unbuffered with ECC DIMMs (UDIMMs)**					
DIMM Rank	**Single Rank (1R)**			**Dual Rank (2R)**				**Quad Rank (4R)**	**Single Rank (1R)**		**Dual Rank (2R)**			
DIMM Capacity	4GB	4GB	8GB	8GB	8GB	16GB	16GB	32GB	2GB	2GB	4GB	4GB	8GB	8GB
DIMM Native Speed (MHz)	1333	1600	1600	1333	1600	1333	1600	1333	1333	1600	1333	1600	1333	1600
Voltage	LV	Std	Std	LV	Std	LV	Std	LV	LV	Std	LV	Std	LV	Std
SLOTS THAT CAN BE POPULATED														
24 slot servers	24	24	24	24	24	24	24	24	16	16	16	16	16	16
MAXIMUM CAPACITY (GB)*														
24 slot servers	96	96	192	192	192	384	384	768	32	32	64	64	128	128
POPULATED DIMM SPEED (MHz)														
1 DIMM Per Channel	1333	1600	1600	1333	1600	1333	1600	1333**	1333	1600	1333	1600	1333	1600
2 DIMM Per Channel	1333	1600	1600	1333	1600	1333	1600	1333**	1333***	1600	1333***	1600	1333***	1600
3 DIMM Per	1066**	1333##	1333##	1066**	1333##	1066**	1333##	1066	n/a	n/a	n/a	n/a	n/a	n/a

Memory

Channel														

NOTES:
Memory speed is a function of the processor QPI bus speed.
To realize the performance memory capabilities listed above HP SmartMemory is required.
* Maximum capacity will vary based on individual server platform qualification schedule
** LRDIMM enables 3 DIMMs per channel. HP SmartMemory will supports up to 3DPC@DDR3-1066 at 1.35V. Third party memory may only support 3DPC @DDR3-1066 at 1.5V.
*** For HP SmartMemory, UDIMM is, supported at 2DPC@1333. Third party memory may only support up to 2DPC@1066.

Memory Speed by Processor Model

Processor Models	Supported Memory Speeds
E5-2680, E5-2670, E5-2667, E5-2665, E5-2660, E5-2650, E5-2650L, E5-2637	1600/1333/1066MHz
E5-2640, E5-2630, E5-2630L, E5-2620	1333/1066MHz
E5-2609, E5-2603	1066MHz
E5-2697 v2, E5-2690 v2, E5-2670 v2, E5-2667 v2, E5-2650 v2, E5-2643 v2, E5-2637 v2	1866/1600/1333/1066MHz
E5-2640 v2, E5-2630 v2, E5-2630L v2, E5-2620 v2	1600/1333/1066MHz
E5-2609 v2, E5-2603 v2	1333/1066MHz

Standard and Maximum Memory Capacity (Pre-configured Models)

Pre Configured Models	Standard Memory	Maximum Memory Plus Optional Memory	Standard Memory Replaced with Optional Memory
Intel Xeon E5-2640	16GB (4x 4GB)	336GB (20x16GB, 4x4GB)	768GB (24 x 32GB)
Intel Xeon E5-2620	8GB (2x 4GB)	360GB (22x16GB, 2x4GB)	768GB (24 x 32GB)
Intel Xeon E5-2603	4GB (1x 4GB)	372GB (23x16GB, 1x4GB)	768GB (24 x 32GB)
Intel Xeon E5-2640 v2	16GB (2x 8GB)	336GB (20x16GB, 4x4GB)	768GB (24 x 32GB)
Intel Xeon E5-2620 v2	8GB (1x 8GB)	360GB (22x16GB, 2x4GB)	768GB (24 x 32GB)
Intel Xeon E5-2609 v2	4GB (1x 4GB)	372GB (23x16GB, 1x4GB)	768GB (24 x 32GB)

DIMM slot and configuration diagrams

Basic memory slot & population diagram

- Population order; start with "A" first, "B" second, "C" third, etc.

24 DIMM SLOTS (12 per CPU node)					
	slot #	population order	slot #	population order	
Chnl 1	1	A	1	A	Chnl 1
	2	E	2	E	
	3	I	3	I	
Chnl 2	4	B	4	B	Chnl 2
	5	F	5	F	
	6	J	6	J	
	Processor 1		Processor 2		
Chnl 4	7	L	7	L	Chnl 4
	8	H	8	H	
	9	D	9	D	
Chnl 3	10	K	10	K	Chnl 3
	11	G	11	G	
	12	C	12	C	

Memory

Standard memory configuration (1 CPU model)

- 16GB, consisting of two (2) 8GB dual-rank PC3L-10600R-9 RDIMMs (Base Model)

	slot #	population order	slot #	population order	
Chnl 1	1	A; 8GB RDIMM	1	A; empty	Chnl 1
	2	E; empty	2	E; empty	
	3	I; empty	3	I; empty	
Chnl 2	4	B; 8GB RDIMM	4	B; empty	Chnl 2
	5	F; empty	5	F; empty	
	6	J; empty	6	J; empty	
	Processor 1		Processor 2		
Chnl 4	7	l; empty	7	L; empty	Chnl 4
	8	H; empty	8	H; empty	
	9	D; empty	9	D; empty	
Chnl 3	10	K; empty	10	K; empty	Chnl 3
	11	G; empty	11	G; empty	
	12	C; empty	12	C; empty	

Standard memory plus optional memory (1 CPU model)

- 48GB, consisting of two (2) 4GB RDIMMs plus ten (10) 4GB RDIMMs (Base Model)
  - 12x 4GB dual-rank PC3L-10600R-9 RDIMMs

	slot #	population order	slot #	population order	
Chnl 1	1	A; 4GB RDIMM	1	A; empty	Chnl 1
	2	E; 4GB RDIMM	2	E; empty	
	3	I; 4GB RDIMM	3	I; empty	
Chnl 2	4	B; 4GB RDIMM	4	B; empty	Chnl 2
	5	B; 4GB RDIMM	5	F; empty	
	6	J; 4GB RDIMM	6	J; empty	
	Processor 1		Processor 2		
Chnl 4	7	L; 4GB RDIMM	7	L; empty	Chnl 4
	8	H; 4GB RDIMM	8	H; empty	
	9	D; 4GB RDIMM	9	D; empty	
Chnl 3	10	K; 4GB RDIMM	10	K; empty	Chnl 3
	11	G; 4GB RDIMM	11	G; empty	
	12	C; 4GB RDIMM	12	C; empty	

Standard memory replaced with optional memory (1 CPU model)
RDIMM maximum configuration (1 CPU model)

Memory

- 192GB, consisting of twelve (12) 16GB dual-rank PC3L-10600R-9 RDIMMs

	slot #	population order	slot #	population order	
Chnl 1	1	A; 16GB RDIMM	1	A; empty	Chnl 1
	2	E; 16GB RDIMM	2	E; empty	
	3	I; 16GB RDIMM	3	I; empty	
Chnl 2	4	B; 16GB RDIMM	4	B; empty	Chnl 2
	5	F; 16GB RDIMM	5	F; empty	
	6	J; 16GB RDIMM	6	J; empty	
	Processor 1		Processor 2		
Chnl 4	7	L; 16GB RDIMM	7	L; empty	Chnl 4
	8	H; 16GB RDIMM	8	H; empty	
	9	D; 16GB RDIMM	9	D; empty	
Chnl 3	10	K; 16GB RDIMM	10	K; empty	Chnl 3
	11	G; 16GB RDIMM	11	G; empty	
	12	C; 16GB RDIMM	12	C; empty	

UDIMM maximum configuration (1 CPU model)

- 64GB, consisting of eight (8) 8GB dual-rank PC3L-10600E-9 UDIMMs

	slot #	population order	slot #	population order	
Chnl 1	1	A; 8GB UDIMM	1	A; empty	Chnl 1
	2	E; 8GB UDIMM	2	E; empty	
	3	I; empty	3	I; empty	
Chnl 2	4	B; 8GB UDIMM	4	B; empty	Chnl 2
	5	F; 8GB UDIMM	5	F; empty	
	6	J; empty	6	J; empty	
	Processor 1		**Processor 2**		
Chnl 4	7	L; empty	7	L; empty	Chnl 4
	8	H; 8GB UDIMM	8	H; empty	
	9	D; 8GB UDIMM	9	D; empty	
Chnl 3	10	K; empty	10	K; empty	Chnl 3
	11	G; 8GB UDIMM	11	G; empty	
	12	C; 8GB UDIMM	12	C; empty	

Standard memory replaced with optional memory (2 CPU model)
RDIMM maximum configuration (2 CPU model)

- 768GB, consisting of twenty four (24) 32GB quad-rank PC3L-10600LR-9 RDIMMs

	slot #	population order	slot #	population order	
Chnl 1	1	A; 32GB RDIMM	1	A; 32GB RDIMM	Chnl 1
	2	E; 32GB RDIMM	2	E; 32GB RDIMM	

Memory

	3	I; 32GB RDIMM	3	I; 32GB RDIMM	
Chnl 2	4	B; 32GB RDIMM	4	B; 32GB RDIMM	Chnl 2
	5	F; 32GB RDIMM	5	F; 32GB RDIMM	
	6	J; 32GB RDIMM	6	J; 32GB RDIMM	
	Processor 1		**Processor 2**		
Chnl 4	7	L; 32GB RDIMM	7	L; 32GB RDIMM	Chnl 4
	8	H; 32GB RDIMM	8	H; 32GB RDIMM	
	9	D; 32GB RDIMM	9	D; 32GB RDIMM	
Chnl 3	10	K;32GB DIMM	10	K;32GB DIMM	Chnl 3
	11	G;32GB DIMM	11	G;32GB DIMM	
	12	C;32GB DIMM	12	C;32GB DIMM	

UDIMM maximum configuration (2 CPU model)

- 128GB, consisting of sixteen (16) 8GB dual-rank PC3L-10600E-9 UDIMMs

	CPU1		**CPU2**		
	slot #	population order	slot #	population order	
Chnl 1	1	A; 8GB UDIMM	1	A; 8GB UDIMM	Chnl 1
	2	E; 8GB UDIMM	2	E; 8GB UDIMM	
	3	I; empty	3	I; empty	
Chnl 2	4	B; 8GB UDIMM	4	B; 8GB UDIMM	Chnl 2
	5	F; 8GB UDIMM	5	F; 8GB UDIMM	
	6	J; empty	6	J; empty	
	Processor 1		**Processor 2**		
Chnl 4	7	L; empty	7	L; empty	Chnl 4
	8	H; 8GB UDIMM	8	H; 8GB UDIMM	
	9	D; 8GB UDIMM	9	D; 8GB UDIMM	
Chnl 3	10	K; empty	10	K; empty	Chnl 3
	11	G; 8GB UDIMM	11	G; 8GB UDIMM	
	12	C; 8GB UDIMM	12	C; 8GB UDIMM	

NOTE: Capacity references are rounded to the common Gigabyte values.

- 1GB = 1024MB
- 2GB = 2048MB
- 4GB = 4096MB
- 8GB = 8192MB
- 16GB = 16384MB
- 32GB = 32768MB

DDR3 memory options part number decoder

Memory

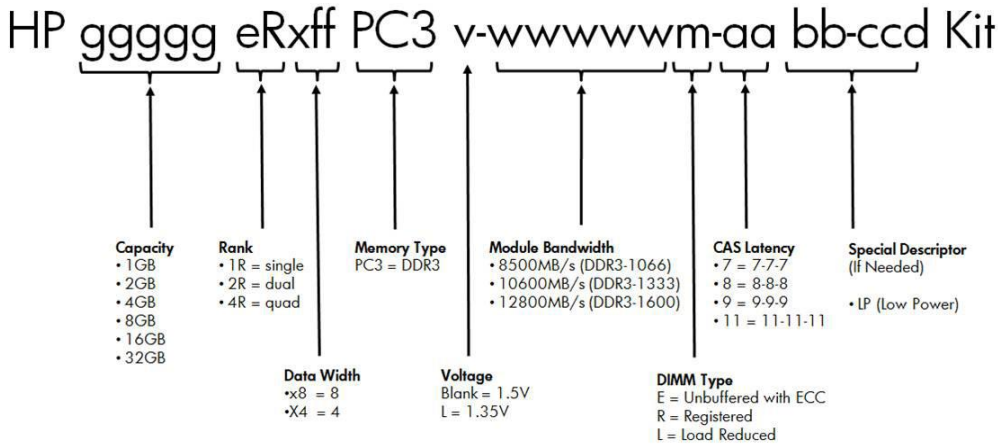

Following are memory options available from HP:

HP Memory

NOTE: HP memory from previous generation servers are not qualified or warranted with this HP ProLiant Server. HP SmartMemory is required to realize the memory performance improvements and enhanced functionality listed in this document for Gen8. For additional information, please see the HP SmartMemory QuickSpecs at: http://h18000.www1.hp.com/products/quickspecs/14225_na/14225_na.html

NOTE: LRDIMM, RDIMM and UDIMMs are all distinct memory technologies and cannot be mixed within a server. The majority of ProLiant Gen8 servers support RDIMM, UDIMM and LRDIMM.

Registered DIMMs (RDIMMs)

NOTE: The following memory is supported by the E5-2600 v2 series Processors.

HP 4GB (1x4GB) Single Rank x4 PC3L-12800R (DDR3-1600) Registered CAS-11 Low Voltage Memory Kit	713981-B21
HP 4GB (1x4GB) Single Rank x4 PC3-14900R (DDR3-1866) Registered CAS-13 Memory Kit	708637-B21
HP 8GB (1x8GB) Dual Rank x4 PC3L-12800R (DDR3-1600) Registered CAS-11 Low Voltage Memory Kit	713983-B21
HP 8GB (1x8GB) Single Rank x4 PC3L-12800R (DDR3-1600) Registered CAS-11 Low Voltage Memory Kit	731765-B21
HP 8GB (1x8GB) Dual Rank x4 PC3-14900R (DDR3-1866) Registered CAS-13 Memory Kit	708639-B21
HP 8GB (1x8GB) Single Rank x4 PC3-14900R (DDR3-1866) Registered CAS-13 Memory Kit	731761-B21
HP 16GB (1x16GB) Dual Rank x4 PC3L-12800R (DDR3-1600) Registered CAS-11 Low Voltage Memory Kit	713985-B21
HP 16GB (1x16GB) Dual Rank x4 PC3-14900R (DDR3-1866) Registered CAS-13 Memory Kit	708641-B21

Registered DIMMs (RDIMMs)

NOTE: The following memory is supported by the E5-2600 series Processors.

HP 4GB (1x4GB) Single Rank x4 PC3L-10600R (DDR3-1333) Registered CAS-9 Low Voltage Memory Kit	647893-B21
HP 4GB (1x4GB) Single Rank x4 PC3-12800R (DDR3-1600) Registered CAS-11 Memory Kit	647895-B21
HP 8GB (1x8GB) Dual Rank x4 PC3L-10600R (DDR3-1333) Registered CAS-9 Low Voltage Memory Kit	647897-B21
HP 8GB (1x8GB) Single Rank x4 PC3-12800R (DDR3-1600) Registered CAS-11	647899-B21

Memory

Memory Kit	
HP 8GB (1x8GB) Dual Rank x4 PC3-12800R (DDR3-1600) Registered CAS-11 Memory Kit	690802-B21
HP 16GB (1x16GB) Dual Rank x4 PC3L-10600R (DDR3-1333) Registered CAS-9 Low Voltage Memory Kit	647901-B21
HP 16GB (1x16GB) Dual Rank x4 PC3-12800R (DDR3-1600) Registered CAS-11 Memory Kit	672631-B21
Unbuffered with ECC DIMMs (UDIMMs) **NOTE:** The following memory is supported by the E5-2600 v2 series Processors.	
HP 2GB (1x2GB) Single Rank x8 PC3L-12800E (DDR3-1600) Unbuffered CAS-11 Low Voltage Memory Kit	713975-B21
HP 2GB (1x2GB) Single Rank x8 PC3-14900E (DDR3-1866) Unbuffered CAS-13 Memory Kit	708631-B21
HP 4GB (1x4GB) Dual Rank x8 PC3L-12800E (DDR3-1600) Unbuffered CAS-11 Low Voltage Memory Kit	713977-B21
HP 4GB (1x4GB) Dual Rank x8 PC3-14900E (DDR3-1866) Unbuffered CAS-13 Memory Kit	708633-B21
HP 8GB (1x8GB) Dual Rank x8 PC3L-12800E (DDR3-1600) Unbuffered CAS-11 Low Voltage Memory Kit	713979-B21
HP 8GB (1x8GB) Dual Rank x8 PC3-14900E (DDR3-1866) Unbuffered CAS-13 Memory Kit	708635-B21
Unbuffered with ECC DIMMs (UDIMMs) **NOTE:** The following memory is supported by the E5-2600 series Processors.	
HP 2GB (1x2GB) Single Rank x8 PC3-12800E (DDR3-1600) Unbuffered CAS-11 Memory Kit	669320-B21
HP 2GB (1x2GB) Single Rank x8 PC3L-10600E (DDR3-1333) Unbuffered CAS-9 Low Voltage Memory Kit	647905-B21
HP 4GB (1x4GB) Dual Rank x8 PC3-12800E (DDR3-1600) Unbuffered CAS-11 Memory Kit	669322-B21
HP 4GB (1x4GB) Dual Rank x8 PC3L-10600E (DDR3-1333) Unbuffered CAS-9 Low Voltage Memory Kit	647907-B21
HP 8GB (1x8GB) Dual Rank x8 PC3-12800E (DDR3-1600) Unbuffered CAS-11 Memory Kit	669324-B21
HP 8GB (1x8GB) Dual Rank x8 PC3L-10600E (DDR3-1333) Unbuffered CAS-9 Low Voltage Memory Kit	647909-B21
Load Reduced DIMMs (LRDIMMs) **NOTE:** The following memory is supported by the E5-2600 v2 series Processors.	
HP 32GB (1x32GB) Quad Rank x4 PC3-14900L (DDR3-1866) Load Reduced CAS-13 Memory Kit	708643-B21
Load Reduced DIMMs (LRDIMMs) **NOTE:** The following memory is supported by the E5-2600 series Processors.	
HP 32GB (1x32GB) Quad Rank x4 PC3L-10600L (DDR3-1333) Load Reduced CAS-9 Low Voltage Memory Kit	647903-B21
NOTE: All DDR3 memory option kits consist of one DIMM per kit. For detailed memory configuration rules and guidelines, please use the Online DDR3 Memory Configuration Tool: http://www.hp.com/go/ddr3memory-configurator. **NOTE:** Depending on the memory configuration and processor model, 1600MHz and 1333MHz memory may operate at a lower speed. Please see the see the "Memory" section later in this document and the Online Memory Configuration Tool for details at www.hp.com/go/ddr3memory-configurator.	

Storage



1 - 12	12 x 3.5" (LFF) Hot-Plug SAS/SATA hard drive bays **NOTE:** Optional 2nd hard drive cage shown in configuration.
A	Optical Drive
B-C	Available half height media bays, for up to two half height optical/tape drives or a single full height tape drive, or both can be populated with a third hard drive cage

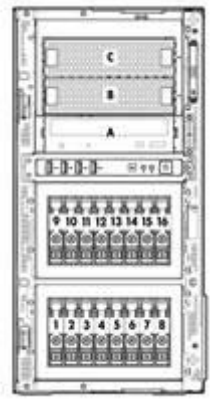

1-16	16 x 2.5" (SFF) Hot-Plug SAS/SATA hard drive bays **NOTE:** Optional 2nd hard drive cage shown in configuration
A	Optical Drive
B-C	Available half height media bays, for up to two half height optical/tape drives or a single, full height tape drives, or both can be populated with a third hard drive cage

Technical Specifications

System Unit	**Tower Dimensions** (H x W x D) (with feet/bezel)	18.19 x 8.58 x 29.13 in (46.2 x 21.8 x 74.0 cm)	
	Rack Dimensions (H x W x D) (with feet/bezel)	8.58 x 19.0 x 28.83 in. (21.8 x 48.26 x 73.22cm)	
	Tower Weight (approximate)	Maximum (all hard drives, power supplies, and processors installed)	114.84 lb (52.09 kg)
		Minimum (one hard drive, power supply, and processor installed)	70.33 lb (31.9 kg)
	Rack Weight (approximate)	Maximum (all hard drives, power supplies, and processors installed)	110.36 lb (50.06 kg)
		Minimum (one hard drive, power supply, and processor installed)	60.91 lb (27.63 kg)
	Input Requirements (per power supply)	Rated Line Voltage	100 to 240 VAC
		Rated Input Current	7.1 Amps (at 120VAC) to 3.5 Amps (at 240 VAC)
		Rated Input Frequency	50 to 60 Hz
		Rated Input Power	852 W
	BTU Rating	Maximum	460W - 1773 BTU / hr (at 120 VAC), 1715 (at 240 VAC) 750W - 2892 BTU / hr (at 120 VAC), 2797 (at 240 VAC) 1200W - 3530 BTU / hr (at 120 VAC), 4600 (at 240 VAC)
	Power Supply Output (per power supply)	Rated Steady-State Power	460(750) W (at 100 VAC), 460(750) W (at 200 VAC)
		Maximum Peak Power	460(750) W (at 100 VAC), 460(750) W (at 200 VAC)
	System Inlet Temperature	Operating	10° to 35°C (50° to 95°F) at sea level with an altitude derating of 1.0°C per every 304.8 m (1.8°F per every 1000 ft) above sea level to a maximum of 3048 m (10,000 ft), no direct sustained sunlight. Maximum rate of change is 10°C/hr (18°F/hr). The upper limit may be limited by the type and number of options installed. System performance may be reduced if operating with a fan fault or above 30°C (86°F).
		Non-operating	-30° to 60°C (-22° to 140°F). Maximum rate of change is 20°C/hr (36°F/hr).
	Relative Humidity (non-condensing)	Operating	10 to 90% relative humidity (Rh), 28°C (82.4°F) maximum wet bulb temperature, non-condensing.

Technical Specifications

		Non-operating	5 to 95% relative humidity (Rh), 38.7°C (101.7°F) maximum wet bulb temperature, non-condensing.
	Altitude	Operating	3048 m (10,000 ft). This value may be limited by the type and number of options installed. Maximum allowable altitude change rate is 457 m/min (1500 ft/min).
		Non-operating	9144 m (30,000 ft). Maximum allowable altitude change rate is 457 m/min (1500 ft/min).
	Acoustic Noise	Listed are the declared A-Weighted sound power levels (LWAd) and declared average bystander position A-Weighted sound pressure levels (LpAm) when the product is operating in a 23°C ambient environment. Noise emissions were measured in accordance with ISO 7779 (ECMA 74) and declared in accordance with ISO 9296 (ECMA 109).	
		Idle	
		L WAd	3.9 Bels (1P Non-Redundant) 4.2 Bels (2P Redundant)
		L pAm	22 dBA (1P Non-Redundant) 24 dBA (2P Redundant)
		Operating	
		L WAd	4.0 Bels (1P Non-Redundant) 4.8 Bels (2P Redundant)
		L pAm	22 dBA (1P Non-Redundant) 30 dBA (2P Redundant)
		NOTE: The Listed sound levels apply to standard shipping configurations. Additional options may result in increased sound levels.	
	Emissions Classification (EMC)	**FCC Rating**	Class B
		Normative Standards	CISPR 22; EN55022; EN55024; FCC CFR 47, Pt 15; ICES-003; CNS13438; GB9254; K22;K24; EN 61000-3-2; EN 61000-3-3; EN 60950-1; IEC 60950-1
		NOTE: Product conformance to cited product specifications is based on sample (type) testing, evaluation, or assessment. This product or family of products is eligible to bear the appropriate compliance logos and statements.	
HP Smart Array P420i Controller	**Dimensions**	Embedded	
	Disk Drive and Enclosure Interface - Transfer rate	6Gb/s SAS (Serial Attached SCSI) 3Gb/s SATA (Serial ATA)	
	SAS Connectors	2 internal 4X connectors	
	Cache Memory Speed	DDR3-1333MHz with 40 or 72-bit wide bus	
	Server Interface	x8 PCIe 3.0 provides 32.0GB/s maximum bandwidth	
	SAS Speed	8 6Gb/s SAS links provide 4.8GB/s maximum bandwidth	
	Cache Memory	Zero Memory RAID has no cache memory 40-bit 512MB ECC protected Flash Backed Write Cache (FBWC) 72-bit 1GB and 2GB ECC protected FBWC	
	Logical Drives Supported	Zero Memory, Up to 2 logical volumes (8 physical drives) Up to 64 logical drives with cache	
	Host Memory Addressing	64-bit, supporting greater than 4GB server memory space	

Technical Specifications

	RAID Support	RAID 6, 60 (Advanced Data Guarding) RAID 5, 50 (Distributed Data Guarding **NOTE:** A minimum of 512 MB cache is required to enable RAID 5, 50, 6, 60. **NOTE:** HP Smart Array Advanced Pack (SAAP 2.0) is no longer required to enable RAID 6 & 60 (Advanced Data Guarding). However, controller must be in firmware version 4.68 (or later). RAID 1+0 (Striping & Mirroring) RAID 0 (Striping), RAID 1 (Mirroring)	
HP Ethernet 1Gb 4-port 331i Adapter	**Network Interface Compatibility**	10Base-T/100Base-TX/1000Base-TX IEEE 802.3 10Base-T IEEE 802.3ab 1000Base-T IEEE 802.3u 100Base-TX	
	Data Transfer Method	PCI Express, two lanes (x2)	
	Controller	BCM5719	
	Network Transfer Rate	10Base-T (Half-Duplex)	10 Mb/s per port, 40 Mb/s Combined
		10Base-T (Full-Duplex)	20 Mb/s per port, 80 Mb/s Combined
		100Base-TX (Half-Duplex)	100 Mb/s per port, 400 Mb/s Combined
		100Base-TX (Full-Duplex)	200 Mb/s per port, 800 Mb/s Combined
		1000Base-TX (Half-Duplex)	1000Mb/s per port, 4000 Mb/s Combined
		1000 Base-TX (Full-Duplex)	2000Mb/s per port, 8000 Mb/s Combined
	Connector	RJ-45	
	Cable Support	10Base-T	Categories 3, 4 or 5 UTP; up to 328 ft (100 m)
		10/100/1000Base-TX	Category 5 or better; up to 328 ft (100 m)
Environment-friendly Products and Approach	**End-of-life Management and Recycling**	Hewlett-Packard offers end-of-life HP product return, trade-in, and recycling programs in many geographic areas. For trade-in information, please go to: http://www.hp.com/go/green. To recycle your product, please go to: http://www.hp.com/go/green or contact your nearest HP sales office. Products returned to HP will be recycled, recovered or disposed of in a responsible manner. The EU WEEE directive (2002/95/EC) requires manufacturers to provide treatment information for each product type for use by treatment facilities. This information (product disassembly instructions) is posted on the Hewlett Packard web site at: http://www.hp.com/go/green. These instructions may be used by recyclers and other WEEE treatment facilities as well as HP OEM customers who integrate and re-sell HP equipment.	

Summary of Changes

Date	Version History	Action	Description of Change
17-Aug-2015	From Version 56 to 57	Changed	Basic memory slot & population diagram was revised.
01-Jun-2015	From Version 55 to 56	Added	New Hard Drives were added to Core Options.
		Removed	Obsolete SKUs were removed from Configuration Information - Factory Integrated Models, Core Options, and Additional Options.
30-Mar-2015	From Version 54 to 55	Added	New Hard Drives were added to Core Options.
09-Feb-2015	From Version 53 to 54	Added	New Hard Drives, DirectFlow UPS, Rack and Tower G4 Models, LCD8500 1U Rackmount Models and Options were added to the Additional Options section.
		Changed	HP Uninterruptible Power Systems, HP Rack Options, and HP Care Pack Services in Additional Options section were revised.
01-Dec-2014	From Version 52 to 53	Added	HP 1.6TB 6G SATA Value Endurance SFF 2.5-in SC Enterprise Value 3yr Wty Solid State Drive and HP 1.6TB 6G SATA Value Endurance LFF 3.5-in SC Converter Enterprise Value 3yr Wty Solid State Drive were added to HP Hard Drives.
		Removed	HP 3 year ISS ProactiveCare Personalized Support was removed from HP Care Pack Services.
01-Nov-2014	From Version 51 to 52	Changed	Service and Support section was revised.
29-Sep-2014	From Version 50 to 51	Added	New Solid State Drives were added. HP Managed Power Distribution Units (maPDU) was added to Additional Options.
		Changed	Service and Support section was revised. HP Hard Drives was revised in Core Options section.
18-Aug-2014	From Version 49 to 50	Added	New Hard Drives were added. HP Remote mPDUs half height version were added.
		Changed	Standard Features, Pre-configured Models, Configuration Information - Factory Integrated Models, Core Options, and Memory sections were revised.
		Removed	HP StoreOnce Backup systems was removed from Additional Options section.
27-Jun-2014	From Version 48 to 49	Changed	Matching WW version with NA since changes were made in North America and Canada only
10-Jun-2014	From Version 47 to 48	Added	Pre-Configured Models – Added Accessories to 736968-xx1 model. Core Options – Added 6G SATA Value Endurance Hot Plug SFF (2.5-inch) Enterprise Boot Solid State Drives and 6G SATA Value Endurance Hot Plug SFF (2.5-inch) Enterprise Value Solid State Drives. Core Options – Added 12G SAS VE SFF (2.5-inch) SC EV Solid State Drives and 12G SAS VE LFF (3.5-inch) SCC EV Solid State Drives. Additional Options – Added Light Endurance (LE) PCIe Workload Accelerators.
		Changed	Additional Options and Memory were revised.
		Removed	Core Options – Removed 690829-B21, 690825-B21, 653082-B21 and 653078-B21 from Hard Drives. Additional Options – T9082AAE and 452151-B21 removed from HP Insight Software.
09-May-2014	From Version 46 to 47	Changed	Memory, Hard Drives, Storage Controllers, and Basic and Remote Monitoring Power Distribution Units were revised.
11-Apr-2014	From Version 45 to 46	Changed	Changes were made in North and America and Canada only.
31-Mar-2014	From Version 43 to 45	Changed	HP Computation and Graphics Accelerators were added HP Hard Drives, HP InfiniBand, HP Insight Software, HP Secure Encryption, HP Storage Controllers, HP Tape Storage Systems, HP Disk Storage Systems, and HP USB and SD Options were revised
21-Feb-2014	From Version 42 to 43	Changed	Changes made in the North America and Canada versions only.
18-Feb-2014	From Version 41 to 42	Changed	Hard Drives, HP InfiniBand, and Storage Controllers were revised

Summary of Changes

			HP Secure Encryption was added to Additional Options
09-Jan-2014	From Version 40 to 41	Added	Added: Support E5-2680 v2 Intel IvyBridge processor
09-Dec-2013	From Version 39 to 40	Changed	HP StoreVirtual VSA was added to Standard Features Processor Upgrade Kit was added to Processors HP 1.2TB 6G SAS 10K rpm SFF SC Dual Port Enterprise 3yr Warranty Hard Drive was added to Hard Drives HP Tape and Disk Storage Systems were added to Additional Options HP InfiniBand 4X QDR ConnectX-2 PCIe G2 Dual Port HCA was removed from HP InfiniBand First Generation Accelerators was removed from HP I/O Accelerator Options NVIDIA Quadro 4000 2GB and 6000 6GB PCI-E Adapters was removed from Graphics Options HP USB and SD Options were revised
01-Nov-2013	From Version 38 to 39	Changed	Changed a note in the Models section.
25-Oct-2013	From Version 37 to 38	Changed	Change made in the Models section.
11-Oct-2013	From Version 36 to 37	Added	HP 300 GB and 600 GB SATA Value Endurance SFF and LFF Enterprise Boot Solid State Drives were added to Hard Drives Mainstream Endurance (ME) PCIe Workload Accelerators were added to HP PCIe Workload Accelerator Options HP Remote Monitoring Power Distribution Units were added to Additional Options
03-Oct-2013	From Version 35 to 36	Changed	Correction made in the Models section.
24-Sep-2013	From Version 34 to 35	Changed	Changes were made in Configuration Information and Core Options Sections
12-Sep-2013	From Version 33 to 34	Changed	Changes made in the North America and Canada versions only.
10-Sep-2013	From Version 32 to 33	Added	E5-2600 v2 series Processors, Memory, Controllers, and NICs were added Canonical Ubuntu was added to Operating Systems and Virtualization Software Support for ProLiant Servers Smart Array P430 and P431 Controllers were added to Storage Controllers HP StoreFabric SN1100E and CN1100R Fibre Channel Host Bus Adapters were added to HP Storage Options
15-Jul-2013	From Version 31 to 32	Changed	HP Disk Backup was revised in Additional Options.
14-Jun-2013	From Version 30 to 31	Changed	Changes made in the North America and Canada versions only.
31-May-2013	From Version 29 to 30	Changed	Changes made in the North America and Canada versions only.
23-May-2013	From Version 28 to 29	Changed	Corrected a broken link in the Storage Controllers section of Additional Options.
15-May-2013	From Version 27 to 28	Added	Additional Options: Added HP PCIe Workload Accelerator Options and HP Basic Power Distribution Units section.
		Changed	Standard Features: Updated Maximum Internal Storage section. Core Options: Updated HP Hard Drives section. Additional Options: Updated HP Graphics Options, HP Rack Options, HP USB and SD Options and HP Care Pack Services sections.
12-Apr-2013	From Version 26 to 27	Added	Added to a Note in the Hard Drives section of Options.
25-Mar-2013	From Version 25 to 26	Removed	Additional Options: Removed 641027-B21, 600279-B21 and 600282-B21 from the Accelerator Options section.
26-Feb-2013	From Version 24 to 25	Changed / Added	Changes made in the following sections: Optional Features - HP Insight Management, Added Storage Software, Configuration Information - Step 3 Core Options - Hard Drives, HP Insight Software, HP I/O Accelerator Options, HP Tape Backup, HP Storage Options, HP Care Pack

Summary of Changes

			Services
25-Jan-2013	From Version 23 to 24	Changed	A correction was made to update a description in the Hard Drives section of Core Options.
04-Jan-2013	From Version 22 to 23	Added	Added a NOTE to the Hard Drives Kits section of Core Options.
10-Dec-2012	From Version 21 to 22	Added	HP Power Distribution Units and HP Intelligent Power Distribution Units (iPDU) sections
		Changed	Updated What's New Updated HP Insight Management Software throughout the document. Updated Hard Drives Revised HP Tape Backup and HP Disk Backup Revised HP Rack Options, specifically the Keyboards and Monitors section, USB Keyboard and Mouse section, HP Server Console Switch G2 with Virtual Media & CAC and HP IP Console Switch G2 with Virtual Media & CAC In Storage/HP SCSI Tape Drives, updated the name of the controller
		Removed	Removed HP Performance Packs from Step 3 of Configuration Information. Removed HP Backup & Recovery Software
26-Oct-2012	From Version 20 to 21	Changed	Changes were made in Standard Features and Models sections.
24-Sep-2012	From Version 19 to 20	Changed	Changes were made in Standard Features, Optional Features and Technical Specifications sections.
22-Aug-2012	From Version 18 to 19	Changed	Changes made in Standard Features, Core Options, Memory and Storage sections.
15-Aug-2012	From Version 17 to 18	Changed	Changes made in Standard Features, Core Options, Memory and Storage sections.
14-Aug-2012	From Version 16 to 17	Changed	Changes made to the North America and Canada versions only.
13-Aug-2012	From Version 14 to 16	Changed	Changes made throughout the entire QuickSpecs.
10-Jul-2012	From Version 13 to 14	Changed	Change made within the Models section only.
15-Jun-2012	From Version 11 to 12	Added	Added Notes to Standard Features, Configuration Information and Core Options sections.
05-Jun-2012	From Version 10 to 11	Changed	Changes made within the Models, Memory and Storage sections.
04-Jun-2012	From Version 9 to 10	Changed	Changes made throughout the entire QuickSpecs.
18-May-2012	From Version 8 to 9	Changed	Changes made to the Processors section of Standard Features.
14-May-2012	From Version 7 to 8	Changed	HP Insight Software was revised.
06-Apr-2012	From Version 6 to 7	Changed	Changes made in the Additional Options and Memory sections only.
30-Mar-2012	From Version 5 to 6	Changed	Changes made in the Models, Additional Options and Memory sections.
26-Mar-2012	From Version 4 to 5	Changed	Changes made in the Additional Options section.
16-Mar-2012	From Version 3 to 4	Changed	Changes made in the Core Options section.
13-Mar-2012	From Version 2 to 3	Changed	Memory section was updated.
07-Mar-2012	From Version 1 to 2	Changed	Changes made in the Additional Options and Storage sections.

© Copyright 2015 Hewlett-Packard Development Company, L.P.

The information contained herein is subject to change without notice.

Microsoft and Windows NT are US registered trademarks of Microsoft Corporation. Intel is a US registered trademark of Intel Corporation.

The only warranties for HP products and services are set forth in the express warranty statements accompanying such products and services. Nothing herein should be construed as constituting an additional warranty. HP shall not be liable for technical or editorial errors or omissions contained herein.

Summary of Changes

For hard drives, 1GB = 1 billion bytes. Actual formatted capacity is less.