HP ProLiant s6500 Chassis Setup and Installation Guide

Abstract

This guide describes the setup, configuration, and usage of the HP ProLiant s6500 Chassis.



Part Number: 653239-005
June 2014
Edition: 5

© Copyright 2011, 2014 Hewlett-Packard Development Company, L.P.

The information contained herein is subject to change without notice. The only warranties for HP products and services are set forth in the express warranty statements accompanying such products and services. Nothing herein should be construed as constituting an additional warranty. HP shall not be liable for technical or editorial errors or omissions contained herein.

Microsoft® is a U.S. registered trademark of Microsoft Corporation.

Contents

Planning the installation 5
Features 5
Grounding requirements 5
Space and airflow requirements 5
Configuration rules 6
Identifying components and LEDs 7
Front panel components 7
Rear panel components 7
Rear panel LEDs and buttons 8
Redundant system fan configuration 9
Installing components 10
System fans 10
Removing the system fan 10
Installing the system fan 11
Power supplies 11
Removing the PSU backplane 12
Installing the PSU backplane 13
Removing the power supply 14
Installing the power supply 14
Rack options 16
Installing the 4U rack kit 16
Installing the 4U POD rail kit 18
Installing the 4U third-party rail kit 21
Installing the chassis handles kit 23
Installing the half-width node blank 24
Installing the full-width node blank 25
Removing the center wall 25
Cabling 27
Hardware installation 27
Scalable system hardware 27
Rack types and configurations 27
Optional installation services 28
Optimum environment 29
Installation guidelines 30
Cabling guidelines 31
Installation overview for full-rack solutions 31
Power cabling 32
Power requirements and considerations 32
PDU support 33
Extension bar support 33
Power cabling configurations 33
Network cabling 41
Network adapter and switch support 41
Network cabling configurations 41

Using the HP Advanced Power Manager 44
HP APM overview 44
Best practices 45
Three-phase balancing 45
3+1 redundant mode and 4 single-ended nonredundant mode 46
Support and other resources 47
Before you contact HP 47
HP contact information 47
Acronyms and abbreviations 48
Documentation feedback 50
Index 51

Planning the installation

Features

The HP ProLiant SL chassis can accommodate up to eight half-width servers, giving you the ability to mix and match server nodes, and also allows for single node serviceability.

The ProLiant SL Chassis includes the following features:

- Right-sized HP ProLiant power supplies from 750 W at 94% efficiency to 1200 W at 94% efficiency
- Supports up to four full-width servers
- Supports hot plug redundant or non redundant fans
- Ability to mix and match half-width server trays in one chassis
- Single node serviceability enables you to serve one tray while the other trays continue to operate
- Uses shared power and cooling for better efficiency
- Three-phase power balancing
- Hot-plug serviceable fans and power supplies

NOTE: Half-width and full-width server trays cannot be mixed within a chassis.

Grounding requirements

- The building installation must provide a means of connection to protective earth.
- The equipment must be connected to that means of connection.
- A service person must check whether the socket-outlet from which the equipment is to be powered provides a connection to the building protective earth. If the outlet does not provide a connection, the service person must arrange for the installation of a protective earthing conductor from the separate protective earthing terminal to the protective earth wire in the building.

Space and airflow requirements

To allow for servicing and adequate airflow, observe the following space and airflow requirements when deciding where to install a rack:

- Leave a minimum clearance of 63.5 cm (25 in) in front of the rack.
- Leave a minimum clearance of 76.2 cm (30 in) behind the rack.
- Leave a minimum clearance of 121.9 cm (48 in) from the back of the rack to the back of another rack or row of racks.

HP servers draw in cool air through the front door and expel warm air through the rear door. Therefore, the front and rear rack doors must be adequately ventilated to allow ambient room air to enter the cabinet, and the rear door must be adequately ventilated to allow the warm air to escape from the cabinet.

CAUTION: To prevent improper cooling and damage to the equipment, do not block the ventilation openings.

When vertical space in the rack is not filled by a server or rack component, the gaps between the components cause changes in airflow through the rack and across the servers. Cover all gaps with blanking panels to maintain proper airflow.

CAUTION: Always use blanking panels to fill empty vertical spaces in the rack. This arrangement ensures proper airflow. Using a rack without blanking panels results in improper cooling that can lead to thermal damage.

The 9000 and 10000 Series Racks provide proper server cooling from flow-through perforations in the front and rear doors that provide 64 percent open area for ventilation.

CAUTION: When using a Compaq branded 7000 series rack, install the high airflow rack door insert (PN 327281-B21 for 42U rack, PN 157847-B21 for 22U rack) to provide proper front-to-back airflow and cooling.

CAUTION: If a third-party rack is used, observe the following additional requirements to ensure adequate airflow and to prevent damage to the equipment:

- Front and rear doors—If the 42U rack includes closing front and rear doors, you must allow 5,350 sq cm (830 sq in) of holes evenly distributed from top to bottom to permit adequate airflow (equivalent to the required 64 percent open area for ventilation).
- Side—The clearance between the installed rack component and the side panels of the rack must be a minimum of 7 cm (2.75 in).

Configuration rules

- Half-width and full-width trays cannot be mixed.
- No 2U trays can reside in the middle two bays.
- Each half of the chassis can support any of the half-chassis configurations.
- All SL-series servers can be mixed.
- Empty bays must be populated with a node blank to meet thermal requirements.
- Fans must be installed in all fan bays to meet thermal requirements.
- Redundant and nonredundant fan configurations cannot be mixed.

Identifying components and LEDs

Front panel components

The following figure identifies the slot numbering for the front panel of the s6500 chassis.

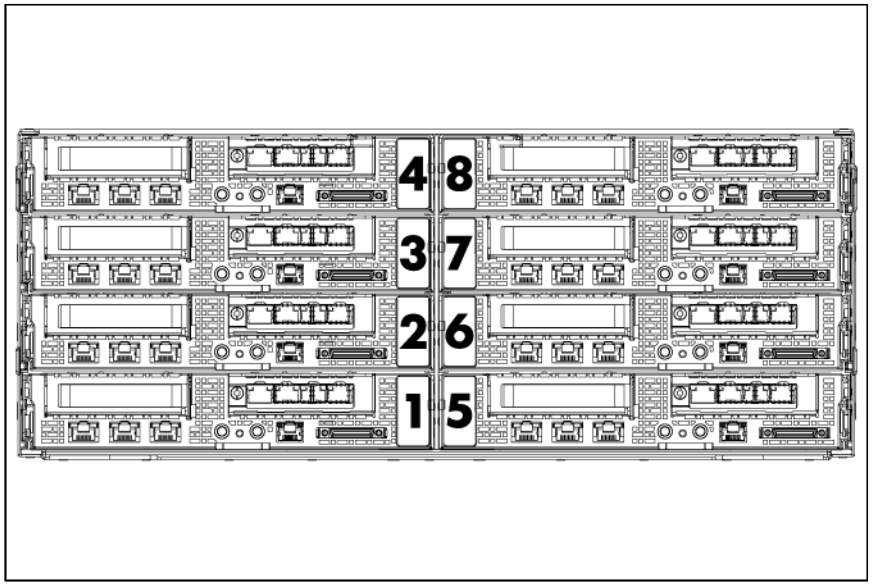

Rear panel components

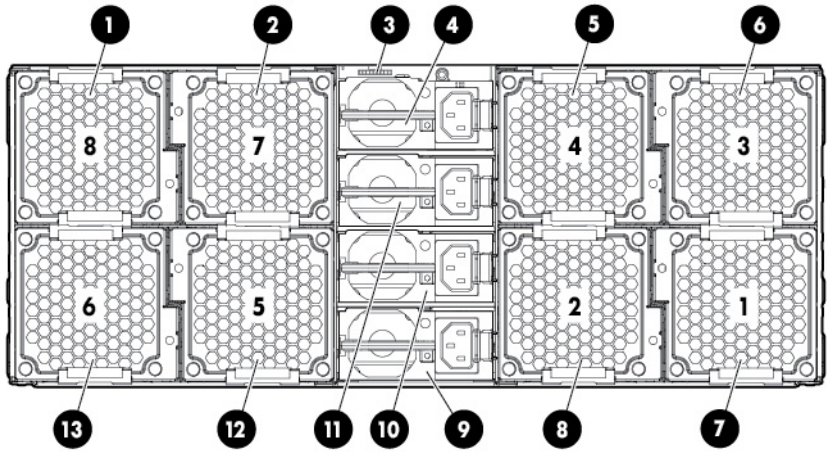

Item	Description
1	Fan 8
2	Fan 7
3	HP APM interface

4	Power supply 4
5	Fan 4
6	Fan 3
7	Fan 1
8	Fan 2
9	Power supply 1
10	Power supply 2
11	Power supply 3
12	Fan 5
13	Fan 6

Rear panel LEDs and buttons

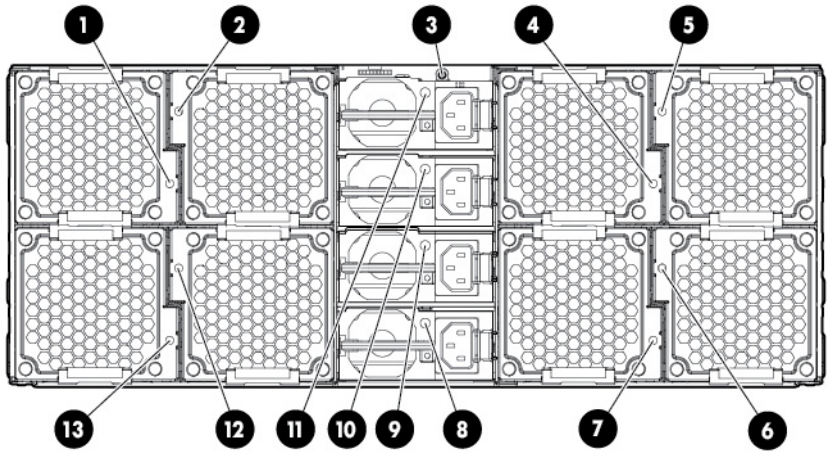

Item	Description	Status
1	Fan 8/16 power LED	Off—Normal Amber—Fan has failed.
2	Fan 7/15 power LED	Off—Normal Amber—Fan has failed.
3	UID LED button	Blue—Activated Flashing blue—System is being remotely managed. Off—Deactivated
4	Fan 4/12 power LED	Off—Normal Amber—Fan has failed.
5	Fan 3/11 power LED	Off—Normal Amber—Fan has failed.
6	Fan 1/9 power LED	Off—Normal Amber—Fan has failed.
7	Fan 2/10 power LED	Off—Normal Amber—Fan has failed.
8	Power supply 1 power LED	Green—Normal Off—No AC power
9	Power supply 2 power LED	Green—Normal

Item	Description	Status
		Off—No AC power
10	Power supply 3 power LED	Green—Normal Off—No AC power
11	Power supply 4 power LED	Green—Normal Off—No AC power
12	Fan 5/13 power LED	Off—Normal Amber—Fan has failed.
13	Fan 6/14 power LED	Off—Normal Amber—Fan has failed.

Redundant system fan configuration

The server has 16 system fans located on the rear panel of the chassis.

The following figure identifies the system fans by device number.

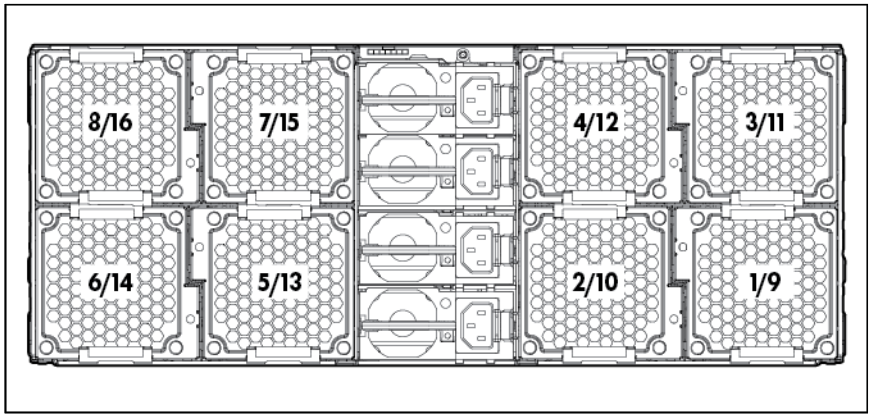

Installing components

System fans

The server has eight system fans located on the rear panel of the chassis.

The following figure identifies the system fans by device number.

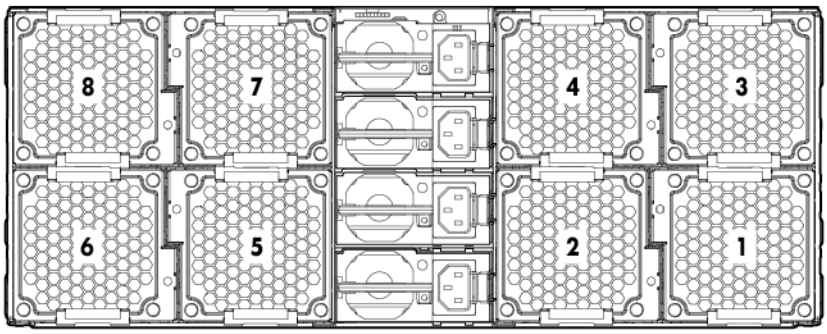

△ **CAUTION:** To prevent damage to the server, do not install a combination of redundant and non-redundant fans.

Removing the system fan

1. Squeeze the two release tabs on the system fan together to release it from the chassis.
2. Lift the system fan away from the chassis.

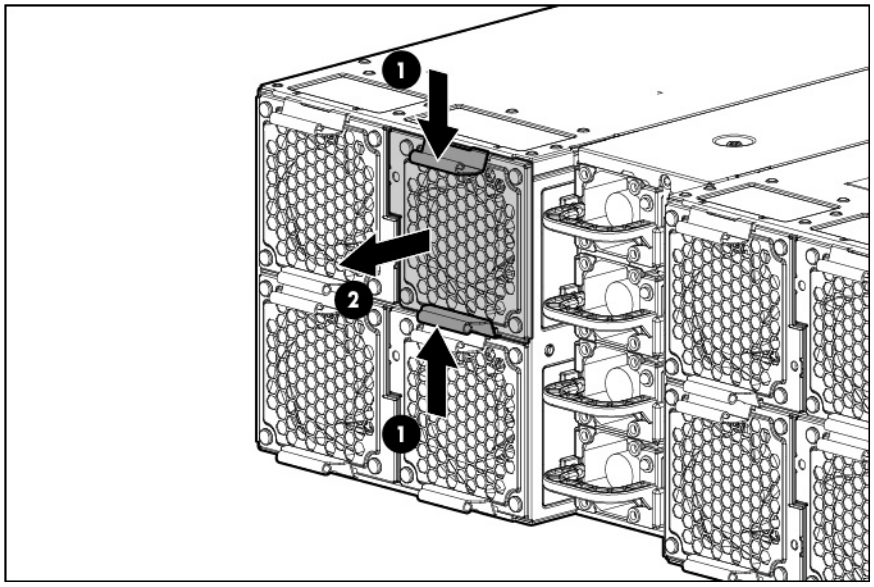

Installing the system fan

Insert the system fan into the chassis.

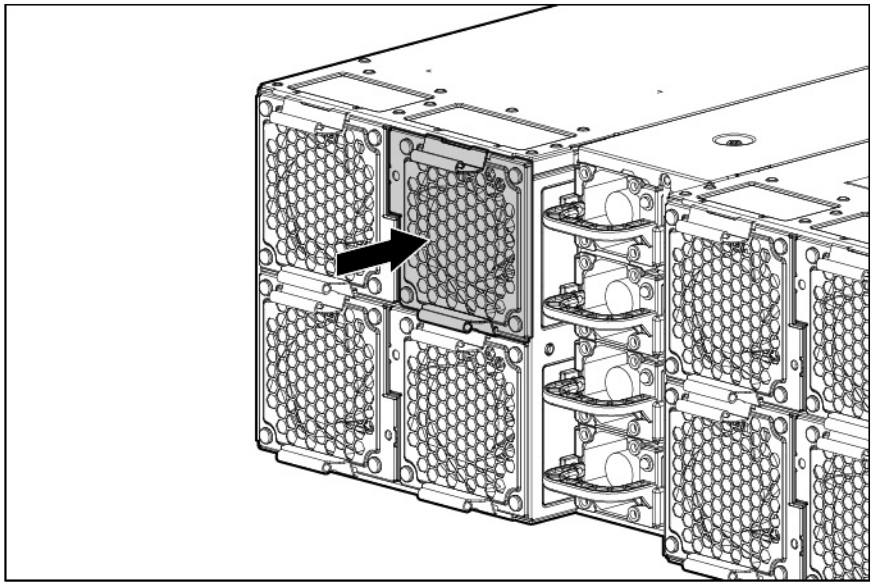

Power supplies

Standard 750-W or 1200-W power supplies with PFC functionality are located on the rear panel of the server.

NOTE: Power supplies with different wattage cannot be mixed in the same chassis.

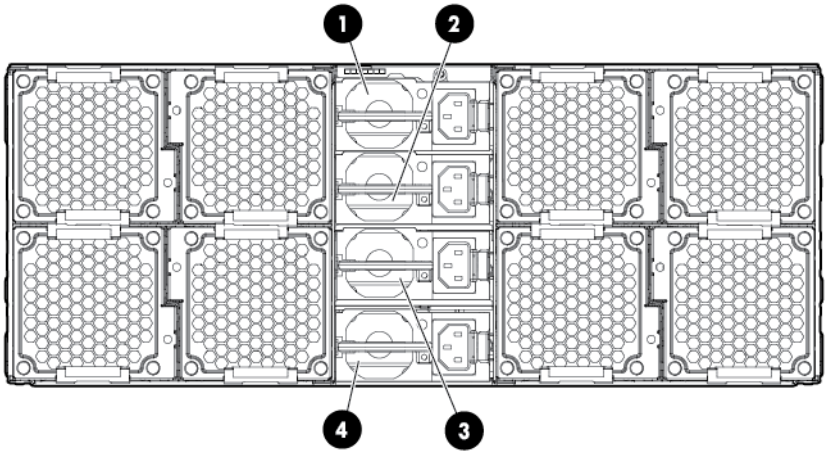

Item	Description
1	Power supply 4
2	Power supply 3
3	Power supply 2
4	Power supply 1

Removing the PSU backplane

1. To reduce weight of the chassis, remove the power supplies ("Removing the power supply" on page 14) and server nodes. For information about removing the nodes, see the server user guide.
2. Pull the chassis out of the rack far enough to install the chassis handles.

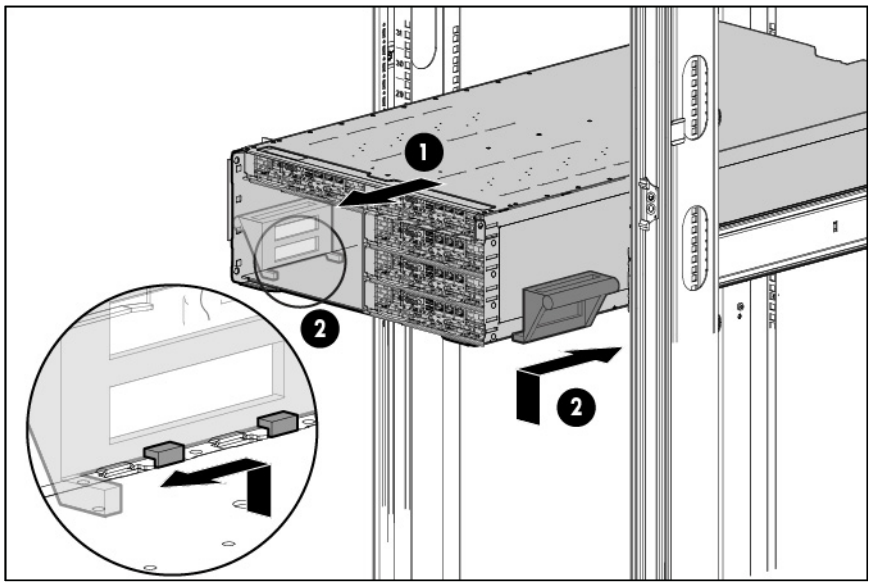

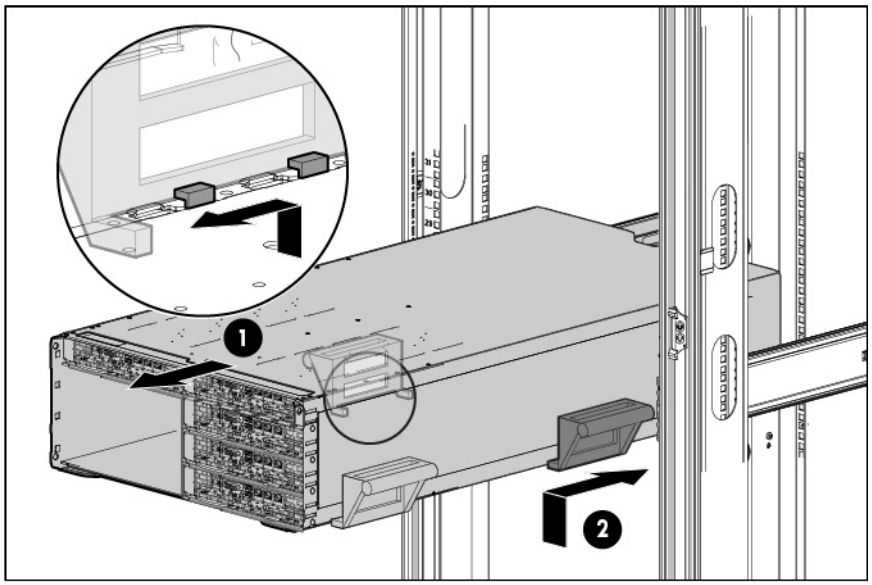

3. Use the chassis handles to remove the chassis from the rack.
4. Place the chassis on flat, level surface.
5. Remove the top cover from the power supply cage.
6. Disconnect all cables from the PSU backplane.

7. Remove the PSU backplane.

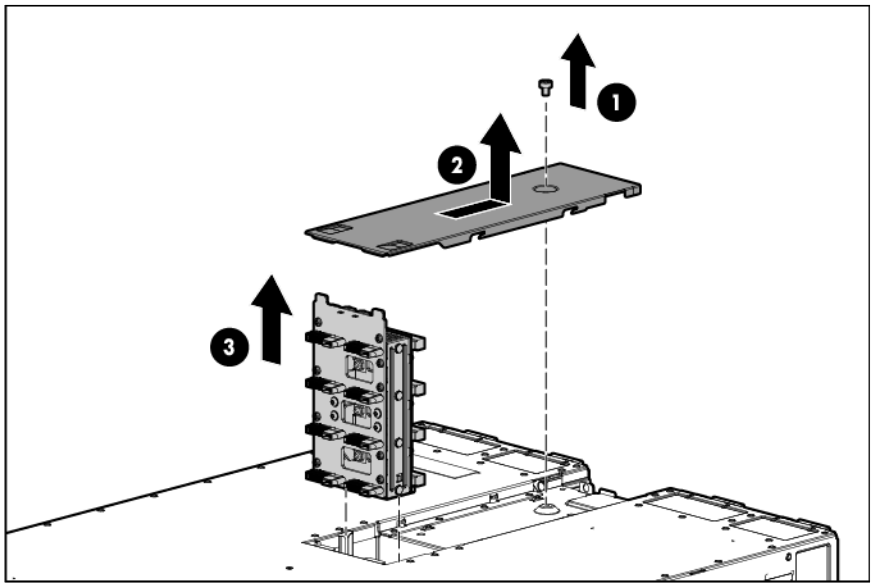

Installing the PSU backplane

1. To reduce weight of the chassis, remove the power supplies ("Removing the power supply" on page 14) and server nodes. For information about removing the nodes, see the server user guide.
2. Pull the chassis out of the rack far enough to install the chassis handles.
3. Use the chassis handles to remove the chassis from the rack.
4. Place the chassis on flat, level surface.
5. Remove the top cover from the power supply cage.
6. Unplug all cables from the chassis.
7. Install the PSU backplane.
8. Connect all cables to the PSU backplane.
9. Install the top cover to the power supply cage.

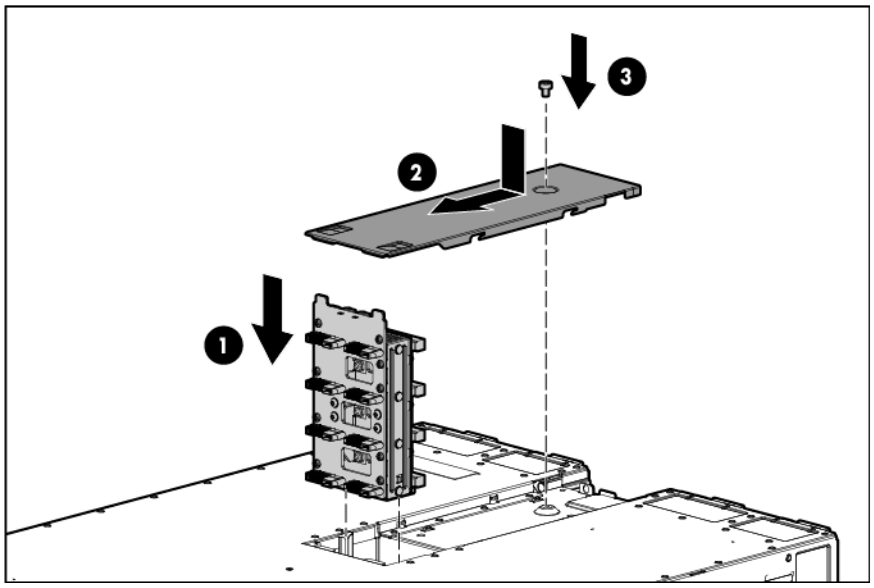

10. Install the chassis in the rack.
11. Install the nodes and power supplies.

Removing the power supply

1. Press the port colored button on the power supply latch.
2. Slide the power supply out of the power supply bay.

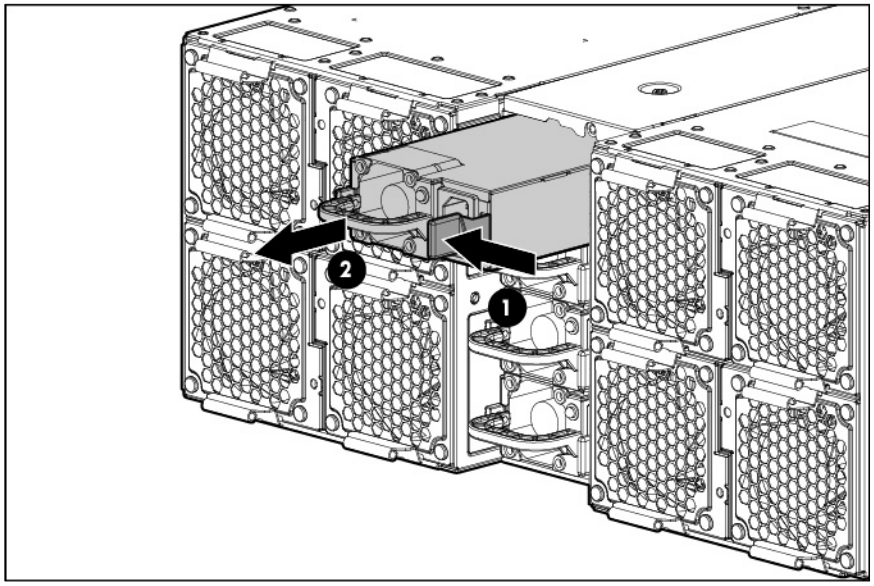

Installing the power supply

△ **CAUTION:** Always install either a hot-plug power supply or a power supply blank into each bay to maintain proper airflow and cooling in the server. Improper airflow can lead to thermal damage.

△ **CAUTION:** Do not mix HP 1200W, HP 1200W High Efficiency, HP 750W, or HP 750W High Efficiency power supplies in one enclosure. Install only one type of power supply in a single enclosure.

1. Align the power supply edge card connector with the open slot of power supply cage.

2. Slide the power supply into the power supply bay until it clicks into place.

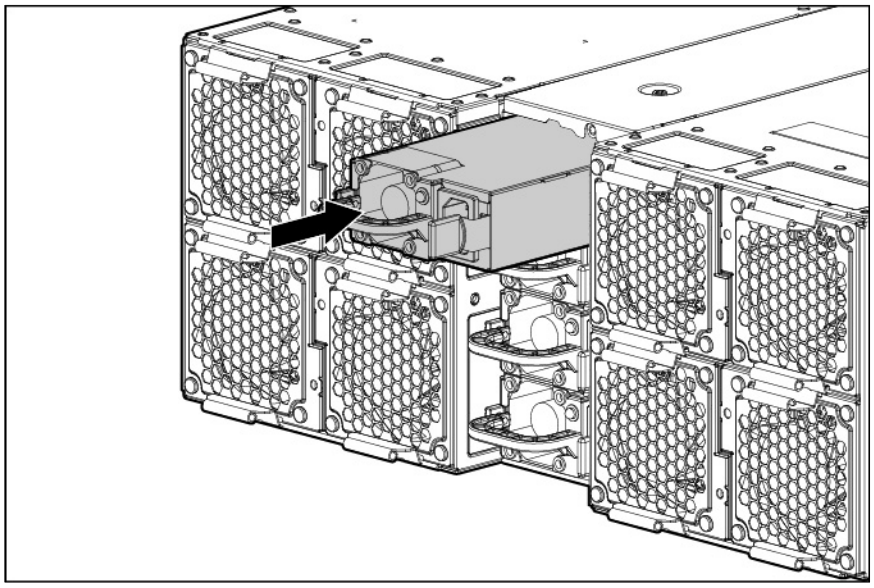

Rack options

Installing the 4U rack kit

WARNING: The server is very heavy. To reduce the risk of personal injury or damage to the equipment:

- Reduce the weight of the server by removing the hard drives and power supplies before installing the server into the rack.
- At least two people are required to lift the server during installation or removal.

CAUTION: Always plan the rack installation so that the heaviest item is on the bottom of the rack. Install the heaviest item first, and continue to populate the rack from the bottom to the top.

Before installing the rail kit, release the handle and open the door.

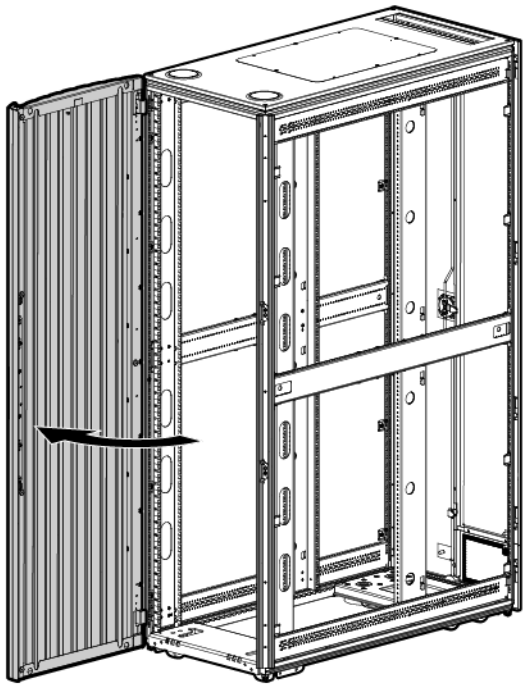

1. Insert the rail in the rack column.
2. Insert the two middle standoffs on the rail into the holes on the front rack column.
3. To secure the front of the rail to the front rack column, fasten the shoulder screws.

4. To secure the rear of the rail to the rear rack column, fasten the two pan head screws with lock washers.

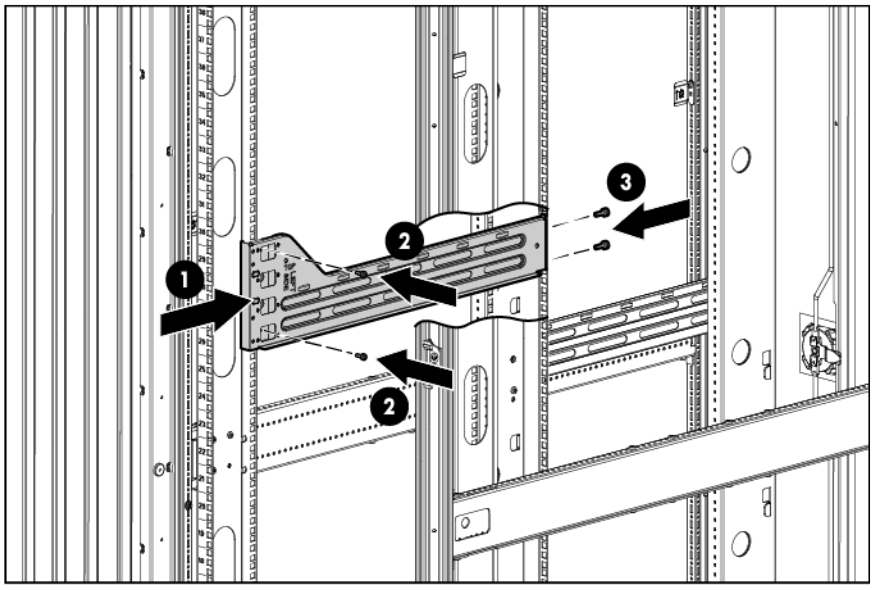

To install the 4U chassis:

1. Insert the chassis on the rails.
2. To secure the chassis to both rails, fasten the screws.

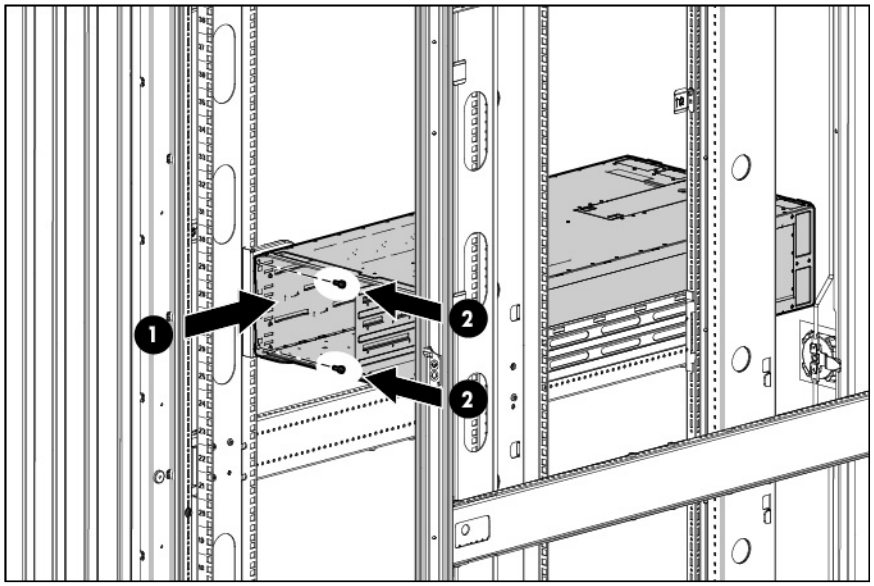

To install the shipping bracket:

1. Install two cage nuts on the back of both rear rack columns (four cage nuts total) in the desired U space.
2. Install the shipping bracket to the rack column.

3. To secure the shipping bracket to the rack column, fasten four pan head screws with the orange tags and lock washers.

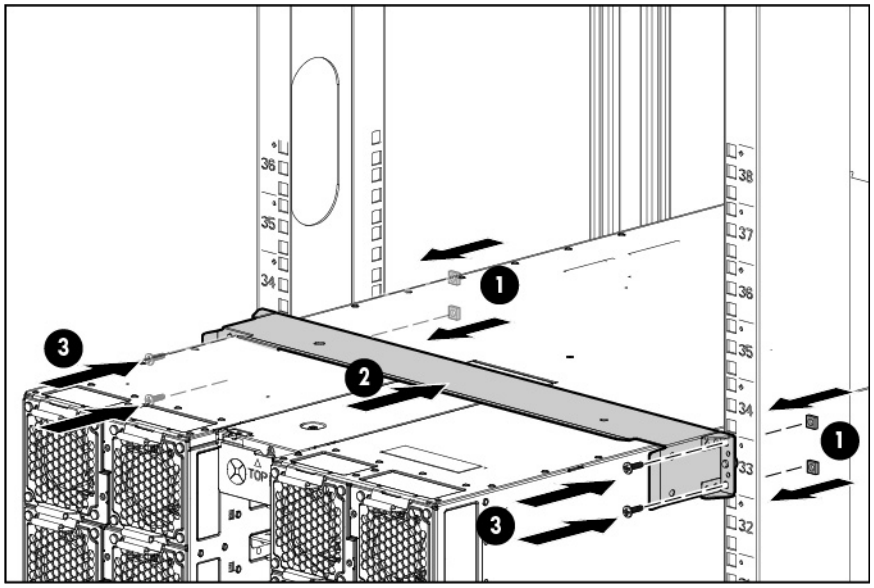

Installing the 4U POD rail kit

Before installing the rail kit, release the handle and open the door.

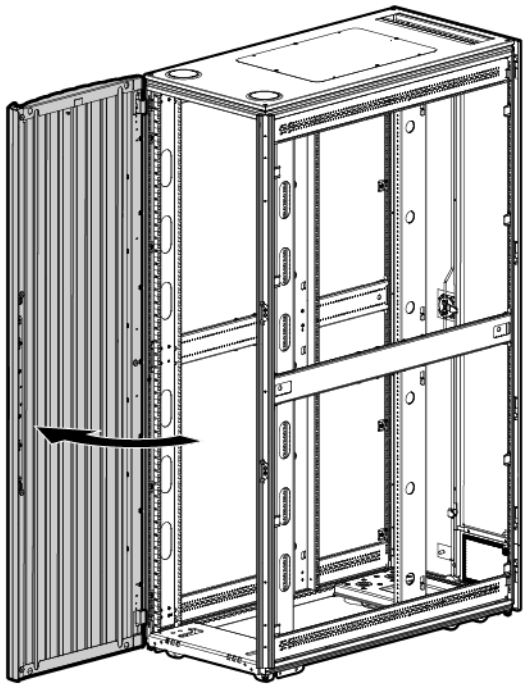

1. Insert the POD rail in the rack column.

2. Fasten the screws to secure it.

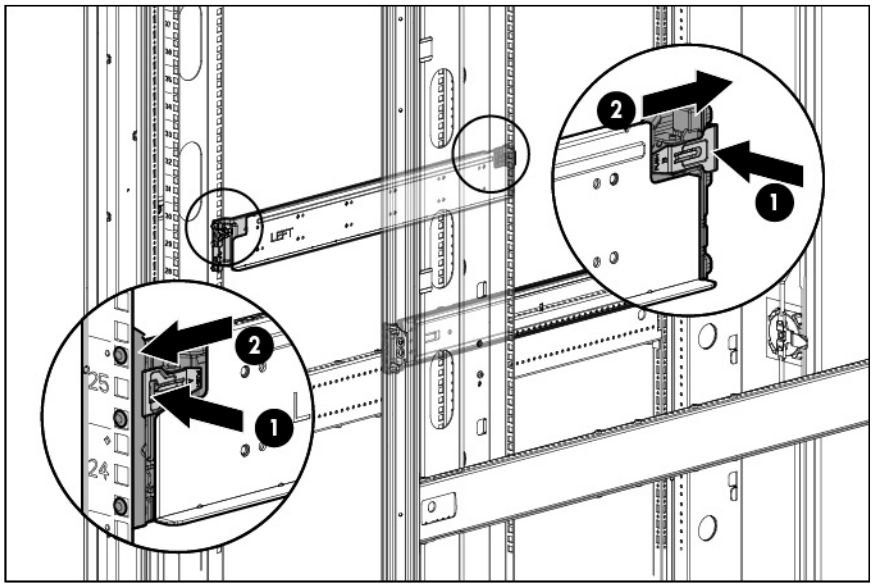

To install the POD front mounting bracket on the rack column:

1. Install one cage nut on the back of both rack columns (two cage nuts total) in the desired U space.
2. Install the POD front mounting brackets to the rack columns.
3. Fasten the screws to secure the POD front mounting brackets to the rack columns.

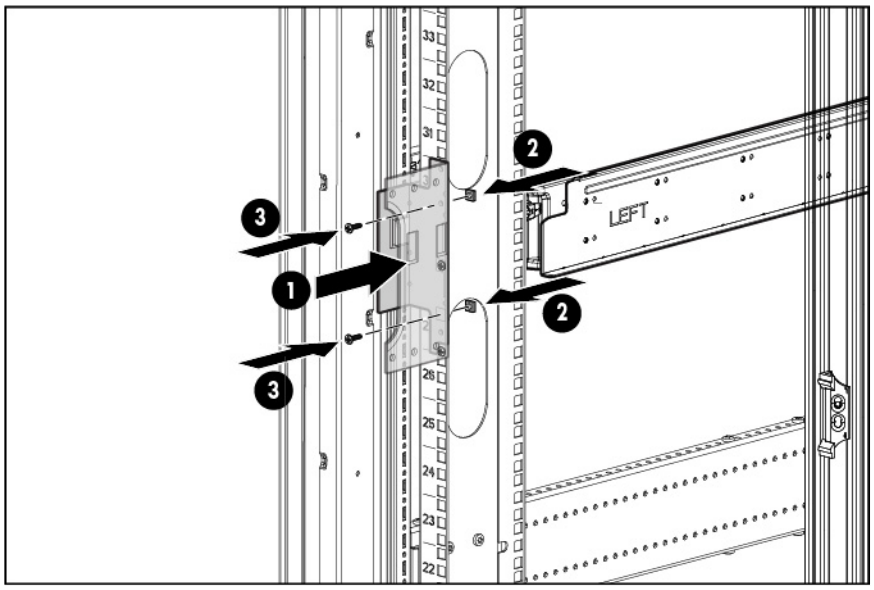

To install the 4U chassis:

1. Insert the 4U chassis on the POD rails.

2. Fasten the screws to secure the chassis to the front brackets.

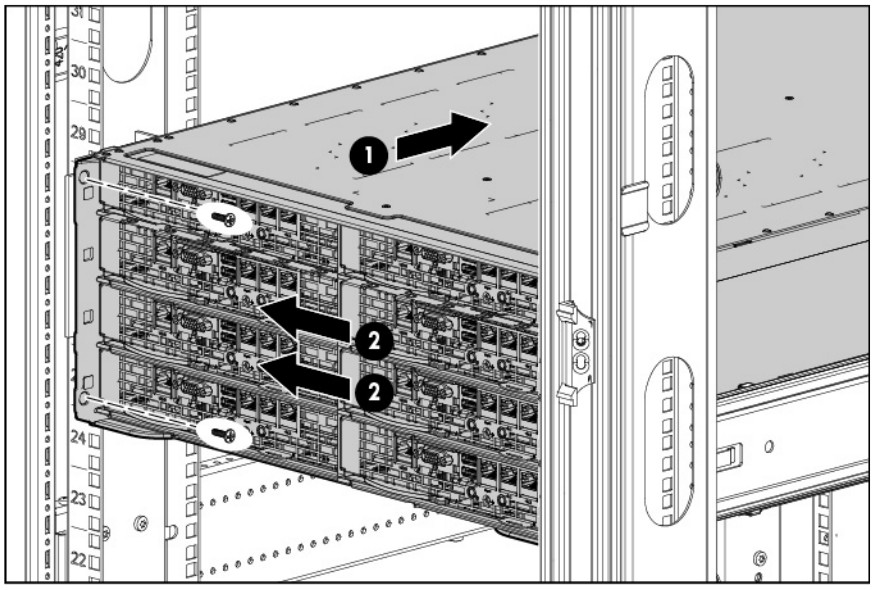

To install the shipping bracket:

1. Install two cage nuts on the back of both rear rack columns (four cage nuts total) in the desired U space.
2. Install the shipping bracket to the rack column.
3. To secure the shipping bracket to the rack column, fasten four pan head screws with the orange tags and lock washers.

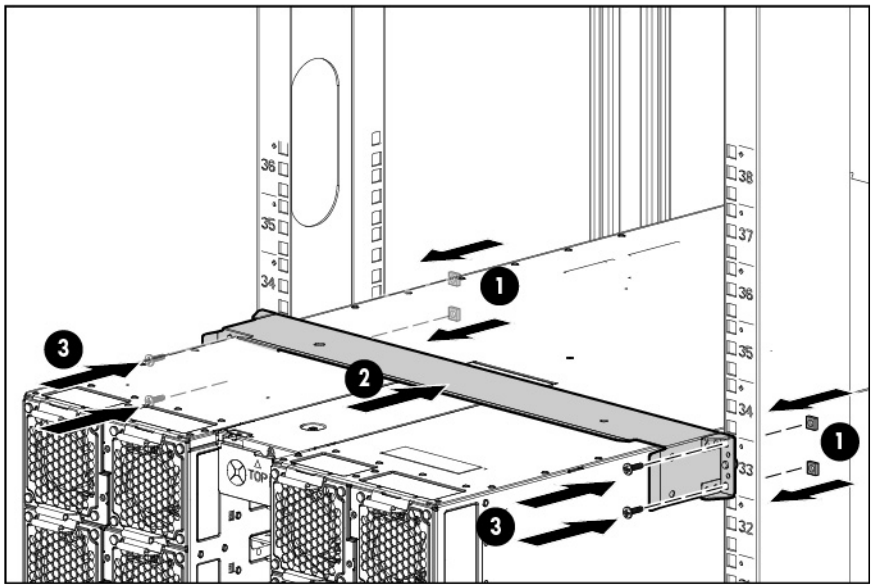

Installing the 4U third-party rail kit

Before installing the rail kit, release the handle and open the door.

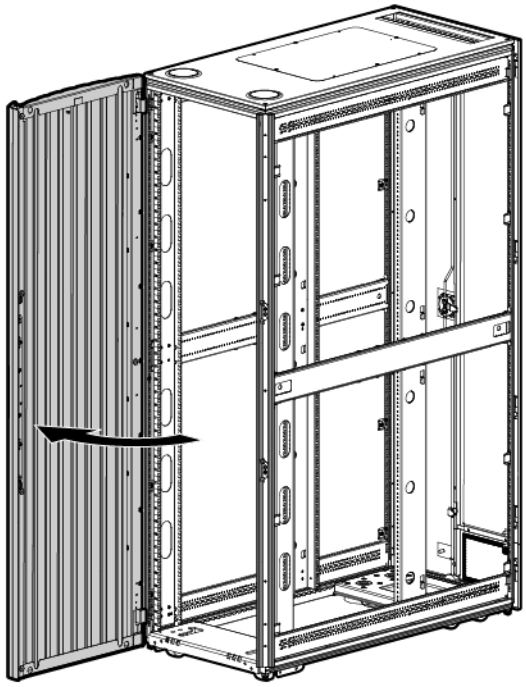

To install the rail:

1. To make three standoffs on the rail to lock in the rack column, press the latches and slide the rail.
2. To secure the rail to the rack column, release the latches.

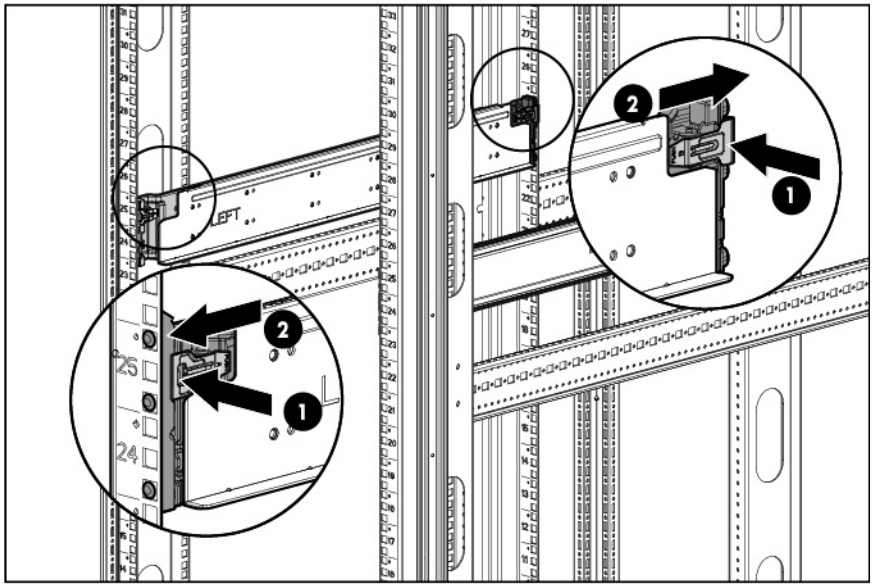

To install the bracket:

1. Align the bracket with the rack column and rail, and then install one cage nut.

2. To secure the bracket to the rack column, fasten the screws.

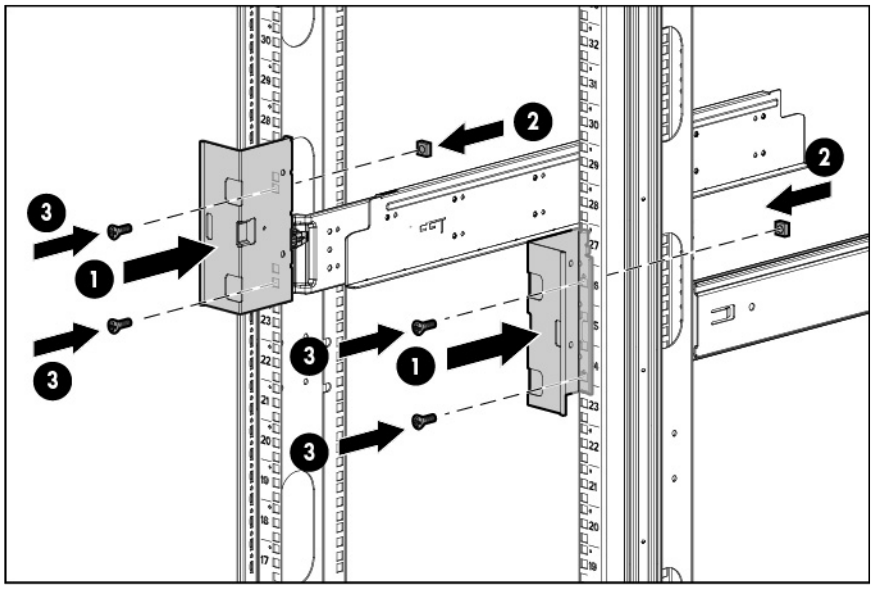

To install the 4U chassis:

1. Insert the chassis into the rails.
2. Align the two holes on the chassis with the holes on the bracket, and then to secure the chassis to the bracket, fasten the screws.

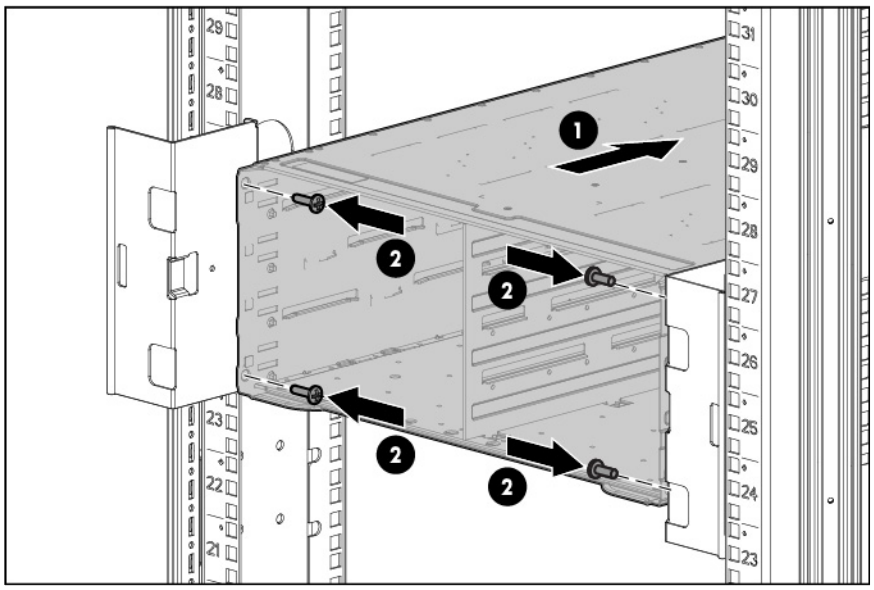

To install the shipping bracket:

1. Install two cage nuts on the back of both rear rack columns (four cage nuts total) in the desired U space.
2. Install the shipping bracket to the rack column.

3. To secure the shipping bracket to the rack column, fasten four pan head screws with the orange tags and lock washers.

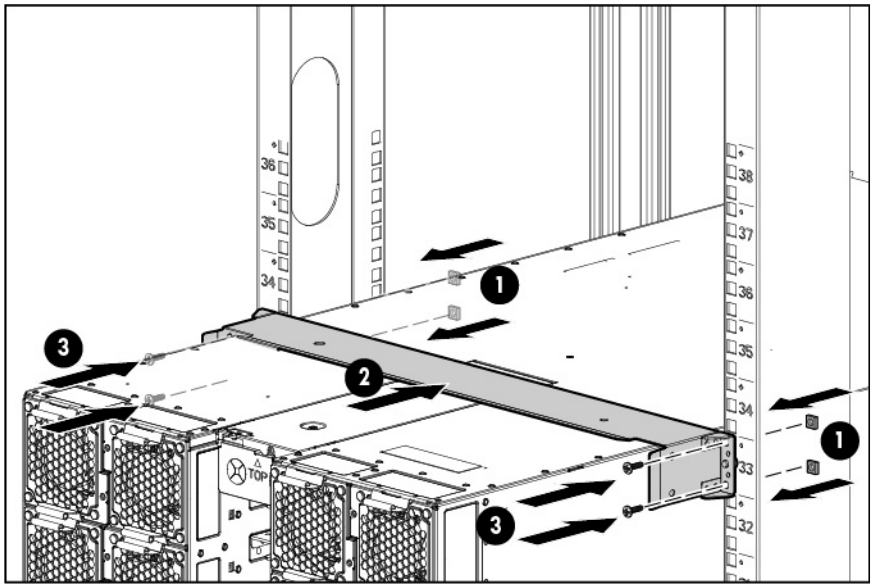

Installing the chassis handles kit

The chassis handles are used to help move the chassis up to the rails. Remove the handles when pushing the chassis into the rails.

To install the s6500 chassis handles, insert the handles into the slot openings at the bottom of the chassis, and then slide to latch the handles on the chassis.

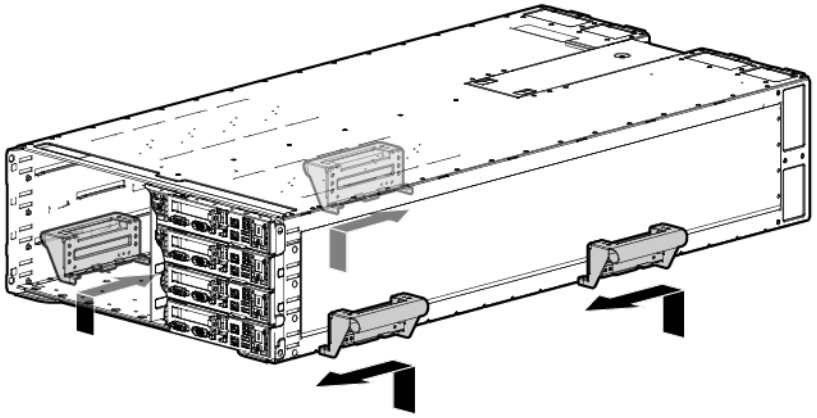

To remove the chassis handles, press the latches on the handles to release the handles, and then slide them out of the chassis.

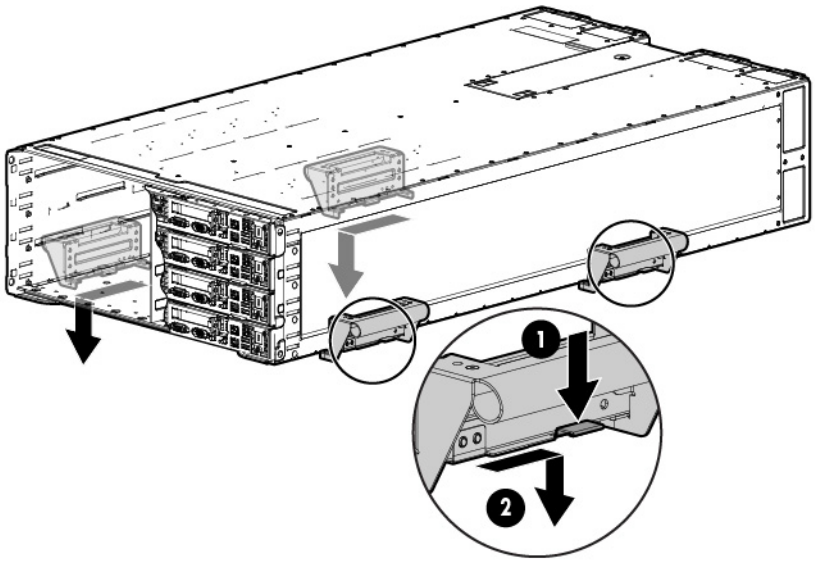

Installing the half-width node blank

IMPORTANT: Left and right node blanks are not interchangeable.

Insert the half-width left node blank into the left slots of the chassis.

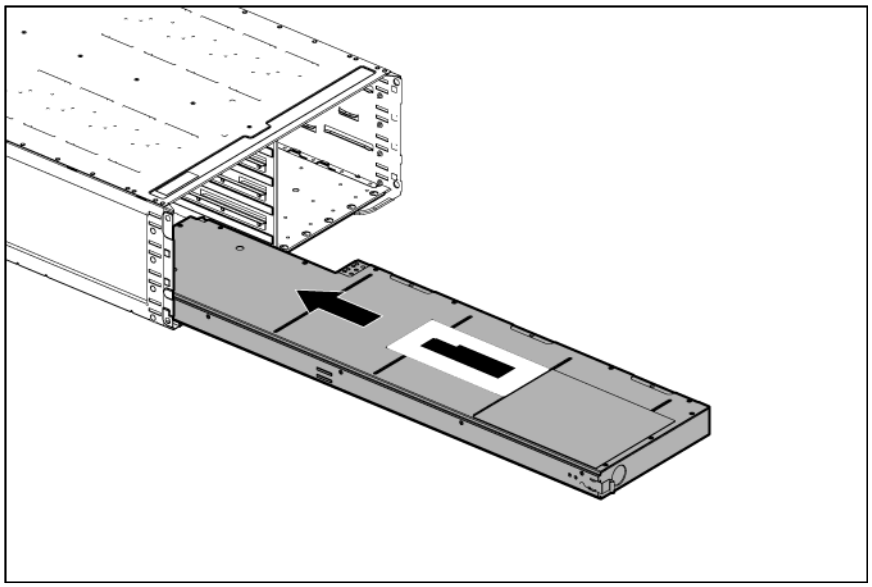

Insert the half-width right node blank into the right slots of the chassis.

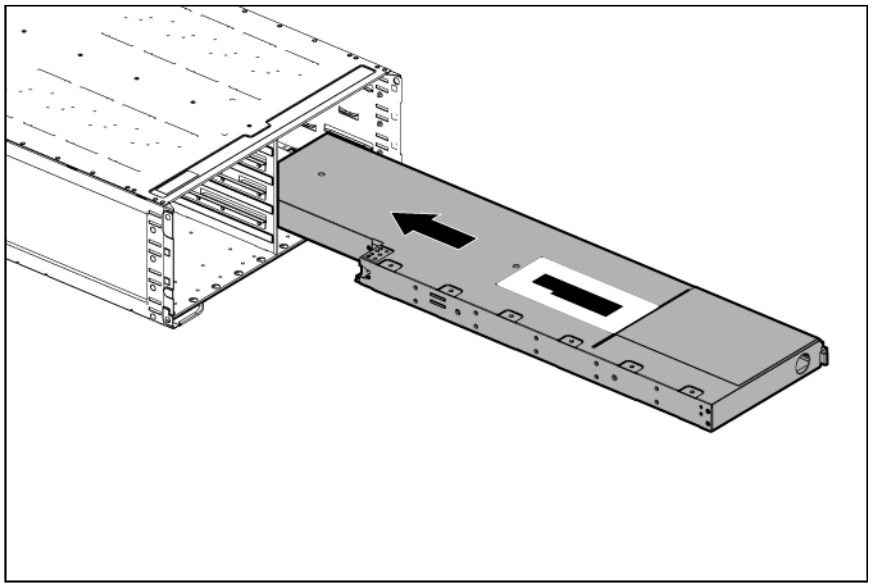

Installing the full-width node blank

Insert the full-width node blank into the chassis.

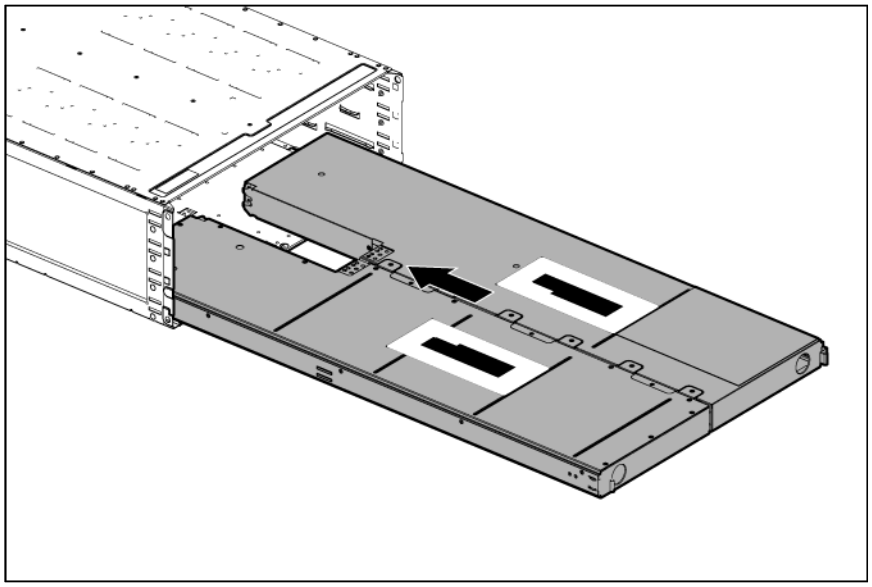

Removing the center wall

To support full-width tray configurations, remove the center wall. After removing the center wall, you can install full-width node or tray blanks.

NOTE: Half-width and full-width server trays cannot be mixed within a chassis.

1. Loosen the screws that secure the center wall to the top of the chassis.

2. Loosen the screws that secure the center wall to the bottom of the chassis.
3. Slide the center wall in the direction of the arrow indicated in the following figure.

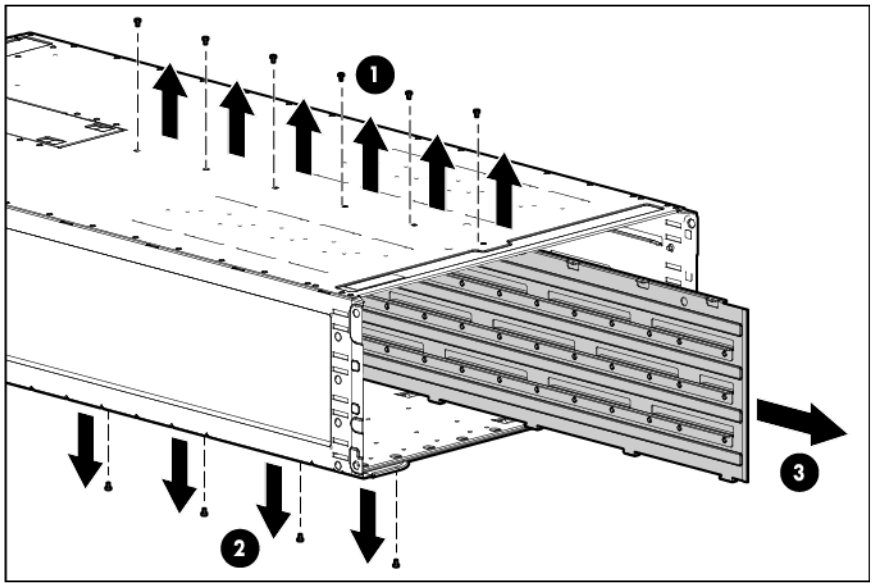

4. Rotate the center wall.
5. Remove the center wall from the chassis.
6. Install the full-width tray or blank.

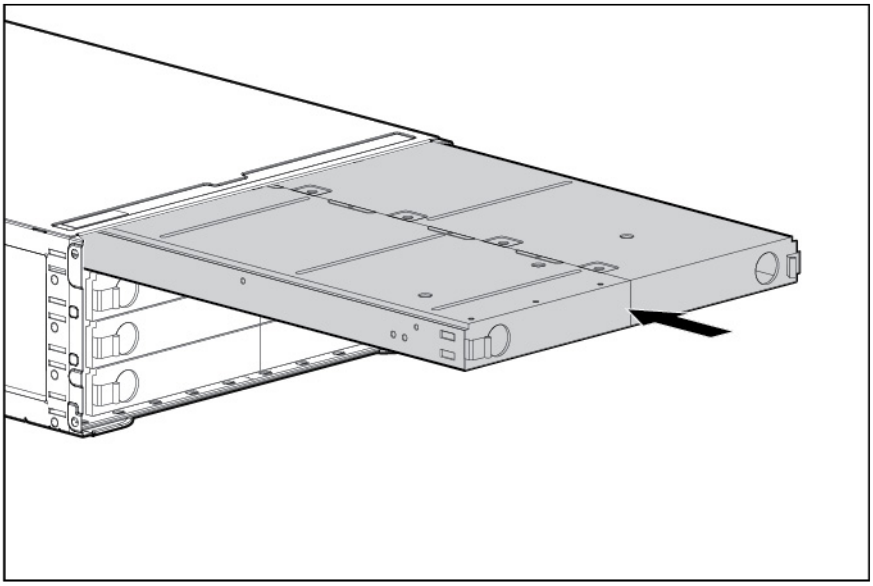

Cabling

Hardware installation

Scalable system hardware

The HP ProLiant s6500 Chassis is a modular server hardware system that is optimized for HP Rack 10000 Series and HP Intelligent Rack Series models that are at least 47.24 in (1200 mm) deep. These are universal industry standard RETMA 19-inch racks with proven air flow, proven cable management and high dynamic and static load capacity.

For more information about product features, specifications, options, configurations, and compatibility, see the product QuickSpecs on the HP website (http://www.hp.com/go/qs).

This guide provides best practices and overview procedures for installing the hardware in a rack and for connecting the different types of cabling for the scalable system.

The system is comprised of servers, of which several models are available, to match computing and storage needs. For more information about supported scalable system servers, see the HP website (http://www.hp.com/servers/proliant).

Other components required to support the system include the following:

- A rack
- PDUs
- Power distribution cables or extension bars
- Network switches (recommended)

This guide refers to the installation of various components. Before following the procedures in this guide, read and understand the various hardware installation documents for all associated scalable system components and options. Observe all safety information in those documents as well as the guidelines in this document.

Rack types and configurations

The HP ProLiant s6500 Chassis can be deployed in HP Rack 10000 Series, HP Intelligent Rack Series, Telco racks, and industry standard square-hole or round-hole racks.

Observe the following considerations for each rack type:

- HP Rack 10000 Series, HP Intelligent Rack Series—The scalable system is optimized for this rack series. When installed, servers are recessed, enabling the use of the front rack door and providing room for front cable routing in the vertical columns of the rack.
- Third-party square-hole and round-hole racks—The scalable system operates in industry standard racks but requires removal of the front rack door. Also, the increased depth requirement of s6500 chassis components means a rack extender might be necessary for this rack type.
- Telco rack—The scalable system mounts in a Telco rack. Cable routing and management can be more complicated for the user.

Rack compatibility

The s6500 chassis is optimized for racks that are at least 47.24 in (1200 mm) deep. The HP 10000 and HP Intelligent Rack Series meet this minimum depth requirement. Both series are industry standard RETMA 19-in racks with proven cable management and high dynamic and static load capacity.

Server chassis	HP 10000 Rack Series	HP Intelligent Rack Series	Third-party rack	Telco rack
s6500 chassis	47.24 in (1200 mm), extender required	47.24 in (1200 mm)	Minimum 1000 mm deep, RETMA 19-inch rails and sufficient load capacity	Minimum 1000 mm deep, RETMA 19-inch rails and sufficient load capacity

For more information about product features, specifications, options, configurations, and compatibility, see the product QuickSpecs on the HP website (http://www.hp.com/go/qs).

Cable management for third-party racks

For configurations with a third-party rack, HP recommends:

- Using the HP s6500 4U Third Party Rail Kit (PN 601946-B21) to manage the front chassis cabling (this might require the removal of the rack front door).
- Using the cable management bracket that ships with the 2U and 4U rack-mounting hardware kit. The following figure shows the cable management solution installed on a third-party rack.

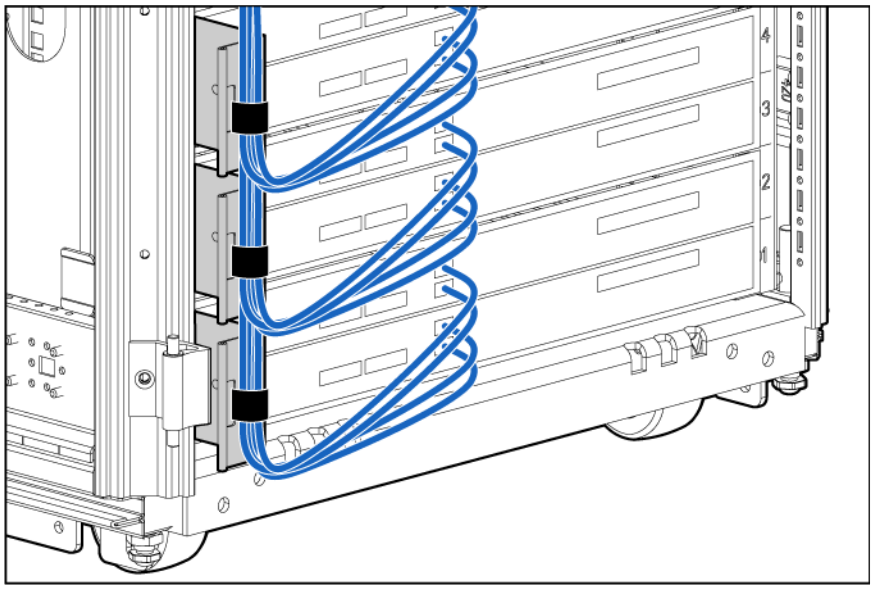

Optional installation services

Delivered by experienced, certified engineers, HP Care Pack services help you keep your servers up and running with support packages tailored specifically for HP ProLiant systems. HP Care Packs let you integrate both hardware and software support into a single package. A number of service level options are available to meet your needs.

HP Care Pack Services offer upgraded service levels to expand your standard product warranty with easy-to-buy, easy-to-use support packages that help you make the most of your server investments. Some of the Care Pack services are:

- Hardware support
  - 6-Hour Call-to-Repair
  - 4-Hour 24x7 Same Day
  - 4-Hour Same Business Day
- Software support
  - Microsoft®
  - Linux
  - HP ProLiant Essentials (HP SIM and RDP)
  - VMware
- Integrated hardware and software support
  - Critical Service
  - Proactive 24
  - Support Plus
  - Support Plus 24
- Startup and implementation services for both hardware and software

For more information on HP Care Pack Services, see the HP website (http://www.hp.com/services/carepack).

Optimum environment

When installing the server in a rack, select a location that meets the environmental standards described in this section.

Space and airflow requirements

When deciding where to install a rack, observe proper space and airflow requirements to allow for servicing and adequate airflow. For more information, see "Space and airflow requirements (on page 5)."

Temperature requirements

To ensure continued safe and reliable equipment operation, install or position the system in a well-ventilated, climate-controlled environment.

The maximum recommended ambient operating temperature (TMRA) for most server products is 35°C (95°F). The temperature in the room where the rack is located must not exceed 35°C (95°F).

CAUTION: To reduce the risk of damage to the equipment when installing third-party options:

- Do not permit optional equipment to impede airflow around the server or to increase the internal rack temperature beyond the maximum allowable limits.
- Do not exceed the manufacturer's TMRA.

Power requirements

Installation of this equipment must comply with local and regional electrical regulations governing the installation of information technology equipment by licensed electricians. This equipment is designed to operate in installations covered by NFPA 70, 1999 Edition (National Electric Code) and NFPA-75, 1992

(code for Protection of Electronic Computer/Data Processing Equipment). For electrical power ratings on options, refer to the product rating label or the user documentation supplied with that option.

WARNING: To reduce the risk of personal injury, fire, or damage to the equipment, do not overload the AC supply branch circuit that provides power to the rack. Consult the electrical authority having jurisdiction over wiring and installation requirements of your facility.

CAUTION: Protect the server from power fluctuations and temporary interruptions with a regulating uninterruptible power supply. This device protects the hardware from damage caused by power surges and voltage spikes and keeps the system in operation during a power failure.

When installing more than one server, you may need to use additional power distribution devices to safely provide power to all devices. Observe the following guidelines:

- Balance the server power load between available AC supply branch circuits.
- Do not allow the overall system AC current load to exceed 80% of the branch circuit AC current rating.
- Do not use common power outlet strips for this equipment.
- Provide a separate electrical circuit for the server.

Electrical grounding requirements

The server must be grounded properly for proper operation and safety. In the United States, you must install the equipment in accordance with NFPA 70, 1999 Edition (National Electric Code), Article 250, as well as any local and regional building codes. In Canada, you must install the equipment in accordance with Canadian Standards Association, CSA C22.1, Canadian Electrical Code. In all other countries, you must install the equipment in accordance with any regional or national electrical wiring codes, such as the International Electrotechnical Commission (IEC) Code 364, parts 1 through 7. Furthermore, you must be sure that all power distribution devices used in the installation, such as branch wiring and receptacles, are listed or certified grounding-type devices.

Because of the high ground-leakage currents associated with multiple servers connected to the same power source, HP recommends the use of a PDU that is either permanently wired to the building's branch circuit or includes a nondetachable cord that is wired to an industrial-style plug. NEMA locking-style plugs or those complying with IEC 60309 are considered suitable for this purpose. Using common power outlet strips for the server is not recommended.

Installation guidelines

Always install the scalable system in consecutive U spaces in the rack to optimize cooling, cabling, and management functions.

Before installing scalable system components and options, observe all safety information and guidelines in product-specific documentation. Also observe the following guidelines.

WARNING: To reduce the risk of personal injury or damage to the equipment, be sure that:

- The leveling feet are extended to the floor.
- The full weight of the rack rests on the leveling feet.
- The stabilizing feet are attached to the rack if it is a single-rack installation.
- The racks are coupled together in multiple-rack installations.
- Only one component is extended at a time. A rack may become unstable if more than one component is extended for any reason.

WARNING: When installing a server in a telco rack, be sure that the rack frame is adequately secured to the top and bottom of the building structure.

WARNING: A risk of personal injury from electric shock and hazardous energy levels exists. The installation of options and routine maintenance and service of this product must be performed by individuals who are knowledgeable about the procedures, precautions, and hazards associated with AC power products.

WARNING: A risk of personal injury from electric shock and hazardous energy levels exists. The installation of options and routine maintenance and service of this product must be performed by individuals who are knowledgeable about the procedures, precautions, and hazards associated with DC power products.

CAUTION: Electrostatic discharge (ESD) can damage electronic components. Be sure that you are properly grounded (earthed) before beginning any installation procedure.

CAUTION: Always plan the rack installation so that the heaviest item is on the bottom of the rack. Install the heaviest item first, and continue to populate the rack from the bottom to the top.

Cabling guidelines

Before connecting scalable system cabling, observe all safety information and guidelines in product-specific documentation. Also observe the following guidelines.

CAUTION: When connecting devices, distribute the loads evenly to remain within the capability of the extension bars.

CAUTION: When routing cables, always be sure that the cables are not in a position where they can be pinched or air flow can be blocked.

IMPORTANT: Connect power cords by starting at the bottom inside power outlet, working up to the top outside power outlet.

Installation overview for full-rack solutions

For ease of cabling, HP recommends a specific order for hardware installation and cable connections. You can use portions of the procedure, depending on the hardware in your configuration.

The number of power components is based on the number of servers and the power supply configuration. For more information, see "Power requirements and considerations."

For hardware-specific installation procedures, see the documentation that ships with each component.

To install hardware and connect cabling:

1. Install PDUs.
2. Install extension bars or power distribution cables.

   For an example, see "mPDU and fixed-cord extension bar configuration (on page 34)."
3. Install two 1U network switches in the middle of the rack (21U and 22U):
   - For Ethernet switches, install the switch with connectors at the front of the rack.

- For InfiniBand switches, install the switch with connectors at the rear of the rack.

4. Install the servers.
5. Connect power cabling:
   a. Connect power distribution cables and devices to the PDUs.
   b. Connect power distribution cables and devices to the server power supplies.

   For examples, see the following:
   - "Power cabling with extension bars (on page 35)"
   - "Power cabling with Y-cables (on page 37)"
6. Connect network cabling:
   a. Connect network cables to the servers.
   b. Connect network cables to the switches.
   c. Connect the switches to the external network.

   For examples, see the following:
   - "Network cabling with Ethernet switches (on page 41)"
   - "Network cabling with InfiniBand switches (on page 42)"
7. Connect facility power to the PDUs.
8. Apply facility power to the PDUs.
9. Power up the switches.
10. Power up the servers.

Power cabling

Power requirements and considerations

When calculating power for the scalable system, be sure to include power for network switches, UPS devices, and other options.

To supply adequate power to the scalable system, observe the power input requirements for each type of server power supply, and then provide the sufficient number of PDUs and distribution cables or devices.

Specification	750 W power supply	1200 W power supply
Rated input voltage	100 to 120 VAC 200 to 240 VAC	100 to 120 VAC 200 to 240 VAC
Rated input frequency	50 Hz to 60 Hz	50 Hz to 60 Hz
Rated input current	8.9 A at 100 VAC 4.3 A at 200 VAC	10 A at 100 VAC 4.9 A at 200 VAC
Rated input power (AC input)	857 W at 100 V 824 W at 200 V	930 W at 100 V 1348 W at 200 V
Btus per hour (AC input)	2892 at 120 V 2812 at 200 V to 240 V	3530 at 120 V 4600 at 200 V to 240 V

PDU support

The HP ProLiant s6500 Chassis uses PDUs to provide power to the servers. Many PDU configurations are possible. For rack-mounting instructions and locations, see the documentation provided with the PDU.

HP recommends using fixed-cord mPDUs to supply power to components in the rack.

Depending on the server power supply configuration, each mPDU (at high line voltage) can support the following:

- Up to 10 servers (with two power supplies each)
- Up to 20 servers (with one power supply each)

For a list of supported mPDUs, see the product QuickSpecs on the HP website (http://www.hp.com/go/qs).

To obtain supported mPDUs, contact an authorized reseller or see the HP website (http://www.hp.com/go/rackandpower).

Extension bar support

To distribute power from the PDUs, use the appropriate type of cables and power connector to connect to the server power supplies.

For servers with 750-W power supplies, HP recommends using fixed-cord extension bars with mPDUs.

An HP fixed-cord extension bar has four cords with power connectors. Depending on the server power supply configuration, each extension bar can support the following:

- Up to two servers (with two power supplies)
- Up to four servers (with one power supply)

For a fully configured 42U rack with two switches and 20 servers with 2 power supplies, 11 extension bars are required.

For a list of supported extension bars, see the product QuickSpecs on the HP website (http://www.hp.com/go/qs).

To obtain supported extension bars, contact an authorized reseller or see the HP website (http://www.hp.com/go/rackandpower).

Power cabling configurations

Many power cabling configurations are possible, including the following examples.

In some installations, multiple racks are installed in close proximity to each other. Mounting the PDUs in a 0-U configuration is impractical. In these instances, the following examples apply:

- Bottom-mounted mPDU and fixed-cord extension bar configuration (on page 39)
- Power cabling with Y-cables and bottom-mounted PDU (on page 40)

For single racks (including separated racks), possible power cabling configurations include the following:

- mPDU and fixed-cord extension bar configuration (on page 34)
- Power cabling with extension bars (on page 35)
- Power cabling with Y-cables (on page 37)

mPDU and fixed-cord extension bar configuration

The following figure shows a 42U rack with two mPDUs installed in a zero-U configuration. Five fixed-cord extension bars are connected to each mPDU.

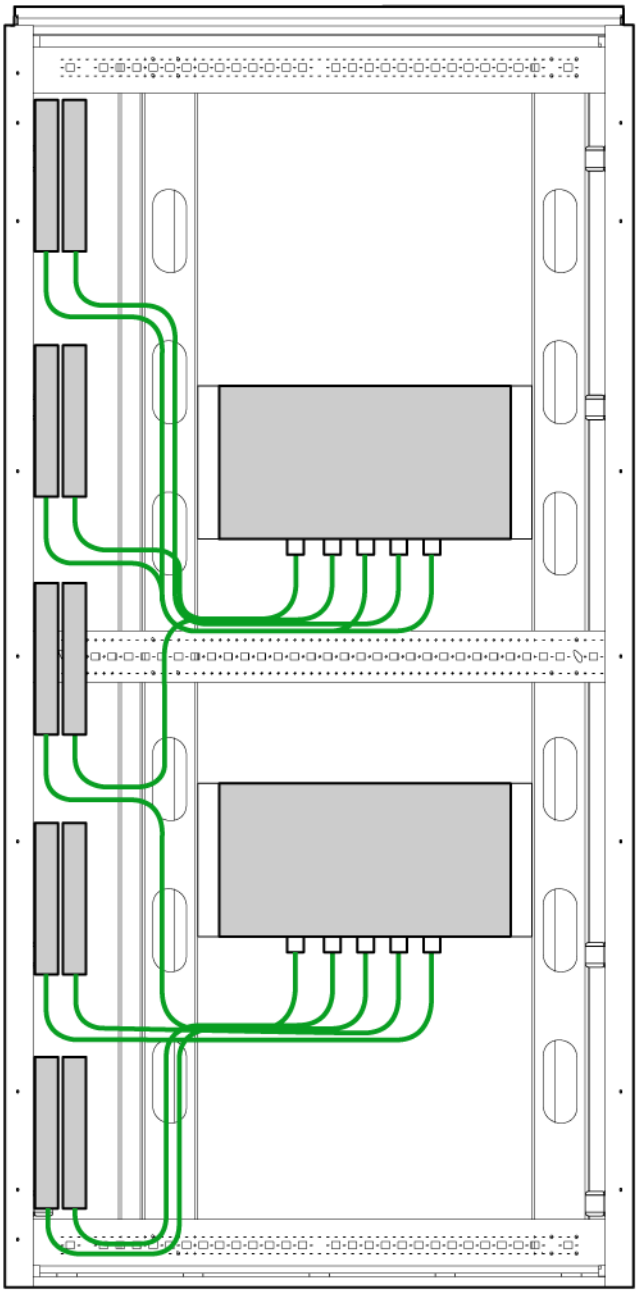

Item	Description
1	Facility power cabling
2	Fixed-cord extension bar
3	Fixed-cord mPDU

Power cabling with extension bars

Fixed-cord extension bars enable you to reduce traditional power cabling with the following methods:

- Eliminating standard-length power cords for each server power supply
- Aggregating server cabling into fewer PDU connections

The following figure shows the back of a fully-configured 42U rack with different types of scalable system servers. The top half of the rack is configured for servers with two power supplies, while the bottom half of the rack is configured for servers with a single power supply. Newer extension bars might have seven cords per bar.

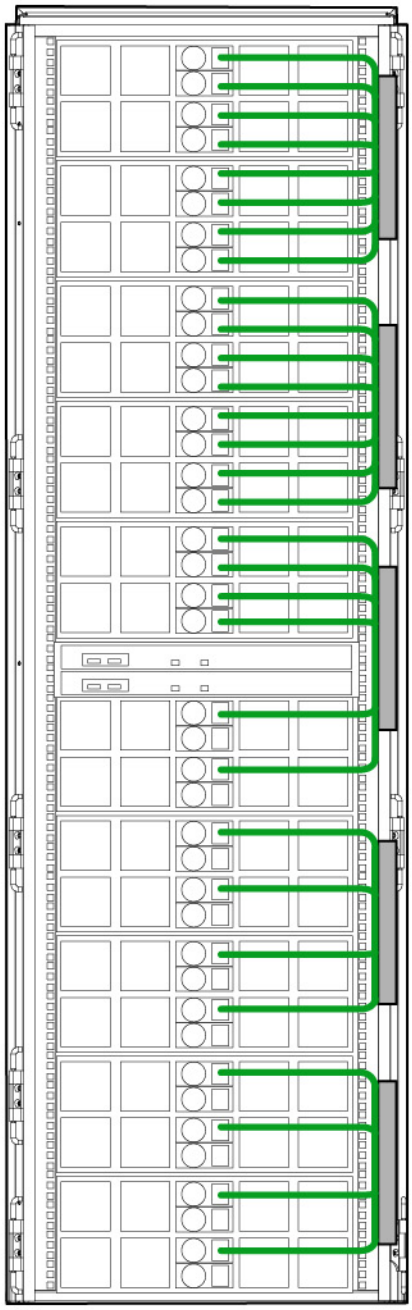

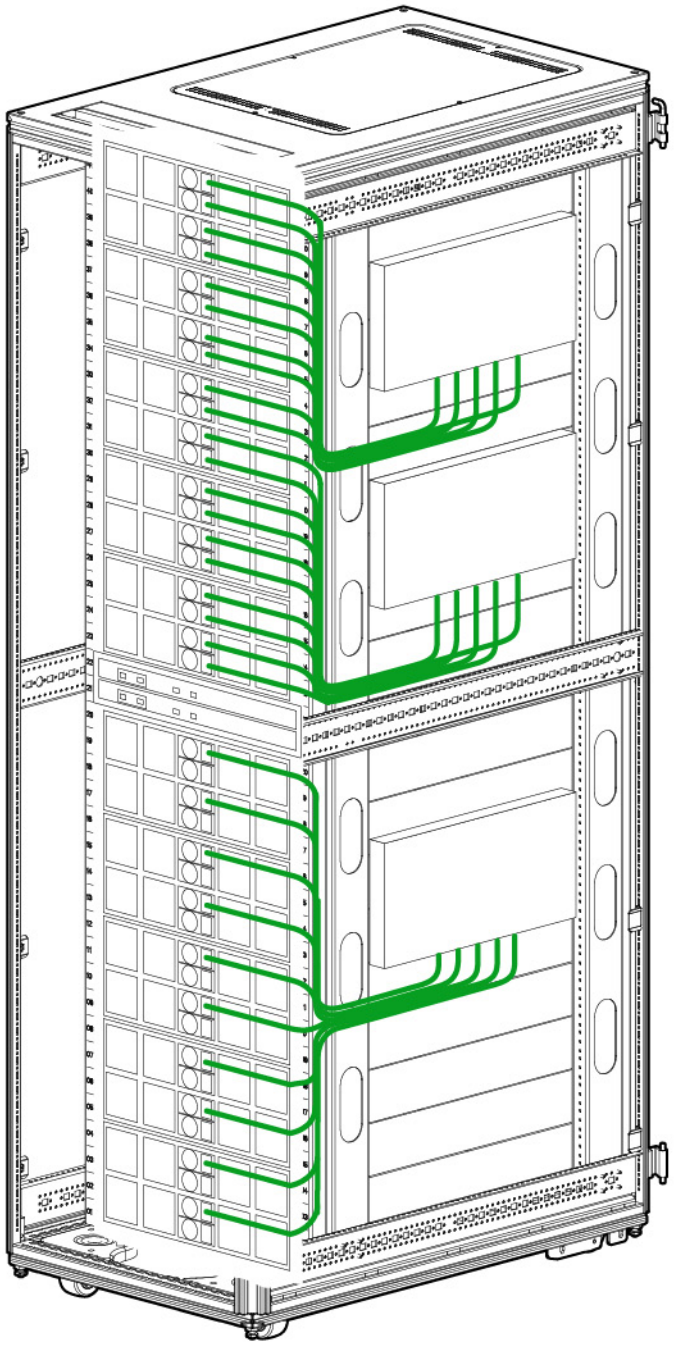

Power cabling with Y-cables

For servers with 1200-W power supplies, Y-cables are specialized power cords that connect two power supplies to a single C19 PDU outlet. Y-cables eliminate the need for extension bars (power strips) and can provide lower cost, easier installation, and less clutter in the rack.

The following figure shows the side and back of a fully-configured 42U rack with different types of scalable system servers. The top half of the rack is configured for servers with two 1200-W power supplies, while the bottom half of the rack is configured for servers with one 1200-W power supply. The PDUs shown are 3-phase PDUs.

For illustration purposes only, the right rear rack column is removed to show cable routing.

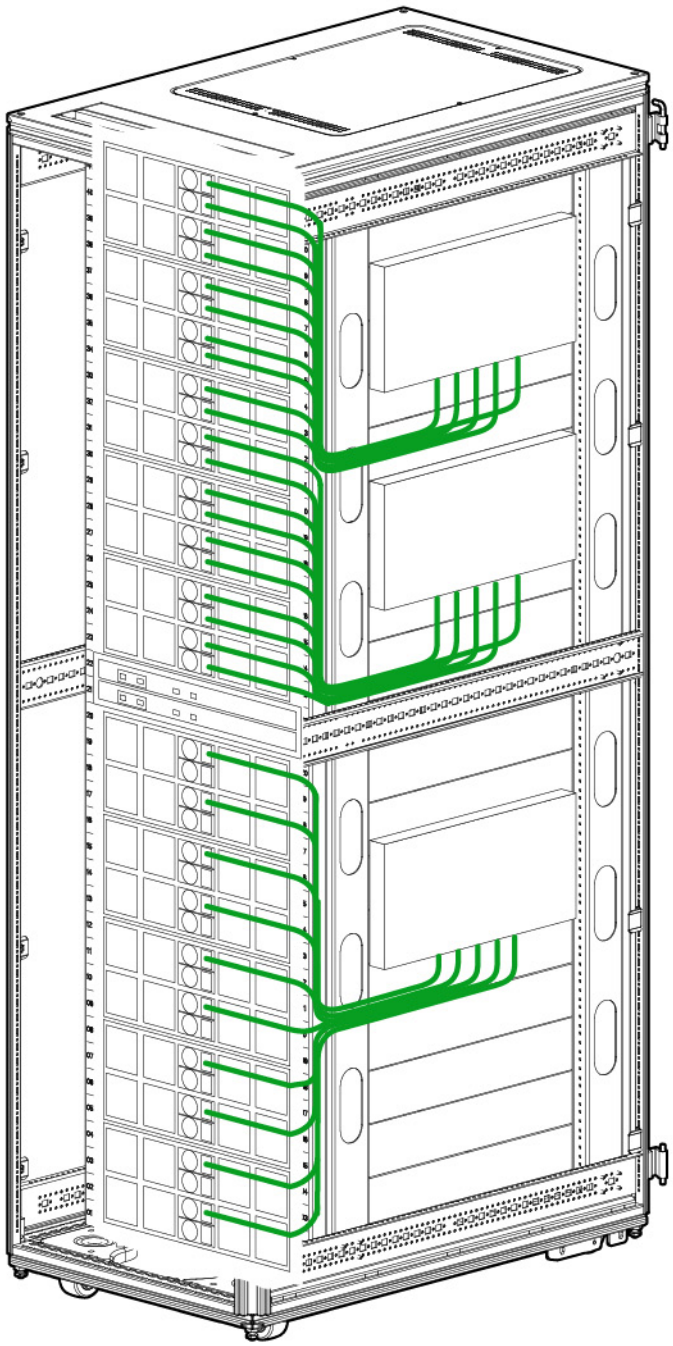

Bottom-mounted mPDU and fixed-cord extension bar configuration

The following figure shows a 42U rack with two 3-phase mPDUs installed in the bottom of the rack. Five fixed-cord extension bars are connected to each mPDU. The cables to the extension bars are routed from the back of the mPDUs.

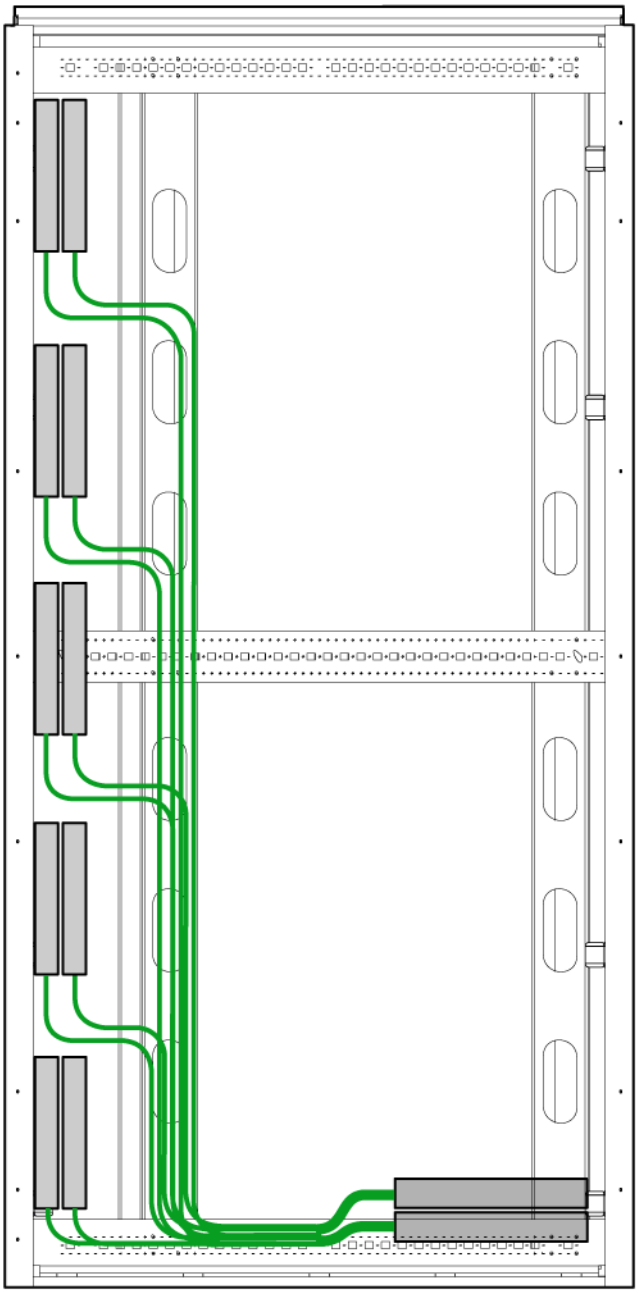

Item	Description
1	Facility power cabling
2	Fixed-cord extension bar
3	Fixed-cord mPDU

Power cabling with Y-cables and bottom-mounted PDU

For servers with 1200-W power supplies, Y-cables are specialized power cords that connect two power supplies to a single C19 PDU outlet. Y-cables eliminate the need for extension bars (power strips) and can provide lower cost, easier installation, and less clutter in the rack.

The following figure shows the side and back of a 42U rack with different types of scalable system servers. The top half of the rack is configured for servers with two 1200-W power supplies, while the bottom half of the rack is configured for servers with one 1200-W power supply.

For illustration purposes only, the right rear rack column is removed to show cable routing.

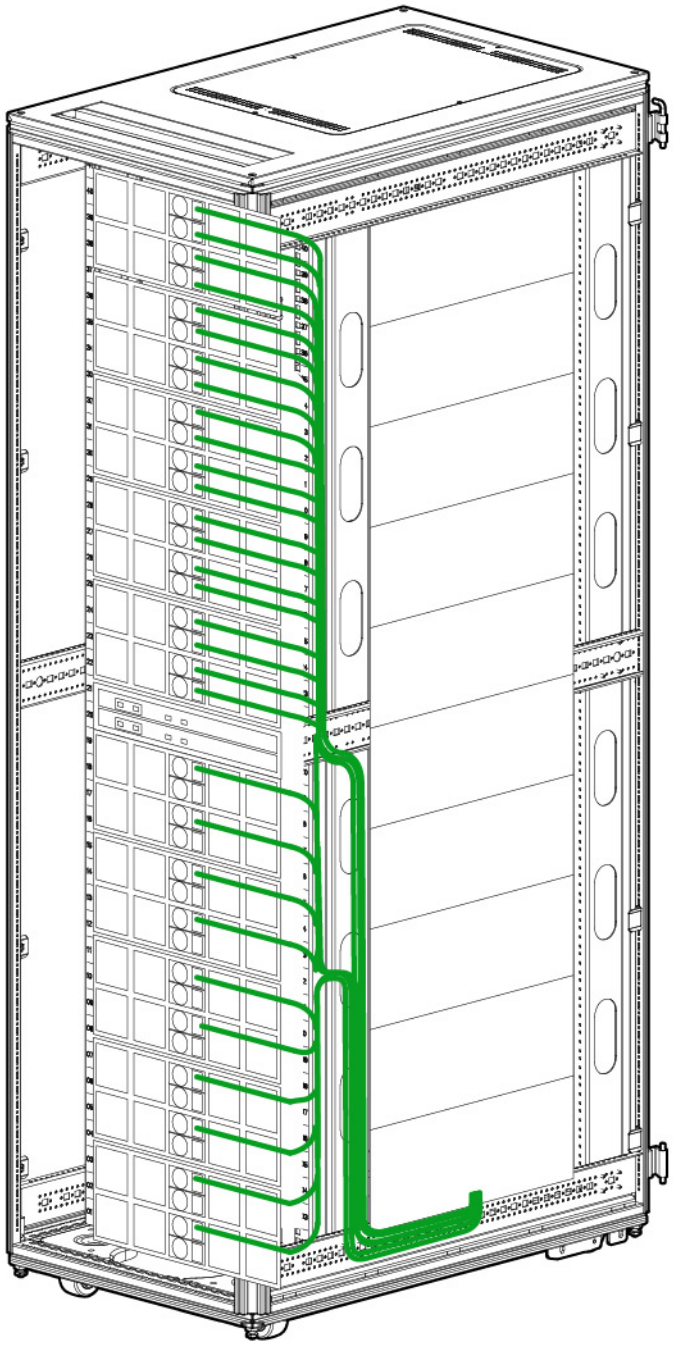

Network cabling

Network adapter and switch support

Each server model in the HP ProLiant s6500 Chassis supports a network adapter with at least one connector. For server-specific connector locations, see the server installation sheet that ships with the server.

For a fully configured 42U rack, HP recommends installing two 1U switches at the 21U and 22U positions in the rack. Locating the switches in other positions is supported, but routing cables for those configurations can be more challenging.

For a list of supported switches, see the product QuickSpecs on the HP website (http://www.hp.com/go/qs).

To obtain supported switches, contact an HP authorized reseller or see the HP website (http://www.procurve.com).

Network cabling configurations

Many network cabling configurations are possible, including the following examples:

- Network cabling with Ethernet switches (on page 41)
- Network cabling with InfiniBand switches (on page 42)

Network cabling with Ethernet switches

By mounting Ethernet switches in the middle of the rack, you can use shorter network cables and further reduce cable bulk by dividing cable routing between the front left and right columns and between the top and bottom of the rack.

The following figure shows the front of a fully configured rack with two 1U Ethernet switches and different types of scalable system servers. Adapter cabling consists of standard network cables with RJ-45 connectors.

The servers in the bottom half of the rack have a redundant adapter cabling configuration.

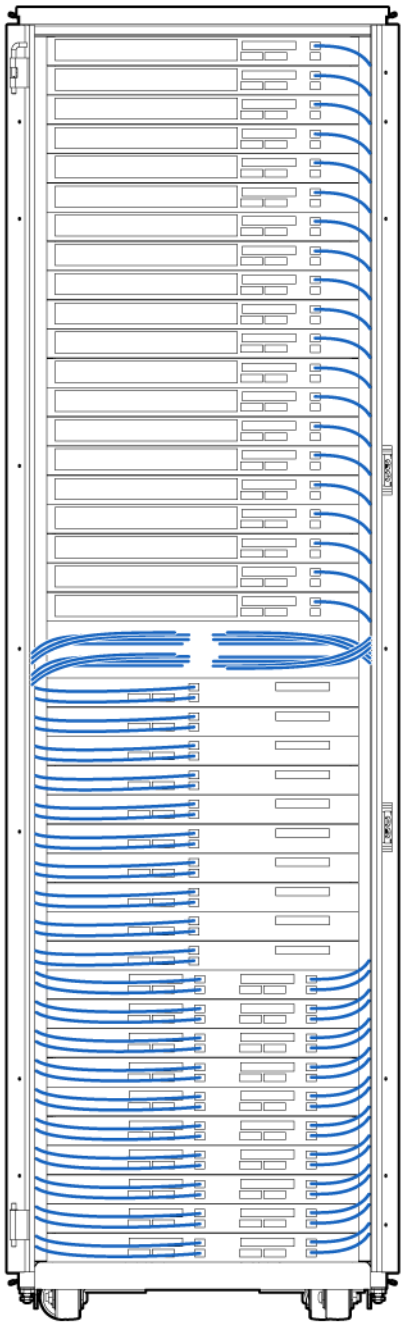

Network cabling with InfiniBand switches

By mounting InfiniBand switches with connectors at the rear of the rack, you can eliminate in-rack routing and bending of the InfiniBand cables from the external network. This configuration also keeps the InfiniBand connections isolated at the back of the rack, reducing physical interference with SFP transceivers.

The following figure shows a fully configured rack with two 1U Infiniband switches and different types of scalable system servers. Adapter cabling consists of QDR cables with QSFP connectors. Connections from the servers to the switches show cabling that routes from the front to the rear of the rack.

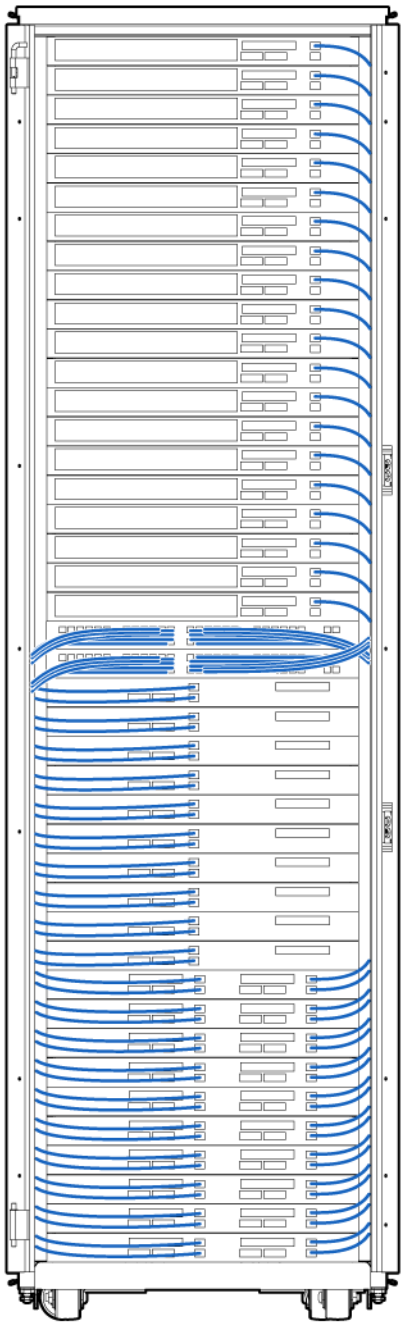

Using the HP Advanced Power Manager

HP APM overview

HP Advanced Power Manager is a single point of contact for HP ProLiant Scalable System administration.

To install, configure, and access HP Advanced Power Manager, see the HP Advanced Power Manager User Guide (http://www.hp.com/support/APM_UG_en).

Best practices

Three-phase balancing

The optimal phase balancing in the enclosure is 2%, but 5% or less can be accomplished when the following criteria are met:

- The same type of power supplies are used.
- Nodes draw a 50% load.
- No power supply is in a failed state.

Cable each s6500 chassis so that each power supply receives one feed from each phase.

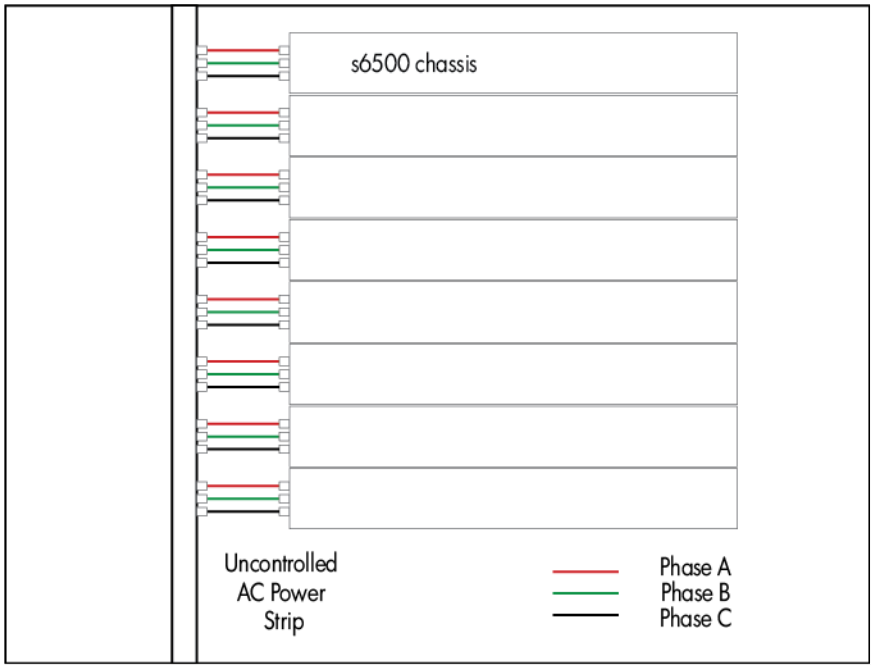

3+1 redundant mode and 4 single-ended nonredundant mode

Cable each s6500 chassis to support a single-ended configuration.

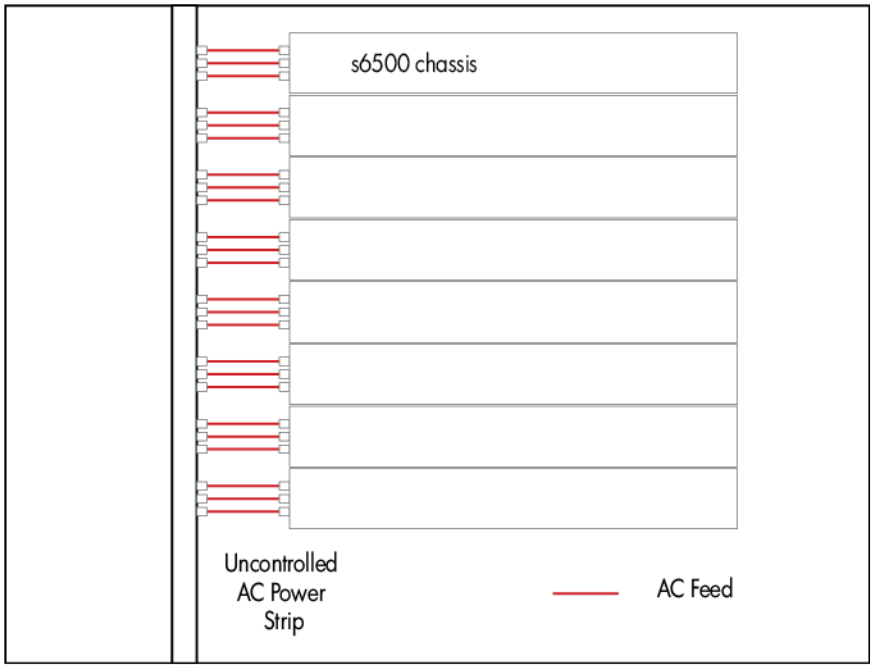

Support and other resources

Before you contact HP

Be sure to have the following information available before you call HP:

- Active Health System log (HP ProLiant Gen8 or later products)

  Download and have available an Active Health System log for 3 days before the failure was detected. For more information, see the *HP iLO 4 User Guide* or *HP Intelligent Provisioning User Guide* on the HP website (http://www.hp.com/go/ilo/docs).
- Onboard Administrator SHOW ALL report (for HP BladeSystem products only)

  For more information on obtaining the Onboard Administrator SHOW ALL report, see the HP website (http://www.hp.com/go/OAlog).
- Technical support registration number (if applicable)
- Product serial number
- Product model name and number
- Product identification number
- Applicable error messages
- Add-on boards or hardware
- Third-party hardware or software
- Operating system type and revision level

HP contact information

For United States and worldwide contact information, see the Contact HP website (http://www.hp.com/go/assistance).

In the United States:

- To contact HP by phone, call 1-800-334-5144. For continuous quality improvement, calls may be recorded or monitored.
- If you have purchased a Care Pack (service upgrade), see the Support & Drivers website (http://www8.hp.com/us/en/support-drivers.html). If the problem cannot be resolved at the website, call 1-800-633-3600. For more information about Care Packs, see the HP website (http://pro-aq-sama.houston.hp.com/services/cache/10950-0-0-225-121.html).

Acronyms and abbreviations

CSA

Canadian Standards Association

ESD

electrostatic discharge

HP APM

HP Advanced Power Manager

IEC

International Electrotechnical Commission

iLO

Integrated Lights-Out

mPDU

modular power distribution unit

PDU

power distribution unit

PFC

power factor corrected

POD

Performance-Optimized Datacenter

PSU

power supply unit

QDR

quad data rate

QSFP

quad small form-factor pluggable

RCM

Remote Console Module

RDP

Rapid Deployment Pack

RETMA

Radio Electronics Television Manufacturers Association (rack spacing)

SFP

small form-factor pluggable

SIM

Systems Insight Manager

TMRA

recommended ambient operating temperature

UID

unit identification

UPS

uninterruptible power system

Documentation feedback

HP is committed to providing documentation that meets your needs. To help us improve the documentation, send any errors, suggestions, or comments to Documentation Feedback (mailto:docsfeedback@hp.com). Include the document title and part number, version number, or the URL when submitting your feedback.

Index

A

airflow requirements 5, 29
authorized reseller 47

B

backplane, power supply 12
best practices 45, 46

C

cable management brackets, installing 28
cables, networking 41, 42
cables, PDU 34, 35, 37, 39
cabling 27, 45, 46
cabling guidelines 31
Care Pack 28
center wall 25
chassis handles, installing 23
chassis, install in rack 16, 18, 21
components, identification 7
configuration requirements 6
contacting HP 47
customer self repair (CSR) 47

E

earth leakage current 5
electrical grounding requirements 30
environmental requirements 29
Ethernet switches 41
extension bars 34, 35, 39, 40

F

fan LED 8
fan module location 9, 10
fan modules, installation 11
fan modules, removal 10
features 5
front panel components 7

G

grounding requirements 5, 30
guidelines, cabling 31
guidelines, installation 30

H

hardware installation 27
help resources 47
HP Advanced Power Manager (HP APM) 44
HP technical support 47
HP website 47

I

InfiniBand 42
installation guidelines 30
installation overview 5, 31
installation services 28

L

LEDs, fan 8
LEDs, power supply 8
LEDs, unit identification (UID) 8

N

network cable 41, 42
node blank 24, 25

O

optimum environment 29

P

PDU installation 31, 34, 39
power allocation 45
power cables 32, 33, 34, 35, 37, 39, 40
power distribution unit (PDU) 30, 34, 39
power requirements 29
power supplies 11
power supply backplane 12, 13
power supply LEDs 8
power supply, installing 14
power supply, removing 14
preparation procedures 5

R

rack installation 16, 18, 21, 28, 31
rack options 16, 18, 21
rack stability 30
racks 27
rails, installing 16, 18, 21
rear panel LEDs 8
redundant cabling configuration 46
requirements, airflow 5
requirements, environmental 5, 29
requirements, power 5, 29
requirements, space 5
requirements, temperature 5, 29

S

shipping bracket, installing 16, 18, 21
site requirements 29
space requirements 5
support 47
switches 41, 42

T

technical support 47
telco racks 27, 30
temperature requirements 29
third-party racks 21, 27
three-phase AC configuration 45

U

UID LED 8
uninterruptible power supply (UPS) 29

V

ventilation 29

W

website, HP 47