HP ProLiant SL Server Site Planning Guide

Abstract

This guide is for an experienced service technician. HP assumes you are qualified in the servicing of computer equipment and trained in recognizing hazards in products with hazardous energy levels and are familiar with weight and stability precautions for rack installations.



Part Number: 667154-002
September 2013
Edition: 2

© Copyright 2012, 2013 Hewlett-Packard Development Company, L.P.

The information contained herein is subject to change without notice. The only warranties for HP products and services are set forth in the express warranty statements accompanying such products and services. Nothing herein should be construed as constituting an additional warranty. HP shall not be liable for technical or editorial errors or omissions contained herein.

Confidential computer software. Valid license from HP required for possession, use or copying. Consistent with FAR 12.211 and 12.212, Commercial Computer Software, Computer Software Documentation, and Technical Data for Commercial Items are licensed to the U.S. Government under vendor's standard commercial license.

Contents

Introduction 5
About this document 5
Related documentation 5
Environmental requirements 7
Environmental elements 7
Humidity level 7
Dust and pollution 7
Metallic particulate contamination 8
Electrostatic discharge prevention 9
Acoustic noise specification 9
Recommended operating environment 10
Airflow requirements 11
Blanking panels 11
HP Rack Airflow Optimization Kit 11
Space requirements 11
Delivery space requirements 12
Operational space requirements 12
Equipment clearance and floor loading 12
Floor plan grid 13
Environmental specifications 14
Rack and accessory footprints 14
Front door clearance 15
Best practices for deployment in rows 18
Rack placement and arrangement for proper airflow 19
Rack tie-down option kit 20
Power requirements and considerations 21
Power requirements 21
Electrical factors 21
Power consumption 22
Electrical load requirements (circuit breaker sizing) 23
Power quality 23
Power considerations 24
Distribution hardware 25
Grounding requirements 25
Grounding systems 26
System installation guidelines 29
Power configuration 29
SL Rack/Chassis Dynamic Power Capping 29
Single-phase AC configuration 30
Power supply specifications 30
Hardware specifications and requirements 31
Chassis specifications 31
HP 10000 G2 rack specifications 31
Rack requirements 31

Rack-free environment requirements 32
Configuration scenarios 33
Example configurations 33
Estimating power and cooling 33
Estimating total weight 34
Preparing for installation 35
Warnings and cautions 35
Additional rack considerations 36
General component placement guidelines 36
Rack configuration software 37
Sample installation schedule 38
Sample checklists 38
Delivery survey 40
Conversion factors and formulas 42
Conversion factors 42
Formulas 42
Support and other resources 43
Before you contact HP 43
HP contact information 43
Acronyms and abbreviations 44
Documentation feedback 46
Index 47

Introduction

About this document

This document helps facilities and IT staff plan for the receipt and installation of HP ProLiant SL Server products in a dedicated computer facility.

The document is structured as follows:

- General site preparation guidelines

  This section provides an overview of general site requirements to prepare your computer room facility to accept server hardware.

- Environmental requirements (on page 7)

  This section provides information on the environmental site requirements, including temperature, airflow, and space requirements.

- Power requirements and considerations (on page 21)

  This section details the power requirements and electrical factors that must be considered before installation. This section also discusses PDU installation.

- Hardware specifications and requirements (on page 31)

  This section provides system specifications for the HP ProLiant chassis, HP 10000 and HP 10000 G2 series racks, and single-phase and three-phase power sources.

- Configuration scenarios (on page 33)

  This section provides examples of maximum and typical rack configurations using server products, and worksheets to help determine power usage and total solution weight.

- Preparing for installation (on page 35)

  This section includes tools and information to help prepare for server product delivery and installation.

Related documentation

For the latest documentation, see the HP website (http://www.hp.com/support/SL_servers).

The HP ProLiant SL Server support technical resources website includes white papers, tech briefs, installation instructions, user guides, best practices, helpful hints, useful links, and suggestions for setting up and configuring server products. Use this website to do the following:

- Learn about server technology.
- Plan a total server solution.
- Install the components of a server system solution.
- Integrate a server solution and understand how it connects to the outside world.
- Use and manage a server system solution and understand the best way to make it work.

For additional information about server management, see the Information Library (http://isscontent.cca.hp.com/products/servers/management/unified/gen_8.html).

Environmental requirements

Environmental elements

The following environmental elements can affect HP ProLiant SL Server product installation.

Humidity level

Maintaining proper humidity levels in the computer room is essential for reliable equipment performance. Humidity levels outside the recommended range of 25% to 45%, especially if these levels are sustained, lead to equipment damage and result in equipment malfunction through several mechanisms.

High humidity levels enable galvanic activity to occur between dissimilar metals. Galvanic activity can cause high resistance to develop between connections and lead to equipment malfunctions and failures. Extended periods of humidity levels greater than 60% have also been shown to adversely affect modern printed circuit board reliability. High humidity can also adversely affect some magnetic tapes and paper media.

High humidity levels are often the result of malfunctioning facility air conditioning systems. High humidity can also be the result of facility expansion in excess of air conditioning system capacity.

Humidity levels below the minimum recommended value can also have undesirable effects. Low humidity contributes to high ESD voltage potentials. ESD events can cause component damage during service operations and equipment malfunction or damage during normal operation. Low humidity levels can reduce the effectiveness of static dissipating materials and have also been shown to cause high speed printer paper feed problems.

Low humidity levels are often the result of the facility heating system and occur during the cold season. Most heating systems cause air to have a low humidity level, unless the system has a built-in humidifier.

ASHRAE and representatives of IT equipment manufacturers recommend a range of 18°C dry bulb with a 5.5°C dew point temperature to 27°C dry bulb with a 5.5°C dew point temperature. Over this range of dry bulb temperature with a 5.5°C dew point, the relative humidity varies from approximately 25% to 45%.

For more information on humidity levels, see the ASHRAE website (http://www.ashrae.org).

Dust and pollution

Dust and microscopic particles in the site environment adversely affect computer equipment. Airborne abrasive particles can cause bearing failures in disk drives, tape drives, and other mechanical devices. Dust may also blanket electronic components and printed circuit boards, causing premature failure because of excess heat, humidity buildup, or both.

Conductive metallic particles can cause power supply and other electronic component failures. A build-up of these metallic particles over time can cause short circuits on the densely packed circuit boards common in modern electronics. Use every effort to ensure that the environment is as dust- and particulate-free as possible. See "Metallic particulate contamination (on page 8)."

Smaller particles can pass through some filters, and over time, cause problems in mechanical parts. Selection of the appropriate filter media and maintaining the air conditioning system at a high static air pressure level can prevent small dust particles from entering the computer room.

Other dust, metallic, conductive, abrasive, or microscopic particles can result from the following sources:

- Subfloor shedding
- Raised floor shedding
- Ceiling tile shedding

These particulates are not always visible to the naked eye. A good method to determine their possible presence is to check the underside of the tiles. The tile should be shiny, galvanized, and free from rust.

To minimize dust and pollution in the computer room, observe the following guidelines:

- **Smoking**—Establish a no-smoking policy. Cigarette smoke particles are eight times larger than the clearance between disk drive read/write heads and the disk surface.
- **Printer location**—Locate printers and paper products in a separate room to eliminate paper particulate problems.
- **Eating or drinking**—Establish a no-eating or drinking policy. Spilled liquids can cause short circuits in equipment such as keyboards.
- **Floor cleaning**—Use a dust-absorbent cloth mop rather than a dry mop to clean tile floors.

Special precautions are necessary if the computer room is near a source of air pollution. Some air pollutants, especially hydrogen sulfide (H_2S), are not only highly toxic and unpleasant but corrosive as well. Hydrogen sulfide damages wiring and electronic equipment. The use of activated charcoal filters reduces this form of air pollution.

Metallic particulate contamination

Metallic particulates can be especially harmful around electronic equipment. This type of contamination can enter the data center environment from a variety of sources, including but not limited to raised floor tiles, worn air conditioning parts, heating ducts, rotor brushes in vacuum cleaners, or printer component wear. Because metallic particulates conduct electricity, they have an increased potential for creating short circuits in electronic equipment. This problem is exaggerated by the increasingly dense circuitry of electronic equipment.

Over time, very fine whiskers of pure metal can form on electroplated zinc, cadmium, or tin surfaces. If these whiskers are disturbed, they may break off and become airborne, possibly causing failures or operational interruptions. For more than 50 years, the electronics industry has been aware of the relatively rare but possible threat posed by metallic particulate contamination. During recent years, a growing concern has developed in computer rooms where these conductive contaminants are formed on the bottom of some raised floor tiles.

Although this problem is relatively rare, it may be an issue within your computer room. Because metallic contamination can cause permanent or intermittent failures on your electronic equipment, HP strongly recommends that your site be evaluated for metallic particulate contamination before installation of electronic equipment.

Electrostatic discharge prevention

Static charges (voltage levels) occur when objects are separated or rubbed together. The voltage level of a static charge is determined by the following factors:

- Types of materials
- Relative humidity
- Rate of change or separation

Follow these precautions to minimize possible ESD-induced failures in the computer room:

- Maintain recommended humidity level and airflow rates in the computer room.
- Install conductive flooring (conductive adhesive must be used when laying tiles).
- Use conductive wax if waxed floors are necessary.
- Ensure that all equipment and flooring are properly grounded and are at the same ground potential.
- Use conductive tables and chairs.
- Use a grounded wrist strap (or other grounding method) when handling circuit boards.
- Store spare electronic modules in antistatic containers.

Acoustic noise specification

The declared noise emission values for the HP ProLiant chassis in accordance with ISO 9296 are listed in the following table.

Specification	**Value**
Declared sound power level, LWAd Bels	—
Idle	7.5
Operating	7.5
Declared sound pressure level, LpAm dBA	—
Idle	57
Operating	57

Detailed information on conformance to country Technical Regulations and certificates of conformance can be found on the HP website (http://www.hp.com/go/certificates).

The levels specified in the previous table are appropriate for dedicated computer room environments, not office environments.

You must consider the acoustic noise specifications relative to operator positions within the computer room when adding additional systems to computer rooms with existing noise sources.

You can reduce ambient noise level in a computer room using the following methods:

- Dropped ceiling—Cover with a commercial grade of fire-resistant, acoustic rated, fiberglass ceiling tile.
- Sound deadening—Cover the walls with curtains or other sound deadening material.
- Removable partitions—Use foam rubber models for most effectiveness.

Recommended operating environment

To help ensure continued safe and reliable equipment operation, install or position the rack in a well ventilated, climate-controlled environment.

Air inlet temperature to the rack should be between 20°C to 25°C (68°F to 77°F) under normal operating conditions in the data center, per ASHRAE standard TG9 HDEC.

The following table shows product technical requirements based on customer environments.

Operating Environment (ambient)[1]

Environment	Industry equivalent[3] ASHRAE	Dry bulb temperature[2] Recommended[6] (Allowable[4,5])	Relative humidity, noncondensing Recommended[6] (Allowable[5])	Dew point (max)[7]	Rate of change (max)
Controlled computer room	1	20°C to 25°C (15°C to 32°C) 68°F to 77°F (59°F to 90°F)	40% to 55% (20% to 80%)	17.0°C 62.6°F	5°C/hr 41°F/hr
Controlled office	2	20°C to 25°C (10°C to 35°C) 68°F to 77°F (50°F to 95°F)	40% to 55% (20% to 80%)	21.0°C 69.8°F	5°C/hr 41°F/hr
Uncontrolled office	3	NA[8] (5°C to 35°C) NA[8] (41°F to 95°F)	NA[8] (8% to 85%)	28.0°C 82.4°F	NA[8]
Home	3	NA[8] (5°C to 35°C) NA[8] (41°F to 95°F)	NA[8] (8% to 85%)	28.0°C 82.4°F	NA[8]
Light industrial	4	NA[8] (5°C to 40°C) NA[8] (41°F to 104°F)	NA[8] (8% to 90%)	28.0°C 82.4°F	NA[8]
Portable/mobile	4	NA[8] (5°C to 40°C) NA[8] (41°F to 104°F)	NA[8] (8% to 90%)	28.0°C 82.4°F	NA[8]
Special[9]	—	—	—	—	—

[1] The maximum elevation for all operating environmental classes is 3050 m (10,007 ft).
[2] Dry bulb temperature is the regular ambient temperature. Derate maximum dry bulb temperature 1°C/300 m above 900 m (34°F/984 ft above 2,953 ft).
[3] The values in each row meet or exceed the stated industry equivalent class specifications.
[4] With installed media, the minimum temperature is 10°C (50°F) and maximum relative humidity is limited to 80%. Specific media requirements may vary.
[5] Allowable: equipment design extremes as measured at the equipment inlet.
[6] Recommended: target facility design and operational range.
[7] Must be noncondensing environment.
[8] Local product groups must make business decisions for the appropriate values.
[9] Product specifications are controlled by contract or other requirements.

The operating temperature inside the rack is always higher than the room temperature and is dependent on the configuration of equipment in the rack. Check the TMRA for each piece of equipment before installation.

△ **CAUTION:** To reduce the risk of damage to the equipment when installing third-party options:

- Do not permit optional equipment to impede airflow around the chassis or to increase the internal rack temperature beyond the maximum allowable limits.
- Do not exceed the manufacturer's TMRA.

Airflow requirements

HP rack-mountable products typically draw in cool air through the front and exhaust warm air out through the rear of the rack. The front door of the rack must be ventilated adequately to enable ambient room air to enter the rack with as little restriction as possible. Likewise, the rear door must offer as little restriction as possible to the warm air escaping from the rack.

The free area of a door determines the amount of airflow that can pass through the doors. Rack doors must have a minimum of 63% free area compared to the total area of the door. Some doors appear to have sufficient free area but do not.

To prevent air recirculation from the rear of the rack, the computer room air conditioning system must deliver sufficient airflow to the front of the rack to meet the airflow requirements of the installed equipment in the rack. Idle, normally operating, and maximum airflow requirements for server configurations can be obtained from the HP website (http://h18004.www1.hp.com/products/solutions/power).

Route cables away from fans and air inlets and outlets to ensure proper airflow. Improperly routed cables can impede airflow, cause the cooling fans to work harder, consume more power, and reduce cooling system efficiency.

Blanking panels

If the front of the rack is not filled completely with components, unused equipment mounting space between the components can adversely affect cooling within the rack. Cover unused equipment mounting space with blanking panels.

Seal air gaps in the rack and between adjacent racks to prevent recirculation of hot-air from the rear of the rack to the front of the rack. Use cable brushes to seal cable entry and exit cutouts and cabinet fillers to seal the space between the cabinets to provide improved cooling efficiency.

HP Rack Airflow Optimization Kit

The HP Rack Airflow Optimization Kit helps seal air gaps inside the rack, between two bayed racks, and the clearance between the floor and the rack. The kit also prevents hot exhaust air from the rear of the rack from reaching the front of the rack through pressure differential between the hot and cold aisles. This feature maximizes server cold air intake, which improves datacenter cooling efficiency and reduces datacenter power usage.

The HP Rack Airflow Optimization Kit supports all HP 10000 Series (G1 and G2) rack heights including 22U, 36U, 42U, and 47U. It also supports 800-mm wide HP racks.

Space requirements

When deciding where to place your rack:

- At least 1219 mm (48 in) of clearance is needed all the way around the pallet and above the rack to enable the removal of the packing material.
- At least 1219 mm (48 in) of clearance is needed in front of the rack to enable the door to open completely.
- At least 762 mm (30 in) of clearance is needed in the rear of the rack to provide access to components.
- At least 380 mm (15 in) of clearance is needed around a power supply to facilitate servicing.

For more information, see "Working space for component access".

Delivery space requirements

There should be enough clearance to move equipment safely from the receiving area to the computer room. Permanent obstructions, such as pillars or narrow doorways, can cause equipment damage.

Delivery plans should include the possible removal of walls or doors.

Operational space requirements

Other factors must be considered along with the basic equipment dimensions. Reduced airflow around equipment causes overheating, which can lead to equipment failure. Therefore, the location and orientation of air conditioning ducts, as well as airflow direction, are important. Obstructions to equipment intake or exhaust airflow must be eliminated.

CAUTION: Do not block venting holes in the covers or side panels. Proper airflow is required to prevent overheating of the unit.

The locations of lighting fixtures and utility outlets affect servicing operations. Plan equipment layout to take advantage of lighting and utility outlets. Do not forget to include clearance for opening and closing equipment doors.

Clearance at the front and rear of the racks must also be provided for proper cooling airflow through the equipment.

If other equipment is located so that it exhausts heated air near the cooling air intakes of the racks, larger space requirements are needed to keep ambient air intake to the racks and equipment within the specified temperature and humidity ranges.

Space planning should also include the possible addition of equipment or other changes in space requirements. Equipment layout plans should also include provisions for the following:

- Channels or fixtures used for routing data cables and power cables
- Access to air conditioning ducts, filters, lighting, and electrical power hardware
- Power conditioning equipment
- Cabinets for cleaning materials
- Maintenance area and spare parts

Equipment clearance and floor loading

A clearance of 1219 mm (48 in) in front of a configured rack and 762 mm (30 in) to the rear of a configured rack is recommended. All buildings and raised computer room floors are engineered to provide a specific floor loading.

WARNING: When configuring a solution, make sure that the floor loading specifications are followed. Failure to do so can result in physical injury or damage to the equipment and the facility.

10000 and 10000 G2 Series Rack footprint (600 mm [24 in] wide)

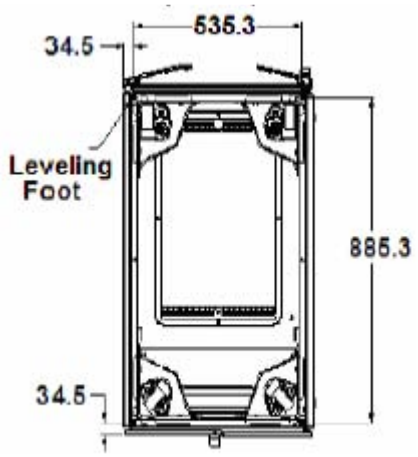

10000 Series Rack footprint (800 mm [31.5 in] wide)

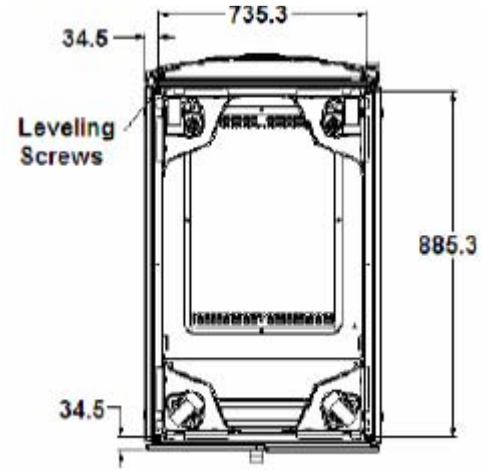

Floor plan grid

A floor plan grid is used to plan the location of equipment in the computer room. In addition to its use for planning, the floor plan grid should also be used when planning the locations of the following items:

- Air conditioning vents
- Lighting fixtures
- Utility outlets
- Doors
- Access areas for power wiring and air conditioning filters
- Equipment cable routing

Environmental specifications

Specification	Value
Temperature range*	
Operating	10°C to 35°C (50°F to 95°F)
Shipping	-40°C to 70°C (-40°F to 158°F)
Maximum wet bulb temperature	28°C (82.4°F)
Relative humidity (noncondensing)**	
Operating	10% to 90%
Nonoperating	5% to 95%

* All temperature ratings shown are for sea level. An altitude derating of 1°C per 300 m (1.8°F per 1,000 ft) to 3,048 m (10,000 ft) is applicable. No direct sunlight allowed.
** Storage maximum humidity of 95% is based on a maximum temperature of 45°C (113°F). Altitude maximum for storage corresponds to a pressure minimum of 70 kPa.

Rack and accessory footprints

When accessories such as extensions and stabilizing kits are added to a particular rack, the footprint of the rack extends into the rack rear row and infringes upon necessary clearances.

Footprint for a 600 mm rack configuration with an extension kit installed (598 mm wide x 1184.9 mm deep):

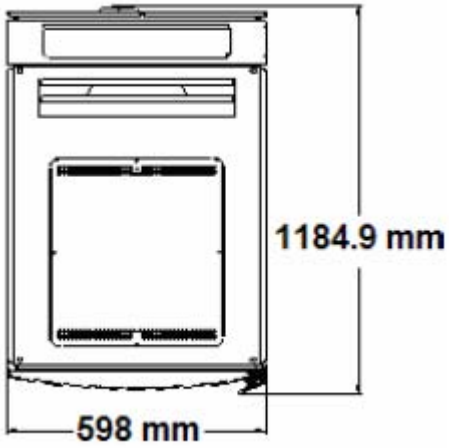

Footprint for a 600 mm rack configuration with an extension and standard stabilizer kit installed (1001.5 mm wide x 1390.0 mm deep):

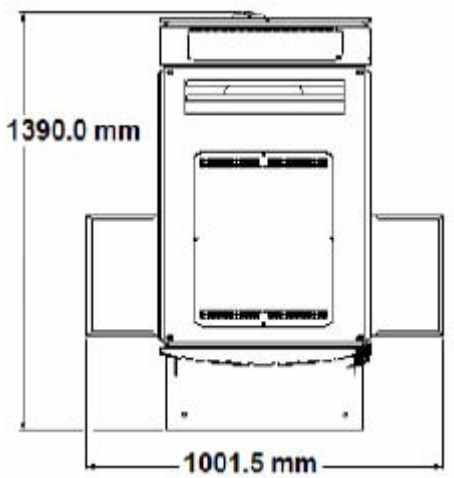

Footprint for a 600 mm rack configuration with an extension and heavy duty stabilizer kit installed (1001.5 mm wide x 1414.7 mm deep):

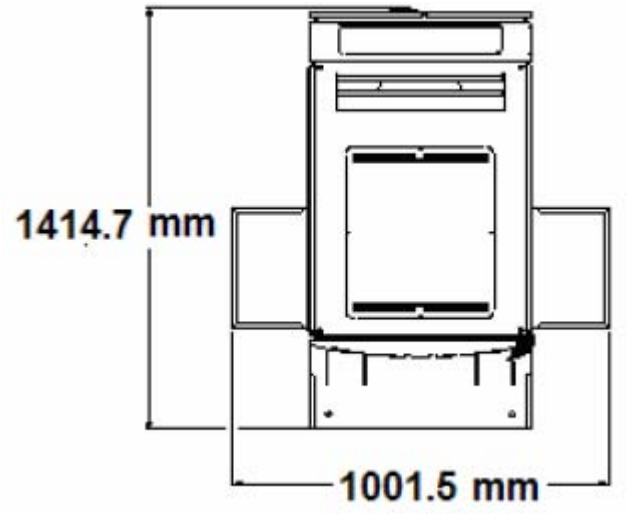

Front door clearance

When racks are bayed together, the design of the front door limits the extent to which the rack door on the right can open. If there is not sufficient work space, open the door on the left side or remove the door from the rack being serviced. Slight differences exist between the opening allowances of the 10000 and 10000 G2 Series Racks because of the different geometries and construction of the doors.

Front door clearance for 10000 Series Racks configured with 600 mm baying brackets is:

- 90° access with one door closed

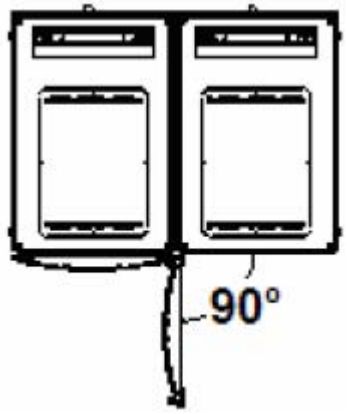

- 120° access with both doors open

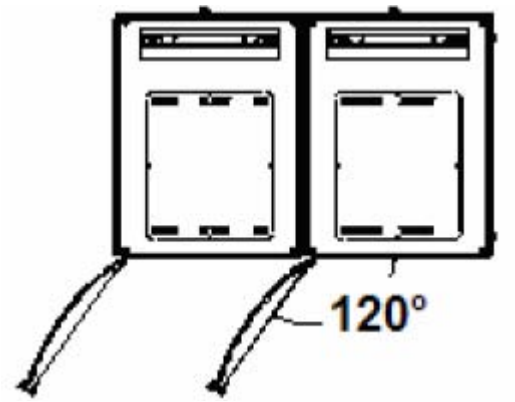

Front door clearance for 10000 Series Racks configured with 24-in baying brackets is:

- 102° access with one door closed

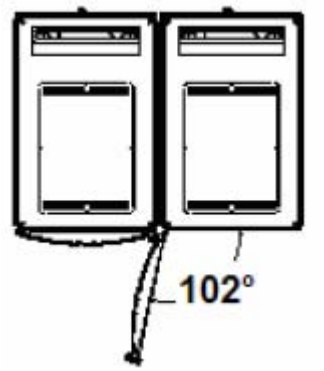

- 120° access with both doors open

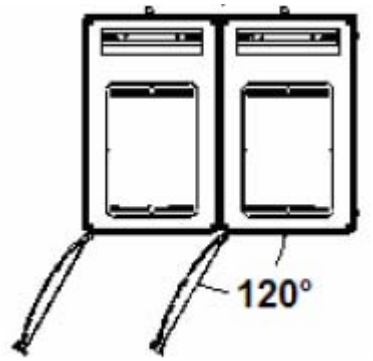

Front door clearance for 10000 G2 Series Racks configured with 600 mm baying brackets is:

- 95° access with one door closed

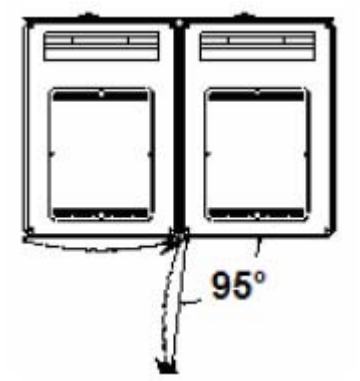

- 118° access with both doors open

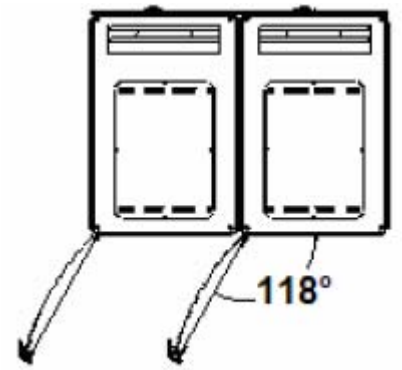

Front door clearance for 10000 G2 Series Racks configured with 24 in baying brackets is:

- 108° access with one door closed

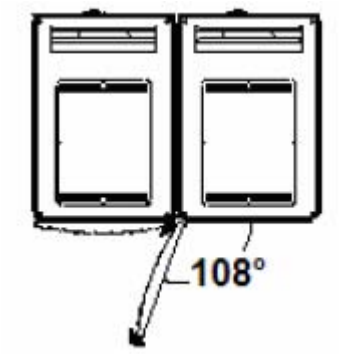

- 118° access with both doors open

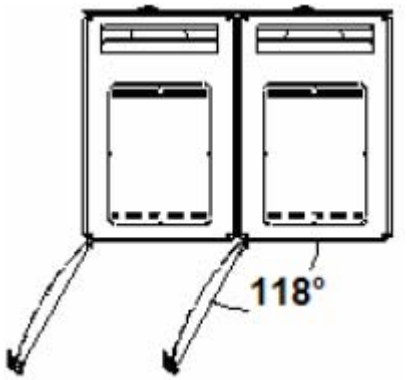

Best practices for deployment in rows

Baying kits are used to physically connect adjacent racks to create a row of two or more units. Racks that are bayed together with a baying kit are more stable and reduce the potential tipping of the rack. If racks are secured together with baying kits, the side feet installed on each end of the row of racks are considered optional.

If gaps are created between racks that could allow airflow from the rear of the rack, these gaps should be sealed with an appropriate material that will not cause particulate or electro-static discharge issues.

Fixed stabilizers are anti-tip side feet (front and side) that provide stability and support when equipment is installed, removed, or accessed within the rack. Rack rows with four or more bayed racks do not need a stabilizer kit installed. For single racks or bays of three racks, with no component exceeding 100 kg (220 lb), a standard 600 mm stabilizer is required.

If a standard 600 mm (23.62 in) or 800 mm (31.50 in) front stabilizing foot is installed on a stand-alone rack, the side feet, provided with the fixed stabilizer kit, should also be installed.

A heavy duty 600 mm (23.62 in) front stabilizer foot is required in any of the following situations:

- A single rack-mountable component weighing 100 kg (220 lb) or greater is installed in a stand-alone rack.
- A row of three or fewer racks are bayed together.
- Side feet, which are included in the stabilizer kits, should also be installed to stabilize the rack.

Rack placement and arrangement for proper airflow

Racks must be placed and arranged properly in the data center to provide sufficient airflow and clearance for access to the rack.

In the front of the rack, a clearance of 1219 mm (48 in) is required. This requirement applies to individual rack installations as well as when aligning rack rows so that the front doors are facing each other.

In the rear of the rack, a clearance of 762 mm (30 in) is required to provide space for servicing the rack.

If a data center has multiple rows of racks, the rows of racks can be arranged to take advantage of the front-to-back airflow by arranging racks front-to-front and back-to-back. Additionally, conditioned air registers can be oriented along the front aisles and the return air registers in the back aisles. This arrangement utilizes the aisle space as air plenums and increases the efficiency of the air conditioning.

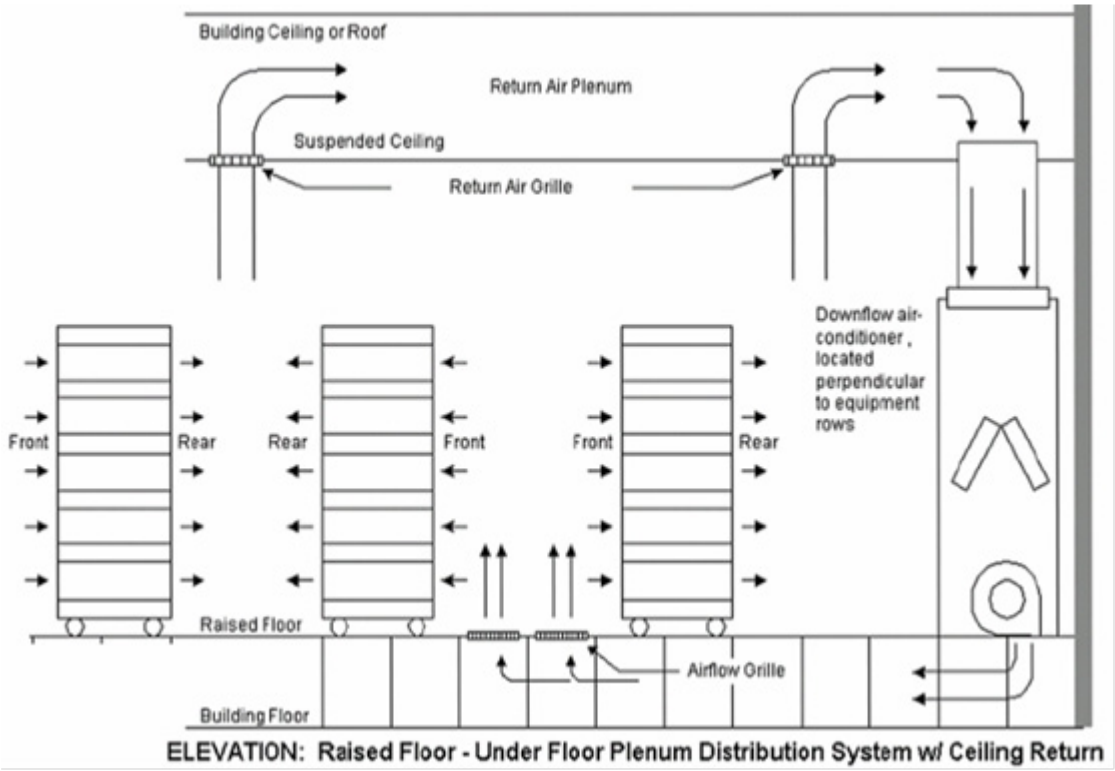

△ **CAUTION:** Always use blanking panels to fill empty vertical spaces in the rack. This arrangement ensures proper airflow. Using a rack without blanking panels results in improper cooling that can lead to thermal damage.

Third-party racks

If a third-party rack is used, observe the following additional requirements to ensure adequate airflow and to prevent damage to the equipment:

- Front and rear doors: If the rack includes closing front and rear doors, a minimum of 65 percent open area must be provided to ensure adequate airflow.
- Front door: The clearance from face of rack to inside of the front door must be a minimum of 77 mm (3 in).

- Rear door: The clearance between the rear of the enclosure and the rear rack door must be a minimum of 175 mm (6.9 in) to accommodate system cabling.
- Side: The clearance between the installed rack component and the side panels of the rack must be a minimum of 70 mm (2.75 in).
- Width: 483 mm (19 in)
- Depth: Maximum clearance between front and rear RETMA rails is 864 mm (34 in). Minimum clearance for round-hole racks is 627 mm (24.7 in). Minimum clearance for square-hole racks is 635 mm (25 in).
- The rack must be able to accept the adjustable rack rails that are shipped with each enclosure:
  - Minimum rail length: 635 mm (25 in)
  - Maximum rail length: 864 mm (34 in)

Rack tie-down option kit

The HP 10000 G2 Series Rack Tie-Down Option Kit enables you to secure HP 10000 G2 Series Racks to the floor.

The following table indicates where the holes are to be drilled to secure the rack to the floor. The distances are measured from the holes on the tie-downs. To drill your holes, contact your building structural engineer. After your holes have been drilled, insert a bolt with a washer into each hole, securing the rack to the floor.

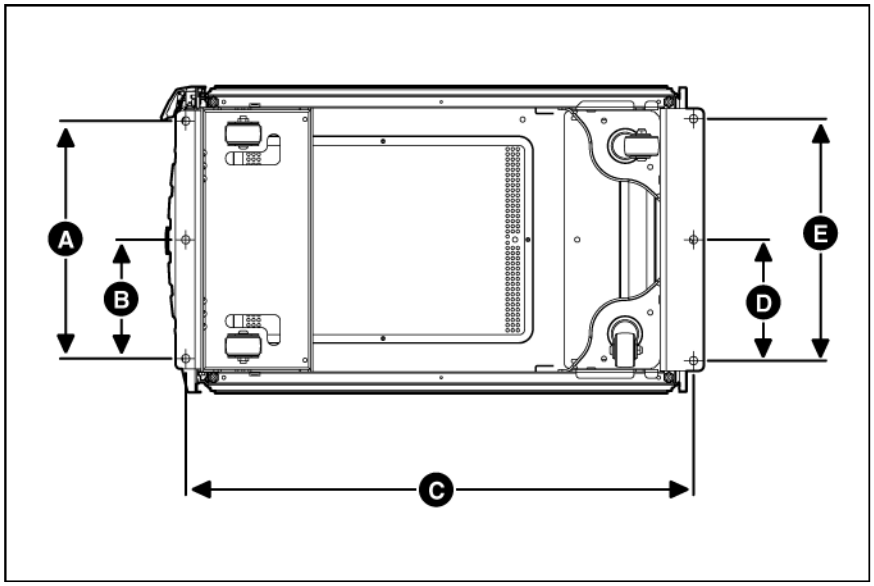

Callout	600W distance
A	470 mm (18.0 in)
B	235 mm (9.3 in)
C	987.1 mm (38.9 in)
D	231 mm (9.1 in)
E	462 mm (18.2 in)

For more information, see the *HP 10000 G2 Series Rack Tie-Down Option Kit Installation Instructions*.

Power requirements and considerations

Power requirements

When planning power distribution requirements, observe the following:

- The power load must be balanced between available AC supply branch circuits.
- The AC current load attached to a branch circuit must not exceed 80 percent of that branch circuit current rating.
- If a UPS system is used, when the peak load reaches 90 percent of the non-redundant UPS system capacity, no new loads can be installed until the UPS system capacity is increased.

Installation of this equipment must be performed by licensed electricians and must comply with local and regional electrical regulations governing the installation of IT equipment. This equipment is designed to operate in installations covered by NFPA-70 (National Electric Code) and NFPA-75 (code for Protection of Electronic Computer/Data Processing Equipment). For electrical power ratings on options, refer to the product rating label or the user documentation supplied with that option

WARNING: To reduce the risk of personal injury, fire, or damage to the equipment, do not overload the AC supply branch circuit that provides power to the rack. Consult the electrical authority having jurisdiction over wiring and installation requirements of your facility.

CAUTION: Protect the chassis from power fluctuations and temporary interruptions with a regulating UPS. This device protects the hardware from damage caused by power surges and voltage spikes and keeps the chassis in operation during a power failure.

Electrical factors

Proper design and installation of a server power distribution system requires specialized skills. Those responsible for this task must have a thorough knowledge of appropriate electrical codes and the limitations of the power systems for computer and data processing equipment.

A well designed power distribution system exceeds the requirements of most electrical codes. A good design, when coupled with proper installation practices, produces the most trouble-free operation.

A detailed discussion of power distribution system design and installation is beyond the scope of this document. However, electrical factors relating to power distribution system design and installation must be considered during the site preparation process.

IMPORTANT: Electrical practices and suggestions in this guide are based on North America practices. For regions and areas outside North America, local electrical codes take precedence over North American electrical codes.
Local authority has jurisdiction (LAHJ) and should make the final decision regarding adherence to region-specific or area-specific electrical codes and guidelines.

Power consumption

Power consumption can be divided into two broad categories:

- Marked electrical amperage, which is listed on the required safety and regulatory labels, generally represents the maximum current draw that the marked device could achieve. Safety and regulatory labels on computer equipment list the ratings for maximum power consumption conditions.
- Typical consumption, which is measured under normal circumstances, should be used only in customer calculations with UPS and air conditioning sizing where remaining capacities are needed.

When determining the necessary electrical infrastructure required, consider several factors. The first and most important area is the local electrical and regulatory codes. The installation must meet or exceed these codes. The local authority has jurisdiction and makes the final decision as to whether an installation conforms to the relevant codes.

In North America, the relevant code is *National Electrical Code 2005 Article 210 and Article 645*, which states the continuous measured load must not exceed 80 percent of the rated circuit maximum, where continuous load is defined as 3 hours or more.

This method leaves some flexibility to the infrastructure designer and includes several options for determining power requirements, which are discussed in the following bullets.

NOTE: The following scenarios use North America circuit sizes and voltages.

- Use HP power sizing tools to calculate the infrastructure required as configured and allow some flexibility for growth. HP provides power sizing tools for all its current industry standard servers at the HP Enterprise Configurator website (http://h30099.www3.hp.com/configurator/).

  This tool provides a conservative estimate of power loading values at a given system utilization as well as a theoretical maximum load that the system could achieve as configured. Use of these tools allows the infrastructure designer to use realistic maximum values to estimate power loading and circuit requirements. In this scenario, however, monitoring tools such as Insight Power Manager or HP Monitored PDUs must be used to ensure that the continuous loads do not exceed 80 percent of the rated circuit load.
- Install devices in a test environment and measure the actual worst case loads running the applications and loading that is specific to your environment, and then size the electrical infrastructure accordingly. This method is the most accurate, but it might not be practical for many customers. This method also requires ongoing monitoring of the installation to ensure that infrastructure is not overloaded as applications and loads change.
- Manage the electrical load using the HP ProLiant SL Advanced Power Manager. For information about SL APM, see the *HP ProLiant SL Advanced Power Manager User Guide* on the HP website *(*http://h20000.www2.hp.com/bc/docs/support/SupportManual/c02018322/c02018322.pdf?jumpid=reg_R1002_USEN*)*.
- Size air conditioning and UPS devices with typical ratings, but account for overloading that might take place with additional infrastructure growth.

HP recommends a cooling plan for the maximum rated power output of the room and a growth plan for cooling the infrastructure.

When determining power requirements, always consider any peripheral equipment that will be installed during initial installation or as a future upgrade. To determine the power required to support these devices,

see the applicable documentation for such devices. HP recommends using dedicated breakers for peripheral equipment.

Electrical load requirements (circuit breaker sizing)

IMPORTANT: LAHJ is the final authority regarding adherence to country-specific electrical codes and guidelines.

HP recommends derating the power distribution systems for one or both of the following reasons:

- To avoid nuisance tripping from load shifts or power transients, do not run circuit protection devices continuously above 80 percent of their RMS current ratings.
- Safety agencies derate most power connectors to 80 percent of their RMS current ratings.

Power quality

Most HP products are designed to operate over a wide range of voltages and frequencies. The products are tested and shown to comply with certain EMC Specifications. However, damage can occur if these ranges are exceeded. Severe electrical disturbances can exceed the design specifications of the equipment.

Factors affecting power quality

Common factors that affect power quality include the following:

- Electrical storms
- Utility service brownouts or sags
- Faults in the power generation equipment
- Large inductive loads, such as motors and welders
- Load fluctuations occurring within the facility distribution system
- Loose connections or other faults in the distribution system wiring

Power system protection

HP products can be protected from the sources of many of these electrical disturbances by using the following:

- A dedicated power distribution system
- Power conditioning equipment
- Over- and under-voltage protection and detection circuits
- Lightning arresters on power cables to protect equipment against electrical storms

The power distribution system is designed to provide immunity to power interruptions. However, testing cannot conclusively rule out loss of service. Use the following guidelines to provide the best possible performance of power distribution systems for HP computer equipment:

- Dedicated power source—Isolates the power distribution system from other circuits in the facility.
- Online uninterruptible power supply (UPS)—Keeps input voltage to devices constant and should be considered if outages of one-half cycle or more are common.

- Auto-start generators–provide backup power to the UPS.
- Missing-phase and low-voltage detectors—initiate a transfer of the UPS to generator power when a severe power interruption occurs. For peripheral equipment, these devices are recommended but optional.

For each situation, refer to qualified contractors or consultants.

Power considerations

Power is best managed within the rack by the use of one or more rack-mounted PDUs. Depending on the configuration, you might have to use multiple PDUs to connect all devices inside the rack.

The total power load for a PDU must not exceed 80% of the branch circuit rating. If you do not use a PDU, connect each piece of equipment within the rack to a dedicated branch circuit.

For additional information, see the HP website (http://www.hp.com/go/hppoweradvisor).

Power redundancy

The HP ProLiant SL2500 system does not provide power redundancy. Both power supplies must be installed at all times.

High-availability information technology equipment such as servers and storage devices can be configured with backup or redundant power sources and power supplies in either of the following configurations:

- N+N design: N power supplies can be provided where N/2 power supplies are capable of sustaining the associated equipment's power demand. For the HP ProLiant chassis this quantity is typically a 2+2 power supply configuration.
- N+1 design: Typically four power supplies are provided, requiring at least three to handle the equipment's power demand. If one fails, the other three remain on line with enough capacity to meet the power demand.

Be sure that the wiring and branch circuitry to each installation is suitably rated for the power demand of the connected equipment. To provide additional redundancy, HP recommends routing the power through separate branch circuits, breaker panels, and PDUs.

Non-redundant power

For equipment supplied by a single source of power, connect all components to the same power distribution device (PDU or UPS). The power distribution device should be suitably rated for the connected load. If the total load exceeds the rating of the power distribution device, obtain a suitable rated device or add a second power distribution device and divide the load equally between the devices.

Line voltage selection

All HP products that are optimized for rack mounting have wide-range power supply inputs designed to operate at a voltage range of 100-240V. HP recommends operating rack-optimized equipment with high line voltage (200 V AC to 240V AC).

Benefits of high line voltage operation include the following:

- Power supplies run more efficiently and waste less power when operating at 200V to 240 V, thus saving electrical power.

- Greater capacity is available in a single rack. For the same size circuit, almost twice the power can be delivered to a rack at high line versus low line. For example, a branch circuit that is 115 V 30A can deliver 2760 VA (derated) to a rack, while a branch circuit that is 208 V 30A can deliver 4992VA (de-rated) to a rack.
- Some products require 200 V to 240 V input power to operate at their full-rated capacity.
- The HP 1200W High Efficiency Power Supply operates only at 200 V AC to 240V AC and provides significantly higher efficiency than the 750 W power supply.
- Power supplies run cooler at higher input voltages, last longer, and improve overall availability. Also, because they run cooler, they produce less heat which helps to lower cooling costs.
- Keeping input currents lower allows the use of smaller, more standardized power connections.

Distribution hardware

This section describes wire selection and the types of raceways (electrical conduits) used in the distribution system.

Wire selection

Use copper conductors instead of aluminum, because aluminum's coefficient of expansion differs significantly from that of other metals used in power hardware. Because of this difference, aluminum conductors can cause connector hardware to work loose, overheat, and fail.

Raceway systems (electrical conduits) (LAHJ)

Raceways (electrical conduits) form part of the protective ground path for personnel and equipment. Raceways protect the wiring from accidental damage and also provide a heatsink for the wires.

Any of the following types may be used:

- EMT thin-wall tubing
- Rigid (metal) conduit
- Liquidtight with RFI shield grounded (most commonly used under raised floors)
- Armored cable

Building distribution

All building feeders and branch circuitry should be in rigid metallic conduit with proper connectors (to provide ground continuity). Conduit that is exposed and subject to damage should be constructed of rigid galvanized steel.

Grounding requirements

This equipment must be grounded properly for proper operation and safety. In the United States, you must install the equipment in accordance with NFPA 70 (National Electric Code), Article 250, as well as any local and regional building codes.

In Canada, you must install the equipment in accordance with Canadian Standards Association, CSA C22.1, Canadian Electrical Code.

In all other countries, you must install the equipment in accordance with any regional or national electrical wiring codes, such as the International Electrotechnical Commission (IEC) Code 364, parts 1 through 7. Furthermore, you must be sure that all power distribution devices used in the installation, such as branch wiring and receptacles, are listed or certified grounding-type devices.

Because of the high ground-leakage currents associated with this equipment, HP recommends the use of a PDU that is either permanently wired to the building's branch circuit or includes a nondetachable cord that is wired to an industrial-style plug. NEMA locking-style plugs or those complying with IEC 60309 are considered suitable for this purpose. Using common power outlet strips to supply power to this equipment is not recommended.

Grounding systems

HP systems are tested and certified only with grounding systems in which a neutral return path and a protective earth are separate conductors without any inserted impedances. Additionally, the protective earth and return neutral wires are shorted together at the XO bonding junction on the secondary side of the newly derived power source.

Grounding and earth leakage current

For proper operation and safety, rack components must be properly grounded in accordance with any local and regional building codes. Furthermore, be sure that all power distribution devices used in the installation, such as branch wiring and receptacles, are Listed or Certified grounding-type devices.

Observe the following limits when connecting products to AC power distribution devices:

- For UPS products and PDUs that have permanently attached AC power cords or are directly wired to the building power, the total combined leakage current should not exceed 5 percent of the total input current required for the connected products.
- For UPS products and PDUs that have detachable AC power cords, the total combined leakage current should not exceed 3.5 mA per PDU or UPS.

Power distribution safety grounding (LAHJ)

The power distribution safety grounding system consists of connecting various points in the power distribution system to earth ground using green (green/yellow) wire ground conductors. When tied to metal chassis parts that might be touched, these ground connections protect computer room personnel against shock hazard from current leakage and fault conditions.

Power distribution systems consist of several parts. HP recommends that these parts be solidly interconnected to provide an equipotential ground to all points.

Main building electrical ground

The main electrical service entrance equipment should have an earth ground connection, as required by applicable codes. Connections such as a grounding rod, building steel, or a conductive type cold water service pipe provide an earth ground.

Conduit bonding

Construct all electrical distribution systems of metallic conduit that is connected together securely or bonded to panels and electrical boxes to provide a continuous grounding system.

Power panel ground

Each power panel should be grounded to the electrical service entrance with green (green/yellow) wire ground conductors. The green (green/yellow) wire ground conductors should be sized per applicable codes (based on circuit overcurrent device ratings).

NOTE: The green wire ground conductor can be a black wire with green tape (LAHJ).

Computer safety ground

Ground all computer equipment with the green (green/yellow) wire included in the branch circuitry. The green (green/yellow) wire ground conductors should be connected to the appropriate power panel and should be sized per applicable codes (based on circuit overcurrent device ratings).

Dual power source grounding

With dual power sources, both sources must have the same ground reference. Otherwise, an electrical potential could exist that could be hazardous to personnel and might cause performance issues for the equipment.

Because the dual power sources often originate from two different transformers or two different UPS devices, use the same ground reference point to ground the secondary of each transformer or UPS device. Measure the voltage potentials from ground pin to ground pin of these sources. Voltage levels that are measured above 3.0 V might be hazardous to personnel or cause equipment performance issues and must be corrected before placing the equipment in service.

Cabinet performance grounding (high frequency ground)

Some safety power distribution wires are too long and too inductive to provide adequate high-frequency return paths. Signal interconnects between system cabinets might need high-frequency ground return paths *in addition to* the safety or power distribution system 50-60Hz grounding system. HP recommends the use of a properly installed SRG, also bonded to the 50-60Hz grounding system.

⚠ **WARNING:** Do not use a cabinet-to-floor ground strap in place of a properly installed safety (50-60Hz) grounding system, nor in place of a properly installed SRG. An improperly installed grounding system can present a shock hazard to personnel.

Power panels located in close proximity to the computer equipment should also be connected to the site grounding grid.

Raised floor "high-frequency noise" grounding

IMPORTANT: Regardless of the grounding connection method used, the raised floor should be grounded as an absolute safety minimum.

If a raised floor system is used, the floor must be designed as a signal ground grid that maintains an equal potential over a broad band of frequencies. To accomplish this, observe the following guidelines:

- Use a raised floor system where the stringers are bolted to the pedestals.
- Select floor components that have a corrosion-resistant plating to provide low resistance connection points to other components and to computer cabinets.

- Connect a 2/0 copper conductor to every other pedestal around the perimeter and to the equipment grounding system of the building.
- Bond all metal pipes that enter or leave the raised floor area to the 2/0 perimeter ground.
- Bond each row and column of the floor grid to the 2/0 perimeter ground.
- Bond any I-beams that penetrate the raised floor to the pedestals.
- Connect the opposite corners of equipment cabinets to the pedestals with #12 stranded wire.
- Where the cabinets are bolted together in rows, bonding two corners at opposite ends of the row is sufficient.
- Bonding straps should be 70 cm (24 in) or less in length.

If a bolted-stringer raised floor system is not used, the alternate methods that may provide acceptable results include the following:

- Use a grounded #6 AWG minimum copper wire grid that is clamped mechanically to floor pedestals and bonded properly to the building or site ground.
- Add a grounding grid made of copper strips mounted to the subfloor. The strips should be 0.8 mm (0.032 in) thick and a minimum of 76 mm (3.0 in) wide. Connect each pedestal to four strips using 6-mm (0.25-in) bolts tightened to the manufacturer's torque recommendation.

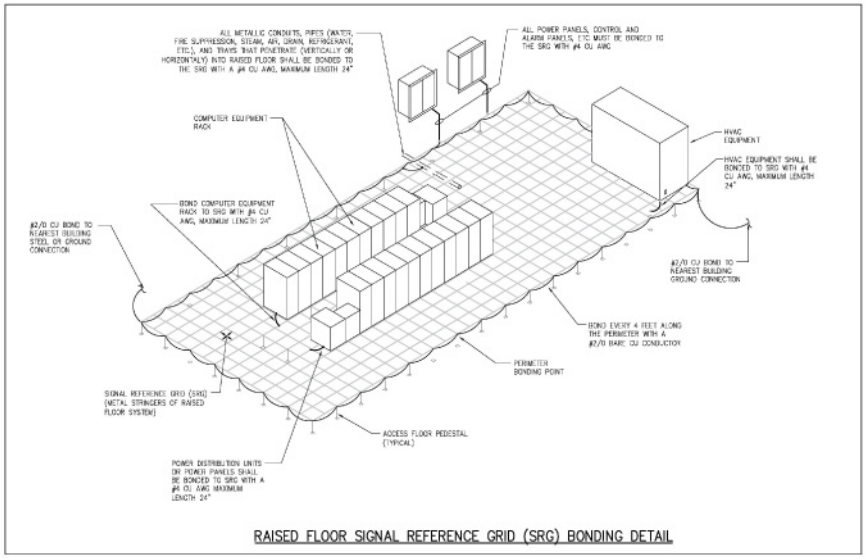

RAISED FLOOR SIGNAL REFERENCE GRID (SRG) BONDING DETAIL

Equipment grounding implementation details

Connect all HP equipment cabinets to the site ground grid as follows:

1. Attach one end of each ground strap to the applicable cabinet ground lug.
2. Attach the other end to the nearest pedestal base (raised floor) or cable trough ground point (nonraised floor).
3. Check that the braid contact on each end of the ground strap consists of a terminal and connection hardware (a 6-mm [0.25-in] bolt, nuts, and washers).
4. Check that the braid contact connection points are free of paint or other insulating material and treated with a contact enhancement compound (similar to Burndy Penetrox).

System installation guidelines

In domestic installations, install the proper receptacles before the HP equipment arrives. For installation procedures, see the appropriate installation guide.

Wiring connections

Expansion and contraction rates vary among different metals. Therefore, the integrity of an electrical connection depends on the restraining force applied. Connections that are too tight can compress or deform the hardware and cause it to weaken. This deformation usually leads to high impedance, preventing circuit breakers from tripping when needed or contributing to a buildup of high frequency noise.

> △ **CAUTION:** Connections that are too loose or too tight can have a high impedance that causes serious problems, such as erratic equipment operation. A high impedance connection overheats and sometimes causes fire or high temperatures that can destroy hard-to-replace components such as distribution panels or system bus bars.

Wiring connections must be properly torqued. Many equipment manufacturers specify the proper connection torque values for their hardware.

Ground connections must only be made on a conductive, nonpainted surface. When equipment vibration is present, lock washers must be used on all connections to prevent connection hardware from working loose.

Data communications cables

Power transformers create high-energy fields in the form of EMI. Heavy foot traffic can create ESD that can damage electronic components. Route data communications cables away from these areas. To reduce the effects of external fields, use shielded data communications cables that meet approved industry standards.

Power configuration

The HP ProLiant chassis can be powered from single-phase AC power sources. Power supply options are available at the time of purchase through either the Build-to-Order or Configure-to-Order processes.

Existing units can be converted from one power source to another when necessary. For more information on converting an enclosure power source, see the HP website (http://h18004.www1.hp.com/products/solutions/power).

SL Rack/Chassis Dynamic Power Capping

The SL Rack/Chassis Dynamic Power Capping feature limits the power consumption at the rack level through HP ProLiant SL Advanced Power Manager.

For details on SL APM and SL Rack/Chassis Rack Dynamic Power Capping, see the HP website (http://h18004.www1.hp.com/products/quickspecs/14189_na/14189_na.html).

Single-phase AC configuration

The HP ProLiant SL6500 server has four power supplies, eight fans, and a single SLAPM interface located on the rear panel of the chassis.

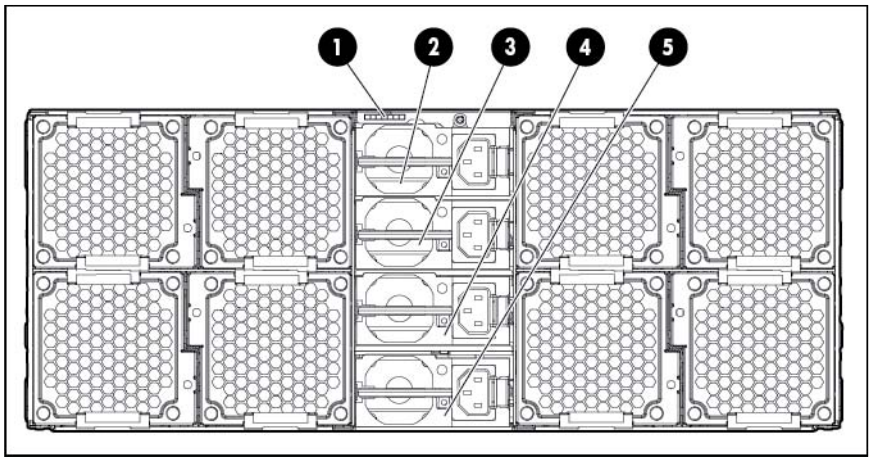

Item	Description
1	SLAPM interface
2	Power supply 4
3	Power supply 3
4	Power supply 2
5	Power supply 1

The HP ProLiant SL2500 server has two power supplies and an RCM module on the rear panel of the chassis.

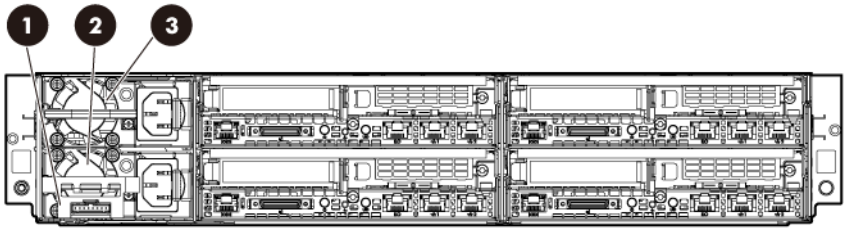

Item	Description
1	RCM module
2	Power supply 1
3	Power supply 2

To cable the chassis by using a single-phase AC configuration:

1. Connect the AC power cables to the power supply connections on the rear of the chassis.
2. Connect the AC power cables to the AC power source or to an installed PDU.

Power supply specifications

For the latest power supply specifications, see the HP website (http://h18004.www1.hp.com/products/quickspecs/14188_na/14188_na.pdf).

Hardware specifications and requirements

Chassis specifications

For the HP ProLiant chassis specifications, see the HP website (http://h18004.www1.hp.com/products/quickspecs/productbulletin.html).

HP 10000 G2 rack specifications

For a current list of all rack specifications, see the Best Practices document on the HP website (http://www.hp.com/support/HP10000G2SeriesRack_Manuals).

Rack	Height	Width	Depth	Dynamic load (gross)	Static load
HP 10622 G2	22U	600 mm (23.8 in)	1000 mm (39.4 in)	544.3 kg (1200 lb)	544.3 kg (1200 lb)
HP 10636 G2	36U	600 mm (23.8 in)	1000 mm (39.4 in)	689.5 kg (1520 lb)	907.2 kg (2000 lb)
HP 10642 G2	42U	600 mm (23.8 in)	1000 mm (39.4 in)	907.2 kg (2000 lb)	907.2 kg (2000 lb)
HP 10647 G2	47U	600 mm (23.8 in)	1000 mm (39.4 in)	Not applicable	907.2 kg (2000 lb)
HP 10842 G2	42U	800 mm (31.5 in)	1000 mm (39.4 in)	453.6 kg (1000 lb)	907.2 kg (2000 lb)
HP Modular Cooling System G2	42U	1998.9 mm (78.7 in)	609.6 mm (35.8 in)	908 kg (2000 lb)	908 kg (2000 lb)
HP Modular Cooling System G3	42U	1998.9 mm (78.7 in)	609.6 mm (35.8 in)	908 kg (2000 lb)	908 kg (2000 lb)

Rack requirements

The chassis is compatible with the following racks:

- All HP 10000 and 10000G2 Series racks except the HP 10614 rack.

  NOTE: The system is optimized for 10000 Series racks.

- Telco racks

If a third-party rack is used, observe the following additional requirements to ensure adequate airflow and to prevent damage to the equipment:

- Front and rear doors: If the rack includes closing front and rear doors, a minimum of 65 percent open area must be provided to ensure adequate airflow.

- Front door: The clearance from face of rack to inside of the front door must be a minimum of 77 mm (3 in).
- Rear door: The clearance between the rear of the enclosure and the rear rack door must be a minimum of 175 mm (6.9 in) to accommodate system cabling.
- Side: The clearance between the installed rack component and the side panels of the rack must be a minimum of 70 mm (2.75 in).
- Width: 483 mm (19 in)
- Depth: Maximum clearance between front and rear RETMA rails is 864 mm (34 in). Minimum clearance for round-hole racks is 627 mm (24.7 in). Minimum clearance for square-hole racks is 635 mm (25 in).
- The rack must be able to accept the adjustable rack rails that are shipped with each enclosure:
  - Minimum rail length: 635 mm (25 in)
  - Maximum rail length: 864 mm (34 in)

Rack-free environment requirements

The HP ProLiant chassis (referred to as the chassis) can be used in a rack-free environment. The following conditions must be met when performing a rack-free installation:

- A fully-populated chassis can weigh up to 113.4 kg (250 lb). The object supporting the chassis must be able to withstand this weight.
- The chassis should be supported by a sturdy, flat surface.

⚠ **WARNING:** To reduce the risk of personal injury or damage to the equipment in a rack-free environment:

- Never stack the chassis on top of another chassis.
- Never place equipment on top of the chassis.
- Never place the chassis on a surface that cannot support up to 113.4 kg (250 lb).

Configuration scenarios

Example configurations

Configuration examples can be calculated using the HP Power Advisor Tool (http://www.hp.com/go/hppoweradvisor). This tool is designed for facilities planning purposes only. Values obtained from the tool are based on worst case loads. Whenever possible, HP recommends using actual measurements in configuration planning. Measurements must be made with the intended configuration, application loading, and ambient environment.

Actual power usage will vary, depending on application loading, ambient temperature, and other factors.

Estimating power and cooling

Power consumed by a HP ProLiant SL Server is converted to heat, which is expressed in Btu/h. You can calculate the heat load for a system by using the following equation: Heat Load = Power (W) x 3.413 Btu/h.

In the preceding equation, 1 W equals 3.413 Btu/h. The installation of a HP ProLiant SL Server solution into a computer room containing existing systems might have a significant impact on cooling requirements. HP Data Center Services provides consultation to assist you in developing an efficient high-density cooling strategy by using dynamic modeling.

For more information, contact your HP sales representative.

A complete discussion of cooling requirements is beyond the scope of this guide. For more information, see the following sources:

- Technology Brief TC050901TB *Optimizing facility operation in high density data center environments, 2nd edition* available on the HP website (http://h20000.www2.hp.com/bc/docs/support/SupportManual/c00064724/c00064724.pdf).
- *Best practices for HP 10000 Series and HP 10000 G2 Series Racks*, available on the HP website (http://h20000.www2.hp.com/bc/docs/support/SupportManual/c00883424/c00883424.pdf).

The budget allowed for modern servers should include at least 4 kW of actual power use per enclosure at maximum configuration. Using modern day kW/cabinet to W/sf conversion ratios this equates to approximately 90 W/sf for each single chassis.

Placing just three chassis into a rack equates to a power density of at least 250 W/sf. When planning upgrades to older data centers to add servers, plan to upgrade the electrical and mechanical infrastructure to properly support the added electrical and cooling requirements. New data center planning for HP ProLiant SL Servers must specify a minimum of 250 W/sf or 12 kW/cabinet power densities.

To estimate computer-room cooling requirements, first calculate the amount of energy used by the solution. HP provides online power-consumption calculators that enable you to configure a virtual rack and determine its power consumption. For more information, see the HP website (http://h18004.www1.hp.com/products/solutions/power).

For other models, obtain the power consumption data from the component specifications.

The QuickSpecs contains the specifications for all HP products. Use a worksheet similar to the following to calculate power consumption and heat load.

Component	Quantity	Watts	Btus	Total
HP ProLiant chassis (configured)				
Other rack options				
Option A				
Option B				
Total power				

Estimating total weight

You might need to determine the total weight of custom configurations if any of the following considerations apply:

- Variations in flooring support when moving the solution during installation
- Trucking equipment limits
- Raised floor installation (calculating load limits and reinforcement)
- Secondary or tertiary floor installation

Determine the weight and floor load requirements for the purpose of site planning:

- Capacity planning: Assume that the rack will eventually be laden to its 907.18 kg (2,000 lb) capacity.
- To obtain an approximation for planning, you can use the worksheet supplied in the following table for each rack in the configuration.

You must add the weight of any components that are not included in the list of rack options, for example additional hard drives in the server. To obtain the weight of any individual component, see the QuickSpecs on the HP website.

Component	Quantity	Weight (kg)	Weight (lb)	Total
Rack				
HP ProLiant chassis weight including all components				
Other rack options and requirements				
Option A				
Option B				
Option C				
Total weight				

Preparing for installation

Warnings and cautions

WARNING: To reduce the risk of personal injury or damage to equipment, heed all warnings and cautions throughout the installation instructions.

WARNING: To reduce the risk of personal injury or damage to the equipment, be sure that:

- The rack is bolted to the floor using the concrete anchor kit.
- The leveling feet extend to the floor.
- The full weight of the rack rests on the leveling feet.
- The racks are coupled together in multiple rack installations.
- Only one component is extended at a time. If more than one component is extended, a rack might become unstable.

WARNING: The chassis is very heavy. To reduce the risk of personal injury or damage to the equipment:

- Observe local occupational health and safety requirements and guidelines for manual material handling.
- Remove all installed components from the chassis before installing or moving the chassis.
- Use caution and get help to lift and stabilize the chassis during installation or removal, especially when the chassis is not fastened to the rack.

WARNING: To reduce the risk of personal injury or damage to the equipment, you must adequately support the chassis during installation and removal.

WARNING: Always use at least two people to lift the chassis into the rack. If the chassis is being loaded into the rack above chest level, a third person must assist with aligning the chassis with the rails while the other two people support the weight of the chassis.

WARNING: Be sure to install chassis starting from the bottom of the rack and work your way up the rack.

WARNING: To reduce the risk of personal injury from hot surfaces, allow the drives and the internal system components to cool before touching them.

WARNING: To reduce the risk of electric shock or damage to the equipment:

- Never reach inside the chassis while the system is powered up.
- Perform service on system components only as instructed in the user documentation.

CAUTION: Always be sure that equipment is properly grounded and that you follow proper grounding procedures before beginning any installation procedure. Improper grounding can result in ESD damage to electronic components. For more information, refer to "Electrostatic discharge ("Electrostatic discharge prevention" on page 9)."

△ **CAUTION:** When performing non-hot-plug operations, you must power down the chassis and/or the system. However, it may be necessary to leave the chassis powered up when performing other operations, such as hot-plug installations or troubleshooting.

Additional rack considerations

Consider the following additional specifications and components, with regard to your specific rack configuration:

- Power—If a UPS is installed, do not exceed its output rating. Be sure to review the installation instructions provided with each component for important cautions and warnings.
- PDUs—Install PDUs before installing other components.
- Height—The height of the rack and of rack-mountable components is measured in U increments, where U = 4.5 cm (1.75 in). When you are configuring your rack installation, remember that the total U measurement of the components you want to install cannot exceed the stated U height of the rack.
- Keyboard—The rack keyboard requires installation of a 1U keyboard drawer rack option kit.
- Monitor—The monitor requires installation of a monitor/utility shelf rack option kit unless you are using a rack-mountable flat-panel monitor.
- Server console switch—If a console switch is configured, use the CPU-to-console switch cable included with the server. The standard distance between the console switch and the keyboard, monitor, and mouse can vary by 3-, 7-, 12-, 20-, and 40-ft lengths.

  NOTE: National electrical regulations governing the installation of building wiring require that an appropriate cable, meeting fire-safety standards, must be used any time cabling is routed:
  - Through an overhead drop-ceiling
  - Under raised flooring
  - From room to room
  - From floor to floor

  Be sure that the cable jacket or sleeving is made of material that does not burn easily and does not exude toxic fumes when exposed to heat. Be sure that the cable you have selected is appropriate for your installation site. If you require a U.S. plenum-rated (CL2P) cable, contact your local HP authorized reseller to obtain any of the following options:
  - 149363-B21-20-foot plenum cable
  - 149364-B21-40-foot plenum cable
- Rack baying option kits—The number of baying kits needed to join a series of racks is one less than the number of racks in the suite. Each baying kit supplies parts to bay two cabinets on 600 mm (24 in) center line spacing.
- Side panels—Only one set of side panels is required for each row of bayed racks.
- Stabilizer kit—A stabilizer kit is either required or recommended, depending on your rack configuration.

General component placement guidelines

WARNING: To reduce the risk of personal injury or damage to the equipment, adequately stabilize the rack before extending a component outside the rack. Extend only one component at a time. A rack may become unstable if more than one component is extended.

WARNING: To reduce the risk of personal injury or damage to the equipment, always load the heaviest item first from the bottom of the rack up. This makes the rack bottom-heavy and helps prevent the rack from becoming unstable. Refer to Configuration Factors.

WARNING: To reduce the risk of personal injury or damage to the equipment, be sure that:

- The leveling feet are extended to the floor.
- The full weight of the rack rests on the leveling feet.
- The stabilizing feet are attached to the rack if it is a single-rack installation.
- The racks are coupled together in multiple-rack installations.
- Only one component is extended at a time. A rack may become unstable if more than one component is extended for any reason.

CAUTION: To reduce the risk of damage to the equipment when installing third-party options:

- Do not permit optional equipment to impede airflow around the chassis or to increase the internal rack temperature beyond the maximum allowable limits.
- Do not exceed the manufacturer's TMRA.

IMPORTANT: HP strongly recommends that you configure the rack using the HP eCo-Enterprise Configurator, which provides factory default racking. The latest version of this software is available on the HP website (http://h30099.www3.hp.com/eGlue/eco/begin.do).

When loading your components, observe the general guidelines:

- For detailed instructions on installing specific component or third-party hardware, see the user documentation that shipped with that component.
- Before installing components into the rack, see the "Electrostatic Discharge ("Electrostatic discharge prevention" on page 9)" section.
- Use the configuration prepared by the eCo Enterprise Configurator as a guideline for installation components.
- Load the heavier components first from the bottom of the rack.
- Be sure to balance the weight load among bayed racks. For example, if you have several UPS units and several servers, do not load all of the UPS units into one rack. Instead, distribute them evenly in the bottom positions of each rack.
- Allow a minimum clearance of 76 cm (30 in) between the wall and the rear of the rack to provide adequate access for installation and service.

Rack configuration software

To help you plan your rack configuration more efficiently, HP provides eCo-Enterprise Configurator, a powerful web-based service that enables you to build, store, and export end-to-end rack configurations. HP strongly recommends that you configure the rack using the eCo-Enterprise Configurator, which provides factory default racking. The latest version of the software is available on the HP website (http://h30099.www3.hp.com/eGlue/eco/begin.do).

Sample installation schedule

The following schedule lists the sequence of events for a typical system installation. For situations that prevent following this type of schedule, consider using a milestone schedule.

- 60 days before installation
  - Floor plan design completed and sent to Hewlett-Packard (if required to be an HP task)
- 30 days before installation
  - Primary power and air conditioning installation completed
  - Telephone and data cables installed
  - Fire protection equipment installed
  - Major facility changes completed
  - Special delivery requirements defined
  - Site inspection survey completed
  - Delivery survey completed
  - A signed copy of the site inspection and delivery survey sent to HP
  - Site inspection and predelivery coordination meeting arranged with an HP representative to review the inspection checklist and arrange an installation schedule
- 7 days before installation
  - Final check made with an HP site preparation specialist to resolve any last minute problems

Sample checklists

Customer and Hewlett-Packard information checklist:

Customer information	
Name:	Phone:
Street address:	City or town:
State or province:	Country:
Zip or postal code:	
Primary customer contact:	Phone:
Secondary customer contact:	Phone:
Traffic coordinator:	Phone:
Hewlett-Packard information	
Sales representative:	Phone:
Survey representative:	Date:
Order number:	Scheduled delivery date:

Sample site inspection checklist:

No.		**Yes**	**No**	**Comment or date**
	Computer room			
1.	Is there a completed floor plan?			

2.	Is there adequate space for maintenance needs? Minimum recommended clearances, front and rear: 914 mm (36 in).			
3.	Is access to the site or computer room restricted?			
4.	Is the computer room structurally complete?			
5.	Is a raised floor installed and in good condition?			
6.	Is the raised floor adequate for equipment loading?			
7.	Are there channels or cutouts for cable routing?			
8.	Is there a remote console telephone line available with an RJ-11 jack?			
9.	Is a telephone line available?			
10.	Are customer supplied peripheral cables and LAN cables available and of the proper type?			
11.	Are floor tiles in good condition and properly braced?			
12.	Is the floor tile underside shiny or painted? If painted, determine the need for particulate test.			
	Power and lighting			
13.	Are lighting levels adequate for maintenance?			
14.	Are AC outlets available for servicing needs? (for example, vacuuming)			
15.	Does the input voltage correspond to equipment specifications?			
16.	Is a dual power source used? If so, identify type and evaluate grounding.			
17.	Does the input frequency correspond to equipment specifications?			
18.	Are lighting arrestors installed inside the building?			
19.	Is power conditioning equipment installed?			
20.	Is there a dedicated branch circuit for equipment?			
21.	Is the dedicated branch circuit less than 72 m (250 ft)?			
22.	Are the input circuit breakers adequate for equipment loads?			
	Safety			
23.	Is there an emergency power shut-off switch?			
24.	Is a telephone available for emergency purposes?			
25.	Is a fire protection system installed in the computer room?			
26.	Is antistatic flooring installed?			
27.	Do any equipment servicing hazards exist (loose ground wires, poor lighting, or others)?			
	Cooling			
28.	Can cooling be maintained between 20°C and 55°C (up to 5000 ft)? Derate 1° C/1000 ft above 5000 ft and up to 10,000 ft.			
29.	Can temperature changes be held to 10°C/h with tape media? Can temperature changes be held to 20°C/h without tape media?			

30.	Can humidity levels be maintained at 40% to 60% at 35°C noncondensing?			
31.	Are air conditioning filters installed and clean?			
	Storage			
32.	Are cabinets available for tape and disc media?			
33.	Is shelving available for documentation?			
	Training			
34.	Are personnel enrolled in the System Administrator's Course?			
35.	Is on-site training required?			

Delivery survey

Special instructions or recommendations should be entered on the special instructions or recommendations form. The following list gives examples of special instructions or issues:

- Packaging restrictions at the facility, such as size and weight limitations
- Special delivery procedures
- Special equipment required for installation, such as tracking or hoists
- What time the facility is available for installation (after the equipment is unloaded)
- Special security requirements applicable to the facility, such as security clearance

Dock delivery	
Is the dock large enough for a semitrailer?	Yes or No
Location of the dock:	North, south, east, or west
Street name if different than company address:	
Street delivery	
Location of the access door:	North, south, east, or west
Street name if different than company address:	
Height of access door:	
Width of access door:	
Special permits (list type and agency obtained from):	
Elevator	
Capacity (kg or lb):	
Depth:	
Height:	
Width:	
Stairs	
Number of flights:	

Width:	

Conversion factors and formulas

Conversion factors

The conversion factors provided here are intended to help in data calculation for systems that do not conform to the specific configurations listed in this guide. Listed below are the conversion factors used in this document, as well as additional conversion factors that can be helpful in determining those factors required for site planning.

- Refrigeration
  - 1 watt = 0.86 kcal/h
  - 1 watt = 3.412 BTU/h
  - 1 watt = 2.843 x 10^{-4} tons
  - 1 ton = 200 BTU/min
  - 1 ton = 12,000 BTU/h
  - 1 ton = 3517.2 W
- Equivalents
  - 1 centimeter = 0.3937 in
  - 1 meter = 3.28 ft
  - 1 meter = 1.09 yards
  - 1 inch = 2.54 cm
  - 1 foot = 0.305 m
  - 1 CFM = 1.7 m^3/h

Formulas

The following formulas can be helpful in determining conversion factors required for site planning:

- kVA = voltage x Current (amps)
- Watts = VA x PF
- BTU = Watts x 3.41

Support and other resources

Before you contact HP

Be sure to have the following information available before you call HP:

- Active Health System log (HP ProLiant Gen8 or later products)

  Download and have available an Active Health System log for 3 days before the failure was detected. For more information, see the *HP iLO 4 User Guide* or *HP Intelligent Provisioning User Guide* on the HP website (http://www.hp.com/go/ilo/docs).
- Onboard Administrator SHOW ALL report (for HP BladeSystem products only)

  For more information on obtaining the Onboard Administrator SHOW ALL report, see the HP website (http://www.hp.com/go/OAlog).
- Technical support registration number (if applicable)
- Product serial number
- Product model name and number
- Product identification number
- Applicable error messages
- Add-on boards or hardware
- Third-party hardware or software
- Operating system type and revision level

HP contact information

For United States and worldwide contact information, see the Contact HP website (http://www.hp.com/go/assistance).

In the United States:

- To contact HP by phone, call 1-800-334-5144. For continuous quality improvement, calls may be recorded or monitored.
- If you have purchased a Care Pack (service upgrade), see the Support & Drivers website (http://www8.hp.com/us/en/support-drivers.html). If the problem cannot be resolved at the website, call 1-800-633-3600. For more information about Care Packs, see the HP website (http://pro-aq-sama.houston.hp.com/services/cache/10950-0-0-225-121.html).

Acronyms and abbreviations

ASHRAE

American Society of Heating, Refrigerating and Air-Conditioning Engineers

EMI

electromagnetic interference

EMT

electrical metallic tubing

ESD

electrostatic discharge

ISO

International Organization for Standardization

kVA

kilovolt-ampere

LAHJ

local authority has jurisdiction

PDU

power distribution unit

PF

power factor

RETMA

Radio Electronics Television Manufacturers Association (rack spacing)

RMS

root-mean-square

SRG

signal reference grid

TMRA

recommended ambient operating temperature

UPS

uninterruptible power system

Documentation feedback

HP is committed to providing documentation that meets your needs. To help us improve the documentation, send any errors, suggestions, or comments to Documentation Feedback (mailto:docsfeedback@hp.com). Include the document title and part number, version number, or the URL when submitting your feedback.

Index

A

acoustic noise specification 9
airflow requirements 11
authorized reseller 43

B

blanking panels 11

C

chassis environmental specifications 14
chassis specifications 31
computer safety ground 27
contacting HP 43
conversion factors 42

D

data communication cables 29

E

electrical factors 21
electrical load requirements 23
electrostatic discharge 9
environmental requirements 7, 14
environmental specifications 14
equipment clearance 12
equipment grounding details 28

F

features 5

G

grounding requirements 25, 26
grounding systems 26

H

hardware specifications and requirements 31

N

non-redundant power 24

O

operating environment, recommended 10
operational space requirements 12

P

phone numbers 43
power considerations 24
power consumption 22, 24
power distribution safety grounding 26
power quality 23
power redundancy 24
power requirements 21
power supply specifications 30

R

rack installation 18, 19
requirements, airflow 11

S

safety considerations 35
single-phase AC configuration 30
space requirements 11
space requirements, delivery 12
specifications 14, 31
support 43

T

technical support 43
telephone numbers 43
temperature requirements 14
third-party racks 19

W

warnings 12, 27, 32, 35