HP ProLiant SL170s G6 Server

Maintenance and Service Guide



Part number 625207-004
Fourth Edition March 2013

Legal notices

© Copyright 2010, 2013 Hewlett-Packard Development Company, L.P.

The information contained herein is subject to change without notice. The only warranties for HP products and services are set forth in the express warranty statements accompanying such products and services. Nothing herein should be construed as constituting an additional warranty. HP shall not be liable for technical or editorial errors or omissions contained herein.

Intel® and Xeon® are trademarks of Intel Corporation in the U.S. and other countries.

Contents

Customer self repair 5
Parts only warranty service 5
Illustrated parts catalog 16
Mechanical components 16
System components 19
HP contact information 25
Before you contact HP 25
Removal and replacement procedures 26
Hardware configuration tools 26
Hardware configuration information 26
Electrostatic discharge information 26
Pre-installation procedure 27
Post-installation procedure 27
Server warnings and cautions 27
Symbols on equipment 28
Powering down the server 29
System tray removal and replacement procedures 29
Cable management 31
Cable connections 32
Hard drives 33
Personality board 36
System board configuration 37
Processor 37
Memory 44
IPMI card 46
System battery 47
System board removal and replacement procedure 48
Power supply unit (PSU) 49
System fan 53
Connectors, switches, and LEDs 55
Connectors and components 55
Front panel components 55
Rear panel components 56
System board components 57
Jumpers – password and chassis ID 58
LED indicators 59
Front panel LED indicators 59
Rear panel UID LED indicator 62
Diagnostic tools and setup utilities 63
BIOS software 63
BIOS setup utility 63
Accessing the BIOS Setup Utility 63
Navigating through the Setup Utility 64
Setup utility menu bar 65
BIOS update 72
Clear CMOS 72

Power-on self-test (POST) 73
POST error indicators 73
POST errors message definitions 73
POST related troubleshooting 79
Physical and operating specifications 80
System unit 80
Documentation feedback 83
Index 84

Customer self repair

HP products are designed with many Customer Self Repair (CSR) parts to minimize repair time and allow for greater flexibility in performing defective parts replacement. If during the diagnosis period HP (or HP service providers or service partners) identifies that the repair can be accomplished by the use of a CSR part, HP will ship that part directly to you for replacement. There are two categories of CSR parts:

- **Mandatory**—Parts for which customer self repair is mandatory. If you request HP to replace these parts, you will be charged for the travel and labor costs of this service.
- **Optional**—Parts for which customer self repair is optional. These parts are also designed for customer self repair. If, however, you require that HP replace them for you, there may or may not be additional charges, depending on the type of warranty service designated for your product.

NOTE: Some HP parts are not designed for customer self repair. In order to satisfy the customer warranty, HP requires that an authorized service provider replace the part. These parts are identified as "No" in the Illustrated Parts Catalog.

Based on availability and where geography permits, CSR parts will be shipped for next business day delivery. Same day or four-hour delivery may be offered at an additional charge where geography permits. If assistance is required, you can call the HP Technical Support Center and a technician will help you over the telephone. HP specifies in the materials shipped with a replacement CSR part whether a defective part must be returned to HP. In cases where it is required to return the defective part to HP, you must ship the defective part back to HP within a defined period of time, normally five (5) business days. The defective part must be returned with the associated documentation in the provided shipping material. Failure to return the defective part may result in HP billing you for the replacement. With a customer self repair, HP will pay all shipping and part return costs and determine the courier/carrier to be used.

For more information about HP's Customer Self Repair program, contact your local service provider. For the North American program, see the HP website (http://www.hp.com/go/selfrepair).

Parts only warranty service

Your HP Limited Warranty may include a parts only warranty service. Under the terms of parts only warranty service, HP will provide replacement parts free of charge.

For parts only warranty service, CSR part replacement is mandatory. If you request HP to replace these parts, you will be charged for the travel and labor costs of this service.

Réparation par le client (CSR)

Les produits HP comportent de nombreuses pièces CSR (Customer Self Repair = réparation par le client) afin de minimiser les délais de réparation et faciliter le remplacement des pièces défectueuses. Si pendant la période de diagnostic, HP (ou ses partenaires ou mainteneurs agréés) détermine que la réparation peut être effectuée à l'aide d'une pièce CSR, HP vous l'envoie directement. Il existe deux catégories de pièces CSR:

- **Obligatoire** - Pièces pour lesquelles la réparation par le client est obligatoire. Si vous demandez à HP de remplacer ces pièces, les coûts de déplacement et main d'œuvre du service vous seront facturés.
- **Facultatif** - Pièces pour lesquelles la réparation par le client est facultative. Ces pièces sont également conçues pour permettre au client d'effectuer lui-même la réparation. Toutefois, si vous demandez à HP de remplacer ces pièces, l'intervention peut ou non vous être facturée, selon le type de garantie applicable à votre produit.

REMARQUE: Certaines pièces HP ne sont pas conçues pour permettre au client d'effectuer lui-même la réparation. Pour que la garantie puisse s'appliquer, HP exige que le remplacement de la pièce soit effectué par un Mainteneur Agréé. Ces pièces sont identifiées par la mention "Non" dans le Catalogue illustré.

Les pièces CSR sont livrées le jour ouvré suivant, dans la limite des stocks disponibles et selon votre situation géographique. Si votre situation géographique le permet et que vous demandez une livraison le jour même ou dans les 4 heures, celle-ci vous sera facturée. Pour bénéficier d'une assistance téléphonique, appelez le Centre d'assistance technique HP. Dans les documents envoyés avec la pièce de rechange CSR, HP précise s'il est nécessaire de lui retourner la pièce défectueuse. Si c'est le cas, vous devez le faire dans le délai indiqué, généralement cinq (5) jours ouvrés. La pièce et sa documentation doivent être retournées dans l'emballage fourni. Si vous ne retournez pas la pièce défectueuse, HP se réserve le droit de vous facturer les coûts de remplacement. Dans le cas d'une pièce CSR, HP supporte l'ensemble des frais d'expédition et de retour, et détermine la société de courses ou le transporteur à utiliser.

Pour plus d'informations sur le programme CSR de HP, contactez votre Mainteneur Agrée local. Pour plus d'informations sur ce programme en Amérique du Nord, consultez le site Web HP (**http://www.hp.com/go/selfrepair**).

Service de garantie "pièces seules"

Votre garantie limitée HP peut inclure un service de garantie "pièces seules". Dans ce cas, les pièces de rechange fournies par HP ne sont pas facturées.

Dans le cadre de ce service, la réparation des pièces CSR par le client est obligatoire. Si vous demandez à HP de remplacer ces pièces, les coûts de déplacement et main d'œuvre du service vous seront facturés.

Riparazione da parte del cliente

Per abbreviare i tempi di riparazione e garantire una maggiore flessibilità nella sostituzione di parti difettose, i prodotti HP sono realizzati con numerosi componenti che possono essere riparati direttamente dal cliente (CSR, Customer Self Repair). Se in fase di diagnostica HP (o un centro di servizi o di assistenza HP) identifica il guasto come riparabile mediante un ricambio CSR, HP lo spedirà direttamente al cliente per la sostituzione. Vi sono due categorie di parti CSR:

- **Obbligatorie** – Parti che devono essere necessariamente riparate dal cliente. Se il cliente ne affida la riparazione ad HP, deve sostenere le spese di spedizione e di manodopera per il servizio.
- **Opzionali** – Parti la cui riparazione da parte del cliente è facoltativa. Si tratta comunque di componenti progettati per questo scopo. Se tuttavia il cliente ne richiede la sostituzione ad HP, potrebbe dover sostenere spese addizionali a seconda del tipo di garanzia previsto per il prodotto.

NOTA: alcuni componenti HP non sono progettati per la riparazione da parte del cliente. Per rispettare la garanzia, HP richiede che queste parti siano sostituite da un centro di assistenza autorizzato. Tali parti sono identificate da un "No" nel Catalogo illustrato dei componenti.

In base alla disponibilità e alla località geografica, le parti CSR vengono spedite con consegna entro il giorno lavorativo seguente. La consegna nel giorno stesso o entro quattro ore è offerta con un supplemento di costo solo in alcune zone. In caso di necessità si può richiedere l'assistenza telefonica di un addetto del centro di supporto tecnico HP. Nel materiale fornito con una parte di ricambio CSR, HP specifica se il cliente deve restituire dei componenti. Qualora sia richiesta la resa ad HP del componente difettoso, lo si deve spedire ad HP entro un determinato periodo di tempo, generalmente cinque (5) giorni lavorativi. Il componente difettoso deve essere restituito con la documentazione associata nell'imballo di spedizione fornito. La mancata restituzione del componente può comportare la fatturazione del ricambio da parte di HP. Nel caso di riparazione da parte del cliente, HP sostiene tutte le spese di spedizione e resa e sceglie il corriere/vettore da utilizzare.

Per ulteriori informazioni sul programma CSR di HP contattare il centro di assistenza di zona. Per il programma in Nord America fare riferimento al sito Web HP (**http://www.hp.com/go/selfrepair**).

Servizio di garanzia per i soli componenti

La garanzia limitata HP può includere un servizio di garanzia per i soli componenti. Nei termini di garanzia del servizio per i soli componenti, HP fornirà gratuitamente le parti di ricambio.

Per il servizio di garanzia per i soli componenti è obbligatoria la formula CSR che prevede la riparazione da parte del cliente. Se il cliente invece richiede la sostituzione ad HP, dovrà sostenere le spese di spedizione e di manodopera per il servizio.

Customer Self Repair

HP Produkte enthalten viele CSR-Teile (Customer Self Repair), um Reparaturzeiten zu minimieren und höhere Flexibilität beim Austausch defekter Bauteile zu ermöglichen. Wenn HP (oder ein HP Servicepartner) bei der Diagnose feststellt, dass das Produkt mithilfe eines CSR-Teils repariert werden kann, sendet Ihnen HP dieses Bauteil zum Austausch direkt zu. CSR-Teile werden in zwei Kategorien unterteilt:

- **Zwingend –** Teile, für die das Customer Self Repair-Verfahren zwingend vorgegeben ist. Wenn Sie den Austausch dieser Teile von HP vornehmen lassen, werden Ihnen die Anfahrt- und Arbeitskosten für diesen Service berechnet.
- **Optional –** Teile, für die das Customer Self Repair-Verfahren optional ist. Diese Teile sind auch für Customer Self Repair ausgelegt. Wenn Sie jedoch den Austausch dieser Teile von HP vornehmen lassen möchten, können bei diesem Service je nach den für Ihr Produkt vorgesehenen Garantiebedingungen zusätzliche Kosten anfallen.

HINWEIS: Einige Teile sind nicht für Customer Self Repair ausgelegt. Um den Garantieanspruch des Kunden zu erfüllen, muss das Teil von einem HP Servicepartner ersetzt werden. Im illustrierten Teilekatalog sind diese Teile mit „No“ bzw. „Nein“ gekennzeichnet.

CSR-Teile werden abhängig von der Verfügbarkeit und vom Lieferziel am folgenden Geschäftstag geliefert. Für bestimmte Standorte ist eine Lieferung am selben Tag oder innerhalb von vier Stunden gegen einen Aufpreis verfügbar. Wenn Sie Hilfe benötigen, können Sie das HP technische Support Center anrufen und sich von einem Mitarbeiter per Telefon helfen lassen. Den Materialien, die mit einem CSR-Ersatzteil geliefert werden, können Sie entnehmen, ob das defekte Teil an HP zurückgeschickt werden muss. Wenn es erforderlich ist, das defekte Teil an HP zurückzuschicken, müssen Sie dies innerhalb eines vorgegebenen Zeitraums tun, in der Regel innerhalb von fünf (5) Geschäftstagen. Das defekte Teil muss mit der zugehörigen Dokumentation in der Verpackung zurückgeschickt werden, die im Lieferumfang enthalten ist. Wenn Sie das defekte Teil nicht zurückschicken, kann HP Ihnen das Ersatzteil in Rechnung stellen. Im Falle von Customer Self Repair kommt HP für alle Kosten für die Lieferung und Rücksendung auf und bestimmt den Kurier-/Frachtdienst.

Weitere Informationen über das HP Customer Self Repair Programm erhalten Sie von Ihrem Servicepartner vor Ort. Informationen über das CSR-Programm in Nordamerika finden Sie auf der HP Website unter (**http://www.hp.com/go/selfrepair**).

Parts-only Warranty Service (Garantieservice ausschließlich für Teile)

Ihre HP Garantie umfasst möglicherweise einen Parts-only Warranty Service (Garantieservice ausschließlich für Teile). Gemäß den Bestimmungen des Parts-only Warranty Service stellt HP Ersatzteile kostenlos zur Verfügung.

Für den Parts-only Warranty Service ist das CSR-Verfahren zwingend vorgegeben. Wenn Sie den Austausch dieser Teile von HP vornehmen lassen, werden Ihnen die Anfahrt- und Arbeitskosten für diesen Service berechnet.

Reparaciones del propio cliente

Los productos de HP incluyen muchos componentes que el propio usuario puede reemplazar (*Customer Self Repair*, CSR) para minimizar el tiempo de reparación y ofrecer una mayor flexibilidad a la hora de realizar sustituciones de componentes defectuosos. Si, durante la fase de diagnóstico, HP (o los proveedores o socios de servicio de HP) identifica que una reparación puede llevarse a cabo mediante el uso de un componente CSR, HP le enviará dicho componente directamente para que realice su sustitución. Los componentes CSR se clasifican en dos categorías:

- **Obligatorio:** componentes para los que la reparación por parte del usuario es obligatoria. Si solicita a HP que realice la sustitución de estos componentes, tendrá que hacerse cargo de los gastos de desplazamiento y de mano de obra de dicho servicio.
- **Opcional:** componentes para los que la reparación por parte del usuario es opcional. Estos componentes también están diseñados para que puedan ser reparados por el usuario. Sin embargo, si precisa que HP realice su sustitución, puede o no conllevar costes adicionales, dependiendo del tipo de servicio de garantía correspondiente al producto.

NOTA: Algunos componentes no están diseñados para que puedan ser reparados por el usuario. Para que el usuario haga valer su garantía, HP pone como condición que un proveedor de servicios autorizado realice la sustitución de estos componentes. Dichos componentes se identifican con la palabra "No" en el catálogo ilustrado de componentes.

Según la disponibilidad y la situación geográfica, los componentes CSR se enviarán para que lleguen a su destino al siguiente día laborable. Si la situación geográfica lo permite, se puede solicitar la entrega en el mismo día o en cuatro horas con un coste adicional. Si precisa asistencia técnica, puede llamar al Centro de asistencia técnica de HP y recibirá ayuda telefónica por parte de un técnico. Con el envío de materiales para la sustitución de componentes CSR, HP especificará si los componentes defectuosos deberán devolverse a HP. En aquellos casos en los que sea necesario devolver algún componente a HP, deberá hacerlo en el periodo de tiempo especificado, normalmente cinco días laborables. Los componentes defectuosos deberán devolverse con toda la documentación relacionada y con el embalaje de envío. Si no enviara el componente defectuoso requerido, HP podrá cobrarle por el de sustitución. En el caso de todas sustituciones que lleve a cabo el cliente, HP se hará cargo de todos los gastos de envío y devolución de componentes y escogerá la empresa de transporte que se utilice para dicho servicio.

Para obtener más información acerca del programa de Reparaciones del propio cliente de HP, póngase en contacto con su proveedor de servicios local. Si está interesado en el programa para Norteamérica, visite la página web de HP siguiente (**http://www.hp.com/go/selfrepair**).

Servicio de garantía exclusivo de componentes

La garantía limitada de HP puede que incluya un servicio de garantía exclusivo de componentes. Según las condiciones de este servicio exclusivo de componentes, HP le facilitará los componentes de repuesto sin cargo adicional alguno.

Para este servicio de garantía exclusivo de componentes, es obligatoria la sustitución de componentes por parte del usuario (CSR). Si solicita a HP que realice la sustitución de estos componentes, tendrá que hacerse cargo de los gastos de desplazamiento y de mano de obra de dicho servicio.

Customer Self Repair

Veel onderdelen in HP producten zijn door de klant zelf te repareren, waardoor de reparatieduur tot een minimum beperkt kan blijven en de flexibiliteit in het vervangen van defecte onderdelen groter is. Deze onderdelen worden CSR-onderdelen (Customer Self Repair) genoemd. Als HP (of een HP Service Partner) bij de diagnose vaststelt dat de reparatie kan worden uitgevoerd met een CSR-onderdeel, verzendt HP dat onderdeel rechtstreeks naar u, zodat u het defecte onderdeel daarmee kunt vervangen. Er zijn twee categorieën CSR-onderdelen:

- **Verplicht:** Onderdelen waarvoor reparatie door de klant verplicht is. Als u HP verzoekt deze onderdelen voor u te vervangen, worden u voor deze service reiskosten en arbeidsloon in rekening gebracht.
- **Optioneel:** Onderdelen waarvoor reparatie door de klant optioneel is. Ook deze onderdelen zijn ontworpen voor reparatie door de klant. Als u echter HP verzoekt deze onderdelen voor u te vervangen, kunnen daarvoor extra kosten in rekening worden gebracht, afhankelijk van het type garantieservice voor het product.

OPMERKING: Sommige HP onderdelen zijn niet ontwikkeld voor reparatie door de klant. In verband met de garantievoorwaarden moet het onderdeel door een geautoriseerde Service Partner worden vervangen. Deze onderdelen worden in de geïllustreerde onderdelencatalogus aangemerkt met "Nee".

Afhankelijk van de leverbaarheid en de locatie worden CSR-onderdelen verzonden voor levering op de eerstvolgende werkdag. Levering op dezelfde dag of binnen vier uur kan tegen meerkosten worden aangeboden, indien dit mogelijk is gezien de locatie. Indien assistentie gewenst is, belt u een HP Service Partner om via de telefoon technische ondersteuning te ontvangen. HP vermeldt in de documentatie bij het vervangende CSR-onderdeel of het defecte onderdeel aan HP moet worden geretourneerd. Als het defecte onderdeel aan HP moet worden teruggezonden, moet u het defecte onderdeel binnen een bepaalde periode, gewoonlijk vijf (5) werkdagen, retourneren aan HP. Het defecte onderdeel moet met de bijbehorende documentatie worden geretourneerd in het meegeleverde verpakkingsmateriaal. Als u het defecte onderdeel niet terugzendt, kan HP u voor het vervangende onderdeel kosten in rekening brengen. Bij reparatie door de klant betaalt HP alle verzendkosten voor het vervangende en geretourneerde onderdeel en kiest HP zelf welke koerier/transportonderneming hiervoor wordt gebruikt.

Neem contact op met een Service Partner voor meer informatie over het Customer Self Repair programma van HP. Informatie over Service Partners vindt u op de HP website (http://www.hp.nl/services/servicepartners).

Garantieservice "Parts Only"

Het is mogelijk dat de HP garantie alleen de garantieservice "Parts Only" omvat. Volgens de bepalingen van de Parts Only garantieservice zal HP kosteloos vervangende onderdelen ter beschikking stellen.

Voor de Parts Only garantieservice is vervanging door CSR-onderdelen verplicht. Als u HP verzoekt deze onderdelen voor u te vervangen, worden u voor deze service reiskosten en arbeidsloon in rekening gebracht.

Reparo feito pelo cliente

Os produtos da HP são projetados com muitas peças para reparo feito pelo cliente (CSR) de modo a minimizar o tempo de reparo e permitir maior flexibilidade na substituição de peças com defeito. Se, durante o período de diagnóstico, a HP (ou fornecedores/parceiros de serviço da HP) concluir que o reparo pode ser efetuado pelo uso de uma peça CSR, a peça de reposição será enviada diretamente ao cliente. Existem duas categorias de peças CSR:

- **Obrigatória** – Peças cujo reparo feito pelo cliente é obrigatório. Se desejar que a HP substitua essas peças, serão cobradas as despesas de transporte e mão-de-obra do serviço.
- **Opcional** – Peças cujo reparo feito pelo cliente é opcional. Essas peças também são projetadas para o reparo feito pelo cliente. No entanto, se desejar que a HP as substitua, pode haver ou não a cobrança de taxa adicional, dependendo do tipo de serviço de garantia destinado ao produto.

OBSERVAÇÃO: Algumas peças da HP não são projetadas para o reparo feito pelo cliente. A fim de cumprir a garantia do cliente, a HP exige que um técnico autorizado substitua a peça. Essas peças estão identificadas com a marca "No" (Não), no catálogo de peças ilustrado.

Conforme a disponibilidade e o local geográfico, as peças CSR serão enviadas no primeiro dia útil após o pedido. Onde as condições geográficas permitirem, a entrega no mesmo dia ou em quatro horas pode ser feita mediante uma taxa adicional. Se precisar de auxílio, entre em contato com o Centro de suporte técnico da HP para que um técnico o ajude por telefone. A HP especifica nos materiais fornecidos com a peça CSR de reposição se a peça com defeito deve ser devolvida à HP. Nos casos em que isso for necessário, é preciso enviar a peça com defeito à HP dentro do período determinado, normalmente cinco (5) dias úteis. A peça com defeito deve ser enviada com a documentação correspondente no material de transporte fornecido. Caso não o faça, a HP poderá cobrar a reposição. Para as peças de reparo feito pelo cliente, a HP paga todas as despesas de transporte e de devolução da peça e determina a transportadora/serviço postal a ser utilizado.

Para obter mais informações sobre o programa de reparo feito pelo cliente da HP, entre em contato com o fornecedor de serviços local. Para o programa norte-americano, visite o site da HP (**http://www.hp.com/go/selfrepair**).

Serviço de garantia apenas para peças

A garantia limitada da HP pode incluir um serviço de garantia apenas para peças. Segundo os termos do serviço de garantia apenas para peças, a HP fornece as peças de reposição sem cobrar nenhuma taxa.

No caso desse serviço, a substituição de peças CSR é obrigatória. Se desejar que a HP substitua essas peças, serão cobradas as despesas de transporte e mão-de-obra do serviço.

カスタマーセルフリペア

修理時間を短縮し、故障部品の交換における高い柔軟性を確保するために、HP製品には多数のCSR部品があります。診断の際に、CSR部品を使用すれば修理ができるとHP（HPまたはHP正規保守代理店）が判断した場合、HPはその部品を直接、お客様に発送し、お客様に交換していただきます。CSR部品には以下の2通りがあります。

- **必須 -** カスタマーセルフリペアが必須の部品。当該部品について、もしもお客様がHPに交換作業を依頼される場合には、その修理サービスに関する交通費および人件費がお客様に請求されます。
- **任意 -** カスタマーセルフリペアが任意である部品。この部品もカスタマーセルフリペア用です。当該部品について、もしもお客様がHPに交換作業を依頼される場合には、お買い上げの製品に適用される保証サービス内容の範囲内においては、別途費用を負担していただくことなく保証サービスを受けることができます。

注： HP製品の一部の部品は、カスタマーセルフリペア用ではありません。製品の保証を継続するためには、HPまたはHP正規保守代理店による交換作業が必須となります。部品カタログには、当該部品がカスタマーセルフリペア除外品である旨が記載されています。

部品供給が可能な場合、地域によっては、CSR部品を翌営業日に届くように発送します。また、地域によっては、追加費用を負担いただくことにより同日または4時間以内に届くように発送することも可能な場合があります。サポートが必要なときは、HPの修理受付窓口に電話していただければ、技術者が電話でアドバイスします。交換用のCSR部品または同梱物には、故障部品をHPに返送する必要があるかどうかが表示されています。故障部品をHPに返送する必要がある場合は、指定期限内（通常は5営業日以内）に故障部品をHPに返送してください。故障部品を返送する場合は、届いた時の梱包箱に関連書類とともに入れてください。故障部品を返送しない場合、HPから部品費用が請求されます。カスタマーセルフリペアの際には、HPは送料および部品返送費を全額負担し、使用する宅配便会社や運送会社を指定します。

部品のみ保証サービス

HP保証サービスには、部品のみ保証サービスが適用される場合があります。このサービスでは、交換部品は無償で提供されます。

部品のみ保証サービスにおいては、CSR部品をお客様により交換作業していただくことが必須となります。当該部品について、もしもお客様がHPに交換作業を依頼される場合には、その修理サービスに関する交通費および人件費はお客様の負担となります。

客户自行维修

HP 产品提供许多客户自行维修 (CSR) 部件，以尽可能缩短维修时间和在更换缺陷部件方面提供更大的灵活性。如果在诊断期间 HP（或 HP 服务提供商或服务合作伙伴）确定可以通过使用 CSR 部件完成维修，HP 将直接把该部件发送给您进行更换。有两类 CSR 部件：

- **强制性的** — 要求客户必须自行维修的部件。如果您请求 HP 更换这些部件，则必须为该服务支付差旅费和人工费用。
- **可选的** — 客户可以选择是否自行维修的部件。这些部件也是为客户自行维修设计的。不过，如果您要求 HP 为您更换这些部件，则根据为您的产品指定的保修服务类型，HP 可能收取或不再收取任何附加费用。

注：某些 HP 部件的设计并未考虑客户自行维修。为了满足客户保修的需要，HP 要求授权服务提供商更换相关部件。这些部件在部件图解目录中标记为“否”。

CSR 部件将在下一个工作日发运（取决于备货情况和允许的地理范围）。在允许的地理范围内，可在当天或四小时内发运，但要收取额外费用。如果需要帮助，您可以致电 HP 技术支持中心，将会有技术人员通过电话为您提供帮助。HP 会在随更换的 CSR 部件发运的材料中指明是否必须将有缺陷的部件返还给 HP。如果要求您将有缺陷的部件返还给 HP，那么您必须在规定期限内（通常是五 (5) 个工作日）将缺陷部件发给 HP。有缺陷的部件必须随所提供的发运材料中的相关文件一起返还。如果未能送还有缺陷的部件，HP 可能会要求您支付更换费用。客户自行维修时，HP 将承担所有相关运输和部件返回费用，并指定快递商/承运商。

有关 HP 客户自行维修计划的详细信息，请与您当地的服务提供商联系。有关北美地区的计划，请访问 HP 网站 (http://www.hp.com/go/selfrepair)。

仅部件保修服务

您的 HP 有限保修服务可能涉及仅部件保修服务。根据仅部件保修服务条款的规定，HP 将免费提供更换的部件。

仅部件保修服务要求进行 CSR 部件更换。如果您请求 HP 更换这些部件，则必须为该服务支付差旅费和人工费用。

客戶自行維修

HP 產品設計了許多「客戶自行維修」(CSR) 的零件以減少維修時間，並且使得更換瑕疵零件時能有更大的彈性。如果在診斷期間 HP（或 HP 服務供應商或維修夥伴）辨認出此項維修工作可以藉由使用 CSR 零件來完成，則 HP 將直接寄送該零件給您作更換。CSR 零件分為兩種類別：

- **強制的** — 客戶自行維修所使用的零件是強制性的。如果您要求 HP 更換這些零件，HP 將會向您收取此服務所需的外出費用與勞動成本。
- **選購的** — 客戶自行維修所使用的零件是選購的。這些零件也設計用於客戶自行維修之用。不過，如果您要求 HP 為您更換，則可能需要也可能不需要負擔額外的費用，端視針對此產品指定的保固服務類型而定。

備註：某些 HP 零件沒有消費者可自行維修的設計。為符合客戶保固，HP 需要授權的服務供應商更換零件。這些零件在圖示的零件目錄中，被標示為「否」。

基於材料取得及環境允許的情況下，CSR 零件將於下一個工作日以快遞寄送。在環境的允許下當天或四小時內送達，則可能需要額外的費用。若您需要協助，可致電「HP 技術支援中心」，會有一位技術人員透過電話來協助您。不論損壞的零件是否必須退回，HP 皆會在與 CSR 替換零件一起運送的材料中註明。若要將損壞的零件退回 HP，您必須在指定的一段時間內（通常為五 (5) 個工作天），將損壞的零件寄回 HP。損壞的零件必須與寄送資料中隨附的相關技術文件一併退還。如果無法退還損壞的零件，HP 可能要向您收取替換費用。針對客戶自行維修情形，HP 將負責所有運費及零件退還費用並指定使用何家快遞/貨運公司。

如需 HP 的「客戶自行維修」方案詳細資訊，請連絡您當地的服務供應商。至於北美方案，請參閱 HP 網站 (http://www.hp.com/go/selfrepair)。

僅限零件的保固服務

您的「HP 有限保固」可能包含僅限零件的保固服務。在僅限零件的保固服務情況下，HP 將免費提供替換零件。

針對僅限零件的保固服務，CSR 零件替換是強制性的。如果您要求 HP 更換這些零件，HP 將會向您收取此服務所需的外出費用與勞動成本。

고객 셀프 수리

HP 제품은 수리 시간을 최소화하고 결함이 있는 부품 교체 시 더욱 융통성을 발휘할 수 있도록 하기 위해 고객 셀프 수리(CSR) 부품을 다량 사용하여 설계되었습니다. 진단 기간 동안 HP(또는 HP 서비스 공급업체 또는 서비스 협력업체)에서 CSR 부품을 사용하여 수리가 가능하다고 판단되면 HP는 해당 부품을 바로 사용자에게 보내어 사용자가 교체할 수 있도록 합니다. CSR 부품에는 두 가지 종류가 있습니다.

- **고객 셀프 수리가 의무 사항인 필수 부품.** 사용자가 HP에 이 부품의 교체를 요청할 경우 이 서비스에 대한 출장비 및 작업비가 청구됩니다.
- **고객 셀프 수리가 선택 사항인 부품.** 이 부품들도 고객 셀프 수리가 가능하도록 설계되었습니다. 하지만 사용자가 HP에 이 부품의 교체를 요청할 경우 사용자가 구입한 제품에 해당하는 보증 서비스 유형에 따라 추가 비용 없이 교체가 가능할 수 있습니다.

참고: 일부 HP 부품은 고객 셀프 수리가 불가능하도록 설계되었습니다. HP는 만족스러운 고객 보증을 위해 공인 서비스 제공업체를 통해 부품을 교체하도록 하고 있습니다. 이러한 부품들은 Illustrated Parts Catalog에 "No"라고 표시되어 있습니다.

CSR 부품은 재고 상태와 지리적 조건이 허용하는 경우 다음 영업일 납품이 가능하도록 배송이 이루어집니다. 지리적 조건이 허용하는 경우 추가 비용이 청구되는 조건으로 당일 또는 4시간 배송이 가능할 수도 있습니다. 도움이 필요하시면 HP 기술 지원 센터로 전화하십시오. 전문 기술자가 전화로 도움을 줄 것입니다. HP는 결함이 발생한 부품을 HP로 반환해야 하는지 여부를 CSR 교체 부품과 함께 배송된 자료에 지정합니다. 결함이 발생한 부품을 HP로 반환해야 하는 경우에는 지정된 기간 내(통상 영업일 기준 5일)에 HP로 반환해야 합니다. 이 때 결함이 발생한 부품은 제공된 포장 재료에 넣어 관련 설명서와 함께 반환해야 합니다. 결함이 발생한 부품을 반환하지 않는 경우 HP가 교체 부품에 대해 비용을 청구할 수 있습니다. 고객 셀프 수리의 경우, HP는 모든 운송 및 부품 반환 비용을 부담하며 이용할 운송업체 및 택배 서비스를 결정합니다.

HP 고객 셀프 수리 프로그램에 대한 자세한 내용은 가까운 서비스 제공업체에 문의하십시오. 북미 지역의 프로그램에 대해서는 HP 웹 사이트(http://www.hp.com/go/selfrepair)를 참조하십시오.

부품 제공 보증 서비스

HP 제한 보증에는 부품 제공 보증 서비스가 포함될 수 있습니다. 이러한 경우 HP는 부품 제공 보증 서비스의 조건에 따라 교체 부품만을 무료로 제공합니다.

부품 제공 보증 서비스 제공 시 CSR 부품 교체는 의무 사항입니다. 사용자가 HP에 이 부품의 교체를 요청할 경우 이 서비스에 대한 출장비 및 작업비가 청구됩니다.

Illustrated parts catalog

Mechanical components

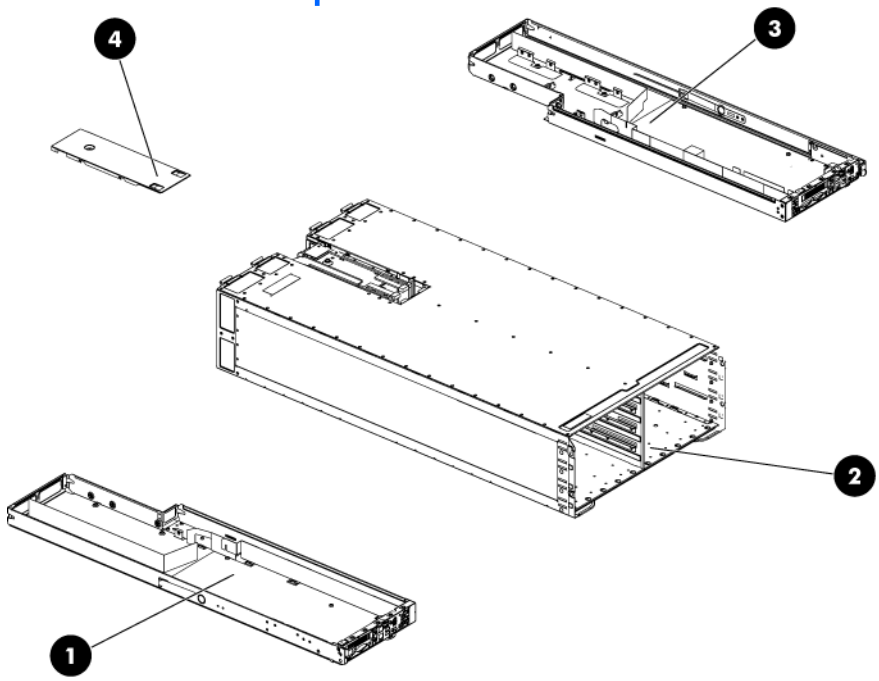

Item	Description	Spare part number	Customer self repair
1	Left tray	—	—
2	s6500 4U chassis	—	—
3	Right tray	—	—
4	Power supply top cover	—	—

[1]Mandatory—Parts for which customer self repair is mandatory. If you request HP to replace these parts, you will be charged for the travel and labor costs of this service.

[2]Optional—Parts for which customer self repair is optional. These parts are also designed for customer self repair. If, however, you require that HP replace them for you, there may or may not be additional charges, depending on the type of warranty service designated for your product.

[3]No—Some HP parts are not designed for customer self repair. In order to satisfy the customer warranty, HP requires that an authorized service provider replace the part. These parts are identified as "No" in the Illustrated Parts Catalog.

[1]Mandatory : Obligatoire—Pièces pour lesquelles la réparation par le client est obligatoire. Si vous demandez à HP de remplacer ces pièces, les coûts de déplacement et main d'œuvre du service vous seront facturés.

[2]Optional : Facultatif—Pièces pour lesquelles la réparation par le client est facultative. Ces pièces sont également conçues pour permettre au client d'effectuer lui-même la réparation. Toutefois, si vous

demandez à HP de remplacer ces pièces, l'intervention peut ou non vous être facturée, selon le type de garantie applicable à votre produit.

[3]No : Non—Certaines pièces HP ne sont pas conçues pour permettre au client d'effectuer lui-même la réparation. Pour que la garantie puisse s'appliquer, HP exige que le remplacement de la pièce soit effectué par un Mainteneur Agréé. Ces pièces sont identifiées par la mention "Non" dans le Catalogue illustré.

[1]Mandatory: Obbligatorie—Parti che devono essere necessariamente riparate dal cliente. Se il cliente ne affida la riparazione ad HP, deve sostenere le spese di spedizione e di manodopera per il servizio.

[2]Optional: Opzionali—Parti la cui riparazione da parte del cliente è facoltativa. Si tratta comunque di componenti progettati per questo scopo. Se tuttavia il cliente ne richiede la sostituzione ad HP, potrebbe dover sostenere spese addizionali a seconda del tipo di garanzia previsto per il prodotto.

[3]No: Non CSR—Alcuni componenti HP non sono progettati per la riparazione da parte del cliente. Per rispettare la garanzia, HP richiede che queste parti siano sostituite da un centro di assistenza autorizzato. Tali parti sono identificate da un "No" nel Catalogo illustrato dei componenti.

[1]Mandatory: Zwingend—Teile, die im Rahmen des Customer Self Repair Programms ersetzt werden müssen. Wenn Sie diese Teile von HP ersetzen lassen, werden Ihnen die Versand- und Arbeitskosten für diesen Service berechnet.

[2]Optional: Optional—Teile, für die das Customer Self Repair-Verfahren optional ist. Diese Teile sind auch für Customer Self Repair ausgelegt. Wenn Sie jedoch den Austausch dieser Teile von HP vornehmen lassen möchten, können bei diesem Service je nach den für Ihr Produkt vorgesehenen Garantiebedingungen zusätzliche Kosten anfallen.

[3]No: Kein—Einige Teile sind nicht für Customer Self Repair ausgelegt. Um den Garantieanspruch des Kunden zu erfüllen, muss das Teil von einem HP Servicepartner ersetzt werden. Im illustrierten Teilekatalog sind diese Teile mit „No" bzw. „Nein" gekennzeichnet.

[1]Mandatory: Obligatorio—componentes para los que la reparación por parte del usuario es obligatoria. Si solicita a HP que realice la sustitución de estos componentes, tendrá que hacerse cargo de los gastos de desplazamiento y de mano de obra de dicho servicio.

[2]Optional: Opcional— componentes para los que la reparación por parte del usuario es opcional. Estos componentes también están diseñados para que puedan ser reparados por el usuario. Sin embargo, si precisa que HP realice su sustitución, puede o no conllevar costes adicionales, dependiendo del tipo de servicio de garantía correspondiente al producto.

[3]No: No—Algunos componentes no están diseñados para que puedan ser reparados por el usuario. Para que el usuario haga valer su garantía, HP pone como condición que un proveedor de servicios autorizado realice la sustitución de estos componentes. Dichos componentes se identifican con la palabra "No" en el catálogo ilustrado de componentes.

[1]Mandatory: Verplicht—Onderdelen waarvoor Customer Self Repair verplicht is. Als u HP verzoekt deze onderdelen te vervangen, komen de reiskosten en het arbeidsloon voor uw rekening.

[2]Optional: Optioneel—Onderdelen waarvoor reparatie door de klant optioneel is. Ook deze onderdelen zijn ontworpen voor reparatie door de klant. Als u echter HP verzoekt deze onderdelen

voor u te vervangen, kunnen daarvoor extra kosten in rekening worden gebracht, afhankelijk van het type garantieservice voor het product.

[3]No: Nee—Sommige HP onderdelen zijn niet ontwikkeld voor reparatie door de klant. In verband met de garantievoorwaarden moet het onderdeel door een geautoriseerde Service Partner worden vervangen. Deze onderdelen worden in de geïllustreerde onderdelencatalogus aangemerkt met "Nee".

[1]Mandatory: Obrigatória—Peças cujo reparo feito pelo cliente é obrigatório. Se desejar que a HP substitua essas peças, serão cobradas as despesas de transporte e mão-de-obra do serviço.

[2]Optional: Opcional—Peças cujo reparo feito pelo cliente é opcional. Essas peças também são projetadas para o reparo feito pelo cliente. No entanto, se desejar que a HP as substitua, pode haver ou não a cobrança de taxa adicional, dependendo do tipo de serviço de garantia destinado ao produto.

[3]No: Nenhuma—Algumas peças da HP não são projetadas para o reparo feito pelo cliente. A fim de cumprir a garantia do cliente, a HP exige que um técnico autorizado substitua a peça. Essas peças estão identificadas com a marca "No" (Não), no catálogo de peças ilustrado.

[1]Mandatory：必須 - 顧客自己修理が必須の部品。当該部品について、もしもお客様がHPに交換作業を依頼される場合には、その修理サービスに関する交通費および人件費がお客様に請求されます。

[2]Optional：任意 - 顧客自己修理が任意である部品。この部品も顧客自己修理用です。当該部品について、もしもお客様がHPに交換作業を依頼される場合には、お買い上げの製品に適用される保証サービス内容の範囲内においては、費用を負担していただくことなく保証サービスを受けることができます。

[3]No：除外 - HP製品の一部の部品は、顧客自己修理用ではありません。製品の保証を継続するためには、HPまたはHP正規保守代理店による交換作業が必須となります。部品カタログには、当該部品が顧客自己修理除外品である旨が記載されています。

[1]Mandatory: 强制性的 — 要求客户必须自行维修的部件。如果您请求 HP 更换这些部件，则必须为该服务支付差旅费和人工费用。

[2]Optional: 可选的 — 客户可以选择是否自行维修的部件。这些部件也是为客户自行维修设计的。不过，如果您要求 HP 为您更换这些部件，则根据为您的产品指定的保修服务类型，HP 可能收取或不再收取任何附加费用。

[3]No: 否 — 某些 HP 部件的设计并未考虑客户自行维修。为了满足客户保修的需要，HP 要求授权服务提供商更换相关部件。这些部件在部件图解目录中标记为“否”。

[1]Mandatory: 強制的 — 客戶自行維修所使用的零件是強制性的。如果您要求 HP 更換這些零件，HP 將會向您收取此服務所需的外出費用與勞動成本。

[2]Optional: 選購的 — 客戶自行維修所使用的零件是選購的。這些零件也設計用於客戶自行維修之用。不過，如果您要求 HP 為您更換，則可能需要也可能不需要負擔額外的費用，端視針對此產品指定的保固服務類型而定。

[3]No: 否 — 某些 HP 零件沒有消費者可自行維修的設計。為符合客戶保固，HP 需要授權的服務供應商更換零件。這些零件在圖示的零件目錄中，被標示為「否」。

[1] Mandatory: 필수 — 고객 셀프 수리가 의무 사항인 필수 부품. 사용자가 HP에 이 부품의 교체를 요청할 경우 이 서비스에 대한 출장비 및 작업비가 청구됩니다.

[2] Optional: 옵션 — 고객 셀프 수리가 선택 사항인 부품. 이 부품들도 고객 셀프 수리가 가능하도록 설계되었습니다. 하지만 사용자가 HP에 이 부품의 교체를 요청할 경우 사용자가 구입한 제품에 해당하는 보증 서비스 유형에 따라 추가 비용 없이 교체가 가능할 수 있습니다.

[3] No: No — 고객 셀프 수리가 불가능하도록 설계된 HP 부품. 이 부품들은 고객 셀프 수리가 불가능하도록 설계되었습니다. HP는 고객 보증을 만족시키기 위해 공인 서비스 제공업체를 통해 부품을 교체하도록 하고 있습니다.

System components

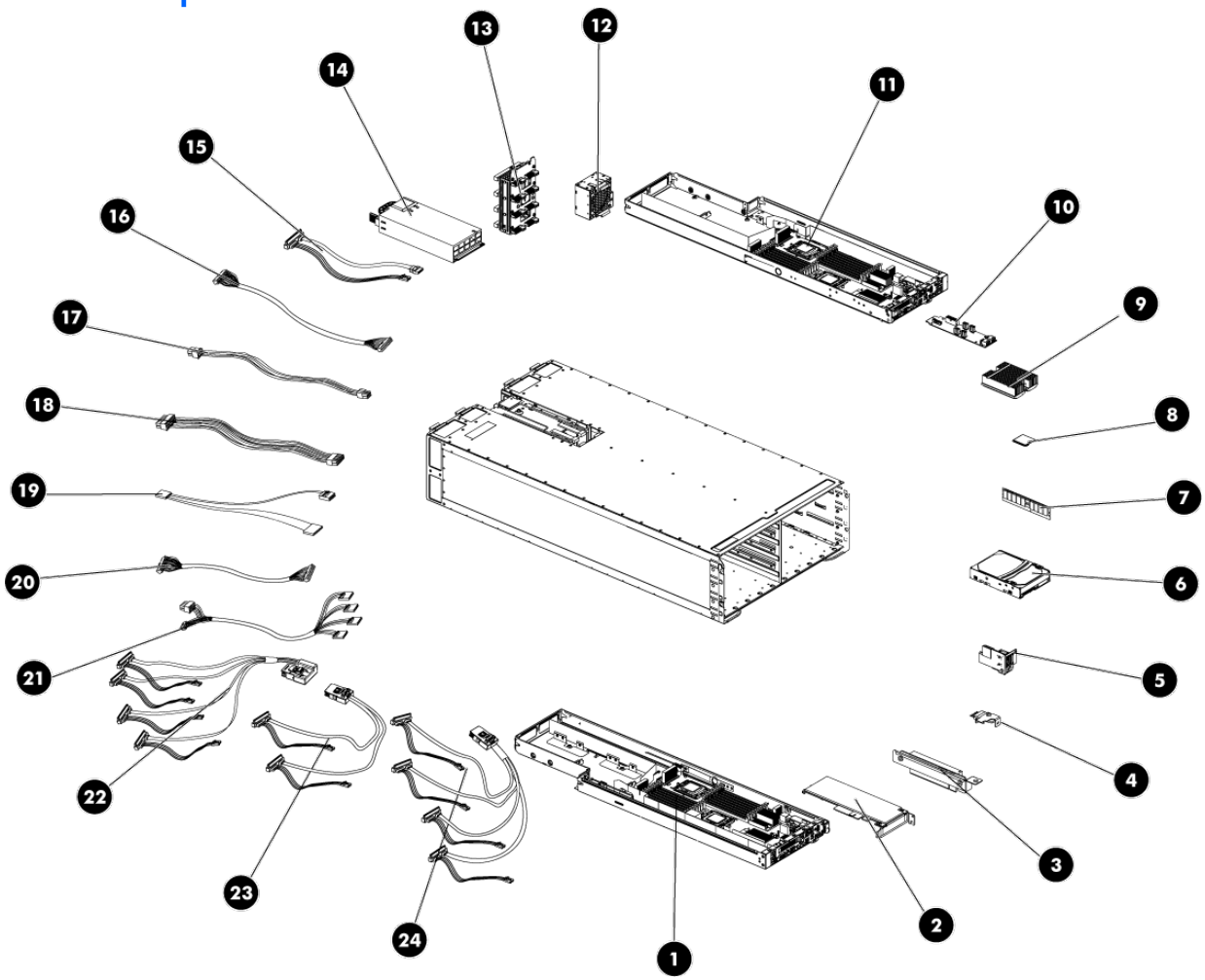

Item	Description	Spare part number	Customer self repair
1	System board	608880-001	Optional[2]
2	Front PCIe board	600665-001	Optional[2]
3	PCIe x16 riser card with Modkey	589015-001	Optional[2]
	PCIe x16 riser card	536654-001	Optional[2]
4	Thermal sensor board	576888-001	Optional[2]
5	IPMI card	606378-001	Optional[2]
6	Hard drive options	—	—
	Hard drive, SAS 300GB 15K 6G LFF	586009-001	Optional[2]
	Hard drive, SAS 300GB 10K 6G 2.5	575055-001	Optional[2]
	Hard drive, SAS 450GB 15K 3G LFF	574272-001	Optional[2]
	Hard drive, SAS 600GB 15K 6G LFF	575056-001	Optional[2]
	Hard drive, SAS 2TB 7.2K 3G LFF	575262-001	Optional[2]

Item	Description	Spare part number	Customer self repair
	Hard drive, SAS 2TB 15K 6G LFF	575057-001	Optional[2]
	Hard drive, SATA 160GB 7.2K SFF	575053-001	Optional[2]
	Hard drive, SATA 160GB 7.2K LFF	574269-001	Optional[2]
	Hard drive, SATA 500GB 7.2K SFF	575054-001	Optional[2]
	Hard drive, SATA 300GB 10K SFF	601774-001	Optional[2]
	Hard drive, SATA 500GB 7.2K LFF	574270-001	Optional[2]
	Hard drive, SATA 1TB 7.2K LFF	574271-001	Optional[2]
	Hard drive, SATA 2TB 7.2K 3GB LFF	575262-001	Optional[2]
	Hard drive, SSD 64GB SFF	461333-001	Optional[2]
	Hard drive, SSD 60GB SFF	586656-001	Optional[2]
	Hard drive, SSD 120GB SFF	586657-001	Optional[2]
7	Memory modules	—	—
	DIMM PC3-10600E 1GB	501539-001	Mandatory[1]
	DIMM PC3-10600E 2GB	501540-001	Mandatory[1]
	DIMM PC3-10600R 2GB	501533-001	Mandatory[1]
	DIMM PC3-10600R 4GB	501534-001	Mandatory[1]
	DIMM PC3L-1600R 4GB	617677-001	Mandatory[1]
	DIMM PC3-8500R 4GB	501535-001	Mandatory[1]
	DIMM PC3-8500R 8GB	519201-001	Mandatory[1]
8	Processors, Optional series	—	—
	Processor Intel X5670 2.93Ghz 12M 95W	594882-001	Optional[2]
	Processor Intel X5660 2.8Ghz 12M 95W	594883-001	Optional[2]
	Processor Intel X5550 2.66Ghz 12M 95W	594884-001	Optional[2]
	Processor Intel X5667 3.06Ghz 12M 95W	614553-001	Optional[2]
	Processor Intel X5630 2.53Ghz 12M 80W	594886-001	Optional[2]
	Processor Intel X5690 3.46Ghz 12M, 130W	638136-001	Optional[2]
	Processor Intel X5687 3.60Ghz 12M, 130W	638137-001	Optional[2]
	Processor Intel X5675 3.06Ghz 12M, 95W	638134-001	Optional[2]
	Processor Intel X5672 3.2Ghz 12M, 95W	638135-001	Optional[2]
	Processor Intel E5620 2.40Ghz 12M 80W	594887-001	Optional[2]

Item	Description	Spare part number	Customer self repair
	Processor Intel E5640 2.66Ghz 12M 80W	594885-001	Optional[2]
	Processor Intel E5506 2.13Ghz 8M 80W	506013-001	Optional[2]
	Processor Intel E5503 2.00Ghz 4M 80W	594889-001	Optional[2]
	Processor Intel E5502 1.86Ghz, 4M,DC	490070-001	Optional[2]
	Processor Intel E5649 2.53Ghz 12M 80W	628695-001	Optional[2]
	Processor Intel E5645 2.4Ghz 12M 80W	628696-001	Optional[2]
	Processor Intel E5607 2.26Ghz 12M 80W	628698-001	Optional[2]
	Processor Intel E5606 2.13Ghz 12M 80W	628699-001	Optional[2]
	Processor Intel E5603 1.60Ghz 12M 80W	628700-001	Optional[2]
10	Personality board	622099-001	Optional[2]
11	System board	608880-001	Optional[2]
12	System fan	600659-001	Mandatory[1]
	Redundant system fan	620197-001	Mandatory[1]
13	Power/data backplane board	620752-001	Mandatory[1]
14	Power supply options	—	—
	1200-W Power Supply	498152-001	Mandatory[1]
	1200-W Power Supply High-Efficiency	579229-001	Mandatory[1]
	750-W Power Supply	511778-001	Mandatory[1]
	750-W Power Supply High-Efficiency	599383-001	Mandatory[1]
15	SATA power/data KPS short cable SATA power/data KPS long cable	629167-001 629168-001	Optional[2]
16	RPS right cable	629821-001	Optional[2]
17	System board power 14x12P right cable	630655-001	Optional[2]
18	MLB power left cable MLB power right cable	621295-001 621294-001	Optional[2]
19	Temperature sensor cable	576890-001	Optional[2]
20	Redundant power supply left cable Redundant power supply right cable	621293-001 621292-001	Optional[2]
21	s6500 chassis cable kit	600670-001	Optional[2]
22	SAS power cable	576907-001	Optional[2]
23	M/SAS-SAS 2 Port W/HSG 2X	590505-001	Optional[2]
24	SAS SL160/SL170 cable kit	576897-001	Optional[2]

[1]Mandatory—Parts for which customer self repair is mandatory. If you request HP to replace these parts, you will be charged for the travel and labor costs of this service.

[2]Optional—Parts for which customer self repair is optional. These parts are also designed for customer self repair. If, however, you require that HP replace them for you, there may or may not be additional charges, depending on the type of warranty service designated for your product.

[3]No—Some HP parts are not designed for customer self repair. In order to satisfy the customer warranty, HP requires that an authorized service provider replace the part. These parts are identified as "No" in the Illustrated Parts Catalog.

[1]Mandatory: Obligatoire—Pièces pour lesquelles la réparation par le client est obligatoire. Si vous demandez à HP de remplacer ces pièces, les coûts de déplacement et main d'œuvre du service vous seront facturés.

[2]Optional: Facultatif—Pièces pour lesquelles la réparation par le client est facultative. Ces pièces sont également conçues pour permettre au client d'effectuer lui-même la réparation. Toutefois, si vous demandez à HP de remplacer ces pièces, l'intervention peut ou non vous être facturée, selon le type de garantie applicable à votre produit.

[3]No: Non—Certaines pièces HP ne sont pas conçues pour permettre au client d'effectuer lui-même la réparation. Pour que la garantie puisse s'appliquer, HP exige que le remplacement de la pièce soit effectué par un Mainteneur Agréé. Ces pièces sont identifiées par la mention “Non” dans le Catalogue illustré.

[1]Mandatory: Obbligatorie—Parti che devono essere necessariamente riparate dal cliente. Se il cliente ne affida la riparazione ad HP, deve sostenere le spese di spedizione e di manodopera per il servizio.

[2]Optional: Opzionali—Parti la cui riparazione da parte del cliente è facoltativa. Si tratta comunque di componenti progettati per questo scopo. Se tuttavia il cliente ne richiede la sostituzione ad HP, potrebbe dover sostenere spese addizionali a seconda del tipo di garanzia previsto per il prodotto.

[3]No: Non CSR—Alcuni componenti HP non sono progettati per la riparazione da parte del cliente. Per rispettare la garanzia, HP richiede che queste parti siano sostituite da un centro di assistenza autorizzato. Tali parti sono identificate da un “No” nel Catalogo illustrato dei componenti.

[1]Mandatory: Zwingend—Teile, die im Rahmen des Customer Self Repair Programms ersetzt werden müssen. Wenn Sie diese Teile von HP ersetzen lassen, werden Ihnen die Versand- und Arbeitskosten für diesen Service berechnet.

[2]Optional: Optional—Teile, für die das Customer Self Repair-Verfahren optional ist. Diese Teile sind auch für Customer Self Repair ausgelegt. Wenn Sie jedoch den Austausch dieser Teile von HP vornehmen lassen möchten, können bei diesem Service je nach den für Ihr Produkt vorgesehenen Garantiebedingungen zusätzliche Kosten anfallen.

[3]No: Kein—Einige Teile sind nicht für Customer Self Repair ausgelegt. Um den Garantieanspruch des Kunden zu erfüllen, muss das Teil von einem HP Servicepartner ersetzt werden. Im illustrierten Teilekatalog sind diese Teile mit „No“ bzw. „Nein“ gekennzeichnet.

[1]Mandatory: Obligatorio—componentes para los que la reparación por parte del usuario es obligatoria. Si solicita a HP que realice la sustitución de estos componentes, tendrá que hacerse cargo de los gastos de desplazamiento y de mano de obra de dicho servicio.

[2]Optional: Opcional— componentes para los que la reparación por parte del usuario es opcional. Estos componentes también están diseñados para que puedan ser reparados por el usuario. Sin embargo, si precisa que HP realice su sustitución, puede o no conllevar costes adicionales, dependiendo del tipo de servicio de garantía correspondiente al producto.

[3]No: No—Algunos componentes no están diseñados para que puedan ser reparados por el usuario. Para que el usuario haga valer su garantía, HP pone como condición que un proveedor de servicios autorizado realice la sustitución de estos componentes. Dichos componentes se identifican con la palabra “No” en el catálogo ilustrado de componentes.

[1]Mandatory: Verplicht—Onderdelen waarvoor Customer Self Repair verplicht is. Als u HP verzoekt deze onderdelen te vervangen, komen de reiskosten en het arbeidsloon voor uw rekening.

[2]Optional: Optioneel—Onderdelen waarvoor reparatie door de klant optioneel is. Ook deze onderdelen zijn ontworpen voor reparatie door de klant. Als u echter HP verzoekt deze onderdelen voor u te vervangen, kunnen daarvoor extra kosten in rekening worden gebracht, afhankelijk van het type garantieservice voor het product.

[3]No: Nee—Sommige HP onderdelen zijn niet ontwikkeld voor reparatie door de klant. In verband met de garantievoorwaarden moet het onderdeel door een geautoriseerde Service Partner worden vervangen. Deze onderdelen worden in de geïllustreerde onderdelencatalogus aangemerkt met "Nee".

[1]Mandatory: Obrigatória—Peças cujo reparo feito pelo cliente é obrigatório. Se desejar que a HP substitua essas peças, serão cobradas as despesas de transporte e mão-de-obra do serviço.

[2]Optional: Opcional—Peças cujo reparo feito pelo cliente é opcional. Essas peças também são projetadas para o reparo feito pelo cliente. No entanto, se desejar que a HP as substitua, pode haver ou não a cobrança de taxa adicional, dependendo do tipo de serviço de garantia destinado ao produto.

[3]No: Nenhuma—Algumas peças da HP não são projetadas para o reparo feito pelo cliente. A fim de cumprir a garantia do cliente, a HP exige que um técnico autorizado substitua a peça. Essas peças estão identificadas com a marca “No” (Não), no catálogo de peças ilustrado.

[1]Mandatory：必須 - 顧客自己修理が必須の部品。当該部品について、もしもお客様がHPに交換作業を依頼される場合には、その修理サービスに関する交通費および人件費がお客様に請求されます。

[2]Optional：任意 - 顧客自己修理が任意である部品。この部品も顧客自己修理用です。当該部品について、もしもお客様がHPに交換作業を依頼される場合には、お買い上げの製品に適用される保証サービス内容の範囲内においては、費用を負担していただくことなく保証サービスを受けることができます。

[3]No：除外 - HP製品の一部の部品は、顧客自己修理用ではありません。製品の保証を継続するためには、HPまたはHP正規保守代理店による交換作業が必須となります。部品カタログには、当該部品が顧客自己修理除外品である旨が記載されています。

[1]Mandatory: 强制性的 — 要求客户必须自行维修的部件。如果您请求 HP 更换这些部件，则必须为该服务支付差旅费和人工费用。

[2]Optional: 可选的 — 客户可以选择是否自行维修的部件。这些部件也是为客户自行维修设计的。不过，如果您要求 HP 为您更换这些部件，则根据为您的产品指定的保修服务类型，HP 可能收取或不再收取任何附加费用。

[3]No: 否 — 某些 HP 部件的设计并未考虑客户自行维修。为了满足客户保修的需要，HP 要求授权服务提供商更换相关部件。这些部件在部件图解目录中标记为“否”。

[1]Mandatory: 強制的 — 客戶自行維修所使用的零件是強制性的。如果您要求 HP 更換這些零件，HP 將會向您收取此服務所需的外出費用與勞動成本。

[2]Optional: 選購的 — 客戶自行維修所使用的零件是選購的。這些零件也設計用於客戶自行維修之用。不過，如果您要求 HP 為您更換，則可能需要也可能不需要負擔額外的費用，端視針對此產品指定的保固服務類型而定。

[3]No: 否 — 某些 HP 零件沒有消費者可自行維修的設計。為符合客戶保固，HP 需要授權的服務供應商更換零件。這些零件在圖示的零件目錄中，被標示為「否」。

[1] Mandatory: 필수 — 고객 셀프 수리가 의무 사항인 필수 부품. 사용자가 HP에 이 부품의 교체를 요청할 경우 이 서비스에 대한 출장비 및 작업비가 청구됩니다.

[2] Optional: 옵션 — 고객 셀프 수리가 선택 사항인 부품. 이 부품들도 고객 셀프 수리가 가능하도록 설계되었습니다. 하지만 사용자가 HP에 이 부품의 교체를 요청할 경우 사용자가 구입한 제품에 해당하는 보증 서비스 유형에 따라 추가 비용 없이 교체가 가능할 수 있습니다.

[3] No: No — 고객 셀프 수리가 불가능하도록 설계된 HP 부품. 이 부품들은 고객 셀프 수리가 불가능하도록 설계되었습니다. HP는 고객 보증을 만족시키기 위해 공인 서비스 제공업체를 통해 부품을 교체하도록 하고 있습니다.

HP contact information

For United States and worldwide contact information, see the Contact HP website at http://hp.com/go/assistance.

In the United States:

- To contact HP by phone, call 1-800-334-5144. For continuous quality improvement, calls may be recorded or monitored.
- If you have purchased a Care Pack (service upgrade), see the Support & Drivers website at http://www8.hp.com/us/en/support-drivers.html. If the problem cannot be resolved at the website, call 1-800-633-3600. For more information about Care Packs, see the HP website at http://pro-aq-sama.houston.hp.com/services/cache/10950-0-0-225-121.html.

Before you contact HP

Be sure to have the following information available before you call HP:

- Technical support registration number (if applicable)
- Product serial number
- Product model name and number
- Applicable error messages
- Add-on boards or hardware
- Third-party hardware or software
- Operating system type and revision level

Removal and replacement procedures

This chapter provides subassembly/module-level removal and replacement procedures for the HP ProLiant SL170s G6 Server.

NOTE: Removal and replacement procedures images used in this chapter are based on the four SFF HDD configuration because most of the procedures between different drive configurations are the same. Review the specifications of a new component before installing it to make sure it is compatible with the server. When you integrate new components into the system, record its model and serial number, and any other pertinent information for future reference. After completing any removal or replacement procedure, run the diagnostics program to verify that all components operate properly.

NOTE: The figures used in this chapter to illustrate procedural steps are labeled numerically (i.e., 1, 2…). When these figures are used in substep items, the alphabetically labeled instructions correspond to the numbered labels on the related figure (i.e., label 1 corresponds to step a, label 2 corresponds to step b, etc.). The procedures described in this section assume that the server is out of the rack and is positioned on a flat, stable surface.

Hardware configuration tools

You need the following items for some procedures:

- T-10/T-15 wrench
- Flat-blade screwdriver

The following references and software tools may also be used:

- HP ProLiant SL170s G6 Server Easy Set-up CD
- IPMI Event Log
- Diagnostics Software

Hardware configuration information

Electrostatic discharge information

An electrostatic discharge (ESD) can damage static-sensitive devices or microcircuit. Proper packaging and grounding techniques are necessary precautions to prevent damage. To prevent electrostatic damage, observe the following precautions:

- Transport products in static-safe containers such as conductive tubes, bags, or boxes.
- Keep electrostatic-sensitive parts in their containers until they arrive at static-free stations.
- Cover workstations with approved static-dissipating material. Use a wrist strap connected to the work surface, and properly grounded (earthed) tools and equipment.
- Keep work area free of nonconductive materials, such as ordinary plastic assembly aids and foam packing.
- Make sure that you are always properly grounded (earthed) when touching a static-sensitive component or assembly.
- Avoid touching pins, leads, or circuitry.

- Always place drives with the Printed Circuit Board (PCB) assembly-side down.
- Use conductive field service tools.

Pre-installation procedure

Perform the steps below before you open the server or before you remove or replace any component.

WARNING: Failure to properly turn off the server before you open the server or before your start installing/removing components may cause serious damage as well as bodily harm.

1. Turn off the server and all the peripherals connected to it.
2. Unplug all cables from the power outlets to avoid exposure to high energy levels that may cause burns when parts are short-circuited by metal objects such as tools or jewelry.

   If necessary, label each one to expedite reassembly.
3. If server is installed in a rack, remove server and place it on a flat surface.
4. Disconnect telecommunication cables to avoid exposure to shock hazard from ringing voltages.
5. Remove the tray out according to the instructions described in in this chapter.
6. Follow the ESD precautions listed previously in this chapter when handling a server component.

IMPORTANT: To streamline the configuration process, read through the entire installation/removal procedure first and make sure you understand them before you begin.

Post-installation procedure

Observe the following items after installing or removing a server component:

1. Be sure all components are installed according to the described step-by-step instructions.
2. Check to make sure you have not left loose tools or parts inside the server.
3. Reinstall the PCI riser, peripherals, and system cables that you have removed.
4. Reinstall the server into the chassis.
5. Connect all external cables to the system.
6. Press the power button on the front panel to turn on the server.

Server warnings and cautions

Before installing a server, be sure that you understand the following warnings and cautions.

WARNING: To reduce the risk of electric shock or damage to the equipment:

- Do not disable the power cord grounding plug. The grounding plug is an important safety feature.
- Plug the power cord into a grounded (earthed) electrical outlet that is easily accessible at all times.
- Unplug the power cord from the power supply to disconnect power to the equipment.
- Do not route the power cord where it can be walked on or pinched by items placed against it. Pay particular attention to the plug, electrical outlet, and the point where the cord extends from the server.

WARNING: To reduce the risk of personal injury from hot surfaces, allow the drives and the internal system components to cool before touching them.

CAUTION: Do not operate the server for long periods with the access panel open or removed. Operating the server in this manner results in improper airflow and improper cooling that can lead to thermal damage.

CAUTION: The following rack-mount instructions shall be paid attention to.

- Elevated Operating Ambient - If installed in a closed or multi-unit rack assembly, the operating ambient temperature of the rack environment may be greater than room ambient. Therefore, consideration should be given to installing the equipment in an environment compatible with the maximum ambient temperature (Tma) specified by the manufacturer.
- Reduced Air Flow - Installation of the equipment in a rack should be such that the amount of air flow required for safe operation of the equipment is not compromised.
- Mechanical Loading - Mounting of the equipment in the rack should be such that a hazardous condition is not achieved due to uneven mechanical loading.
- Circuit Overloading - Consideration should be given to the connection of the equipment to the supply circuit and the effect that overloading of the circuits might have on overcurrent protection and supply wiring. Appropriate consideration of equipment nameplate ratings should be used when addressing this concern.
- Reliable Earthing - Reliable earthing of rack-mounted equipment should be maintained. Particular attention should be given to supply connections other than direct connections to the branch circuit (e.g. use of power strips)."

Symbols on equipment

The following symbols may be placed on equipment to indicate the presence of potentially hazardous conditions.



This symbol indicates the presence of hazardous energy circuits or electric shock hazards. Refer all servicing to qualified personnel.

To reduce the risk of injury from electric shock hazards, do not open this enclosure. Refer all maintenance, upgrades, and servicing to qualified personnel.



This symbol indicates the presence of electric shock hazards. The area contains no user or field serviceable parts. Do not open for any reason.

To reduce the risk of injury from electric shock hazards, do not open this enclosure.



This symbol on an RJ-45 receptacle indicates a network interface connection.

To reduce the risk of electric shock, fire, or damage to the equipment, do not plug telephone or telecommunications connectors into this receptacle.

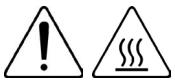

This symbol indicates the presence of a hot surface or hot component. If this surface is contacted, the potential for injury exists.

To reduce the risk of injury from a hot component, allow the surface to cool before touching.



This symbol indicates that the component exceeds the recommended weight for one individual to handle safely.

To reduce the risk of personal injury or damage to the equipment, observe local occupational health and safety requirements and guidelines for manual material handling.



These symbols, on power supplies or systems, indicate that the equipment is supplied by multiple sources of power.

To reduce the risk of injury from electric shock, remove all power cords to completely disconnect power from the system.

Powering down the server

The server does not completely power down when the power button on the front panel is pressed. The button toggles between On and Standby. The standby position removes power from most electronics and the drives, but some internal circuitry remains active. To completely remove all power from the system, disconnect all power cords from the back of the chassis.

To power down the server:

1. Shut down server as directed by the operating system documentation.
2. Press the power button to toggle to Standby.

   This places the server in standby mode changing the power LED indicator to amber. In this mode, the main power supply output is disabled. Standby does not completely disable or remove power from the system.
3. Be sure that the power LED indicator is turned off and that the fan noise has stopped.
4. Disconnect all external peripheral devices from the server.

System tray removal and replacement procedures

The system tray is removable for server component removal and replacement.

To remove the system tray:

1. Release the handle.
2. Extend the server from the chassis until the release latch catches.
3. Firmly holding the server, press the release button.
4. Remove the server from the chassis.
5. Install the server blank in the server slot.

Figure 1 Removing the left server tray

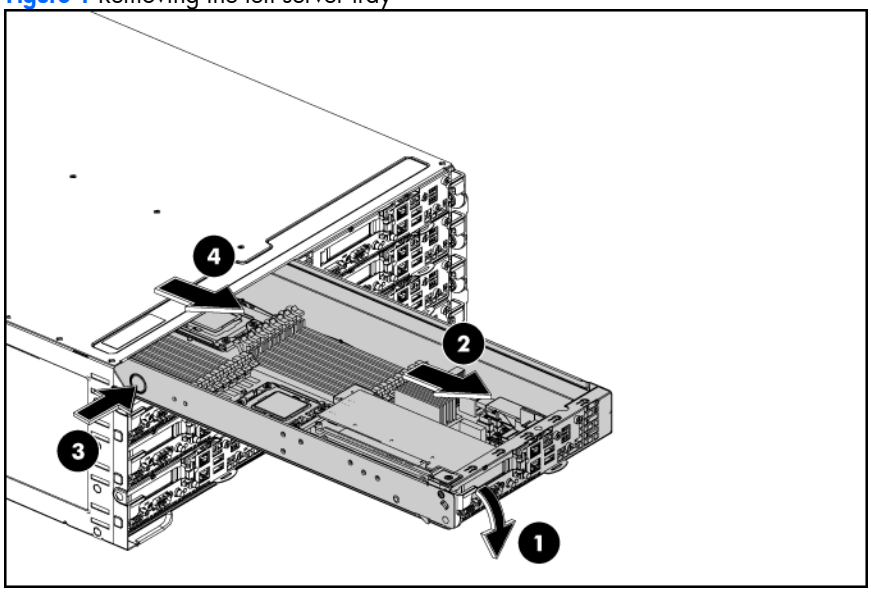

Figure 2 Removing the right server tray

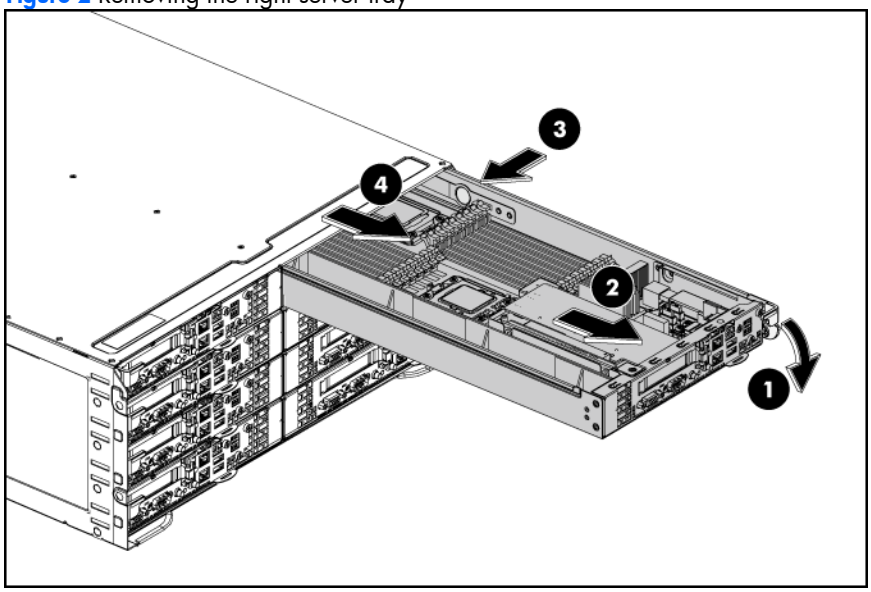

To replace the system tray:

Insert the system tray into the chassis.

Figure 3 Installing the left server tray

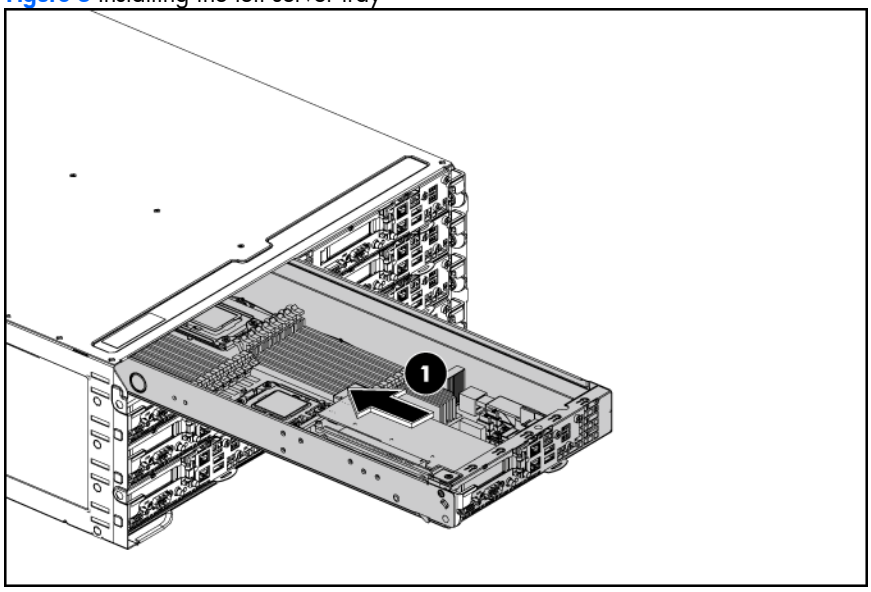

Figure 4 Installing the right server tray

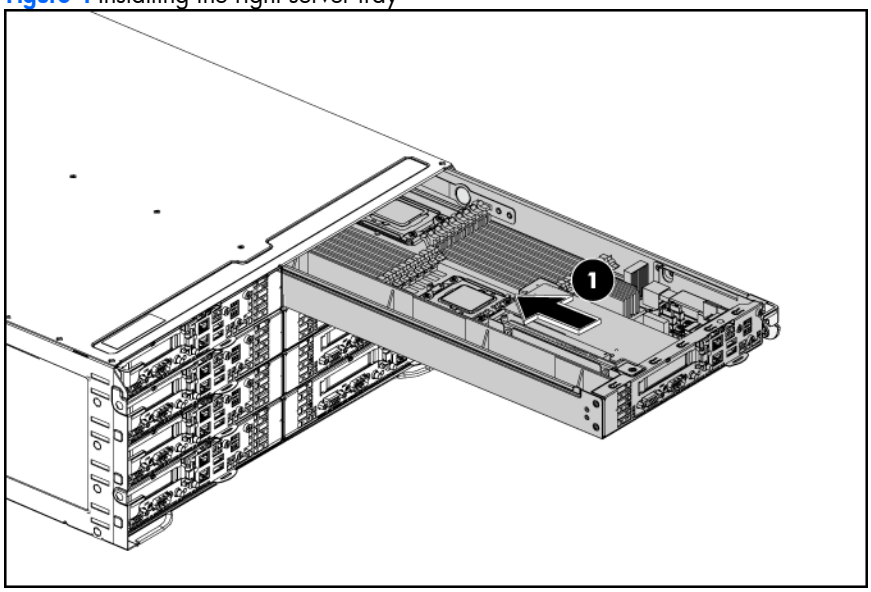

Cable management

Always follow good cable management practices when working inside the computer.

- Keep cables away from major heat sources like the heatsink.
- Do not jam cables on top of expansion cards or memory modules. Printed circuit cards are not designed to withstand excessive pressure.
- Keep cables clear of sliding or moveable parts to prevent cutting or crimping.
- When folding a flat ribbon cable, never fold to a sharp crease. Sharp creases may damage the wires.
- Some flat ribbon cables come pre-folded. Never change the folds on these cables.
- Do not sharply bend any cable. A sharp bend can break the internal wires.

- Never bend a SATA data cable tighter than a 30 mm (1.18 in) radius.
- Never crease a SATA data cable.
- Do not rely on components like the drive cage, power supply, or system cover to push cables down into the chassis.

Removing power supply cables from the system board connectors (J36):

1. Squeeze the top of the retaining latch attached to the cable end of the connector.
2. Grasp the cable end of the connector and pull it straight up.

CAUTION: Always pull the connector - NEVER pull on the cable. Pulling on the cable could damage the cable and result in a failed power supply.

Figure 5 Unplugging power cables

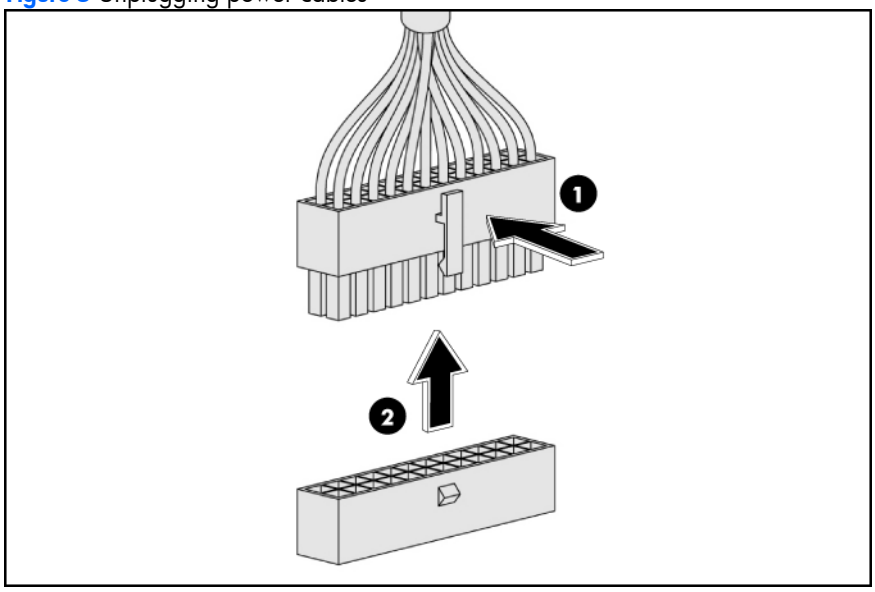

Cable connections

The following table provides information about cable connector.

Table 1 SATA cable connections (left/right tray)

System board SATA connector designator	SATA cable	Personality board SATA connector designator
J32	HDD1	P0
J9	HDD2	P1
J18	HDD3	P2
J19	HDD4	P3

Table 2 Power cable connections

Cable	From	To
Power convert cable (left tray)	J36 on the system board	J2 on the personality board
Power convert cable (right tray)	J36 on the system board	J2 on the personality board

Table 3 RPS cable connections

Cable	From	To
RPS cable (left tray)	J42 on the system board	J3 on the personality board
RPS cable (right tray)	J42 on the system board	J3 on the personality board

Hard drives

Each chassis can accommodate eight server trays (four left trays and four right trays). Each server tray can accommodate up to two LFF or four SFF hard disk drives for a drive capacity of up to 16 LFF or 32 SFF hard disk drives per chassis. The server supports both SAS and SATA hard disk drives.

Figure 6 LFF hard drive locations

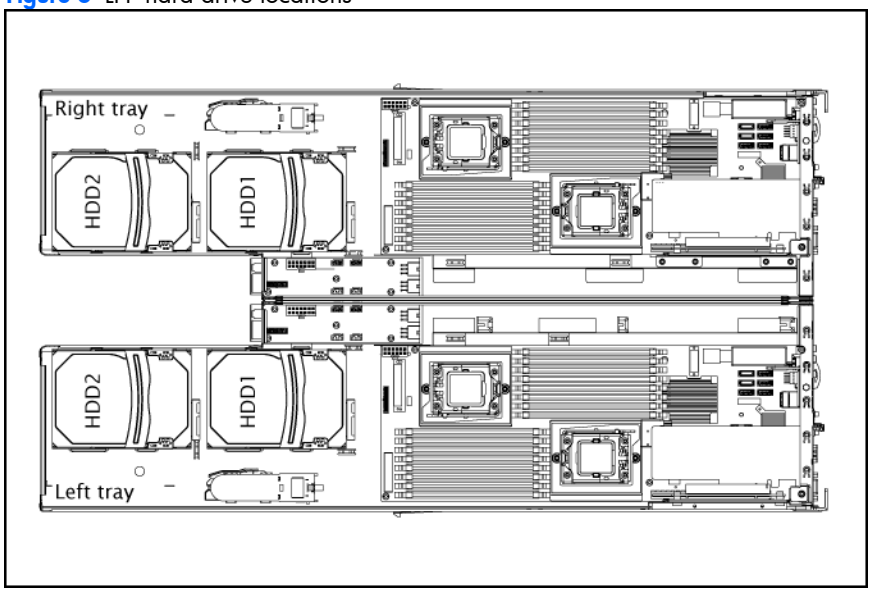

Item	Description
1	LFF hard drive 1
2	LFF hard drive 2

Figure 7 SFF hard drive locations

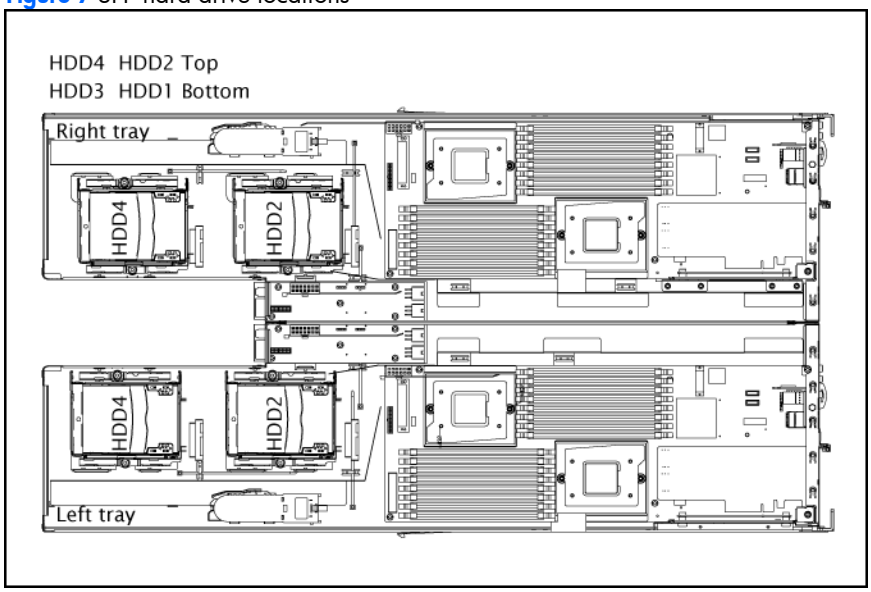

Item	Description
1	SFF hard drive 1 (under hard drive 2)
2	SFF hard drive 2
3	SFF hard drive 3 (under hard drive 4)
4	SFF hard drive 4

NOTE: The following section introduces the LFF hard disk drive installation and removal. See the *HP SFF Enablement Kit Installation Instructions* for more details on SFF hard disk drive installation.

To remove a LFF hard drive:

1. Slide the HDD carrier latches to unlock the HDD handle.
2. Raise the HDD handle.
3. Lift the HDD assembly out of the tray.
4. Rotate the HDD carrier handle down and then lock the HDD carrier latches.

Figure 8 Removing the hard drive

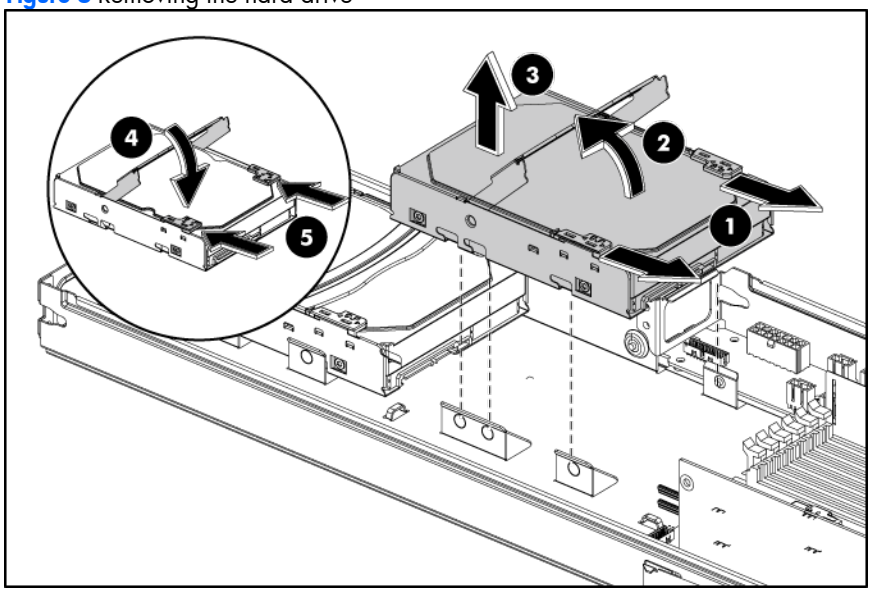

To install a LFF hard drive:

1. Unlock the HDD carrier latch.
2. Rotate the HDD carrier handle up.
3. Insert the HDD carrier and align the four pins.
4. Rotate the HDD carrier handle down and then lock the HDD carrier latches.

Figure 9 Installing a hard drive

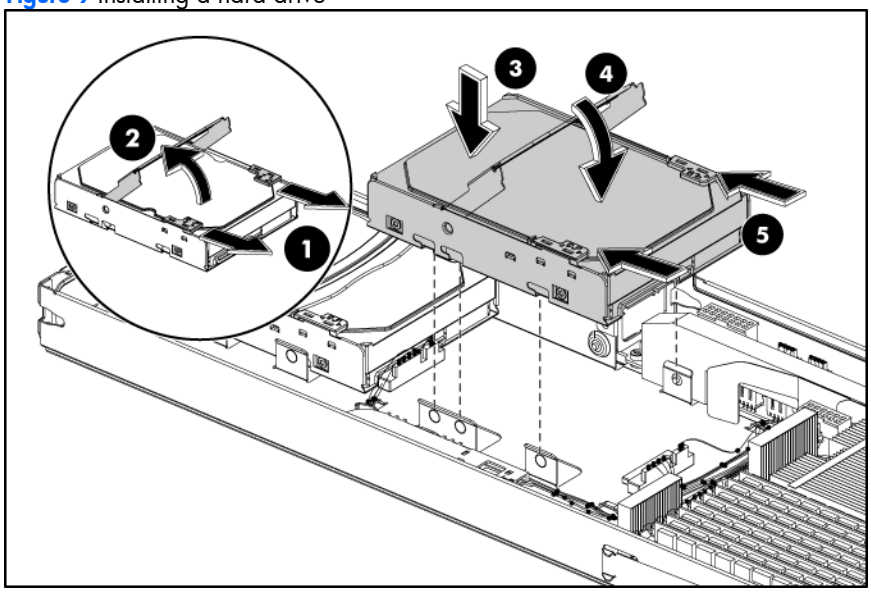

IMPORTANT: Do not discard the hard drive blank. If the drive is removed in the future, you must reinstall the hard drive blank to maintain proper system airflow.

Personality board

To remove the personality board:

1. Unfasten the screws that secure the personality board to the chassis.
2. Remove the personality board.

Figure 10 Removing the personality board

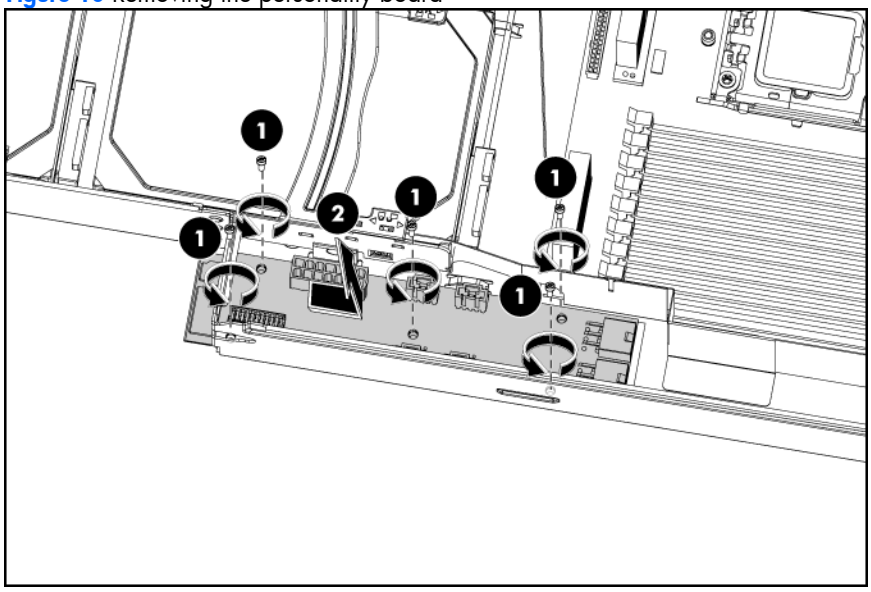

To install the personality board:

1. Install the personality board in the chassis.
2. Fasten the screws.

Figure 11 Installing the personality board

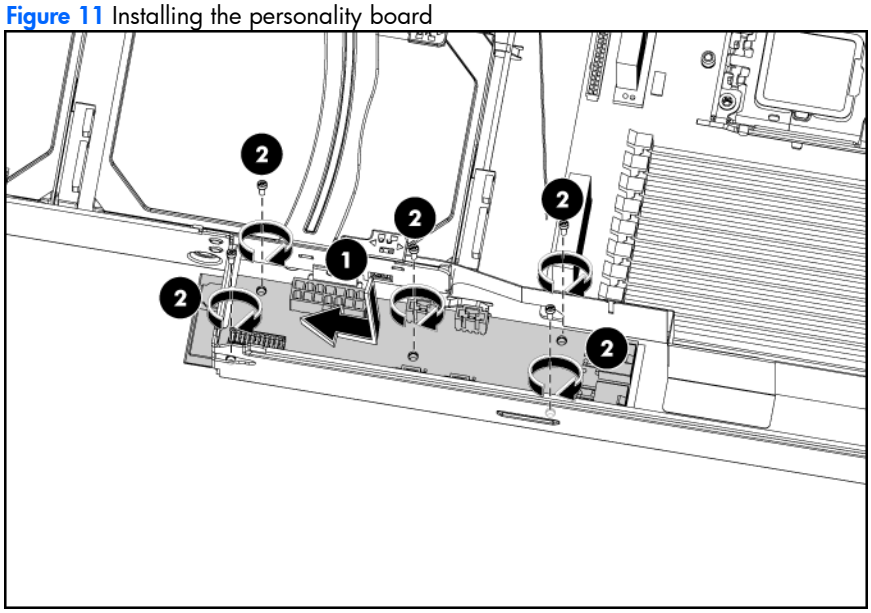

System board configuration

Processor

The HP ProLiant SL170s G6 Server, with eight nodes, supports sixteen-processor operation. With two processors installed, each node supports boot functions through the processor installed in processor socket 1. However, if processor 1 fails, the system automatically boots from processor 2 and provides a processor failure message.

The processor socket supports six-core Intel Westmere EP Series processors.

CAUTION: HP recommends using processors of the same speeds or cache sizes to prevent possible server malfunction.

Figure 12 Processor locations

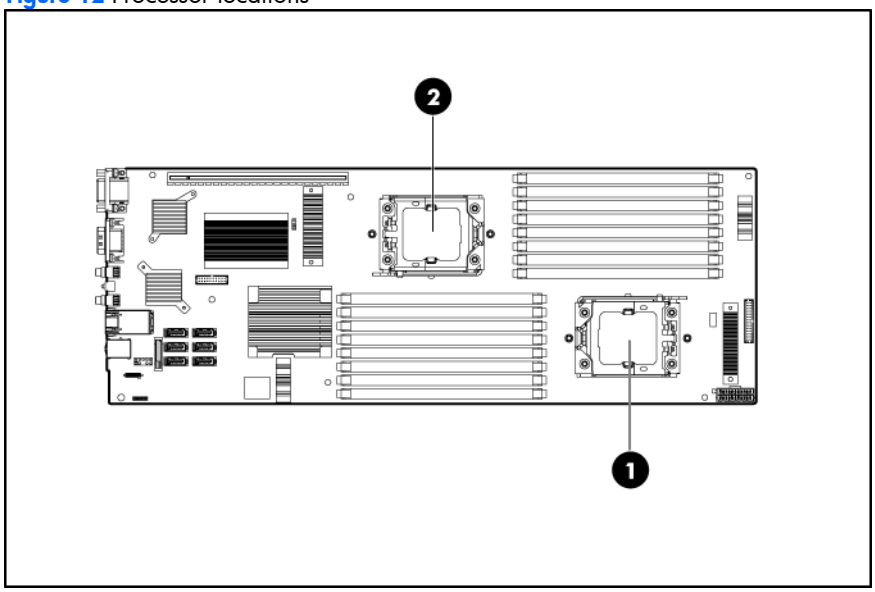

Item	Description
1	Processor 1
2	Processor 2

WARNING: To reduce the risk of personal injury from hot surfaces, allow the heatsink and the processor to cool before touching them.

To remove the heatsink:

CAUTION: Heatsink screws should be tightened and loosened in opposite sequence. Do not overtighten the screws as this can damage the system board, connectors, or screws. A maximum torque of 6-8 in-lb is set for the system.

CAUTION: Place the heatsink down in an upright position with the thermal patch facing upward. Do not let the thermal patch touch the work surface.

1. Loosen the first screw about three quarters out, then loosen the second screw completely.
2. Completely loosen the first screw.

3. Lift the heatsink away from the system board.

Figure 13 Removing the heatsink

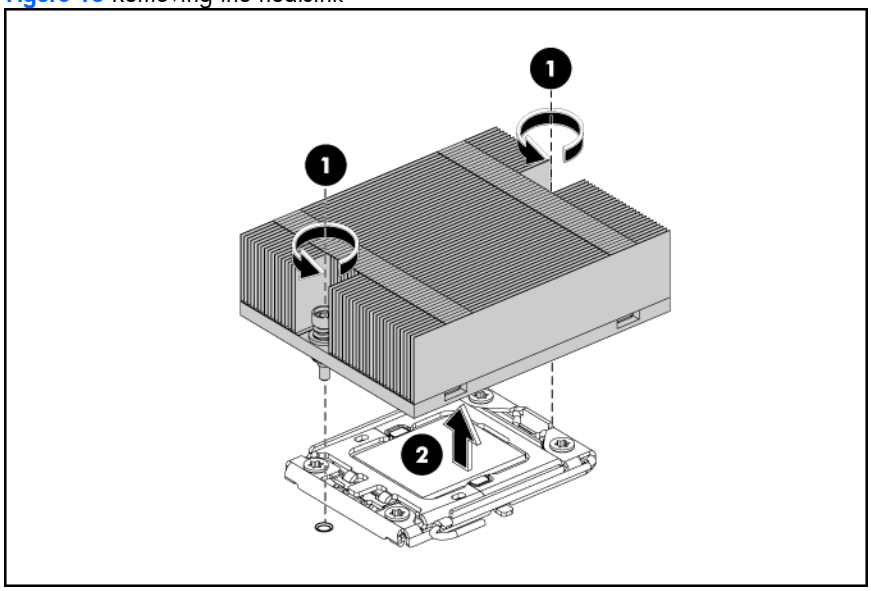

IMPORTANT: If the heatsink has been removed for any reason on a previously installed processor, it is critical that you apply more thermal interface material to the integrated heat spreader on the processor to ensure proper thermal bonding between the processor and the heatsink.

To remove a processor:

1. Open the processor locking lever and the processor socket retaining bracket.

Figure 14 Opening the processor socket retaining bracket

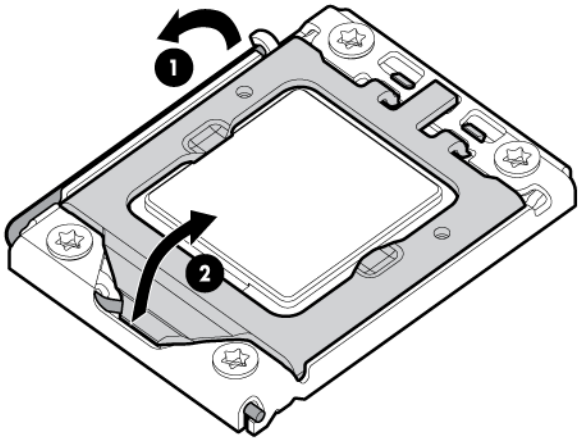

2. Using the processor removal tool, remove the processor from the system board:
   a. Line up the processor tool, ensuring the locking lever graphic on the tool is correctly oriented.
   b. Press in on the plastic tabs, and then place the tool on the processor.
   c. Release the tabs, and then carefully lift the processor and tool straight up.

Figure 15 Removing a processor

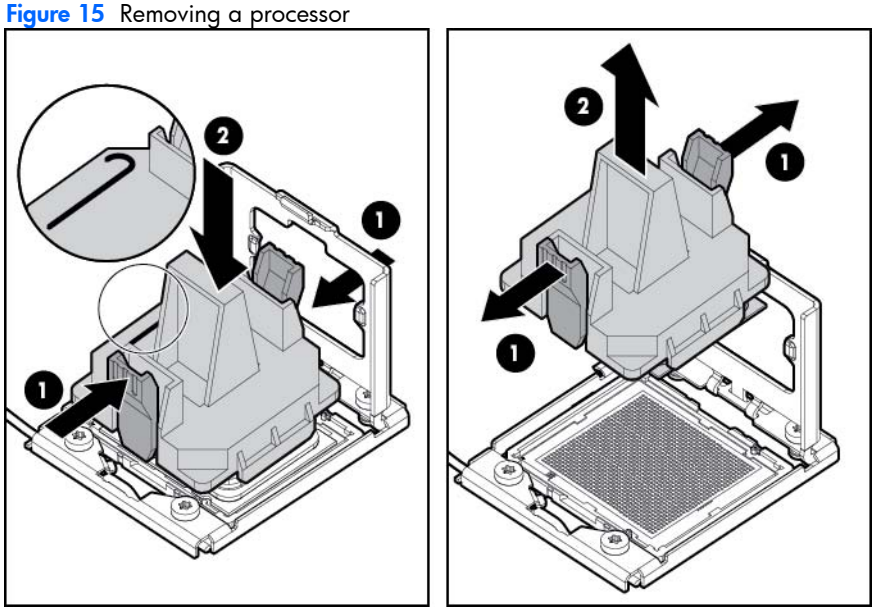

3. Carefully rotate the tool, and then push in and release the tabs to secure the processor in the tool.

Figure 16 Securing a processor

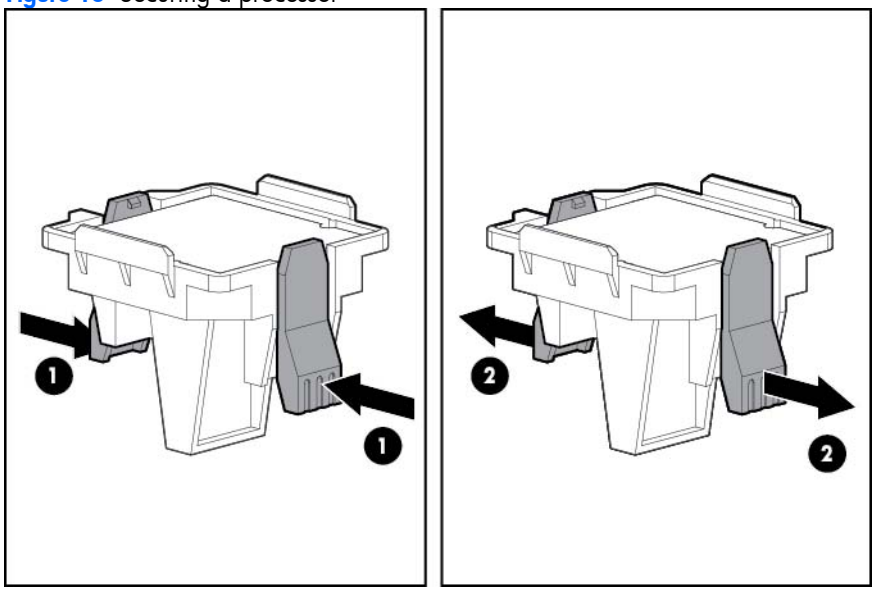

CAUTION: To avoid damage to the processor, do not touch the bottom of the processor, especially the contact area.

To install a new processor:

1. Carefully insert the processor into the processor installation tool. Handle the processor by the edges only, and do not touch the bottom of the processor, especially the contact area.

Figure 17 Inserting a processor

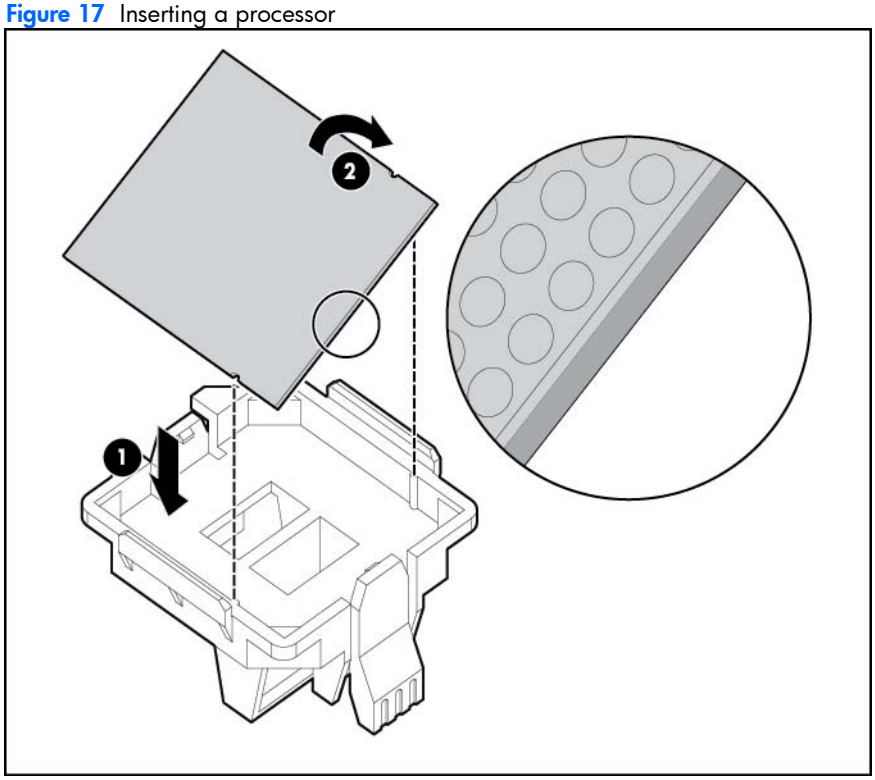

2. Be sure the tool is oriented correctly. Align the processor installation tool with the socket, and then install the processor. **THE PINS ON THE SYSTEM BOARD ARE VERY FRAGILE AND EASILY DAMAGED.**

Figure 18 Installing a processor

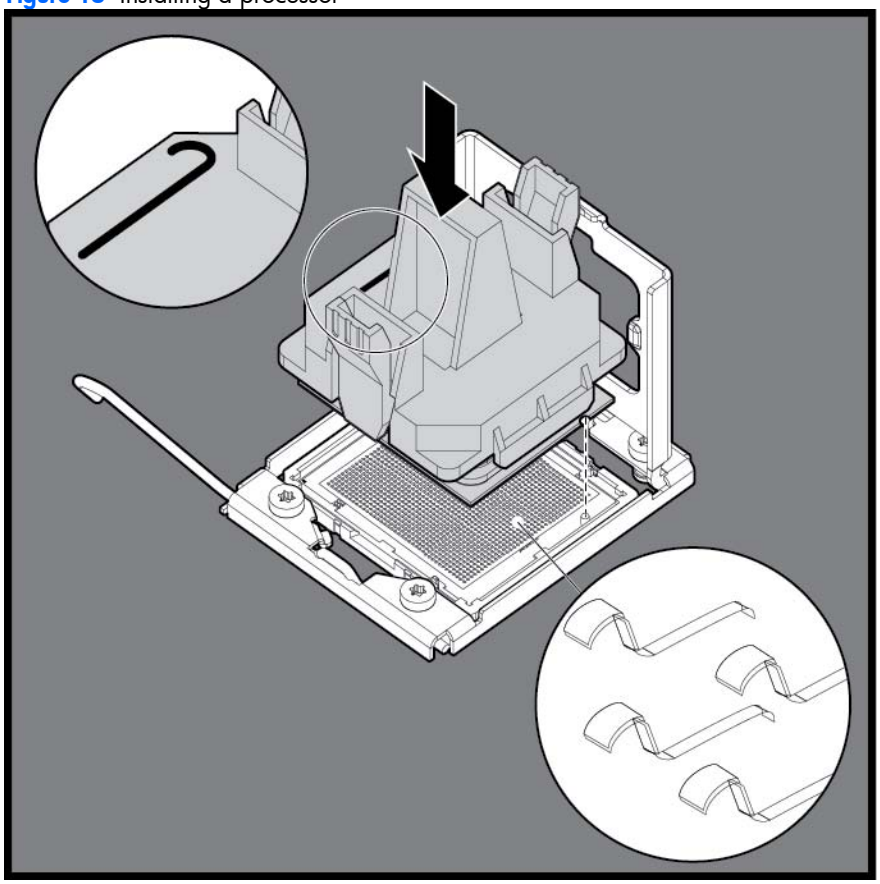

△ **CAUTION: THE PINS ON THE SYSTEM BOARD ARE VERY FRAGILE AND EASILY DAMAGED.** To avoid damage to the system board:

- Never install or remove a processor without using the processor installation tool.
- Do not touch the processor socket contacts.
- Do not tilt or slide the processor when lowering the processor into the socket.

3. Press and hold the tabs on the processor installation tool to separate it from the processor, and then remove the tool.

Figure 19 Removing the processor installation tool

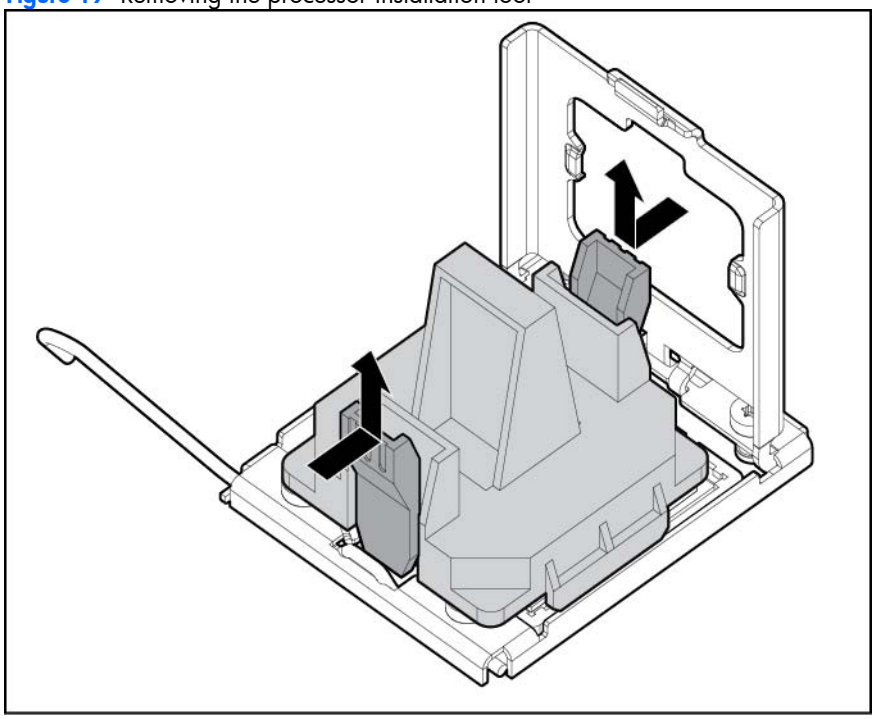

4. Close the processor socket retaining bracket and the processor locking lever.

CAUTION: Be sure to close the processor socket retaining bracket before closing the processor locking lever. The lever should close without resistance. Forcing the lever closed can damage the processor and socket, requiring system board replacement.

Figure 20 Closing the processor socket retaining bracket

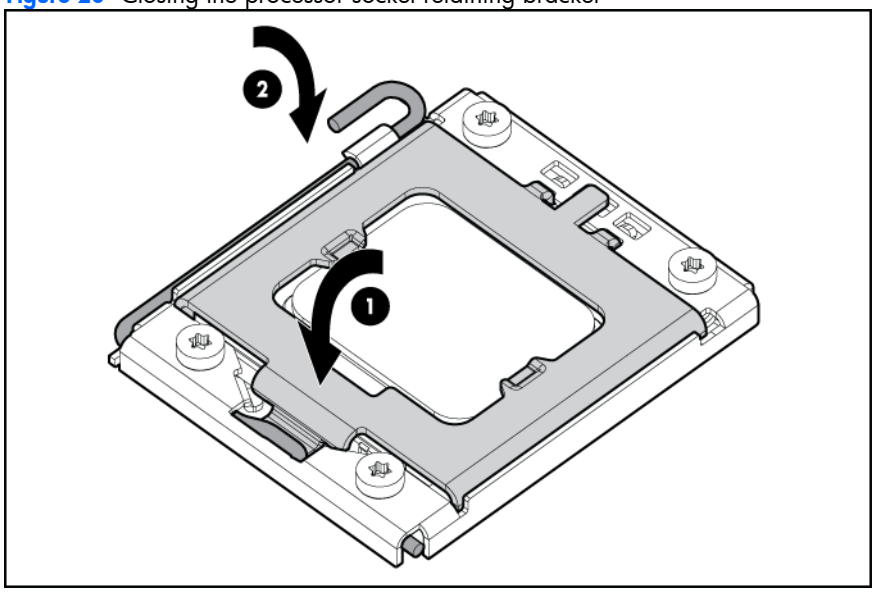

CAUTION: To allow heatsink to draw as much heat as possible from the processor base, there must be good contact between the heatsink base and the top of the processor. To ensure good contact, you must apply thermal interface material.

To apply the thermal grease compound:

1. Use the alcohol pad provided in the spare part kits or a clean cloth dipped in rubbing alcohol to clean the contact surface on the heatsink and on the new processor. Wipe the contact surfaces several times to make sure that no particles or dust contaminants are evident.
2. Apply all the grease to the top of the processor in the following pattern to ensure even distribution.

Figure 21 Processor thermal grease pattern

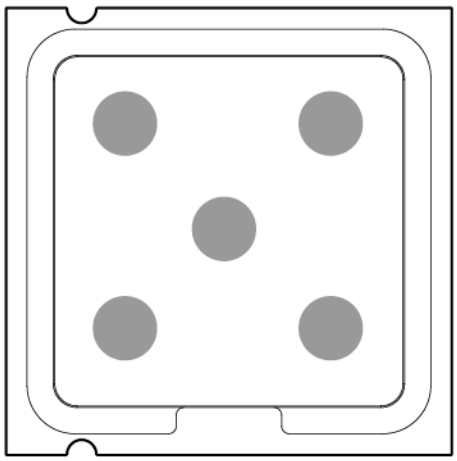

CAUTION: HP recommends using Shin-Etsu X-23-7783D thermal grease compound for your ProLiant server.

CAUTION: Never touch the bottom of the processor; any contaminant could prevent the mounting pads from making contact with the socket.

CAUTION: Applying too much grease creates a gap between the contact surfaces, significantly reducing the ability of the heatsink to draw out heat. Installing the heatsink with excessive grease can also cause the grease to spread over the processor pins or the system board base, which can cause electrical shorts that damage the system.

To install the heatsink:

CAUTION: To prevent overheating or a possible system crash, use only a heatsink model specified for the HP ProLiant SL170s G6 Server.

CAUTION: Heatsink screws should be tightened and loosened in opposite sequence. Do not overtighten the screws as this can damage the system board, connectors, or screws. A maximum torque of 6-8 in-lb is set for the system.

1. Position the heatsink on the processor backplate.
2. Tighten the first screw about three quarters in, then tighten the second screw completely.
3. Completely tighten the first screw.

Figure 22 Installing the heatsink

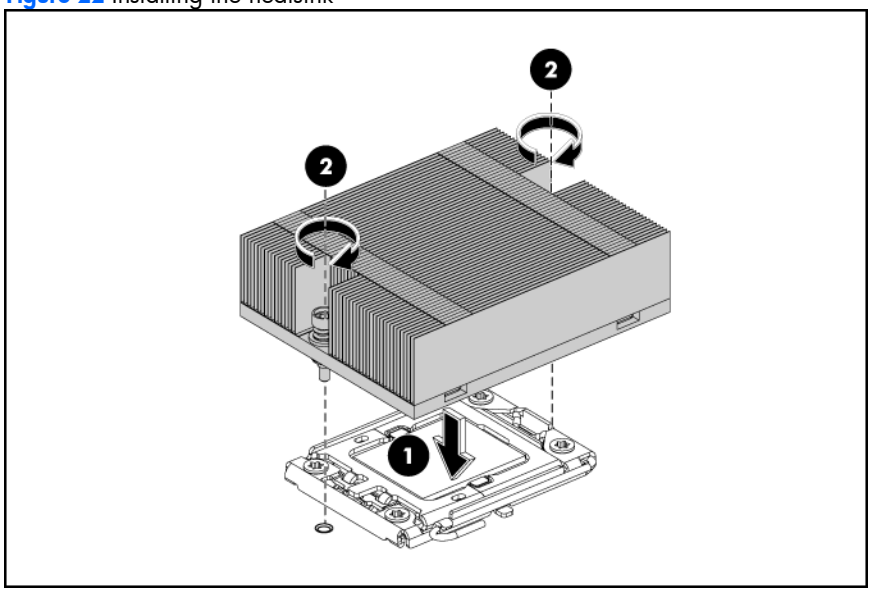

Memory

HP ProLiant SL170s G6 Server has 16 DIMM slots that supports up to 192 GB maximum system memory.

You must adhere to the following guidelines when adding or replacing memory modules:

- For 2P system, both physical processors in each mode must be of the same type and speed.
- Use 800/1066/1333 MHz Registered/Unbuffered ECC DDR3 Memory.
- Supported DIMM: 1GB, 2GB, 4GB 8GB and 16GB (192GB maximum capacity) DDR3.

Figure 23 DIMM slots population order

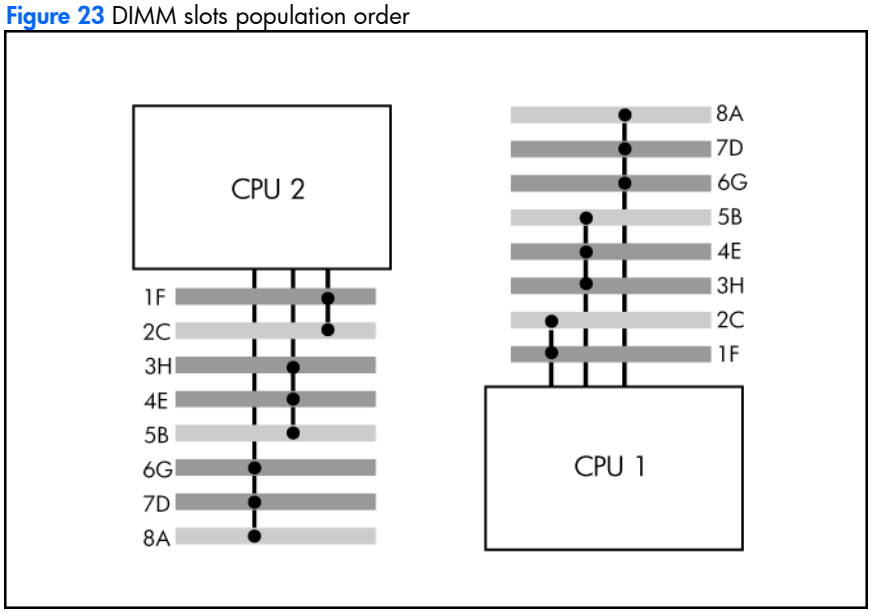

To remove a memory module:

1. Completely open the holding clips securing the module.
2. Gently pull the memory module upward to remove it from the slot.

Figure 24 Removing a memory module

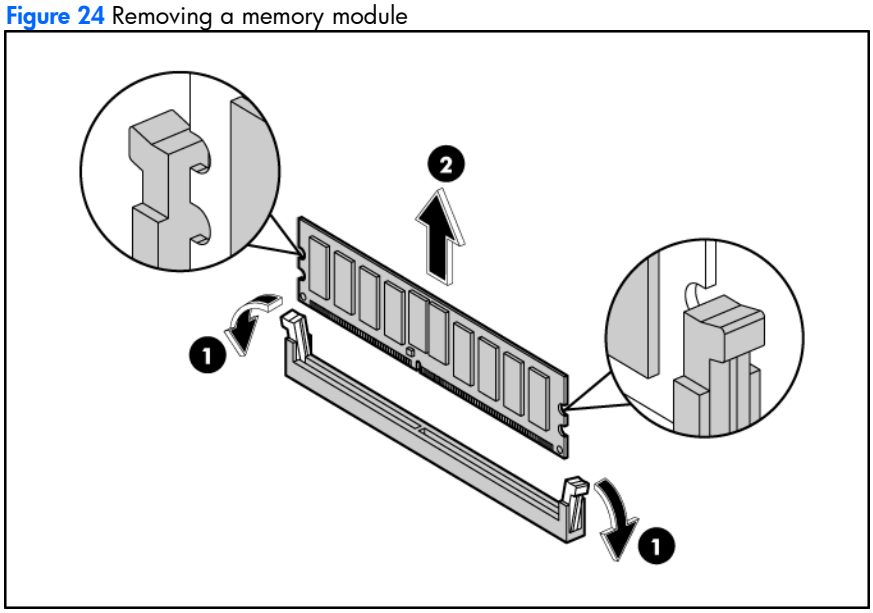

△ **CAUTION:** Place the memory module on a static-dissipating work surface or inside of an anti-static bag.

To install a memory module:

1. Align the notch on the bottom edge of the module with the keyed surface of the DIMM slot and then press the module fully into the slot.
2. Firmly press the holding clips inward to secure the memory module in place.

Figure 25 Installing a memory module

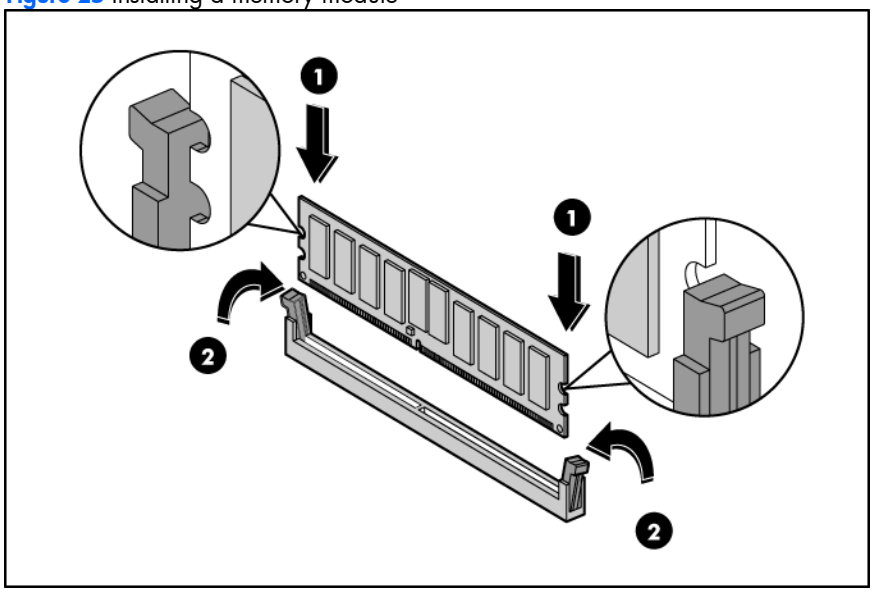

The memory slots are structured to ensure proper installation. If you insert a memory module but it does not fit easily into the slot, you may have inserted it incorrectly. Double-check the orientation of the module and reinsert. If the holding clips do not close, the module is not inserted correctly.

IPMI card

To remove the IPMI card:

1 Loosen the screws that secure the IPMI card to the front panel.

2 Loosen the screws that secure the system board to the tray.

3 Pull the IPMI card up to release it from the connector.

4 Fasten the screw back to secure the system board to the tray after removing the IPMI card.

Figure 26 Removing the IPMI card

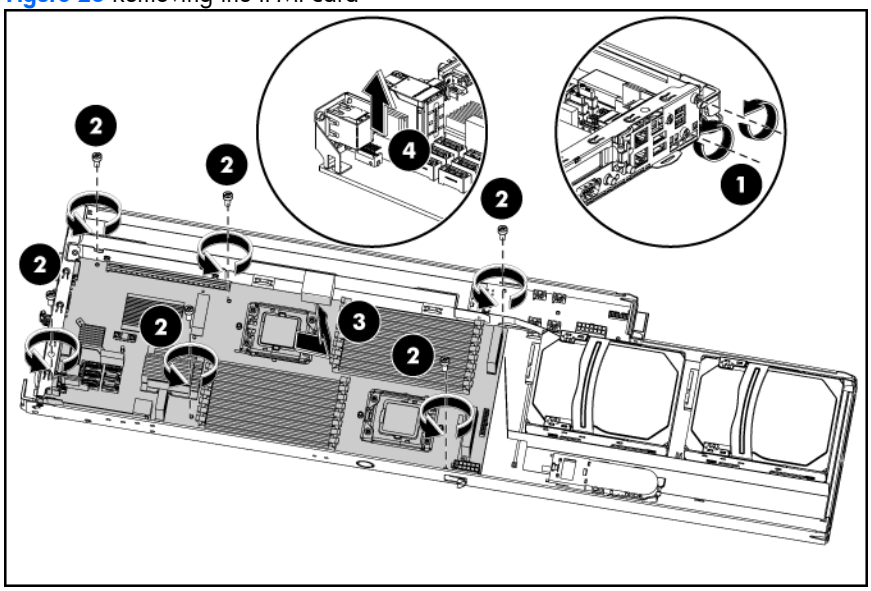

To install the IPMI card:

1. Loosen the screws that secure the system board to the tray.
2. Align the IPMI card with the open expansion slot and press the IPMI card straight down into the expansion connector on the system board.
3. Fasten the screws back to secure the system board and IPMI card to the tray.

Figure 27 Installing the IPMI card

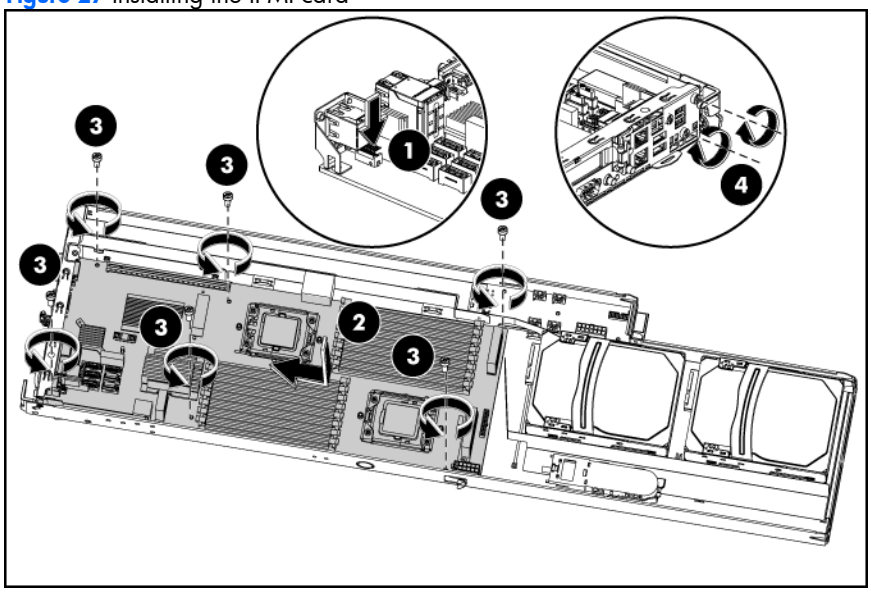

System battery

The server uses nonvolatile memory that requires one battery to retain system information when power is removed.

This 3-volt lithium coin cell battery is located on the system board.

Figure 28 System battery location

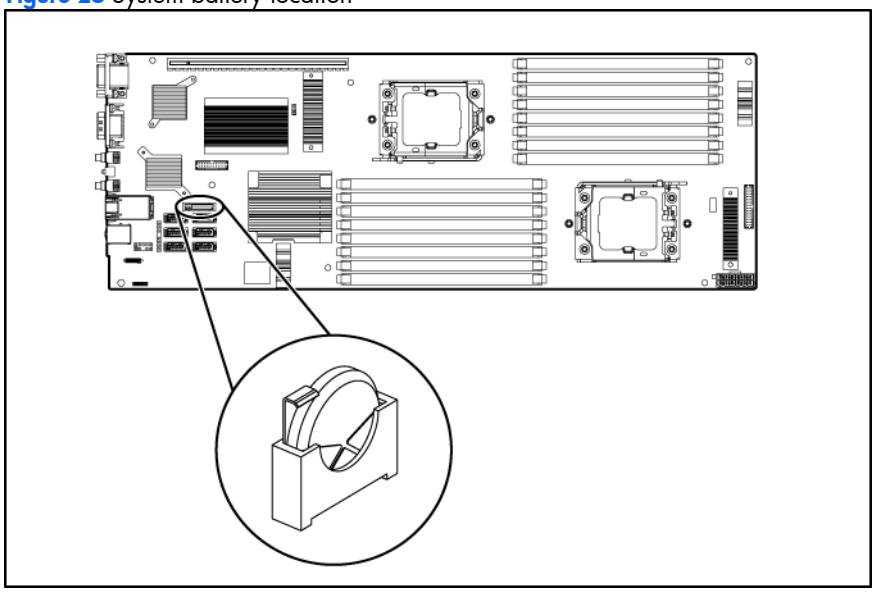

WARNING: Note the following reminders when replacing the system battery:

- Replace the battery with the same type as the battery recommended by HP. Use of another battery may present a risk of fire or explosion.
- A risk of fire and chemical burn exists if the battery is not handled properly. Do not disassemble, crush, puncture, or short external contacts, or expose the battery to temperatures higher than 60°C (140°F).
- Do not dispose of used battery in water or fire. Dispose of used batteries according to manufacturer's instructions.

CAUTION: Loss of BIOS settings occurs when the battery is removed. You must reconfigure BIOS settings whenever you replace the battery.

NOTE: If the server no longer automatically displays the correct date and time, you may need to replace the system battery. Under normal usage, battery life is five to ten years.

To replace the system battery:

1. Release the battery from its holder; squeeze the metal clamp that extends above top of the battery. When the battery pops up, lift it out.
2. Insert the new battery, slide one edge of the replacement battery under the holder's lip with the positive side facing the metal clamp. Push the other edge down until the clamp snaps over the top of the battery.

Figure 29 Replacing the battery

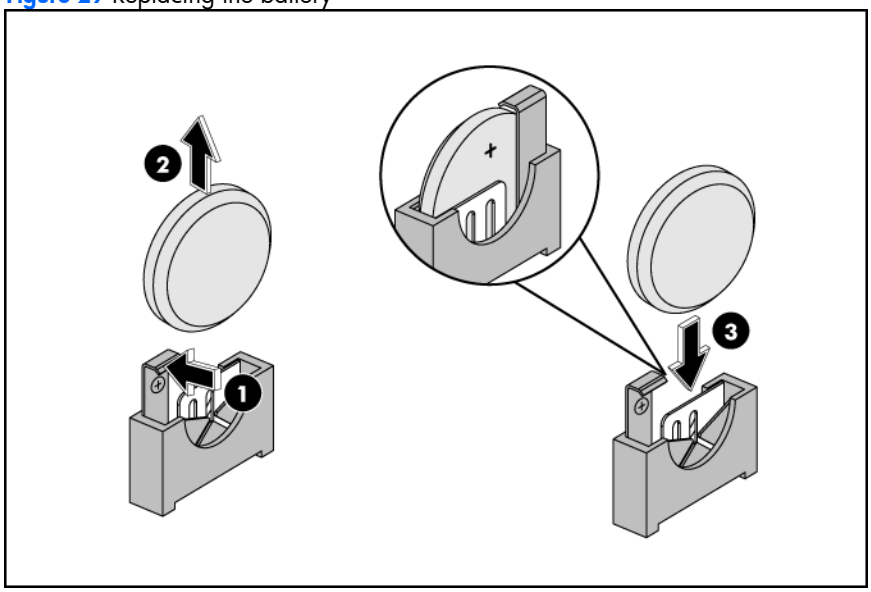

System board removal and replacement procedure

To remove the system board:

NOTE: The system board spare part kit does not contain processors or DIMMs. These have to be moved from the defective board and installed on the new board. Follow directions on the removal and replacement of these parts.

1. Remove the six screws that secure the system board to the tray.
2. Release the system board from the tray.

Figure 30 Removing the system board

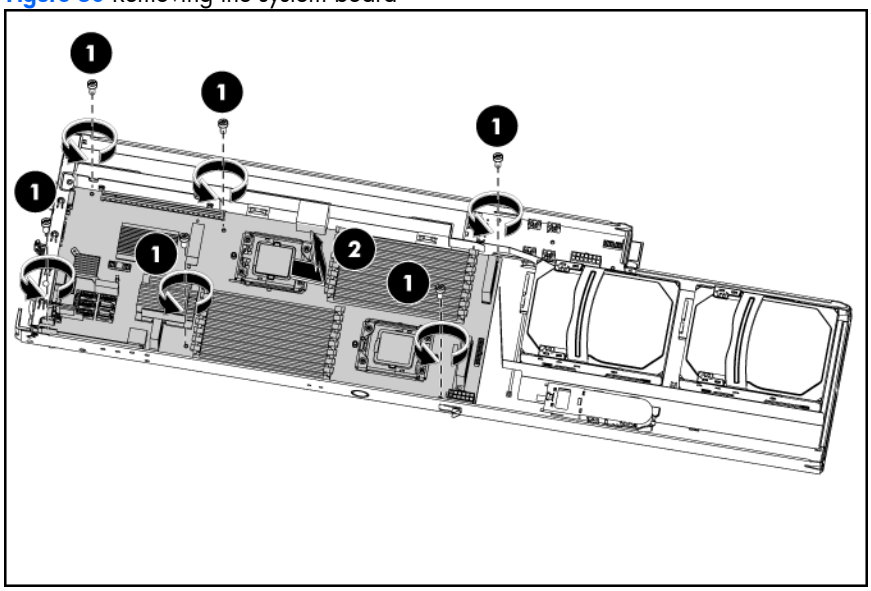

IMPORTANT: Do not discard the screws. If the system board is removed in the future, you must keep them for future use.

To replace the system board:

1. Put the system board in the tray. The screw holes on the tray should align with the holes on the system board.
2. Fasten the screws to secure the system board to the tray.

Figure 31 Installing the system board

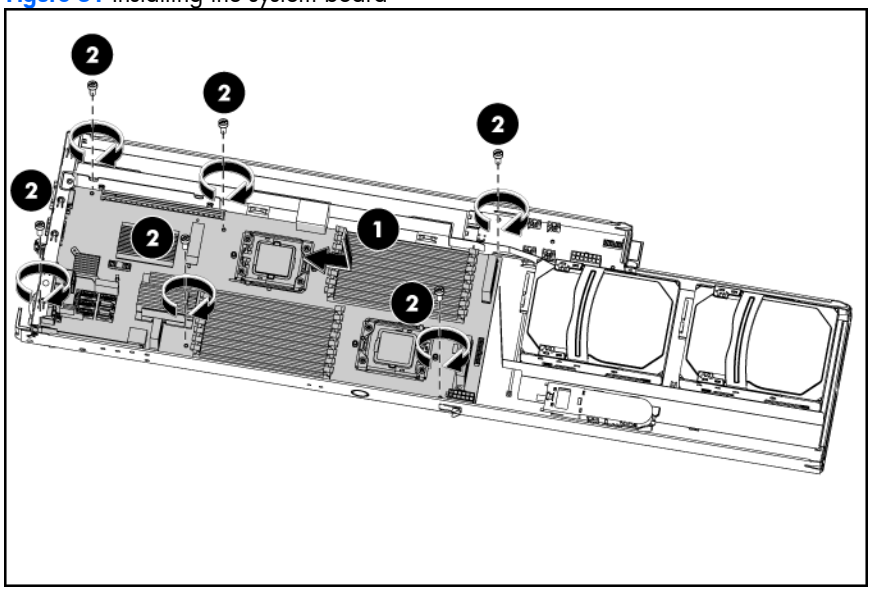

NOTE: It is important to ensure the System Serial Number is updated to the original Serial Number after replacing the system board. See the "Navigating through the Setup Utility" section on page 61 to input the correct System Serial Number and Asset Tag information. Also, you can input all the other customer specific setup requirements that are required.

Power supply unit (PSU)

Located on the rear panel of the server power supply is a standard ranging 750 watt or 1200 watt PSU with PFC (power factor correction) function.

NOTE: Power supplies with different wattage cannot be mixed in the same chassis.

Figure 32 Power supply unit

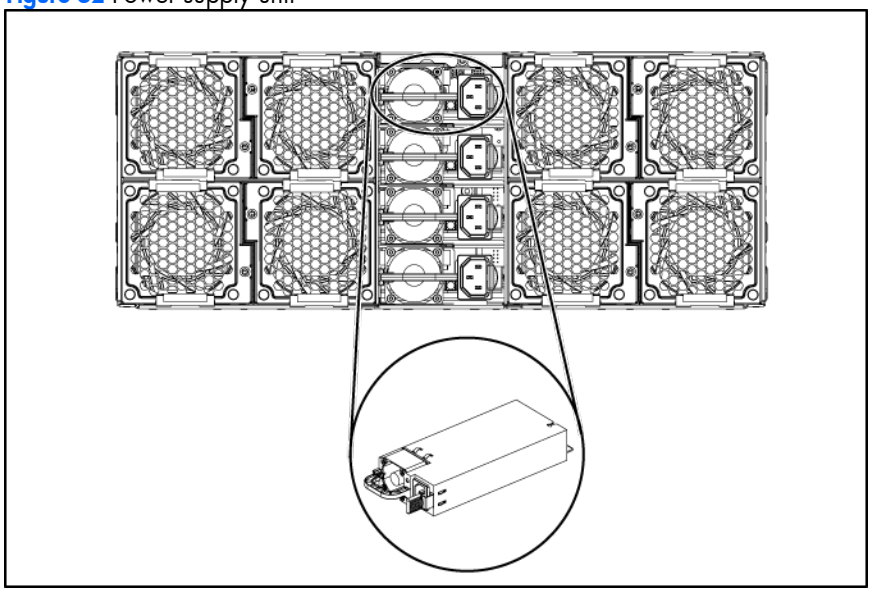

WARNING: Take note of the following reminders to reduce the risk of personal injury from electric shock hazards and/or damage to the equipment.

- Installation of power supply units should be referred to individuals who are qualified to service server systems and are trained to deal with equipment capable of generating hazardous energy levels.
- DO NOT open the power supply unit. There are no serviceable parts inside it.

To remove the PSU backplane:

IMPORTANT: Make sure all the nodes, blanks, and power supplies are removed before removing or replacing the PSU backplane.

1. Remove the top cover from the power supply cage (steps 1, 2).
2. Disconnect all cables from the PSU backplane.
3. Remove the PSU backplane (step 3).
4. Reinstall the top cover to the power supply cage (steps 4, 5).

Figure 33 Removing the PSU backplane

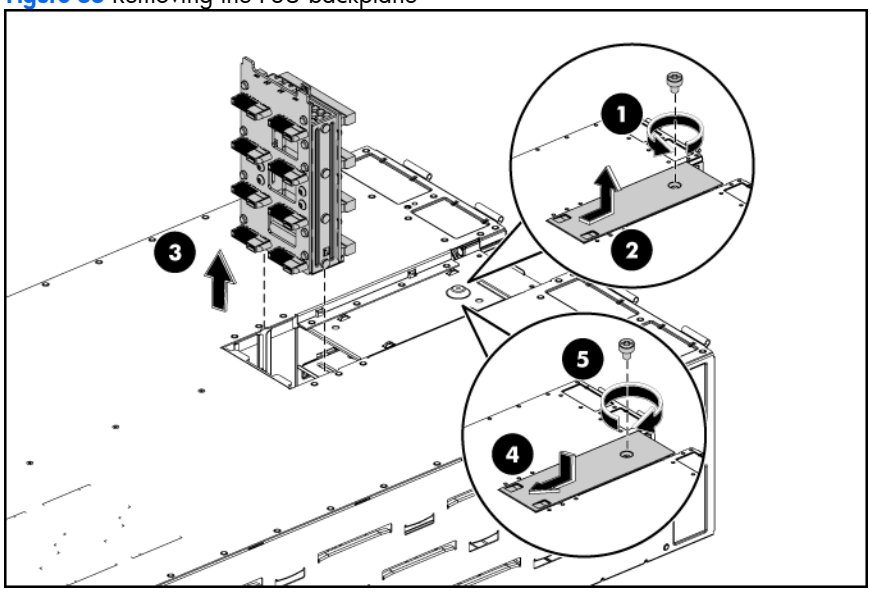

To remove the power supply:

1. Press the port colored button on the power supply latch.
2. Slide the power supply out of the power supply bay.

Figure 34 Removing the power supply

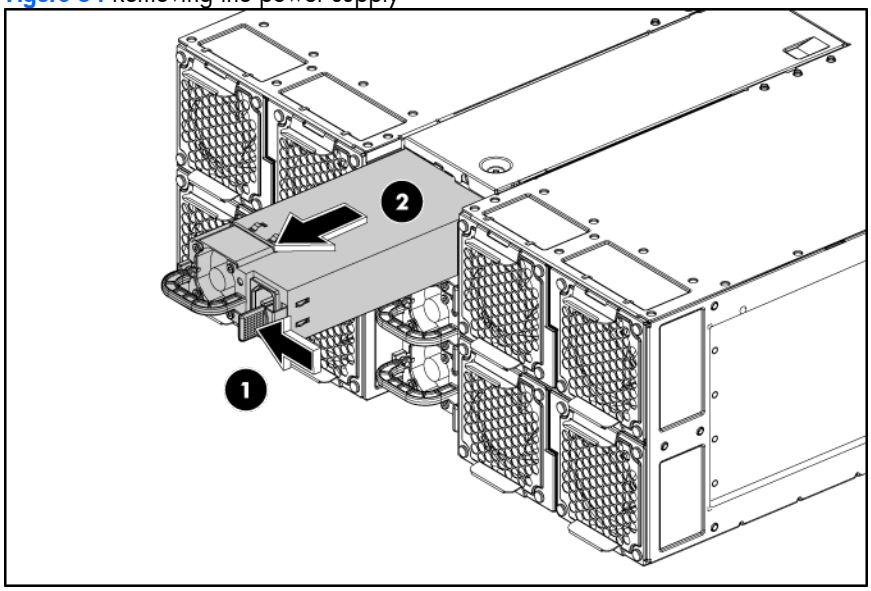

To replace the PSU backplane:

1. Remove the top cover from the power supply cage (steps 1, 2).
2. Install the PSU backplane (step 3).
3. Connect all cables to the PSU backplane.
4. Reinstall the top cover to the power supply cage (steps 4, 5).

Figure 35 Installing the PSU backplane

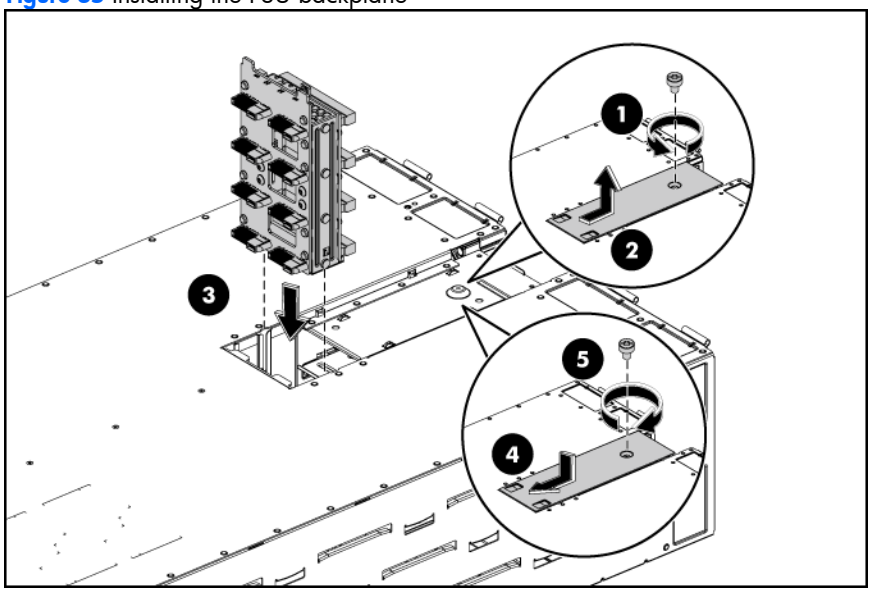

To replace the power supply:

1. Align the power supply edge card connector with the open slot of power supply cage.
2. Slide the power supply into the power supply bay until it snaps into place.

Figure 36 Installing the power supply

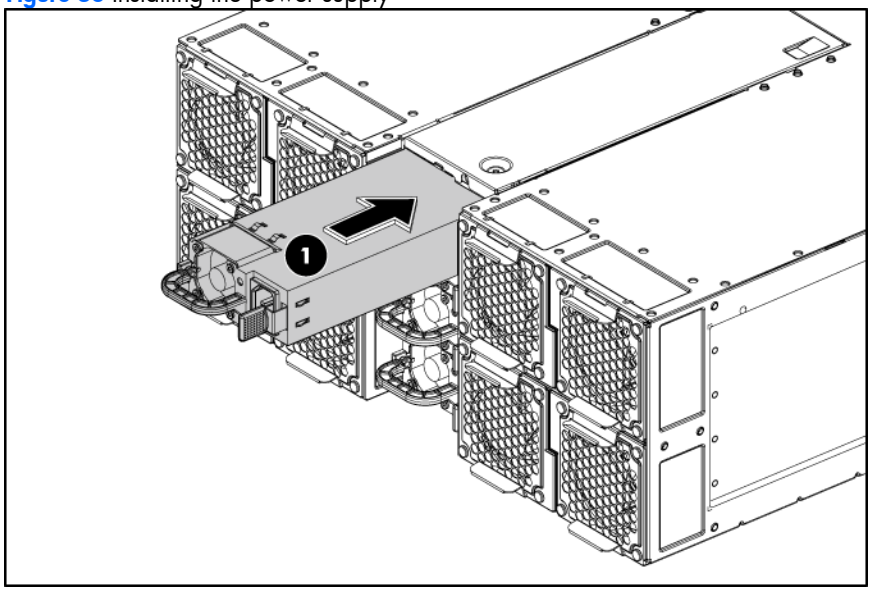

System fan

The server has eight system fans located on the rear panel of the chassis. The server supports redundant fans.

CAUTION: DO NOT mix redundant and nonredundant fans in the same chassis

The figure below identifies the system fans by their device number.

Figure 37 System fan locations

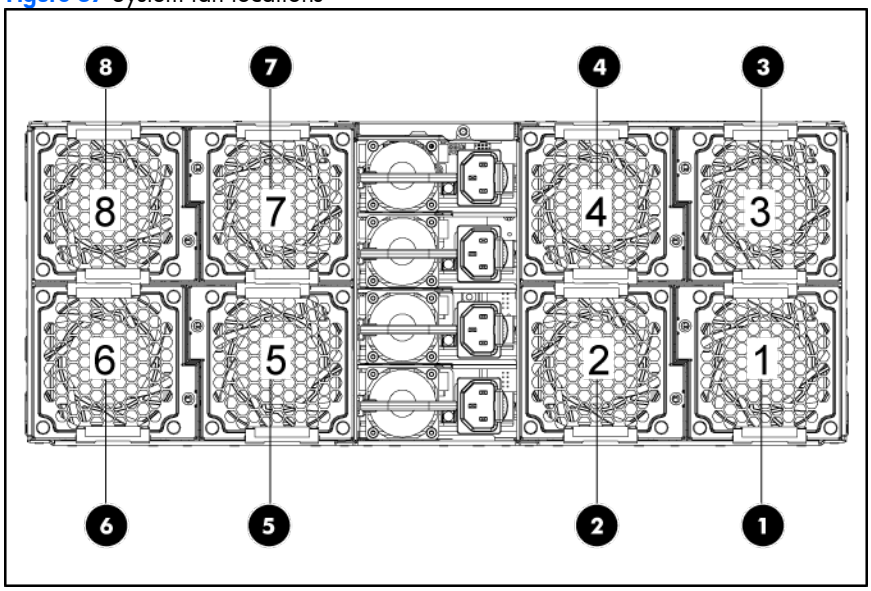

Item	Description
1	Fan 1
2	Fan 2
3	Fan 3
4	Fan 4
5	Fan 5
6	Fan 6
7	Fan 7
8	Fan 8

A new system fan can be installed to allow the server to operate properly in case a default system fan becomes defective.

To remove the system fan:

1. Squeeze the two release tabs on the system fan together to release it from the chassis.
2. Lift the system fan away from the chassis.

Figure 38 Removing the system fan

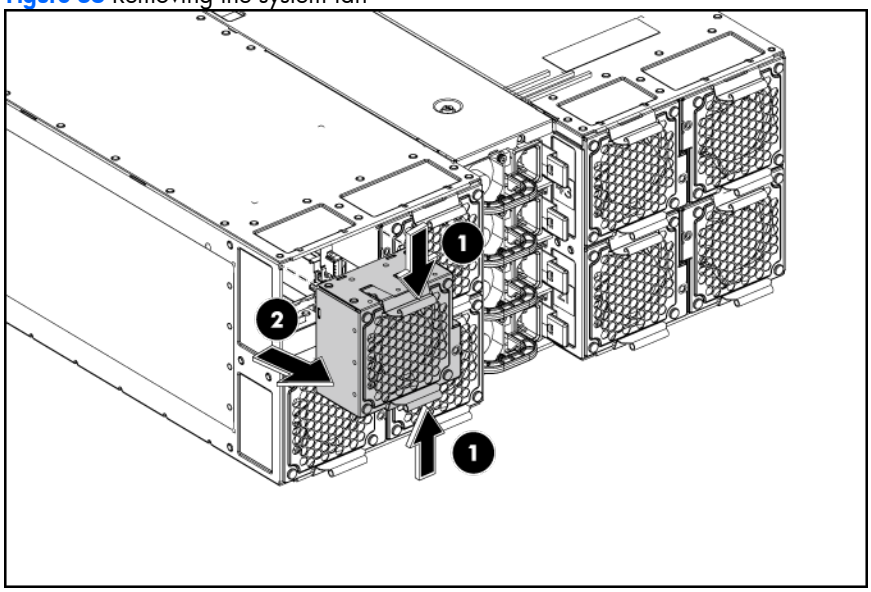

To replace the system fan:

Insert the system fan into the chassis.

Figure 39 Installing the system fan

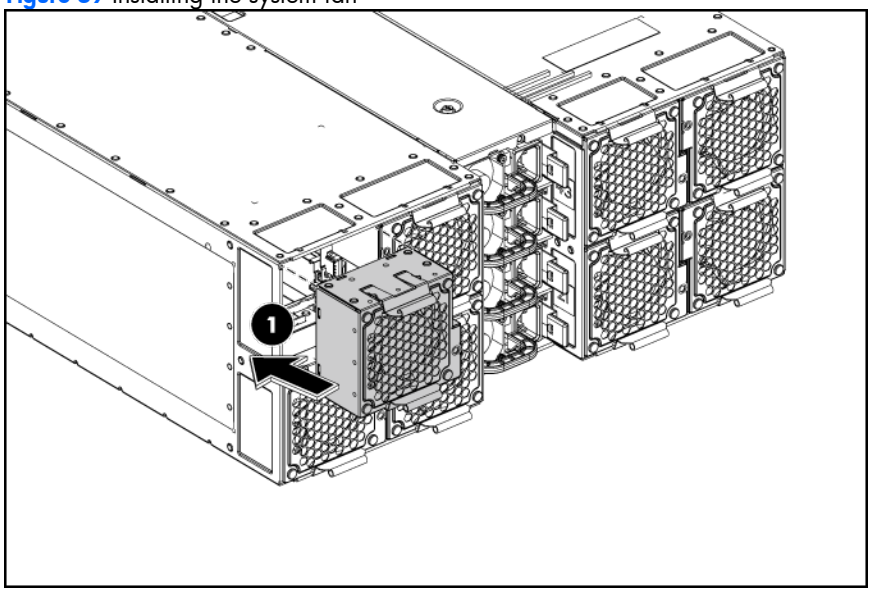

Connectors, switches, and LEDs

This chapter contains illustrations and tables identifying and describing the connectors, switches, buttons, and LED indicators of the HP ProLiant SL170s G6 Server.

Connectors and components

Front panel components

Figure 40 Front panel components of SL170s G6 server system

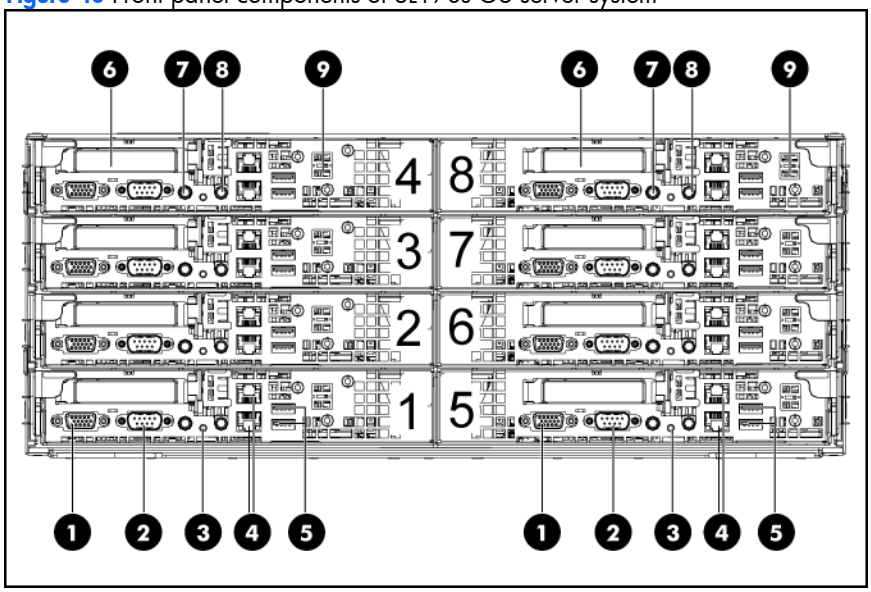

Item	Description
1	VGA port
2	Serial port
3	Health LED/SW
4	Top: 1GbE NIC 2 LAN port/shared management port Bottom: 1GbE NIC 1 LAN port
5	USB 2.0 ports
6	Front PCIe slot
7	UID LED/SW
8	Power LED
9	IPMI port (optional)

Rear panel components

Figure 41 Rear panel components of SL170s G6 server system

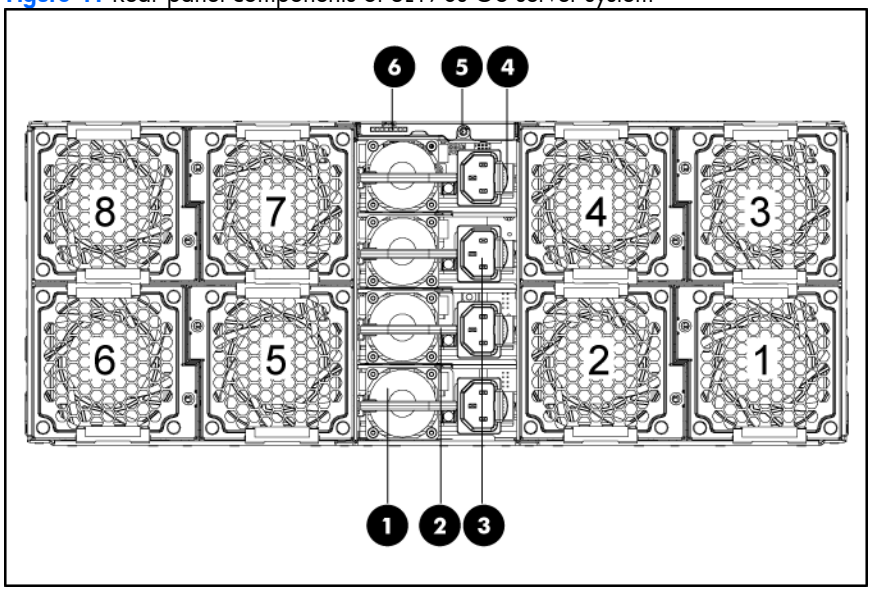

Item	Description
1	Power supply 1
2	Power supply 2
3	Power supply 3
4	Power supply 4
5	UID LED/SW
6	APM connector

System board components

Figure 42 System board components

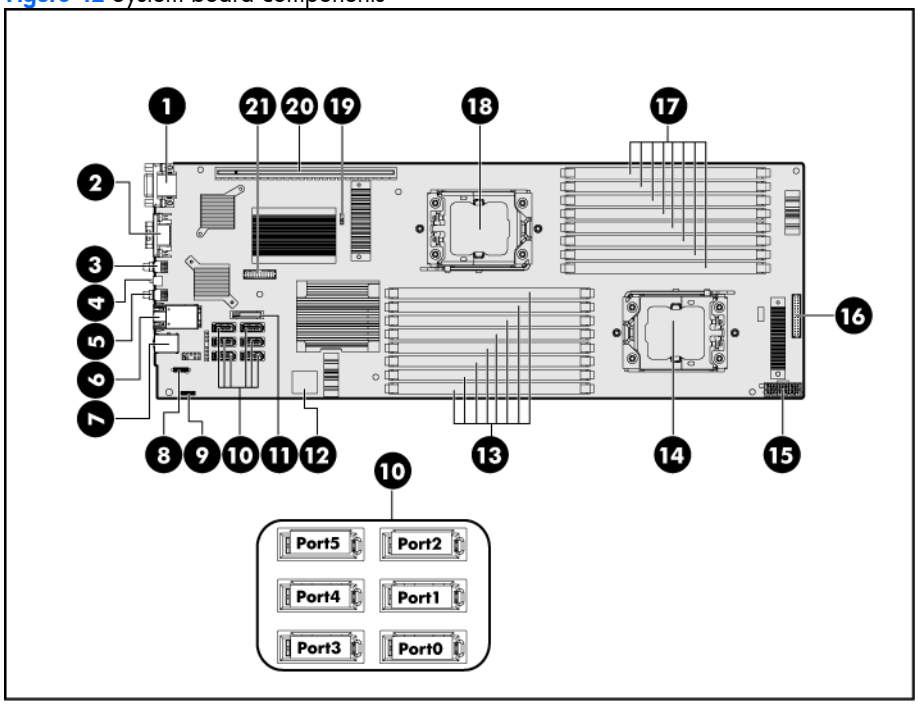

Item	Designator	Description
1	J44	VGA port
2	CN1	Serial port
3	SW4	UID LED/SW
4	CR6	Health LED
5	SW3	Power LED/SW
6	J41	GbE LAN ports
7	J48	USB 2.0 ports
8	J49	IPMI port
9	CR1~CR9	Diagnostic LEDs
10	J32 J9 J18 J19	SATA 1 connector SATA 2 connector SATA 3 connector SATA 4 connector
11	XBT1	Battery
12	J38	USB 2.0 port

Item	Designator	Description
13	J10	Processor 2 DDR3 DIMM 8A slot
	J11	Processor 2 DDR3 DIMM 7D slot
	J12	Processor 2 DDR3 DIMM 6G slot
	J13	Processor 2 DDR3 DIMM 5B slot
	J14	Processor 2 DDR3 DIMM 4E slot
	J15	Processor 2 DDR3 DIMM 3H slot
	J16	Processor 2 DDR3 DIMM 2C slot
	J17	Processor 2 DDR3 DIMM 1F slot
14	XU1	Processor 1 socket
15	J36	Power connector
16	J42	RPS connector
17	J1	Processor 1 DDR3 DIMM 8A slot
	J2	Processor 1 DDR3 DIMM 7D slot
	J3	Processor 1 DDR3 DIMM 6G slot
	J4	Processor 1 DDR3 DIMM 5B slot
	J5	Processor 1 DDR3 DIMM 4E slot
	J6	Processor 1 DDR3 DIMM 3H slot
	J7	Processor 1 DDR3 DIMM 2C slot
	J8	Processor 1 DDR3 DIMM 1F slot
18	XU2	Processor 2 socket
19	J45	Protected RTC jumper
20	J24	PCIe connector
21	J57	TPM connector

△ **CAUTION: The TPM is not a customer-removable part.**
Any attempt to remove an installed TPM from the system board breaks or disfigures the TPM security rivet. Upon locating a broken or disfigured rivet on an installed TPM, administrators should consider the system compromised and take appropriate measures to ensure the integrity of the system data.

If you suspect a TPM board failure, leave the TPM installed and remove the system board. Contact an HP authorized service provider for a replacement system board and TPM board.

Jumpers – password and chassis ID

Password (J50) and chassis ID (J45) jumpers

Table 4 System configuration switch settings

Jumper	Status
J50	1-2, password reset
J45	1-2, default setting, 2-3 clear CMOS
J53	1-2, BMC reset

Table 5 Switch settings on personality board

Jumper	Status
SW2	Switches 2 set to ON, switches 4 set to ON

LED indicators

This section contains illustration and descriptions of external status LED indicators located on the:

- Front panel
- Rear panel

These LED indicators aid in problem diagnosis by indicating the status of system components and operations of the server.

Front panel LED indicators

The front panel LED indicators allow constant monitoring of basic system functions while the server is operating.

Health LED

Figure 43 Health LED indicator location

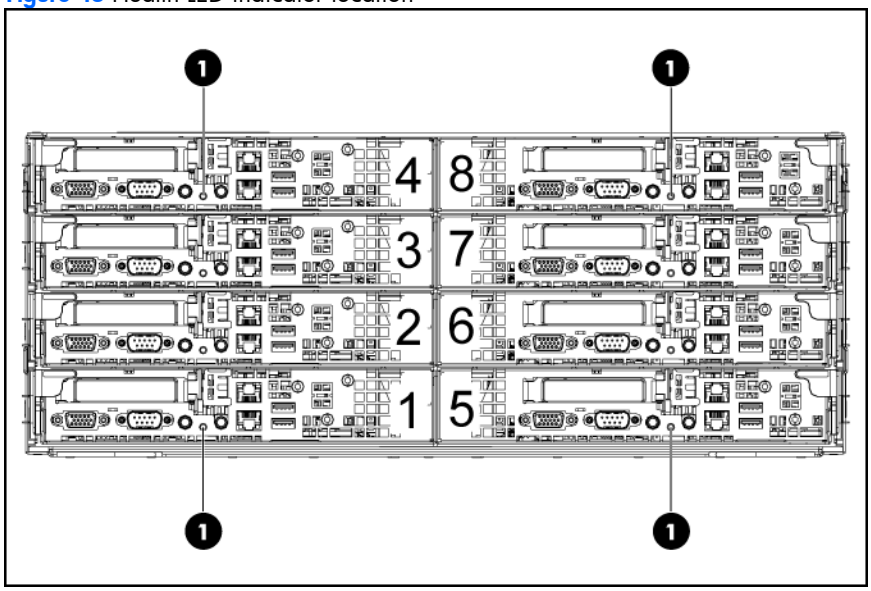

Table 6 Health LED indicator status

Components	Status	Description
Health LED indicator	Flashing red	Critical system failure detected. See SEL for details.
	Flashing amber	System degraded. See SEL for details.
	Green	System in on and no failure detected
	Off	System is off and there is no failure prior to system power off

Front UID LED

Figure 44 Front UID LED indicator locations

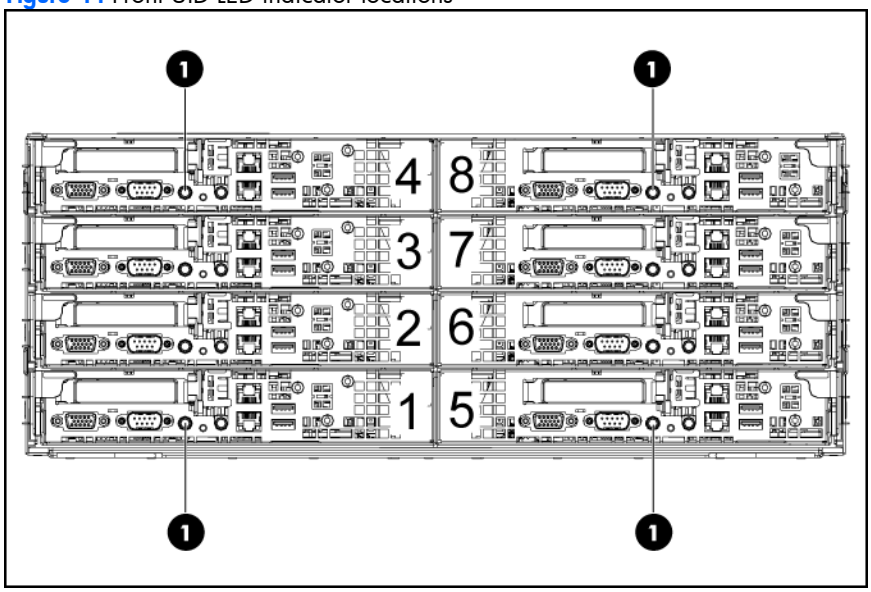

Table 7 UID LED indicator status

Components	Status	Descriptions
UID LED indicator	Blue	Identification
	Flashing blue	System is being remotely managed.
	Off	Off

Power LED indicator

The power status of the server is indicated by the bicolor LED on the front panel.

Figure 45 Power LED indicator locations

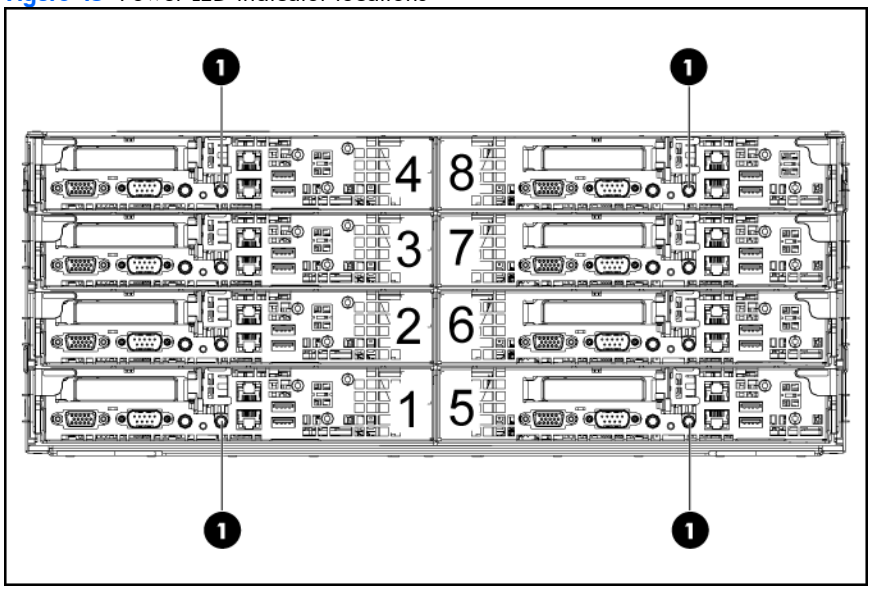

Table 8 Power LED indicator status

Component	Status	Description
Power LED indicator	Steady green	The server is operating normally.
	Steady amber	The server is system off or in hibernation with AC power.
	Off	The server is system off without AC power.

Rear panel UID LED indicator

The UID LED can be toggled by software to identify the system. This LED is also used to signal users when the system is being remotely managed. During a remote session, the UID LED will be blinking to inform the user a remote session is in progress.

Figure 46 **Rear** UID/LED indicator location

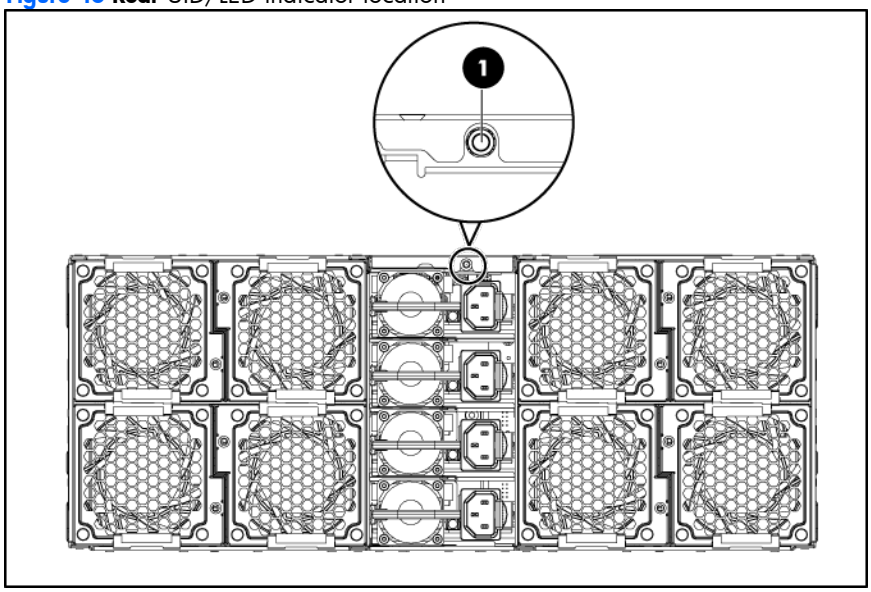

Table 9 UID/LED indicator status

Component	Status	Description
UID LED indicator	Blue	Identification
	Flashing blue	System is being remotely managed
	Off	Off

Diagnostic tools and setup utilities

This chapter provides an overview of the Power-on Self-Test (POST), the POST error messages, and BIOS, SATA setup utilities.

BIOS software

The server uses BIOS to boot up the system. BIOS software is a ROM-based firmware that allows reliability, manageability, and connectivity for server platforms. This software contains a set of programs permanently stored in an EEPROM chipset located on the system board. These programs assist in managing, initializing, and testing the hardware devices installed on the computer.

BIOS software allows you to:

- Perform configuration from the BIOS Setup Utility

  Using the Setup Utility, you can install, configure, and optimize the hardware devices on the system board. In addition, you can set various features such as serial console redirection, PXE boot, and much more.
- Initialize hardware at boot up using POST routines

  During power-on or warm reset, the BIOS perform Power-on Self-Test (POST) routines to test system components, to allocate resource for various hardware devices, and to prepare the system to boot to various operating systems.

BIOS setup utility

The HP server BIOS Setup Utility is used to configure five primary menu selections:

- Main
- Advanced
- Boot
- Security
- Exit

Accessing the BIOS Setup Utility

1. Turn on the monitor and server.
2. If the server is already turned on, save your data and exit all open applications, then restart the server.
3. When the HP logo is displayed during POST, press F10 into BIOS Setup Utility. If you fail to press F10 before POST is completed, you will need to restart the server.
4. The first page displayed is the Main menu showing the Setup Utility menu bar. Use the left (←) and right (→) arrow keys to move between selections on the menu bar. Use the up (↑) and down (↓) arrow keys to select items within a menu.

Navigating through the Setup Utility

Use the keys listed in the legend bar on the right of the Setup screen to navigate through the various menu and submenu screens of the Setup Utility.

Table 10 Setup utility navigation keys

Key	Function
← and →	To move between selections on the menu bar.
↑ and ↓	To move the cursor to the field you want. The currently selected field is highlighted. The right side of each menu screen displays a field help panel—Item Specific Help panel. This panel displays the help text for the currently selected field. It updates as you move the cursor to each field.
<+>, <–>	To select a value for the currently selected field (only if it is user-configurable). A parameter that is enclosed in square brackets is user-configurable. Grayed-out parameters are not user-configurable for one of the following reasons: • The field value is auto-configured or auto-detected. • The field value is informational only. • The field is password-protected.
Enter	To select a field value or display a submenu screen. Displays more option for items marked with ▶
Esc	If you press this key: • On one of the primary menu screens, the Exit menu displays. • On a submenu screen, the previous screen displays. • When you are making selections from a pop-up menu, the pop-up closes without making a selection.
F1	To bring up the General Help window. The General Help window describes other Setup navigation keys that are not displayed on the legend bar.
F2, F3	To change BIOS Setup Utility screen colours.
F7	Discard any changes you have made.
<Page Up> and <Page Down>	Moves the cursor to the first/last item (each menu), the item will be display highlight.
<Home> and <End>	Moves the cursor to the first/last item (each menu), the item will be display highlight.
F8	To load Failsafe Defaults
F9	To load default system values.
F10	To save changes and close the Setup Utility.

Figure 47 Setup utility general help screen

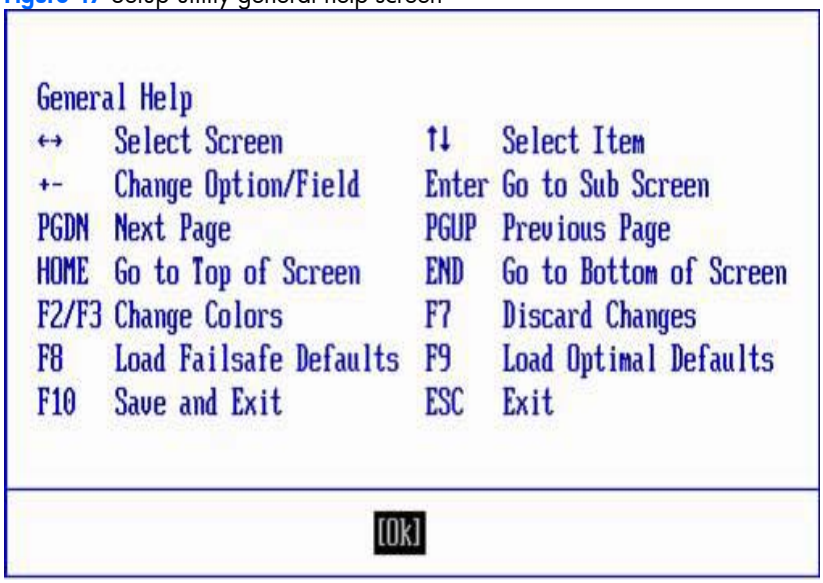

Press **F1** to get the general help message box.

Setup utility menu bar

The BIOS Setup Utility provides a menu bar with the menu selections. The menu bar choices are described in the topics below. For more details, see *HP ProLiant Software Configuration Guide*.

Main menu

Figure 48 Main menu of BIOS setup utility

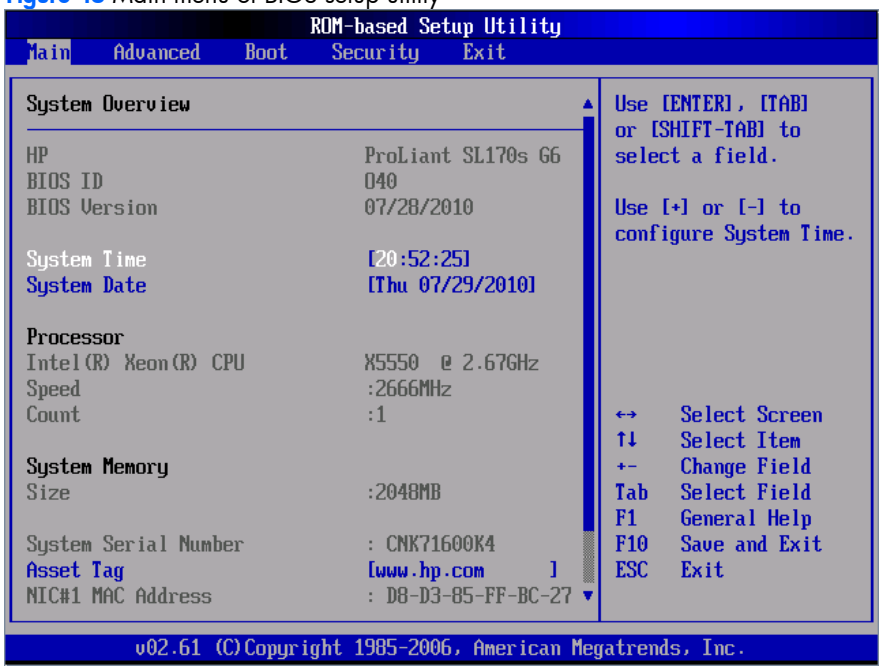

Use this menu to set the system time and date, and configure of the following items:

- View BIOS build date and version.
- View CPU type / CPU speed /CPU physical count information.
- View System memory size.

- View System serial number.
- View MAC address for the embedded NIC.
- Set Server Asset Tag.
- Set system time and date.
- Set boot features:
  - Enable or Disable POST Speed up.
  - Enable or Disable Splash screen.
  - Enable or Disable Num-Lock.
  - Set restore on AC power loss options, such as last state, off, and on.
  - If BIOS displays an error message, set POST F1 Prompt for selections, such as delayed, enabled, or disabled.

Advanced menu

Figure 49 Advanced menu of the BIOS setup utility

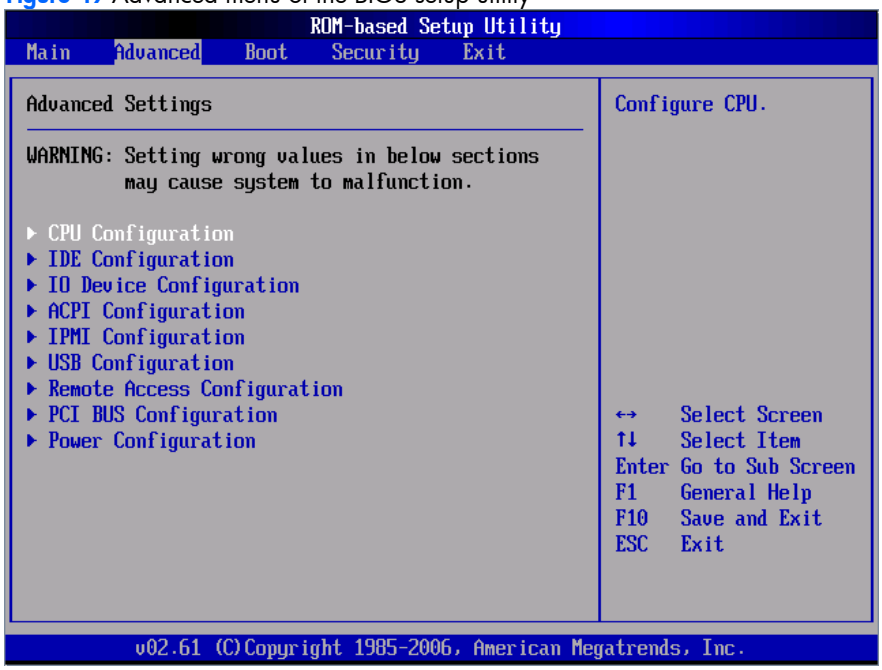

⚠ **WARNING:** Incorrect settings may cause the server to malfunction. To correct the settings, press F9 key to restore the default settings.

- **CPU Configuration** – Configure and view the current CPU configuration and settings.
- **IDE Configuration** – Use this screen to select options for the IDE Configuration Settings.
- **IO Device Configuration** – Configure the serial port settings of the server.
- **ACPI Configuration** – Use this screen to select options for the ACPI Configuration settings.
- **IPMI Configuration** – Configure the Intelligent Platform Management Interface (IPMI) settings.
- **USB Configuration** -- Configure the USB settings of the server.
- **Remote Access Configuration** – Select console redirection in the left frame of the screen to go to the sub menu for that item. Console redirection Setup options are described in this section.
- **PCI BUS Configuration** –Use this screen to select options for PCI Express Devices.
- **Power Configuration** –Use this screen to select options for the Power Configuration.

Figure 50 IDE configuration submenu

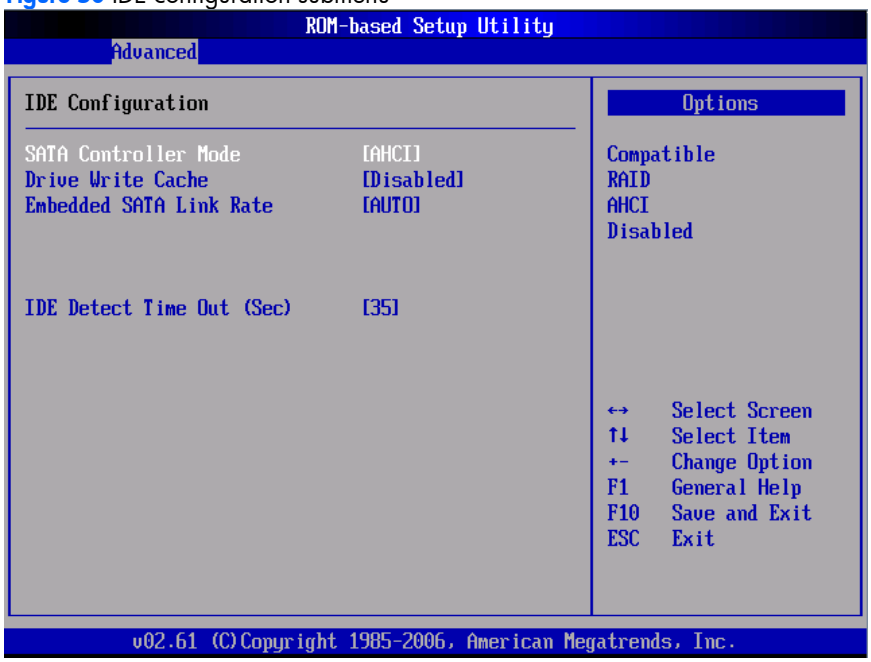

- SATA Controller Mode has four options: Compatible, RAID, AHCI and Disabled.
- If Compatible mode is selected then the drive mapping will be:
  - Port0 – **Primary IDE Master**
  - Port1 – **Secondary IDE Master**
  - Port2 – **Primary IDE Slave**
  - Port3 – **Secondary IDE Slave**
- For other modes, the drive mapping will be assigned by ports starting from Port0 and going to Port5.
- For more information about SATA Controller Mode, see below table.

Field	Options	Description
SATA Controller Mode	Compatible	Legacy Native mode, supports up to 4 drivers.
	RAID	Only available on systems with an embedded software RAID option ROM.
	AHCI	This is the DEFAULT if NCQ Mode requires that AHCI also be Enabled. Otherwise, legacy SATA Native Mode is the DEFAULT as previously specified. This is the default value.
	Disabled	SATA controller is Disabled and does not appear in the standard boot order list.

Figure 51 IPMI configuration submenu

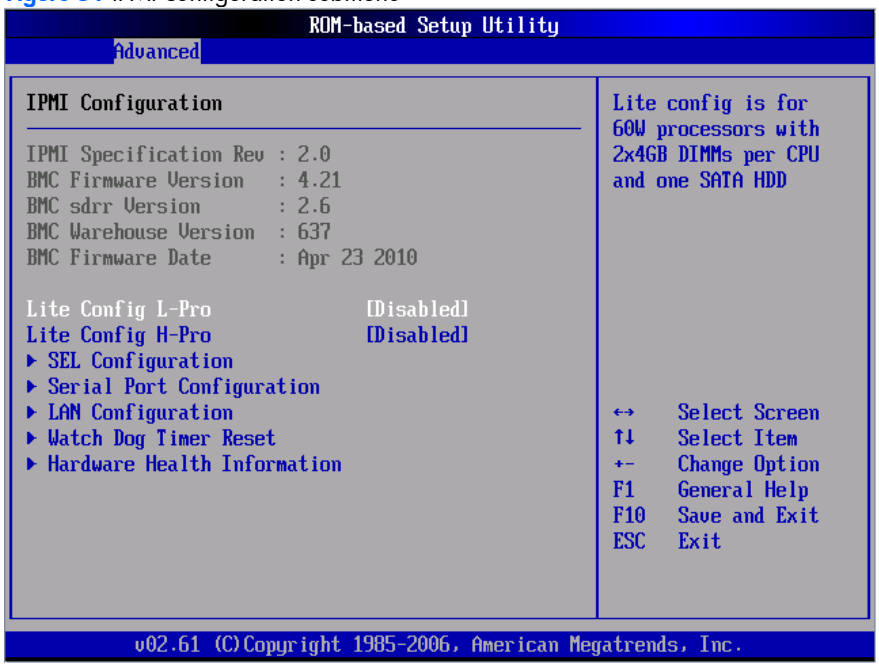

- **SEL Configuration** – Configuration of the BMC System Event Log.
- **Serial Port Configuration** – Select to configure system serial ports.
- **LAN Configuration** – Select for LAN configuration.
- **Watchdog Configuration** – Select to configure POST Watchdog Timer Action and BMC Watch Dog Time Out.
- **Hardware health information** – Select to get information about CPU temperature, ambient temperature, rear HDD Opt fan speed and system fan speed.

Boot menu

Figure 52 Boot menu of the BIOS setup utility

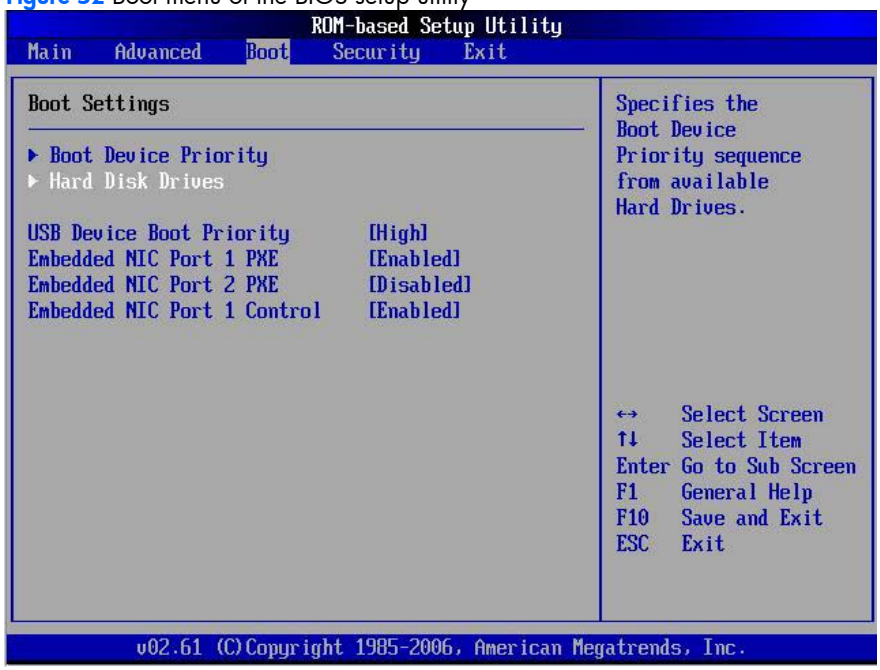

Use this menu to configure the boot settings.

- **Boot Device Priority** – Use this screen to specify the order in which the system checks for a boot device.
- **USB Device Boot Priority –** Use this screen to control the latest added USB Functions by setting the item to the desired value.
- **Embedded NIC Port 1 PXE** – Use this screen to configure the embedded NIC Port 1 PXE boot option. The default value is enabled.
- **Embedded NIC Port 2 PXE** – Use this screen to configure the embedded NIC Port 2 PXE boot option. The default value is Disabled.
- **Embedded NIC Port 1 Control** – Use this screen to enable or disable the embedded NIC1 Port.

Security menu

Figure 53 Security menu of the BIOS setup utility 1

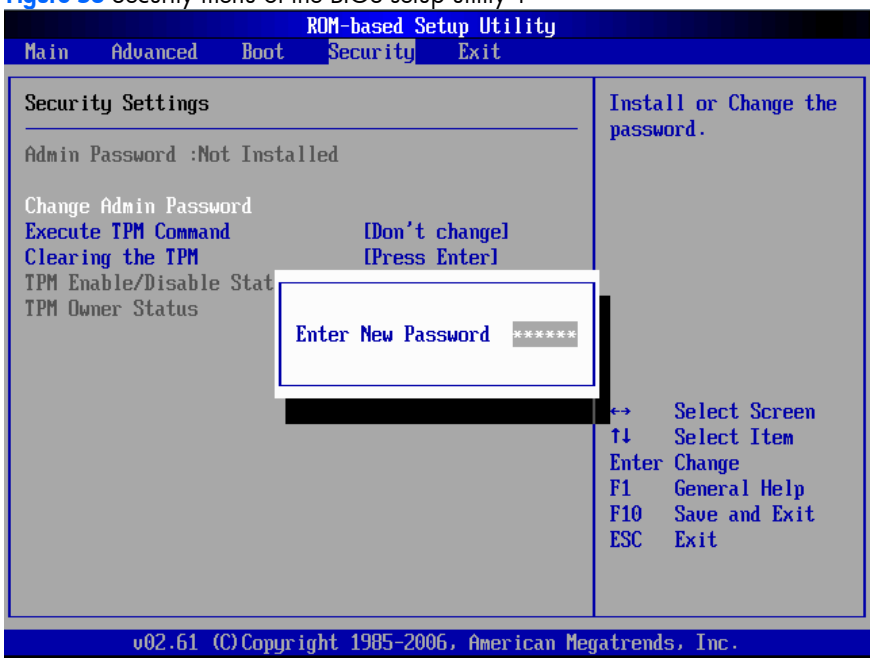

Figure 54 Security menu of the BIOS setup utility 2

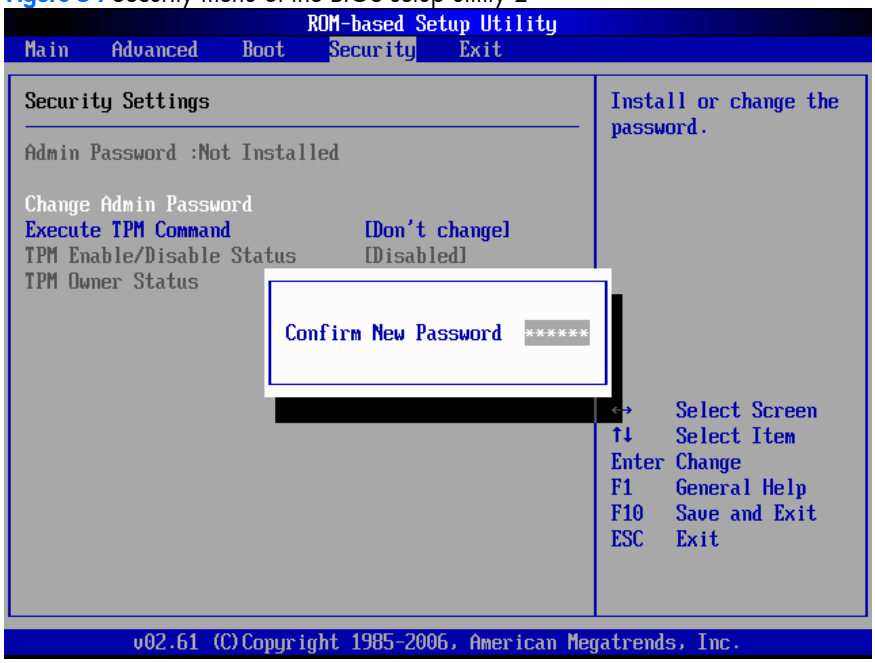

Use this menu to configure the following items:

- **Administrator Password** -- Display if an administrator password is Set or Not.
- **Change Admin Password** -- Allows you to access and change all settings in the Setup Utility. The administrator password allows you to configure access for system users.

To set a new administrator password:

1. In the Security screen, select a set password field - **Change Admin Password**, and then press **Enter**.
2. Type a new password in the **Enter New Password** box.
3. The password may consist of up to six characters. Alphanumeric characters (A-Z, a-z, 0-9) are recommended to avoid system error.
4. Retype the password to verify the first entry, and then press **Enter**.
5. Press **F10** to close the Setup Utility.
6. After setting the password, Setup automatically sets the password check to **Setup**.

Exit menu

Figure 55 Exit menu of the BIOS setup utility

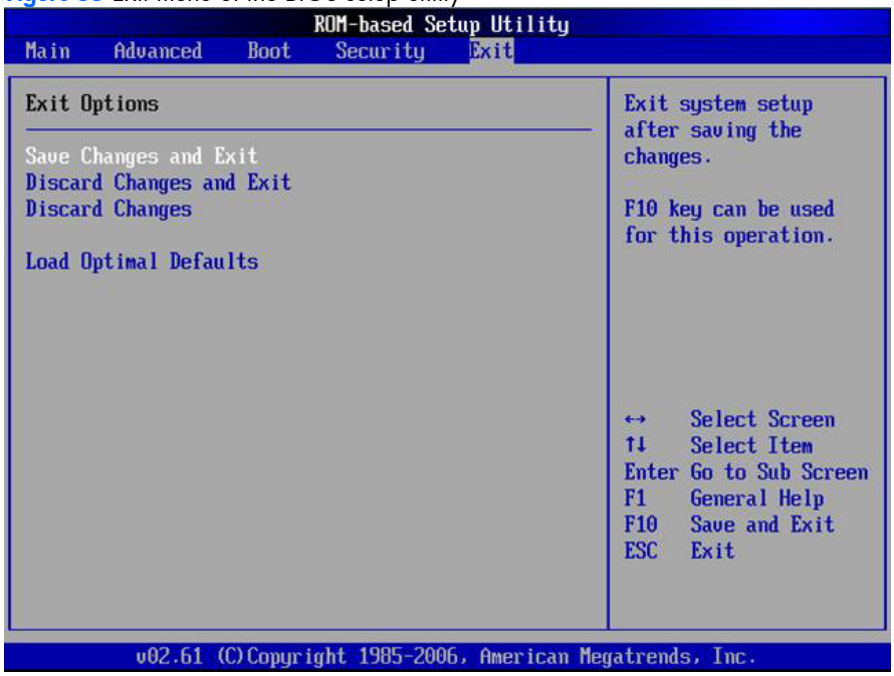

Use this menu to save changes or discard changes. When you save and exit, the server reboots.

- **Save Changes and Exit** — Save the changes you have made and exit the BIOS Setup Utility. (You can also press **F10** key.)
- **Discard Changes and Exit** — Exit the BIOS Setup Utility without saving the changes you have made. (You can also press **Esc** key.)
- **Discard Changes** — Discard any changes you have made. (You can also press **F7** key.)
- **Load Optimal Defaults** — Load the factory default values for all items. (You can also press **F9** key.)

BIOS update

Perform the steps below to update BIOS:

1. Download the Smart Component (SPxxxxx.exe) to a directory on your hard drive.
2. Execute (SPxxxxx.exe) and followed with direction to complete the steps. “ProLiant Flash Update” interface will appear.
3. Select items which need to execute:
   - Create a bootable ROMPaq diskette
   - Create a bootable ROMPaq USB Key
   - Create a bootable ROMPaq CD
   - ROMPaq Diskette Flat Files
   - Create a label for the ROMPaq diskette
   - Network ROM Flashing Capabilities
4. Reboot SL170s G6 Server with one of the above bootable devices and make sure the BIOS setting allows booting from the USB disk.
5. Follow the on-screen instructions to finish the flashing of the BIOS.

Clear CMOS

You may need to clear the Setup configuration values (CMOS) if the configuration has been corrupted, or if incorrect settings made in the Setup Utility have caused error messages to be unreadable.

To clear CMOS:

1. Perform the Pre-installation procedure.
2. If necessary, remove any accessory boards or cables that prevent access to the system configuration switch.
3. Locate the system configuration button (SW2) on the system board.
4. Press the button. AC power must not be connected.
5. Perform the Post-installation instructions.
6. During POST, press **F10** to access the Setup Utility.
7. Load setup defaults by pressing **F9**.
8. Set time, date, and other system values.
9. Press **F10** to close the Setup Utility.

NOTE: Clearing CMOS restore all system configurations and password default settings.

Power-on self-test (POST)

Before you can use a server, all devices must be tested and initialized, and the operating system must be bootstrapped to the memory. This is referred to as Power–on Self-Test or POST. POST is a series of diagnostic tests that checks firmware and hardware components on the system to ensure that the server is properly functioning. This diagnostic function automatically runs each time the server is powered on.

These diagnostics, which reside in the BIOS ROM, isolate server-related logic failures and indicate the board or component that you need to replace, as indicated by the error messages. Most server hardware failures will be accurately isolated during POST. The number of tests displayed depends on the configuration of the server.

During POST you can:

- Press **ESC** to skip the HP logo and go to POST boot progress display system summary screen.
- Press **F10** to access the Setup Utility.
- Press **F12** to request a network boot (PXE).

POST error indicators

When POST detects a system failure, it displays a POST error message.

POST errors message definitions

Whenever a non-fatal error occurs during POST, an error message describing the problem appears onscreen. These error messages are displayed in normal video (white text on black background), and show the details of the error. The following is an example of a POST error message:

```
012 --- CMOS Date/Time not set
```

Table 11 lists the most common POST error messages with corresponding troubleshooting recommendation. HP recommends that you correct the error, even if the server appears to boot successfully.

Table 11 POST error messages

Error code	Error message	Description/corrective action
000h	Timer Error	Indicates an error while programming the count register of channel 2 of the 8254 timer. This may indicate a problem with system hardware. Requires repair of the system board.
003h	CMOS Battery Low	CMOS Battery is low. This message usually indicates that the CMOS battery needs to be replaced. It could also appear when the users intentionally discharge the CMOS battery.

Table 11 POST error messages

Error code	Error message	Description/corrective action
004h	CMOS Settings Wrong	CMOS settings are invalid. This error can be resolved by using F9 to load optimal default in the Setup Utility.
00Ah	KBC BAT Test failed	Bat test on keyboard controller failed
00Eh	A: Drive Error	The A: drive could not be properly initialized by the BIOS. This message is typically displayed when the BIOS is trying to detect and configure floppy devices in POST
00Fh	B: Drive Error	The B: drive could not be properly initialized by the BIOS. This message is typically displayed when the BIOS is trying to detect and configure floppy devices in POST
010h	Floppy Controller Failure	The floppy controller initialized failed, the devices could not use normally
012h	CMOS Date/Time Not Set	The CMOS date and/or time are invalid. This error can be resolved by readjusting the system time in the Setup Utility.
048h	Password check failed	Password is incorrect after retried a few times. Users might need to reset the password.
04Ch	Keyboard/Interface Error	Keyboard controller failed test. This may indicate a problem with system hardware.
05Dh	S.M.A.R.T. Status BAD, Backup and Replace	Hard Disk S.M.A.R.T feature test fail ,indicate a problem with hard disk
05Eh	Password check failed	If user input incorrect password more than three times, then display this error information and continue to boot.
110h	Un-correctable DRAM ECC Error detected at cpuXX/DIMM0X (cpu01/DIMM08)	Detect multi-bit error in the DIMM prompt, press F1 continue to boot
500h	Unsupported Processor	When install the processor which isn't in PTM, this will appear.

Table 11 POST error messages

Error code	Error message	Description/corrective action
608h	Fan Solution Not Sufficient! Critical Failure Detected - System Shutting Down in xx seconds!	If one or more fan are missing, this message will appear with 'system fan x missing' together.
609h	Temperature Violation Detected! Waiting 5 minutes for system to cool. Press ESC Key to resume booting without waiting for the system to cool. Warning: Pressing ESC is NOT recommended as system may shutdown unexpectedly. Recheck Temperature in xxx seconds!	If system detects one or more temperature sensor over heat.
611h	System Event Log full	If system cannot store any more event log, this will appear at post.
613h	Power Supply Mismatch Error - System Halted	When different vendor power supplies are installed, this appears and the system halts.
626h	BMC Recovery Jumper Set or BMC Firmware corrupted!	When Jumper J53 is installed or BMC firmware is corrupt, this appears.
628h	Inlet Ambient Sensor Cable Did Not Get Plugged or Came Loose!	When Inlet Ambient sensor board is uninstalled or the sensor board cable is loose, this appears and the fan runs at full speed.
630h	Power Supply 1 Failure or Power Supply Unplugged!	When power supply 1 is installed and the power cable is disconnected or the power is failed, this appears.
631h	Power Supply 2 Failure or Power Supply Unplugged!	When power supply 2 is installed and the power cable is disconnected or the power is failed, this appears.
633h	Power Supply 3 Failure or Power Supply Unplugged!	When power supply 3 installed and the power cable is disconnected or the power is failed, this appears.
643h	Invalid or Unknown Chassis Detected! Upgrade System BIOS or Check Hardware Configuration!	When Chassis ID is not defined, this appears.
644h	Power Supply 4 Failure or Power Supply Unplugged!	When power supply 4 is installed and the power cable is disconnected or the power is failed, this appears.

Table 11 POST error messages

Error code	Error message	Description/corrective action
650h	System Fan 1a Missing	If system fan1a is not installed or has failed, when the system is installed with non-redundant fans, this message appears and the system shuts down in minutes. When the system is installed with redundant fans, if only one fan is missing, this appears and the other fans run at high speed. If two fans are missing, this appears and the system shuts down in minutes.
651h	System Fan 1b Missing	If system fan1b is not installed or failed, when one fan missing, this message appears and other fans run at high speed. When two fans missing at the same time, this appears and system shuts down in minutes.
652h	System Fan 2a Missing	If system fan2a is not installed or failed, when the system installed non-redundant fan, this message appears and the system shuts down in minutes. When system installed with redundant fan, if only one fan missing, this appears and the other fans run at high speed. If two fans missing, this appears and system shuts down in minutes.
653h	System Fan 2b Missing	If system fan2b is not installed or failed, when one fan missing, this message appears and other fans run at high speed. When two fans missing at the same time, this appears and system shuts down in minutes.
654h	System Fan 3a Missing	If system fan3a is not installed or failed, when the system installed non-redundant fan, this message appears and system shuts down in minutes. When system installed with redundant fan, if only one fan missing, this appears and the other fans run at high speed. If two fans missing, this appears and system shuts down in minutes.

Table 11 POST error messages

Error code	Error message	Description/corrective action
655h	System Fan 3b Missing	If system fan3b is not installed or failed, when one fan missing, this message appears and other fans run at high speed. When two fans missing at the same time, this appears and system shuts down in minutes.
656h	System Fan 4a Missing	If system fan4a is not installed or failed, when the system installed non-redundant fan, this message appears and system shuts down in minutes. When system installed with redundant fan, if only one fan missing, this appears and the other fans run at high speed. If two fans missing, this appears and system shuts down in minutes.
657h	System Fan 4b Missing	If system fan4b is not installed or failed, when one fan missing, this message appears and other fans run at high speed. When two fans missing at the same time, this appears and system shuts down in minutes.
658h	System Fan 5a Missing	If system fan5a is not installed or failed, when the system installed non-redundant fan, this message appears and system shuts down in minutes. When system installed with redundant fan, if only one fan missing, this appears and the other fans run at high speed. If two fans missing, this appears and system shuts down in minutes.
659h	System Fan 5b Missing	If system fan5b is not installed or failed, when one fan missing, this message appears and other fans run at high speed. When two fans missing at the same time, this appears and system shuts down in minutes.

Table 11 POST error messages

Error code	Error message	Description/corrective action
661h	System Fan 6a Missing	If system fan6a is not installed or failed, when the system installed non-redundant fan, this message appears and system shuts down in minutes. When system installed with redundant fan, if only one fan missing, this appears and the other fans run at high speed. If two fans missing, this appears and system shuts down in minutes.
662h	System Fan 6b Missing	If system fan6b is not installed or failed, when one fan missing, this message appears and other fans run at high speed. When two fans missing at the same time, this appears and system shuts down in minutes.
663h	System Fan 7a Missing	If system fan7a is not installed or failed, when the system installed non-redundant fan, this message appears and system shuts down in minutes. When system installed with redundant fan, if only one fan missing, this appears and the other fans run at high speed. If two fans missing, this appears and system shuts down in minutes.
664h	System Fan 7b Missing	If system fan7b is not installed or failed, when one fan missing, this message appears and other fans run at high speed. When two fans missing at the same time, this appears and system shuts down in minutes.
665h	System Fan 8a Missing	If system fan8a is not installed or failed, when the system installed non-redundant fan, this message appears and system shuts down in minutes. When system installed with redundant fan, if only one fan missing, this appears and the other fans run at high speed. If two fans missing, this appears and system shuts down in minutes.

Table 11 POST error messages

Error code	Error message	Description/corrective action
666h	System Fan 8b Missing	If system fan8b is not installed or failed, when one fan missing, this message appears and other fans run at high speed. When two fans missing at the same time, this appears and system shuts down in minutes.

POST related troubleshooting

Perform the following procedures when POST fails to run, displays error messages, or emits beep codes.

If the POST failure is during a routine boot up, check the following:

- All external cables and power cables should be firmly plugged in.
- The power outlet to the server should be connected and works correctly.
- The server and monitor are both turned on. The bicolour status LED indicator on the front panel must be lit up green.
- The monitor's contrast and brightness settings are correct.
- All internal cables are properly connected and all boards firmly seated.
- The processor is fully seated in its socket on the system board.
- The cooler assembly is properly installed on top of the processor.
- All memory modules are properly installed.
- If you have installed a PCI accessory board, verify that the board is firmly seated and any switches or jumpers on the board are properly set. See the documentation provided with the accessory board.
- All internal cabling and connections are in their proper order.
- If you have changed any switches on the system board, verify that each is properly set.

Physical and operating specifications

This chapter provides physical and operating specifications for the HP ProLiant SL170s G6 Server.

System unit

Table 12 Hardware specifications

Item	Components
Processor socket	Intel 1366pin FCLGA
Processor support	Quad-Core Intel Xeon Processor 5500 series
Chipset	Intel Tylersburg 36D/Intel ICH10R
Hardware monitoring device	IPMI 2.0 compliant with Server Engine Pilot II
Gigabit Ethernet controller	Intel 82576
Memory controller	Intel Tylersburg 36D
SATA and IDE controllers	Intel ICH10R
Embedded video controller	ServerEngines VGA core integrated into Pilot II
Memory	• Sixteen DDR3 800/1066/1333 MHz DIMM slots with ECC • Support RDIMM and UDIMM
Media storage	SAS/SATA hard drive (SAS drives require external HBA card)
I/O ports	USB 2.0 ports (two ports on front panel, one internal connector on the system board), video port, serial port and two GbE ports
Status LED indicators Front panel	• Power/system health status • UID status
Rear Panel	• LAN activity • LAN link status • UID status
System Board	• Auxiliary power indicators
Power supply unit (PSU)	1200W, redundant PSU support 750W, redundant PSU support
Thermal solution	Eight 80mm system fans

Table 13 Physical dimensions

Item	Description
System board platform	ATX (Advanced Technology Extended)
System board dimension	17.935''x6.5''
Dimensions (H x W x D) (with bezel)	1.62 x 8.69 x 32.249 inch
Server weight (approximate)	Full loading (all memory, hard drives, power supplies, and processors installed) 83.97kg Light loading (one piece of memory, one hard drive, and one processor 8 trays installed) 60.15kg

Table 14 Environmental specifications

Item	Description
Thermal output (maximum operating)	1700 W/hr
System inlet temperature Operating	50° to 95° F (10° to 35° C) at sea level with an altitude derating of 1.8°F per every 1000 ft (1.0°C per every 305 m) above sea level to a maximum of 10,000 ft (3050 m), no direct sustained sunlight. Maximum rate of change is 18°F/hr (10°C/hr). The upper limit may be limited by the type and number of options installed. System performance may be reduced if operating with a fan fault or above 86°F (30°C).
System inlet temperature Non-operating	40° to 140° F (-40° to 60° C) Maximum rate of change is 36°F/hr (20°C/hr).
Relative humidity (non-condensing) Operating	10% to 85% relative humidity (Rh), 82.4°F (28°C) maximum wet bulb temperature, non-condensing.
Relative humidity (non-condensing) Non-operating	10% to 95% relative humidity (Rh), 101.7°F (38.7°C) maximum wet bulb temperature, non-condensing.
Altitude Operating	10,000 ft (3050 m). This value may be limited by the type and number of options installed. Maximum allowable altitude change rate is 1500 ft/min (457 m/min).
Altitude Non-operating	30,000 ft (9144 m). Maximum allowable altitude change rate is 1500 ft/min (457 m/min).
Acoustic noise	Listed are the declared A-Weighted sound power levels (LWAd) and declared average bystander position A-Weighted sound pressure levels (LpAm) when the product is operating in a 23°C ambient environment. Noise emissions were measured in accordance with ISO 7779 (ECMA 74) and declared in accordance with ISO 9296 (ECMA 109). Idle LWAd 6.7 LpAm 50.0 dBA Operating LWAd 7.0 LpAm 53.40 dBA

Table 14 Environmental specifications

Item	Description
Emissions classification (EMC) FCC rating	Class A
Normative standards	CISPR 22; EN55022; EN55024; FCC CFR 47, Pt 15; ICES-003; CNS13438; GB9254; K22;K24; EN 61000-3-2; EN 61000-3-3; EN 60950-1; IEC 60950-1

Table 15 Hot-plug power supply specifications

Item	Description
Dimensions (H x W x D)	38.48 mm x 86.36 mm x 190.52 mm
Weight (approximate)	1.1 kg
Input requirements: Rated line voltage (per power supply)	90 to 140 VAC 180 to 264 VAC
Rated input frequency	47 to 63 Hz
Rated input current	7.31A at 115VAC 3.6A at 230VAC
BTU rating	N/A
Rated input power	855W (at 100 VAC), 840.72W (at 200 VAC)
Operational Input Voltage Range (Vrms)	90 VAC to 264 VAC full range

NOTE: To review typical system power ratings use the Power Calculator located at the HP website http://h18000.www1.hp.com/products/solutions/power/advisor-online/HPPowerAdvisor.html.

Documentation feedback

HP is committed to providing documentation that meets your needs. To help us improve the documentation, send any errors, suggestions, or comments to Documentation Feedback (mailto:docsfeedback@hp.com). Include the document title and part number, version number, or the URL when submitting your feedback.

Index

B

battery
- replacement warnings, 47

BIOS Setup Utility
- accessing, 63
- additional navigation keys, 64
- menu bar, 63

BIOS software
- Overview, 63

C

cable management, 31

CSR (customer self repair), 5

customer self repair (CSR), 5

D

Diagnostic tools and Setup Utilities
- BIOS Setup Utility, 63
- BIOS software, 63
- BIOS update, 72
- clear CMOS, 72
- POST, 73

dimensions
- server, 81

Drives and Personality board
- cable management, 31
- hard drives, 33
- Personality board, 36

Drives, Front I/O and Personality board
- cable connections, 32

E

electric shock
- symbol, 28
- warning, 27

F

front panel components, 55

Front PCIE
- spare part number, 19

H

hard drive
- installing, 35
- removing, 34

hardware configuration
- hard drives, 33
- IPMI cards, 46
- memory, 44
- power supply unit, 49
- processor, 37
- references, 26
- system battery, 47
- system fan, 53

Hardware configuration tools, 26

hardware specifications
- I/O ports, 80
- LAN controller, 80
- memory, 80
- power supply unit, 80
- processor socket, 80
- processor support, 80
- status LED indicators, 80
- thermal solution, 80

Hardware Specifications
- chipset, 80
- default media storage, 80
- Hardware monitoring device, 80

hazardous conditions. *See* symbols on equipment

hazardous energy circuits
- symbol, 28

heat sink
- installing, 43
- removing, 37

hot surface
- symbol, 28
- warning, 27

HP
- contact information, 25
- technical support requirements, 25

I

improper airflow
- caution, 27

IPMI card

installing, 46
removing, 46

J

Jumpers-Password and Chassis, 58

L

LAN controller, 80
LED indicators
UID, 62

M

Memory module
spare part number, 20
memory controller, 80
memory modules
guidelines for installation, 44
installing, 45
removing, 45

O

onboard controllers
LAN, 80
memory controller, 80
storage controller, 80

P

personality board
installing, 36
removing, 36
Personality board
spare part number, 21
physical dimensions
system board, 81
Power LED indicator, 61
Power supply
spare part number, 21
power supply unit. *See* PSU
Power/data Backplane Board
spare part number, 21
power-down procedures, 29
Power-On Self Test
POST error indicators, 73
POST related troubleshooting, 79
recoverable POST errors, 73
processor
applying thermal grease, 42
installing, 39
removing, 38
processor socket
specification, 80
Processors
spare part number, 20
PSU
removing, 51
replacement warnings, 50
replacing, 52
type, 80
PSU Backplane
replacing, 51

R

rear panel components, 56

S

server dimensions
rack, 81
server warnings and cautions, 27
storage controller, 80
symbols on equipment, 28
system battery
replacing, 47
system board
dimensions, 81
platform, 81
System board
removing, 48
replacing, 49
System Board
spare part number, 19, 21
System board components, 57
System Board Configuration, 37
system fan
removing, 54
replacing, 54
System fan
spare part number, 21
system LEDs. *See* status LEDs
system structure
front panel, 55
rear panel, 56
system board components, 57
system tray
removing, 29
replacing, 31
System Unit

specifications, 80

T

thermal solution, 80

W

warnings
battery replacement, 47
PSU replacement, 50
warranty, 5