HP ProLiant SL250s Gen8 Server - Product Information Reference

Part Number:
Published:
Edition:

HP ProLiant SL250s Gen8 Server - Product Information Reference

Abstract

Part Number:
Published:
Edition:

© Copyright –

Notices

The information contained herein is subject to change without notice. The only warranties for Hewlett Packard Enterprise products and services are set forth in the express warranty statements accompanying such products and services. Nothing herein should be construed as constituting an additional warranty. Hewlett Packard Enterprise shall not be liable for technical or editorial errors or omissions contained herein.

Confidential computer software. Valid license from Hewlett Packard Enterprise required for possession, use, or copying. Consistent with FAR 12.211 and 12.212, Commercial Computer Software, Computer Software Documentation, and Technical Data for Commercial Items are licensed to the U.S. Government under vendor's standard commercial license.

Links to third-party websites take you outside the Hewlett Packard Enterprise website. Hewlett Packard Enterprise has no control over and is not responsible for information outside the Hewlett Packard Enterprise website.

Acknowledgments

Intel®, Itanium®, Optane™, Pentium®, Xeon®, Intel Inside®, and the Intel Inside logo are trademarks of Intel Corporation in the U.S. and other countries.

AMD and the AMD EPYC™ and combinations thereof are trademarks of Advanced Micro Devices, Inc.

Microsoft® and Windows® are either registered trademarks or trademarks of Microsoft Corporation in the United States and/or other countries.

Adobe® and Acrobat® are trademarks of Adobe Systems Incorporated.

Java® and Oracle® are registered trademarks of Oracle and/or its affiliates.

UNIX® is a registered trademark of The Open Group.

All third-party marks are property of their respective owners.

Revision history

Part number	Publication date	Edition	Summary of changes

Table of contents

Overview

- Summary ... 6
  - Product description ... 6
  - What's New ... 6
- Standard Models ... 7
  - New RoHS compliant part numbers ... 7
  - Standard Models ... 7
- Product features ... 8

Specifications

- Technical Specifications ... 19
- Physical Specifications ... 20
- Environmental Specifications ... 20
- Electrical Specifications ... 21
- Safety Certifications ... 22

Compatibility/Supportability

- Spare Parts ... 22
  - New model specific parts lists ... 22
  - Server Components ... 23
- Option Parts ... 34
  - New model specific parts lists ... 35
  - Accelerator Options ... 35
  - Care Pack Services ... 36
  - Cloudera Licensing ... 38
  - Disk Storage Systems ... 38
  - FlexibleLOM Adapters ... 39
  - GPU Computing Modules ... 39
  - Hard Drives ... 40
  - High Performance Clusters ... 43
  - InfiniBand ... 43
  - Insight software ... 44
  - iLO ... 44
  - Memory ... 45
  - Networking ... 47
  - Processors ... 48

Power Distribution Unit (PDU) 51
Power Supply 54
Racks 55
Server Nodes 57
Storage Controllers 58
Tape backup 59
Uninterruptible Power System (UPS) 59
Unique Options 60
USB and SD options 60
Software Compatibility 60
OS Compatibility 61
Useful Links 61

Summary

Subtopics

Product description
What's New

Product description



The HP ProLiant SL250s Gen8 Server with HP ProActive Insight architecture delivers even greater levels of configurability for high performance and scale-out deployments, to help lower total cost of ownership. Up to four HP ProLiant SL250s Gen8 nodes, in a half-width, 2U modular form factor, fit into the HP s6500 scalable system chassis. In addition, each node can support up to three Graphics Processing Unit (GPU) or four additional 2.5 in Small form factor (SFF) hard drives.

What's New

Updated information pertaining to availability of various options.

Standard Models

Subtopics

New RoHS compliant part numbers
Standard Models

New RoHS compliant part numbers

To find the latest RoHS compliance information, please **click here to view the HPE PartSurfer web page** and then click on one of the linked model numbers. When locating RoHS information in PartSurfer, you can use the Option part number for the components, the sales order number for a system that the component is used in, or the Spare part number for a specific part. You can find the sales order numbers and Option part numbers in the Product QuickSpecs.

Standard Models

Description	Model Number
HP ProLiant s6500 without Fans 4 U Configure-to-order (CTO) Chass is	614167-B21 **Click here to obtain parts list for this model.**
HP ProLiant SL250s Gen8 E5-2665 2P 8GB 2U Left Tray Server	659042-B21 [1]
HP ProLiant SL250s Gen8 E5-2665 2P 8GB 2U Right Tray Server	659050-B21 [1]

NOTE

1. Direct link to the parts list will be added as soon as it is available.

Product features

Feature	Description
Processor	**E5-2600 v2 series Processors - Entry Processors**[1] • Intel Xeon E5-2630 v2 (2.6 GHz/6-core/15MB/7.2 GT/s QuickPath Interconnect (QPI)/80 W, Double Data Rate (DDR)3-1600, Hyper-Threading (HT), Turbo2- 3/3/3/3/4/5) • Intel Xeon E5-2650L v2 (1.7 GHz/10-core/25MB/8.0 GT/s QPI/70 W, DDR3-1600, HT, Turbo2- 2/2/2/2/2/2/2/2/3/4) **Performance Processors**[2] • Intel Xeon E5-2695 v2 (2.4 GHz/12-core/30MB/8.0 GT/s QPI/115 W, DDR3-1866, HT, Turbo2- 4/4/4/4/4/4/4/4/5/6/7/8) • Intel Xeon E5-2680 v2 (2.8 GHz/10-core/25MB/8.0 GT/s QPI/115 W, DDR3-1866, HT, Turbo2- 3/3/3/3/3/4/5/6/7/8) • Intel Xeon E5-2670 v2 (2.5 GHz/10-core/25MB/8.0 GT/s QPI/115 W, DDR3-1866, HT, Turbo2- 4/4/4/4/4/4/5/6/7/8) • Intel Xeon E5-2660 v2 (2.2 GHz/10-core/25MB/8.0 GT/s QPI/95 W, DDR3-1866, HT, Turbo2- 4/4/4/4/4/4/5/6/7/8) • Intel Xeon E5-2650 v2 (2.6 GHz/8-core/20MB/8.0 GT/s QPI/95 W, DDR3-1866, HT, Turbo2- 4/4/4/4/5/6/7/8) **E5-2600 series Processors - Entry Processors**[3] • Intel Xeon E5-2609 (2.4 GHz/4-core/10MB/6.4 GT/s QPI/80 W) • Intel Xeon E5-2603 (1.8 GHz/4-core/10MB/6.4 GT/s QPI/80 W) **Base Processors**[4] • Intel Xeon E5-2640 (2.5 GHz/6-core/15MB/7.2 GT/s QPI/95 W, DDR3-1333, HT, Turbo2- 3/3/4/4/5/5)

Feature	Description
	• Intel Xeon E5-2630 (2.3 GHz/6-core/15MB/7.2 GT/s QPI/95 W, DDR3-1333, HT, Turbo2- 3/3/4/4/5/5) • Intel Xeon E5-2620 (2.0 GHz/6-core/15MB/7.2 GT/s QPI/95 W, DDR3-1333, HT, Turbo2- 3/3/4/4/5/5) • Intel Xeon E5-2630L (2.0 GHz/6-core/15MB/8.0 GT/s QPI/60 W, DDR3-1333, HT, Turbo2- 3/3/4/4/5/5) **Performance Processors**[5] • Intel Xeon E5-2670 (2.6 GHz/8-core/20MB/8.0 GT/s QPI/115 W, DDR3-1600, HT, Turbo2-4/4/5/5/6/6/7/7) • Intel Xeon E5-2665 (2.4 GHz/8-core/20MB/8.0 GT/s QPI/115 W, DDR3-1600, HT, Turbo2- 4/4/5/5/6/6/7/7) • Intel Xeon E5-2660 (2.2 GHz/8-core/20MB/8.0 GT/s QPI/95 W, DDR3-1600, HT, Turbo2- 5/5/6/6/7/7/8/8) • Intel Xeon E5-2650 (2.0 GHz/8-core/20MB/8.0 GT/s QPI/95 W, DDR3-1600, HT, Turbo2- 4/4/5/5/5/7/8/8) • Intel Xeon E5-2650L (1.8 GHz/8-core/20MB/8.0 GT/s QPI/70 W, DDR3-1600, HT, Turbo2- 2/2/3/3/4/4/5/5) • Intel Xeon E5-2637 (3.0 GHz/2-core/5MB/8.0 GT/s QPI/80 W, DDR3-1600, HT, Turbo2- 5/5)
Cache Memory	• 30MB (1 x 30MB) Level 3 • 25MB (1 x 25MB) Level 3 • 20MB (1 x 20MB) Level 3 • 15MB (1 x 15MB) Level 3 • 10MB (1 x 10MB) Level 3 • 5MB (1 x 5MB) Level 3
Chipset	• Intel E5-2600 Processor FamilyIntel E5-2600 Processor Family • Intel E5-2600v2 Processor FamilyIntel E5-2600 Processor Family
Upgradeability	Upgradeable to two processors

Feature	Description
On System Management Processor	HP Integrated Lights-Out (iLO) (Firmware: HP iLO 4)
Memory Protection	Advanced Error-Correcting Code (ECC) (Multi-bit error protection)
Memory	

Type	HP SmartMemoryDDR3 Registered Dual in-line Memory module (RDIMM) or Unbuffered with ECC Dual in-line Memory Module (UDIMM)
dual in-line memory module (DIMM) Slots available	16 total DIMM Slots available
Maximum (RDIMM) (per server tray)	256GB (16 x 16GB) Registered memory configurations
Maximum (UDIMM) (per server tray)	128GB (16 x 8GB) Unbuffered memory configurations
Maximum Load Reduced Dual In-Line Memory Module (LRDIMM) (per server tray)	512GB (16 x 32GB) LRDIMM memory configurations

Feature	Description
Network Controller	HP Ethernet 1Gb 2-port 361i
Expansion Slots	

Expansion Slots	Technology	Bus Width [1]	Connector Width	Form Factor	Notes
Low-Profile (LP)	Peripheral Component Interconnect Express (PCIe) 3.0	x8	x8	Half-Length, Half-Height (HL/HH)	Front Panel Access

Feature	Description

Expansion Slots	Technology	Bus Width [1]	Connector Width	Form Factor	Notes
FlexibleLOM	PCIe 3.0	x16	x16	FlexibleLOM	Front Panel Access
GPU1 rear bottom	PCIe 3.0	x16	x16	Full-Length, Full Height (FL/FH)	GPU only
GPU2 rear top	PCIe 3.0	x16	x16	FL/FH	GPU only
GPU3 front top	PCIe 3.0	x16	x16	FL/FH	GPU only

NOTE

1. Indicates the number of physical electrical lanes running to the connector

HP Server Read Only Memory (ROM)

- HP ROM is digitally signed using HP's Corporate Signing Service, and the signature is verified before flashing to prevent accidental or malicious modification.
- It initializes and validates hardware components before transferring control to the Operating System (OS) and supports booting from Hard Disk Drive (HDD), Compact Disc Read-Only Memory (CD-ROM), and Universal Serial Bus (USB).
- During early startup, the ROM configures the video controller to display initialization progress. Any configuration or hardware errors are shown on the monitor and logged in the Integrated Management Log (IML) for diagnosis

HP's ProLiant ROM is used to configure the following:

- Processor and chipset status registers

<table>
<tr><th>Feature</th><th>Description</th></tr>
<tr><td></td><td>• System memory, memory map, and memory initialization
• System hardware configuration (Integrated PCI devices and optional PCIe cards).
• User-specific BIOS configuration (using the HP ROM-Based Setup Utility (RBSU).</td></tr>
<tr><td>Storage Controller</td><td>HP H220i Host Bus Adapter (HBA) (B320i Dynamic Smart Array with FW update)</td></tr>
<tr><td>Internal Storage Devices</td><td><table><tr><th>Drive Type</th><th>Support Details</th></tr><tr><td>Diskette Drives</td><td>Via USB through the Serial USB Video (SUV) port, external support only</td></tr><tr><td>Optical Drives</td><td>Via USB through the SUV port, external support only</td></tr><tr><td>Hard Drives</td><td>None ship standard</td></tr></table></td></tr>
<tr><td>Maximum internal storage</td><td><table><tr><th>Drive Configuration</th><th>Total Capacity</th><th>Drive Quantity × Capacity</th></tr><tr><td colspan="3">2U Half Width tray</td></tr><tr><td>Hot Plug Serial Attached SCSI (SAS) SFF</td><td>4.8TB</td><td>4 x 1.2TB</td></tr><tr><td>Hot Plug Serial Advanced Technology Attachment (SATA) SFF</td><td>4.0TB</td><td>4 x 1TB</td></tr><tr><td>Hot Plug SAS Solid State Drive (SSD) SFF</td><td>3.2TB</td><td>4 x 800GB</td></tr><tr><td>Hot Plug SATA SSD SFF</td><td>3.2TB</td><td>4 x 800GB</td></tr></table></td></tr>
</table>

Feature	Description

Drive Configuration	Total Capacity	Drive Quantity × Capacity
Quick Release SAS SFF	4.8TB	4 x 1.2TB
Quick Release SATA SFF	4.0TB	4 x 1TB
Quick Release SSD SAS SFF	2.4TB	4 x 600GB

NOTE

- The Non-Hot Plug Quick Release drives can only be used when implementing the internal SFF kit and not implementing the GPUs
- The SL250 SFF Internal Enablement Kit (PN: 679991-B21) allows for up to four SFF HDD to be implemented in place of the three GPUs.

Interfaces

Interface	Details
Network RJ-45 Flexible LOM	• Two 1 GbE or 10 GbE NIC ports • ProLiant Gen8 servers offer a new networking technology - Flexible Network Technology. The SL250 Gen8 server offers the user the choice of 1Gigabit, 10Gigabit or InfiniBand FlexibleLOM solutions depending on workload.

Feature	Description	
	Interface	**Details**
		For further details o n the choices, see Fl exibleLOM in the Ne tworking Section of t his document.
	KVM	SUV Port
	Micro SD	1 (internal)
	USB Ports	1 (internal)
	HP iLO Remote Manage ment Network Port	1Gb Dedicated
	Health LED	1 front
	Power	1 front
	UID	1 front
Industry Standard Compliance	• Advanced Configuration and Power Interface (ACPI) 2.0b Compliant • PCIe 3.0 Compliant • Wake-on-LAN (WOL) Support • Microsoft Logo certifications • Preboot eXecution Environment (PXE) Support • USB 1.1 and 2.0 Compliant • System Management Basic Input/Output (IO) System (SMBIOS) 2.6.1	
Server Power Cords	One 6 in Highline (International Electrotechnical Co mmission (IEC)-IEC) power cord ships standard	
Common Slot (CS) Power Supplies	• HP CS power supplies provide standardized po wer compatibility across ProLiant, Integrity serve rs, and HP Storage solutions. They deliver high e fficiency of up to **94% (80 Plus Platinum)** witho ut affecting system performance. • Available in **750 W, 1200 W, and 1500 W** opti ons, they support **hot-plug and redundant conf igurations** and are Underwriters Laboratories (UL) and Conformité Européenne (CE) compliant. HP recommends using the HP Power Advisor to	

Feature	Description
	select the appropriate power supply for specific server configurations.
System Fans	• HP s6500 Redundant Fan Kit • HP s6500 Non-Redundant Fan Kit
Graphics	• **Integrated Matrox G200 video standard** ◦ 1280 x 1024 (32 bp) ◦ 1920 x 1200 (16 bp) • **HP iLO 4 On System Management Memory** ◦ 16MB Flash ◦ 256MB DDR 3 with ECC (112MB after ECC and video)
Form Factor	• Fully configured SL250 is 2U, half-width • Fully configured SL6500 chassis is 4U, full-width
On System Management	**HP iLO Management Engine:** HP iLO Management Engine is a comprehensive set of embedded management features supporting the complete lifecycle of the server, from initial deployment, through ongoing management, to service alerting and remote support. HP iLO Management Engine comes standard on all HP ProLiant Gen8 servers. The HP iLO Management Engine portfolio includes: • **HP iLO:** The HP iLO management processor is the core foundation for the HP iLO Management Engine • **HP Agentless Management:** Provides built in server health monitoring and alerting capability without OS agents, that starts working the moment a power cord and an Ethernet cable are connected. • **HP Active Health System (AHS):** Always on, continuous monitoring for increased stability and shorter downtimes; 100% configuration history; Health and service alerts and easy export and upload to Service and Support • **HP Intelligent Provisioning:** Lets users provision and configure a single server without any sepa

Feature	Description
	rate media. No more SmartStart CDs or Smart U pdate Firmware DVD are needed. ◦ To start Intelligent Provisioning: - Press the F10 key during the ProLiant Gen8 server boot process (also known a s power on self test or POST). - Please go to the Intelligent Provisioning - Use the Service Pack for ProLiant (SPP) to get firmware and software updates • **HP iLO Mobile App:** Enables the ability to acces s, deploy, and manage your server anytime from anywhere from select smartphones and mobile d evices
HP Insight management	• **HP SPP** and **HP Smart Update Manager (HP S UM)** provide an integrated solution for firmware and system software updates, improving system stability and uptime. • SPP delivers tested firmware, drivers, and agents , while HP SUM provides a simple interface to dis cover, analyze, and deploy updates. Updates can be performed online and across multiple servers, ensuring faster deployment and consistent confi gurations. HP provides 12 months of support for each SPP release.
Security	• Power-on password • Keyboard password • QuickLock, Network Server Mode • Serial interface control • Administrator's password • iLO 4 has 12 customizable user accounts and SS L encryption • iLO 4 can be disabled via a Global Setting • iLO Advanced supports directory services integ ration
HP Insight management	• HP Insight Control • HP Matrix Operating Environment

Feature	Description
	• HP iLO Advanced • HP iLO Scale-Out • HP Matrix Operating Environment
High Performance Clusters	• HP Cluster Platforms • HP HPC Interconnects\ • HP Insight Cluster Management Utility
Storage Software	Whether you need to solve a specific data protection , archiving, or storage command and control challeng e, or deliver on strategic consolidation, compliance, o r continuity initiatives, look no further than HP stora ge software. Our storage software helps you reduce c osts, simplify storage infrastructure, protect vital ass ets and respond faster to business opportunities Storage software that gets the job done: • Data Protection and Recovery Software • Data Archive and Migration Software • Storage Resource Management Software (SRM) • Data Replication Software • Storage Device Management Software • HP StoreVirtual VSA
HP Insight Online	• HP Insight Online is a new addition to the HP Su pport Center for one stop, secure access to prod uct and HP support information personalized to your IT environment. • Insight Online can automatically display devices remotely monitored by HP Insight Remote Sup port. • With Insight Online's easy navigation you can eff iciently track your IT support contracts and devi ce status from anywhere and at anytime
Factory Express Portfolio for Servers and Storage	• **HP Factory Express** provides configuration, cu stomization, integration, and deployment servic es for HP servers and storage products. • It offers services such as system configuration, racking, installation, image loading, asset taggin g, and custom packaging, supporting a wide ran

Feature	Description
	ge of HP servers, storage systems, and networki ng solutions.
HP Simple Configurator	**SCE** is a guided self-service tool that helps sales and non-technical users create initial system configuratio ns in **3–5 minutes**. The configuration can then be se nt for further assistance or used in the ordering proc ess.
Computational and Graphics Accelerators	Each SL250s tray will accommodate up to three com putational or graphics accelerators, with options incl uding NVIDIA Tesla K20, K20x and K40 GPUs, NVIDI A GRID K2 GPUs, and Intel Xeon Phi 5110p and Intel Xeon Phi 7120p Coprocessors.

NOTE

1. All support up to 1333 MHz DDR3 memory speeds. Intel Xeon E5-2609 v2 (2.5 GHz/4 -core/10MB/6.4 GT/s QPI/80 W) Base Processors. All support up to1600 MHz DDR3 m emory speeds.
2. For 115 W Central Processing Unit (CPU) support, users must use the HP 1500 W CS P latinum Plus Hot Plug Power Supply Kit (684532-B21).
3. All support up to 1066 MHz memory speeds.
4. All support up to1333 MHz DDR3 memory speeds.
5. For 130 W CPU support and configuration, please contact your HP account team. For 1 15 W CPU support, users must use the HP 1500 W CS Platinum Plus Hot Plug Power S upply Kit (684532-B21). All support up to 1600 MHz DDR3 memory speeds.

    a. HT indicates that the processor model supports Intel HT Technology.
    b. Turbo indicates the maximum potential frequency increment when using Intel Turbo Boost Technology, with 8, 7, 6, 5, 4, 3, 2 or 1 core(s) active.
    c. DDR3 speed is the maximum memory speed of the processor. Actual memory speed may depend on the quantity and type of DIMMs installed.
    d. Up to 2 processors supported. Mixing different processor models is not supported.
    e. For the Intel C600 Chipset E5-2600 Series, the letter preceding the model number i ndicates the Product Line (E3, E5, E7); 2600x, 2 = number of CPUs in a Node, 6 is s ocket/segment designation, 00 = Processor Stock Keeping Unit (SKU) and x = L for l ow power SKUs

Technical Specifications

Specification	Description
HP Ethernet 1Gb 2-port 361i Adapter	
Network Interface	10Base-T/100Base-TX/1000Base-TX
Compatibility	• IEEE 802.3 10Base-T • IEEE 802.3ab 1000Base-T • IEEE 802.3u 100Base-TX • IEEE 1588, IEEE 802.1AS • IEEE 802.3az - Energy Efficient Ethernet (EEE)
Data Transfer Method	PCIe v 2.1, 5.0 GT/s and 2.5 GT/s bus speeds and supports for x1, x2, x4 links widths (Lanes
Controller	I350 Powerville
Network Transfer Rate (TR)	• **10Base-T (Half-Duplex) -** 10 Mb/s per port, 20 Mb/s Combined • **10Base-T (Full-Duplex) -** 20 Mb/s per port, 40 Mb/S Combined • **100Base-TX (Half-Duplex) -** 100 Mb/s per port, 200 Mb/s Combined • **100Base-TX (Full-Duplex) -** 200 Mb/s per port, 400 Mb/s Combined • **1000Base-TX (Half and Full-Duplex) -** 1000 Mb/s per port, 2000 Mb/s Combined
Connector	RJ-45
Cable Support	• **10Base-T -** Categories 3, 4 or 5 Unshielded Twisted Pair (UTP); up to 328 ft (100 m) • **10/100/1000Base-TX -** Category 5 UTP; up to 328 ft (100 m)
HP H220i HBA	
Disk Drive and Enclosure Interface - TR	• 6 Gb/s SAS • 6 Gb/s SATA
SAS Connectors	2 internal 4X connectors
Server Interface	x8 PCIe 3.0 provides 8 GB/s maximum bandwidth

Specification	Description
SAS Speed	6 Gb/s SAS links provide 4.8 GB/s maximum bandwid th
Cache Memory	None
Physical Drives Supported	Up to 8 physical drives
Hot Plug Support	Yes
RAID Support	None

Physical Specifications

Specification	Description
Dimensions (H x W x D) (with bezel)	17.68 x 44.8 x 89.55 cm (6.96 x 17.63 x 35.236 in)
Weight (Approximate)	**Maximum (all hard drives, power supply, and proc essor installed):** 99.8 kg (220 lb)

Environmental Specifications

Specification	Description
Operating temperature	10° to 35°C (50° to 95°F)
Non-operating temperature	-30° to 60°C (-22° to 140°F)
Operating relative humidity	10% to 90% non-condensing
Non-operating relative humidity	5% to 95% non-condensing
Operating altitude	3048 m (10,000 ft)
Non-operating altitude	9144 m (30,000 ft)
Acoustic noise	Listed are the declared A-Weighted sound power l evels (LWAd) and declared average bystander positi on A-Weighted sound pressure levels (LpAm) when t he product is operating in a 23°C ambient environm

Specification	Description
	ent. Noise emissions were measured in accordance w ith ISO 7779 (ECMA 74) and declared in accordance with ISO 9296 (ECMA 109). • **Idle:** ◦ LWAd - 6.4 ◦ LpAm - 45 dBA • **Operating:** ◦ LWAd - 6.7 ◦ LpAm - 51 dBA

Electrical Specifications

Specification	Description
Rated line voltage	• 90 to 140 V ac • 180 to 264 V ac
Rated input current	• 7.31 A (at 115 V ac) • 3.6 A (at 230 V ac)
Rated input frequency	47 to 63 Hz
Rated input power	• 855 W (at 100 V ac) • 840.72 W (at 200 V ac)
Rated Steady-State power	• 653.10 W (at 100 V ac) • 653.08 W (at 200 V ac)
Power Supply Output	**Rated Steady-State Power:** • 653.10 W (at 100 V ac),

Specification	Description
	• 653.08 W (at 200 V ac)

Safety Certifications

Specification	Description
Emissions Classification	**Federal Communications Commission (FCC) Rating:** Class A
	Normative standards: CISPR 22; EN55022; EN55024; FCC CFR 47, Pt 15; ICES-003; CNS13438; GB9254; K22;K24; EN 61000-3-2; EN 61000-3-3; EN 60950-1; IEC 60950-1

NOTE

Product conformance to cited product specifications is based on sample (type) testing, evaluation, or assessment. This product or family of products is eligible to bear the appropriate compliance logos and statements.

Spare Parts

Subtopics

New model specific parts lists
Server Components

New model specific parts lists

IMPORTANT: To obtain current part number information for a specific product model, use the Standard Models page for this product family.

- The product Standard Models page now links the model SKU numbers to the spare parts list for each model found on the HP PartSurfer web site. (To report missing or incorrect parts information in

PartSurfer, please use the "Contact us" and "Missing or incorrect data" links within the PartSurfer web site utility).

- To look up RoHS-compliant information in PartSurfer, use the component's option part number or the sales order number for a system in which the component is used (available in the QuickSpecs or Standard Models page).

Server Components

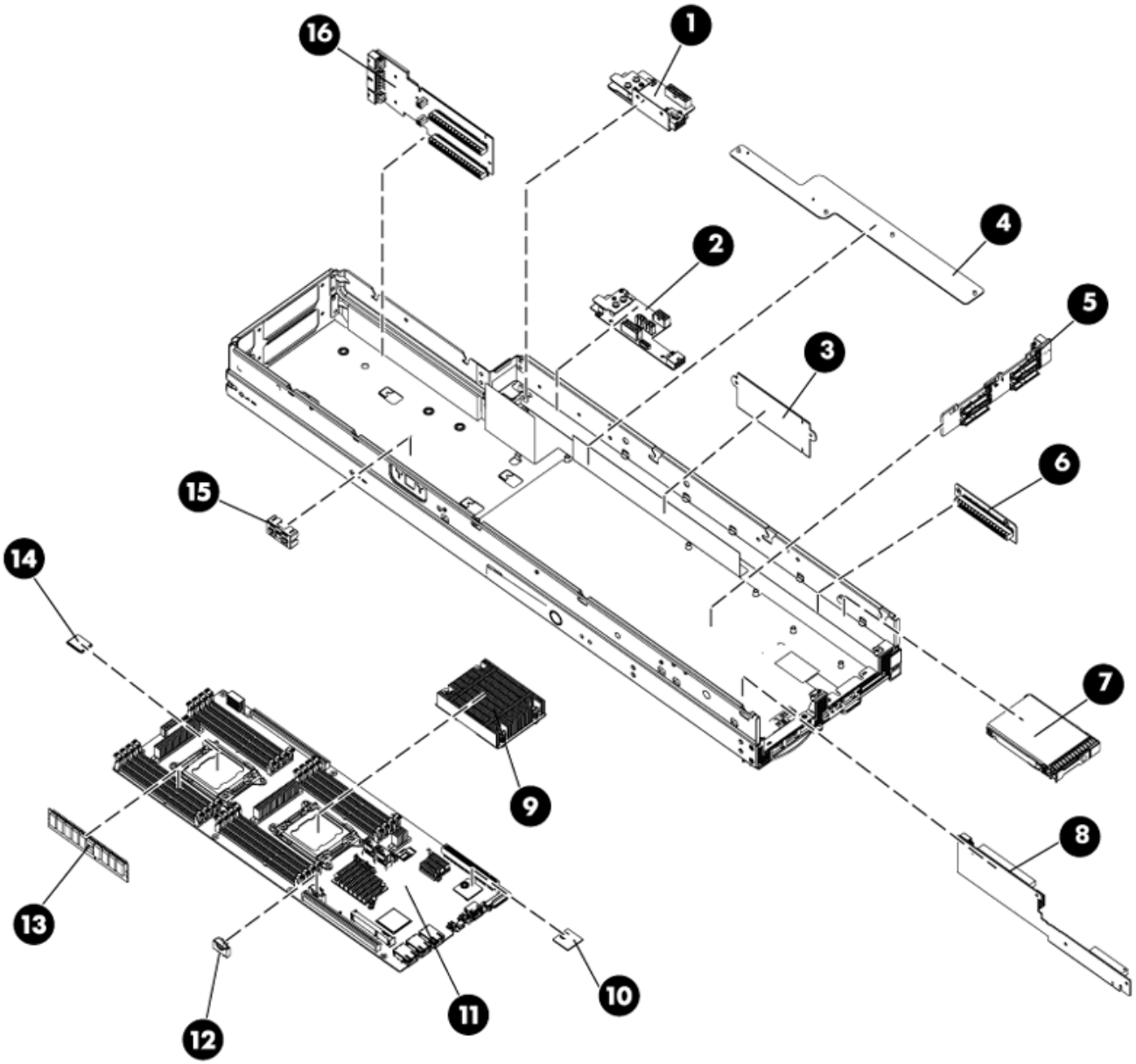

Item	Part Description	Spare Part Number
1	**Level 2 power boards with brackets**	
	a) Right board for L2/GPU power with bracket	669753-001
	b) Left board for L2/GPU power wi th bracket	669752-001
2	**Personality boards**	
	a) Right personality board	669755-001
	b) Left personality board	739873-001
3	PCA riser x32	669740-001
4	GPU interposer board	739872-001
5	Backplane board for hard drive dis k	671914-001
6	PE3 24X riser board - 2U form fa ctor	700573-001
7	**HP SFF, 2.5-in, hot-plug drive**	
	SATA SSD	
	32GB hot-plug SSD - SATA interfa ce, 1.5 Gb/s TR, 2.5-in SFF, Entry	461332-001
	60GB hot-plug SSD - SATA interfa ce, 3 Gb/s TR, 2.5-in SFF, Midline (MDL)	572252-001
	60GB, 6G, Multi-Level Cell (MLC) SSD	676615-001
	64GB hot-plug SSD - SATA interfa ce, 1.5 Gb/s TR, 2.5-in SFF, Entry	461333-001
	100GB hot-plug SSD - SATA inter face, 3 Gb/s TR, 2.5-in SFF, MLC, e nterprise mainstream	637070-001

Item	Part Description	Spare Part Number
	100GB hot-plug SSD - SATA interface, 3 Gb/s TR, 2.5-in SFF, MLC, SmartDrive Carrier (SC)	653965-001
	120GB hot-plug SATA hard disk drive - 5,400 Revolutions Per Minute (RPM), 1.5 Gb/s TR, 2.5-in SFF, Entry	459322-001
	120GB hot-plug SSD - SATA interface, 3 Gb/s TR, 2.5-in SFF, MDL	572253-001
	200GB hot-plug SSD - SATA interface, 3 Gb/s TR, 2.5-in SFF, MLC, SC	653966-001
	SATA hard drives	
	60GB hot-plug SATA hard disk drive - 5,400 RPM, 1.5 Gb/s TR, 2.5-in SFF	405419-001
	120GB hot-plug SATA hard disk drive - 5,400 RPM, 1.5 Gb/s TR, 2.5-in SFF	431908-001
	160GB hot-plug SATA hard disk drive - 7,200 RPM, 3 Gb/s TR, 2.5-in SFF, MDL	530932-001
	500GB hot-plug SATA hard disk drive - 7,200 RPM, 3 Gb/s TR, 2.5-in SFF, MDL	508035-001
	500GB hot-plug SATA hard disk drive - 7,200 RPM, 6 Gb/s TR, 2.5-in SFF, MDL, SC	656107-001
	1TB hot-plug SATA hard disk drive - 7,200 RPM, 3 Gb/s TR, 2.5-in SFF, MDL	626162-001
	1TB, 3G, 7,200 rpm, MDL drive	656105-001
	1TB hot-plug SATA hard disk drive - 7,200 RPM, 6 Gb/s TR, 2.5-in SFF, MDL, SC - Not for use in Modular Smart Array (MSA) products	656108-001

Item	Part Description	Spare Part Number
	1TB SATA HDD - 7,200 RPM, MDL	659167-001
	1TB Hard Drive Disk - 7,200 RPM, MDL	659168-001
	SAS SSD	
	200GB hot-plug SSD - SAS interface, 6 Gb/s TR, 2.5-in SFF, Single-Level Cell (SLC), SC	653961-001
	100GB, SLC SSD	657277-001
	100GB, MLC SSD	657280-001
	200GB, SLC SSD	657278-001
	200GB hot-plug SSD - SAS interface, 6 Gb/s TR, 2.5-in SFF, MLC, Enterprise Mainstream, SC	658580-001
	200GB, MLC SSD	657281-001
	400GB hot-plug SSD - SAS interface, 6 Gb/s TR, 2.5-in SFF, SLC, SC	653962-001
	400GB, SLC SSD	657279-001
	400GB, MLC SSD	657282-001
	800GB, MLC SSD	657283-001
	400GB hot-plug SSD - SAS interface, 6 Gb/s TR, 2.5-in SFF, MLC, SC	653963-001
	SAS hard drives	
	72GB hot-plug dual-port SAS hard disk drive - 15,000 RPM, 6 Gb/s TR, 2.5-in SFF, Enterprise, SC - Not for use in MSA products	653949-001
	146GB hot-plug single-port SAS hard disk drive - 10,000 RPM, 3 Gb/s TR, 2.5-in SFF	432320-001
	146GB hot-plug dual-port SAS hard disk drive - 10,000 RPM, 3 Gb/s TR, 2.5-in SFF, Enterprise	418399-001

Item	Part Description	Spare Part Number
	146GB hot-plug dual-port SAS hard disk drive - 15,000 RPM, 3 Gb/s TR, 2.5-in SFF, Enterprise	504334-001
	146GB hot-plug dual-port SAS hard disk drive - 10,000 RPM, 6 Gb/s TR, 2.5-in SFF, Enterprise	507283-001
	146GB hot-plug dual-port SAS hard disk drive - 15,000 RPM, 6 Gb/s TR, 2.5-in SFF, Enterprise, SC - Not for use in MSA products	653950-001
	146GB hot-plug dual-port SAS hard disk drive - 15,000 RPM, 6 Gb/s TR, 2.5-in SFF, Enterprise	512744-001
	300GB hot-plug dual-port SAS hard disk drive - 10,000 RPM, 3 Gb/s TR, 2.5-in SFF, Enterprise	493083-001
	300GB hot-plug dual-port SAS hard disk drive - 10,000 RPM, 6 Gb/s TR, 2.5-in SFF, Enterprise	507284-001
	300GB hot-plug dual-port SAS hard disk drive - 10,000 RPM, 6 Gb/s TR, 2.5-in SFF, Enterprise, SC - Not for use in MSA products	653955-001
	300GB hot-plug dual-port SAS hard disk drive - 15,000 RPM, 6 Gb/s TR, 2.5-in SFF, Enterprise, SC - Not for use in MSA products	653960-001
	450GB hot-plug dual-port SAS hard disk drive - 10,000 RPM, 6 Gb/s TR, 2.5-in SFF, Enterprise	581310-001
	450GB hot-plug dual-port SAS hard disk drive - 10,000 RPM, 6 Gb/s TR, 2.5-in SFF, Enterprise, SC - Not for use in MSA products	653956-001
	500GB hot-plug dual-port SAS hard disk drive - 7,200 RPM, 6 Gb/s TR, 2.5-in SFF, MDL, SC - Not for use in MSA products	653953-001

Item	Part Description	Spare Part Number
	500GB hot-plug dual-port SAS hard disk drive - 7,200 RPM, 6 Gb/s TR, 2.5-in SFF, MDL	508009-001
	600GB hot-plug dual-port SAS hard disk drive - 10,000 RPM, 6 Gb/s TR, 2.5-in SFF, Enterprise, SC - Not for use in MSA products	653957-001
	600GB hot-plug dual-port SAS hard disk drive - 10,000 RPM, 6 Gb/s TR, 2.5-in SFF, Enterprise	581311-001
	900GB hot-plug dual-port SAS hard disk drive - 10,000 RPM, 6 Gb/s TR, 2.5-in SFF, Enterprise, SC - Not for use in MSA products	653971-001
	1TB hot-plug dual-port SAS hard disk drive - 7,200 RPM, 6 Gb/s TR, 2.5-in SFF, MDL	606020-001
	1TB hot-plug dual-port SAS hard disk drive - 7,200 RPM, 6 Gb/s TR, 2.5-in SFF, MDL, SC - Not for use in MSA products	653954-001
8	GPU board - 24-port, LP, 2U form factor	671915-001
9	**Heatsink**	
	a) SL200 series Virtual Connect (VC) processor heatsink - Includes alcohol pad and heatsink installation card	709990-001
	b) SL200 series VC processor heatsink - Includes alcohol pad and heatsink installation card	709991-001
10	Trusted Platform Module	450168-001
11	Enhanced motherboard (system board) - For use with SL230/250/270	741758-001

Item	Part Description	Spare Part Number
	I/O system board - Includes password tag card, processor alcohol pad, thermal grease syringe, blank CPU holder, processor dust cover label, thermal grease application card	669290-001
	System board (motherboard)	802611-001
	System board (include alcohol pad and thermal compound)	733171-001
12	Battery for Real-Time Clock (RTC) - 3.0 V, 200 mAh, lithium disc cell, 20 mm diameter, 3.2 mm height (CR2032)	234556-001
13	**Memory**	
	2GB, 1333 MHz, PC3L-10600E-9, DDR3, single-rank x8, 1.35 V, UDIMM	664694-001
	4GB, 1333 MHz, PC3L-10600E-9, DDR3, dual-rank x8, 1.35 V, UDIMM	664695-001
	4GB, 1333 MHz, PC3L-10600R-9, DDR3, single-rank x4, 1.35 V, RDIMM	664688-001
	4GB, 1600 MHz, PC3-12800R-11, DDR3, Single-Rank x4, 1.50 V, registered DIMM	664689-001
	8GB, 1333 MHz, PC3L-10600E-9, DDR3, dual-rank x8, 1.35 V, UDIMM	664696-001
	8GB, 1600 MHz, PC3-12800R-11, DDR3, single-rank x4, 1.50 V, registered DIMM	664691-001
	16GB, 1333 MHz, PC3L-10600R-9, DDR3, dual-rank x4, 1.35 V, RDIMM	664692-001

Item	Part Description	Spare Part Number
	32GB, 1333 MHz, PC3L-10600L-9, DDR3, Quad-Rank x4, 1.35 V, LR DIMM	664693-001
14	**Processors**	
	Intel Xeon E5-2650L v2 Ten-Core 64-bit low-power processor - 1.70 GHz (Ivy Bridge-EP, 25MB Level-3 cache, Intel QPI speed 8.0 GT/s, 70 W Thermal Design Power (TDP), socket FCLGA 2011)	730250-001
	Intel Xeon E5-2620 v2 Six-Core 64-bit processor - 2.10 GHz (Ivy Bridge-EP, 15MB Level-3 cache, Intel QPI speed 7.2 GT/s, 80 W TDP, socket FCLGA 2011)	730241-001
	Intel Xeon E5-2660 v2 Ten-Core 64-bit processor - 2.20 GHz (Ivy Bridge-EP, 25MB Level-3 cache, Intel QPI speed 8.0 GT/s, 95 W TDP, socket FCLGA 2011)	730237-001
	Intel Xeon E5-2695 v2 Twelve-Core 64-bit processor - 2.40 GHz (Ivy Bridge-EP, 30MB Level-3 cache, Intel QPI speed 8.0 GT/s, 115 W TDP, socket FCLGA 2011)	730246-001
	Intel Xeon E5-2609 v2 Quad-Core 64-bit processor - 2.50 GHz (Ivy Bridge-EP, 10MB Level-3 cache, Intel QPI speed 6.4 GT/s, 80 W TDP, socket FCLGA 2011)	730242-001
	Intel Xeon E5-2670 v2 Ten-Core 64-bit processor - 2.50 GHz (Ivy Bridge-EP, 25MB Level-3 cache, Intel QPI speed 8.0 GT/s, 115 W TDP, socket FCLGA 2011)	730236-001
	Intel Xeon E5-2630 v2 Six-Core 64-bit processor - 2.60 GHz (Ivy Bridge-EP, 15MB Level-3 cache, Intel QPI speed 7.2 GT/s, 80 W TDP, socket FCLGA 2011)	730240-001

Item	Part Description	Spare Part Number
	Intel Xeon E5-2650 v2 Eight-Core 64-bit processor - 2.60 GHz (Ivy Bridge-EP, 20MB Level-3 cache, Intel QPI speed 8.0 GT/s, 95 W TDP, socket FCLGA 2011)	730238-001
	Intel Xeon E5-2697 v2 Twelve-Core 64-bit processor - 2.70 GHz (Ivy Bridge-EP, 30MB Level-3 cache, Intel QPI speed 8.0 GT/s, 130 W TDP, socket FCLGA 2011)	730245-001
	Intel Xeon E5-2680 v2 Ten-Core 64-bit processor - 2.80 GHz (Ivy Bridge-EP, 25MB Level-3 cache, Intel QPI speed 8.0 GT/s, 115 W TDP, socket FCLGA 2011)	730235-001
	Intel Xeon E5-2643 v2 Six-Core 64-bit processor - 3.50 GHz (Ivy Bridge-EP, 25MB Level-3 cache, Intel QPI speed 8.0 GT/s, 130 W TDP, socket FCLGA 2011)	730248-001
	Intel Xeon E5-2637 v2 Quad-Core 64-bit processor - 3.5 GHz (Ivy Bridge-EP, 15MB Level-3 cache, Intel QPI speed 8.0 GT/s, 130 W TDP, socket FCLGA 2011)	730249-001
	Intel Xeon Phi 5110P 60 Core coprocessor - 1.053 GHz (Knights Corner, 30MB Level-3 cache)	708360-001
	Intel Xeon E5-2680 Eight-Core 64-bit processor - 2.70 GHz (Sandy Bridge-EP, 20MB Level-3 cache, Intel QPI speed 8.0 GT/s, 130 W TDP, FCLGA 2011-pin socket)	670522-001
	Intel Xeon E5-2670 Eight-Core 64-bit processor - 2.60 GHz (Sandy Bridge-EP, 20MB Level-3 cache, Intel QPI speed 8.0 GT/s, 115 W TDP, FCLGA 2011-pin socket)	670523-001
	Intel Xeon E5-2665 Eight-Core 64-bit processor - 2.40 GHz (Sandy Bridge-EP, 20MB Level-3 cache, In	670524-001

Item	Part Description	Spare Part Number
	tel QPI speed 8.0 GT/s, 115 W TD P, FCLGA 2011-pin socket)	
	Intel Xeon E5-2660 Eight-Core 64 -bit processor - 2.20 GHz (Sandy Bridge-EP, 20MB Level-3 cache, In tel QPI speed 8.0 GT/s, 95 W TDP, FCLGA 2011-pin socket)	670525-001
	Intel Xeon E5-2650 Eight-Core 64 -bit processor - 2.00 GHz (Sandy Bridge-EP, 20MB Level-3 cache, In tel QPI speed 8.0 GT/s, 95 W TDP, FCLGA 2011-pin socket)	670526-001
15	Flash-Backed Write Cache (FBWC) capacitor pack holder	669291-001
16	Rear riser for GPU board	671916-001
17	Power cable for GPU	669742-001
18	RPS cables	
	a) Left node	693516-001
	b) Right node	733176-001
19	Drive backplane power cables	
	a) Left node	669747-001
	b) Right node	669748-001
20	Power capping cable - GPU, 39 cm (15.35 in) long	708916-001
21	Cable for SAS hard drive disk back plane	669746-001
22	x32 GPU cable	
	a) Left cable	669741-001
	b) Right cable	671912-001
23	Controller cable - With U-type con nector, 2U form factor	680665-001

Item	Part Description	Spare Part Number
24	PCI power cables, rear GPU cage	
	a) Right node	669751-001
	b) Left node	669749-001
25	System board power cables	
	a) Left node	669741-001
	b) Right node	671912-001
26	Cable assembly - SFF	683701-001
27	**HP SFF, 2.5-in, QuickRelease Carrier (QRC)drives**	
	SAS drive	
	300.0GB dual-port SAS hard disk drive - 10,000 RPM, 6 Gb/s TR, 2.5-in SFF, QuickRelease, Enterprise	575055-001
	SATA SSD	
	60GB, 3G, MLC SSD	676306-001
	60GB SATA SSD - 3 Gb/s TR, 2.5-in form factor, SFF, Quick Release, MDL	586656-001
	100GB SSD - SATA interface, 3 Gb/s TR, 2.5-in SFF, QRC, MLC, MDL	637066-001
	120GB SATA SSD - 3 Gb/s TR, 2.5-in SFF, Quick Release, MDL	586657-001
	120GB, 3G, MLC SSD	676310-001
	120GB, 6G, MLC SSD	676621-001
	200GB SSD - SATA interface, 3 Gb/s TR, 2.5-in SFF, QRC, MLC, MDL	637067-001
	240GB, 6G, MLC SSD	676625-001
	400GB SSD - SATA interface, 3 Gb/s TR, 2.5-in SFF, QRC MLC, MDL	637068-001
	SATA hard drives	

Item	Part Description	Spare Part Number
	160GB SATA hard drive - 7,200 RPM, 3 Gb/s TR, 2.5-in SFF, QRC, MDL	575053-001
	500GB SATA hard disk drive - 7,200 RPM, 3 Gb/s TR, 2.5-in form factor, QuickRelease, MDL	575054-001
	500GB SATA hard disk drive - 7,200 RPM, 6 Gb/s TR, 2.5-in SFF - Quick Restore, MDL	632142-001
	1.0TB SATA hard drive - 7,200 RPM, 3 Gb/s TR, 2.5-in SFF, QRC, MDL	627801-001
	1TB SATA hard disk drive - 7,200 RPM, 6 Gb/s TR, 2.5-in SFF - Quick Restore, MDL	632143-001

Option Parts

Subtopics

- **New model specific parts lists**
- **Accelerator Options**
- **Care Pack Services**
- **Cloudera Licensing**
- **Disk Storage Systems**
- **FlexibleLOM Adapters**
- **GPU Computing Modules**
- **Hard Drives**
- **High Performance Clusters**
- **InfiniBand**
- **Insight software**
- **iLO**
- **Memory**
- **Networking**
- **Processors**
- **Power Distribution Unit (PDU)**
- **Power Supply**
- **Racks**

Server Nodes
Storage Controllers
Tape backup
Uninterruptible Power System (UPS)
Unique Options
USB and SD options

New model specific parts lists

IMPORTANT: To obtain current part number information for a specific product model, use the Standard Models page for this product family.

- The product Standard Models page now links the model SKU numbers to the spare parts list for each model found on the HP PartSurfer web site. (To report missing or incorrect parts information in PartSurfer, please use the "Contact us" and "Missing or incorrect data" links within the PartSurfer web site utility).
- To look up RoHS-compliant information in PartSurfer, use the component's option part number or the sales order number for a system in which the component is used (available in the QuickSpecs or Standard Models page).

Accelerator Options

Description	Option Part Number
HP I/O Accelerator options	
HP 365GB MLC G2 PCIe ioDrive2 for ProLiant Servers	673642-B21
HP 785GB MLCG2 PCIe ioDrive2 for ProLiant Servers	673644-B21
HP 1205GB MLC G2 PCIe ioDrive2 for ProLiant Servers	673646-B21
HP PCIe Workload Accelerator options	
HP 1.4TB Half Height/Half Length (HH/HL) Mainstream Endurance (ME) PCIe Workload Accelerator	729307-B21
HP 700GB HH/HL ME PCIe Workload Accelerator	729305-B21
HP 350GB HH/HL PCIe Workload Accelerator for ProLiant Servers	708088-B21

Description	Option Part Number
HP 700GB HH/HL PCIe Workload Accelerator for ProLiant Servers	708090-B21
Value Endurance (VE) PCIe Workload Accelerators	
HP 1.3TB HH/HL VE PCIe Workload Accelerator	763834-B21
HP 1.6TB HH/HL VE PCIe Workload Accelerator	763836-B21
HP 3.2TB HH/HL VE PCIe Workload Accelerator	763838-B21
HP 6.4TB FH/HL VE PCIe Workload Accelerator	763840-B21

Care Pack Services

Description	Option Part Number
HP 3 yr 24x7 24 hour Call to Repair ProLiant s6500 Hardware Support	UR425E
HP 3 yr 24x7 24 hour Call to Repair with Defective Media Retention ProLiant s6500 Hardware Support	UR426E
HP 3 yr 4 hour 13x5 ProLiant s6500 Hardware Support	UR400E
HP 3 yr 4 hour 13x5 with Defective Media Retention ProLiant s6500 Hardware Support	UR401E
HP 3 yr 4 hour 24x7 ProLiant s6500 Hardware Support	UR402E
HP 3 yr 4 hour 24x7 with Defective Media Retention ProLiant s6500 Hardware Support	UR403E
HP 3 yr 6 hour 24x7 Call to Repair ProLiant s6500 Hardware Support	UR404E
HP 3 yr 6 hour 24x7 Call to Repair with Defective Media Retention s6500 Hardware Support	UR405E
HP 3 yr Next business day ProLiant s6500 Hardware Support	UR398E
HP 3 yr Next business day with Defective Media Retention ProLiant s6500 Hardware Support	UR399E
HP 3 yr 4 hour 24x7 ProLiant s6500 Collaborative Support	U1M52E
HP 3 yr 4 hour 24x7 ProLiant s6500 Proactive Care Service	U3C72E

Description	Option Part Number
HP 3 yr Next business day ProLiant s6500 Collaborative Support	U1M46E
HP 3 yr Next business day ProLiant s6500 Proactive Care Service	U3C66E
HP 4 yr 24x7 24 hour Call to Repair ProLiant s6500 Hardware Support	UR427E
HP 4 yr 24x7 24 hour Call to Repair with Defective Media Retention ProLiant s6500 Hardware Support	UR428E
HP 4 yr 4 hour 13x5 ProLiant s6500 Hardware Support	UR408E
HP 4 yr 4 hour 13x5 with Defective Media Retention ProLiant s6500 Hardware Support	UR409E
HP 4 yr 4hour 24x7 ProLiant s6500 Hardware Support	UR410E
HP 4 yr 4 hour 24x7 with Defective Media Retention ProLiant s6500 Hardware Support	UR411E
HP 4 yr 6 hour 24x7 Call to Repair ProLiant s6500 Hardware Support	UR412E
HP 4 yr 6 hour Call to Repair 24x7 with Defective Media Retention ProLiant s6500 Hardware Support	UR413E
HP 4 yr Next business day ProLiant s6500 Hardware Support	UR406E
HP 4 yr Next business day with Defective Media Retention ProLiant s6500 Hardware Support	UR407E
HP 5 yr 24x7 24 hour Call to Repair ProLiant s6500 Hardware Support	UR429E
HP 5 yr 24x7 24 hour Call to Repair with Defective Media Retention ProLiant s6500 Hardware Support	UR430E
HP 5 yr 4 hour 13x5 ProLiant s6500 Hardware Support	UR416E
HP 5 yr 4 hour 13x5 with Defective Media Retention ProLiant s6500 Hardware Support	UR417E
HP 5 yr 4 hour 24x7 ProLiant s6500 Hardware Support	UR418E
HP 5 yr 4 hour 24x7 with Defective Media Retention ProLiant s6500 Hardware Support	UR419E
HP 5 yr 6 hour 24x7 Call to Repair ProLiant s6500 Hardware Support	UR420E

Description	Option Part Number
HP 5 yr 6 hour 24x7 Call to Repair with Defective Media Retention s6500 Hardware Support	UR421E
HP 5 yr Next business day ProLiant s6500 Hardware Support	UR414E
HP 5 yr Next business day with Defective Media Retention ProLiant s6500 Hardware Support	UR415E

Cloudera Licensing

Description	Option Part Number
Cloudera Licenses Available for SL250 Server	
Cloudera Ent Basic Ed 1 yr 24x7 Phys License	G7M27A
Cloudera Ent Basic Ed 1 yr 24x7 Electronic License To Use (E-LTU)	G7M27AAE
Cloudera Ent Basic Ed 1 yr 8x5 Phys License	G7M28A
Cloudera Ent Basic Ed 1 yr 8x5 E-LTU	G7M28AAE
Cloudera EDH Ed 1 yr 24x7 Phys License	G7M29A
Cloudera EDH Ed 1 yr 24x7 E-LTU	G7M29AAE
Cloudera EDH Ed 1 yr 8x5 Phys License	G7M30A
Cloudera EDH Ed 1 yr 8x5 E-LTU	G7M30AAE
Cloudera EDH Ed 1 yr 24x7 Premium E-LTU	G7M31AAE

Disk Storage Systems

Description	Option Part Number
Disk Enclosures	
HP D2600 w/12 4TB 6G SAS 7.2K Large Form Factor (LFF) Dual Port MDL HDD 48TB Bundle	E7W32A

FlexibleLOM Adapters

Description	Option Part Number
HP Ethernet 1Gb 4-port 331FlexibleLOM for Rack (FLR) Adapter	629135-B21
HP Ethernet 1Gb 4-port 366FLR Adapter	665240-B21
HP FlexFabric 10Gb 2-port 526FLR-Small Form-factor Pluggable Plus (SFP+) Adapter	629138-B21
HP Ethernet 10Gb 2-port 530FLR-SFP+ Adapter	647581-B21
HP FlexFabric 10Gb 2-port 533FLR-T Adapter	700759-B21
HP FlexFabric 10Gb 2-port 534FLR-SFP+ Adapter	700751-B21
HP FlexFabric 10Gb 2-port 554FLR-SFP+ Adapter	629142-B21
HP Ethernet 10Gb 2-port 560FLR-SFP+ Adapter	665243-B21
HP Ethernet 10Gb 2-port 561FLR-T Adapter	700699-B21

GPU Computing Modules

Description	Option Part Number
NVIDIA Tesla M2075 6GB Computational Module	A0R41A
NVIDIA Tesla M2090 6GB Module	A0J99A
NVIDIA Tesla K10 Dual GPU PCIe Module	B3M66A
NVIDIA Tesla K10 Rev B Dual GPU PCIe Computational Accelerator	E5V47A
NVIDIA Tesla K20 5GB Computational Accelerator	C7S14A
NVIDIA Tesla K20X 6GB Computational Accelerator	C7S15A
NVIDIA Tesla K40 12GB Computational Accelerator	F1R08A
NVIDIA GRID K2 Dual GPU PCIe Graphics Accelerator	729851-B21
Intel Xeon Phi 5110P (8GB/225 W) Coprocessor Kit	C1P87A
Intel Xeon Phi 7120P (16GB/300 W) Coprocessor Kit	E2M34A

Hard Drives

Description	Option Part Number
HP 1.2TB 6G SAS 10K-rpm SFF (2.5-in) SC Enterprise 3 yr Warranty Hard Drive	697574-B21
HP 900GB 6G SAS 10K-rpm SFF (2.5-in) SC Enterprise 3 yr Warranty Hard Drive	652589-B21
HP 600GB 6G SAS 10K-rpm SFF (2.5-in) SC Enterprise 3 yr Warranty Hard Drive	652583-B21
HP 450GB 6G SAS 10K-rpm SFF (2.5-in) SC Enterprise 3 yr Warranty Hard Drive	652572-B21
HP 300GB 6G SAS 10K-rpm SFF (2.5-in) SC Enterprise 3 yr Warranty Hard Drive	652564-B21
HP 300GB 6G SAS 15K-rpm SFF (2.5-in) SC Enterprise 3 yr Warranty Hard Drive	652611-B21
HP 146GB 6G SAS 15K-rpm SFF (2.5-in) SC Enterprise 3 yr Warranty Hard Drive	652605-B21
HP 1TB 6G SAS 7.2K-rpm SFF (2.5-in) SC MDL 1 yr Warranty Hard Drive	652749-B21
HP 500GB 6G SAS 7.2K-rpm SFF (2.5-in) SC MDL 1 yr Warranty Hard Drive	652745-B21
HP 1.2TB 6G SAS 10K-rpm SFF (2.5-in) Quick-release Dual Port Enterprise 3 yr Warranty Hard Drive	697572-B21
HP 1.2TB 6G SAS 10K rpm SFF (2.5-in) Quick Release Dual Port ENT 3 yr Warranty Hard Drive	718164-B21
HP 300GB 6G SAS 10K-rpm SFF (2.5-in) Quick-release Dual Port Enterprise 3 yr Warranty Hard Drive	574879-B21
HP 1TB 6G SATA 7.2K-rpm SFF (2.5-in) SC MDL 1 yr Warranty Hard Drive	655710-B21
HP 500GB 6G SATA 7.2K-rpm SFF (2.5-in) SC MDL 1 yr Warranty Hard Drive	655708-B21
HP 1TB 6G SATA 7.2K-rpm SFF (2.5-in) Quick Release MDL 1 yr Warranty Hard Drive	632080-B21
HP 500GB 6G SATA 7.2K-rpm SFF (2.5-in) Quick Release MDL 1 yr Warranty Hard Drive	632078-B21
HP 400GB 6G SAS SLC SFF (2.5-in) SC Enterprise Performance 3 yr Warranty SSD	653082-B21

Description	Option Part Number
HP 200GB 6G SAS SLC SFF (2.5-in) SC Enterprise Performance 3 yr Warranty SSD	653078-B21
HP 120GB 6G SATA VE SFF 2.5-in SC Enterprise Boot 3 yr Wty SSD	717965-B21
HP 80GB 6G SATA VE SFF 2.5-in SC Enterprise Boot 3 yr Warranty SSD	734360-B21
6G SATA ME Hot Plug SFF (2.5-in) Enterprise Mainstream SSD	
HP 800GB 6G SATA ME SFF 2.5-in SC Enterprise Mainstream 3 yr Warranty SSD	691868-B21
HP 400GB 6G SATA ME SFF 2.5-in SC Enterprise Mainstream 3 yr Warranty SSD	691866-B21
HP 200GB 6G SATA ME SFF 2.5-in SC Enterprise Mainstream 3 yr Warranty SSD	691864-B21
HP 100GB 6G SATA ME SFF 2.5-in SC Enterprise Mainstream 3 yr Warranty SSD	691862-B21
HP 800GB 6G SAS ME SFF 2.5-in SC Enterprise Mainstream 3 yr Warranty SSD	690829-B21
HP 400GB 6G SAS ME SFF 2.5-in SC Enterprise Mainstream 3 yr Warranty SSD	690827-B21
HP 200GB 6G SAS ME SFF 2.5-in SC Enterprise Mainstream 3 yr Warranty SSD	690825-B21
6G SATA VE Quick Release SFF (2.5-in) Enterprise Boot SSD	
HP 120GB 6G SATA VE SFF 2.5-in Quick-release Enterprise Boot 3 yr Warranty SSD	718174-B21
HP 80GB 6G SATA VE SFF 2.5-in Quick-release Enterprise Boot 3 yr Warranty SSD	734364-B21
6G SATA VE Quick Release SFF (2.5-in) Enterprise Value SSDs	
HP 800GB 6G SATA VE SFF 2.5-in Quick-release Enterprise Value 3 yr Warranty SSD	718192-B21
HP 600GB 6G SATA VE SFF 2.5-in Quick-release Enterprise Value 3 yr Wty SSD	739902-B21
HP 480GB 6G SATA VE SFF 2.5-in Quick-release Enterprise Value 3 yr Warranty SSD	718186-B21
HP 300GB 6G SATA VE SFF 2.5-in Quick-release Enterprise Value 3 yr Wty SSD	739892-B21
HP 240GB 6G SATA VE SFF 2.5-in Quick-release Enterprise Value 3 yr Warranty SSD	718180-B21
6G SATA ME Quick Release SFF (2.5-in) Enterprise Mainstream SSD	

Description	Option Part Number
HP 800GB 6G SATA ME SFF 2.5-in QR Enterprise Mainstream 3 yr Warranty SSD	730057-B21
HP 400GB 6G SATA ME SFF 2.5-in QR Enterprise Mainstream 3 yr Warranty SSD	730055-B21
HP 200GB 6G SATA ME SFF 2.5-in QR Enterprise Mainstream 3 yr Warranty SSD	730053-B21
HP 100GB 6G SATA ME SFF 2.5-in QR Enterprise Mainstream 3 yr Warranty SSD	730051-B21
HP 1.2TB 6G SAS 10K rpm SFF (2.5-in) SC Dual Port Enterprise 3 yr Warranty Hard Drive	718162-B21
6G SATA VE Hot Plug SFF (2.5-in) Enterprise Value SSD	
HP 800GB 6G SATA VE SFF 2.5-in SC Enterprise Value 3 yr Wty SSD	717973-B21
HP 600GB 6G SATA VE SFF 2.5-in SC Enterprise Value 3 yr Wty SSD	739898-B21
HP 300GB 6G SATA VE SFF 2.5-in SC Enterprise Value 3 yr Wty SSD	739888-B21
HP 480GB 6G SATA VE SFF 2.5-in SC Enterprise Value 3 yr Wty SSD	717971-B21
HP 240GB 6G SATA VE SFF 2.5-in SC Enterprise Value 3 yr Wty SSD	717969-B21
6G SATA Read Intensive. (RI)-2 SFF SC SSD	
HP 1.6TB 6G SATA RI-2 SFF SC SSD	804605-B21
HP 800GB 6G SATA RI-2 SFF SC SSD	804599-B21
HP 480GB 6G SATA RI-2 SFF SC SSD	804593-B21
HP 240GB 6G SATA RI-2 SFF SC SSD	804587-B21
HP 120GB 6G SATA RI-2 SFF SC SSD	804581-B21
HP 80GB 6G SATA RI-2 SFF SC SSD	804575-B21
6G SATA Mixed Use (MU)-2 SFF SC SSD	
HP 1.6TB 6G SATA MU-2 SFF SC SSD	804631-B21
HP 800GB 6G SATA MU-2 SFF SC SSD	804625-B21
HP 480GB 6G SATA MU-2 SFF SC SSD	832414-B21
HP 200GB 6G SATA MU-2 SFF SC SSD	804613-B21
6G SATA Write Intensive (WI)-2 SFF SC SSD	
HP 1.2TB 6G SATA WI-2 SFF SC SSD	804677-B21
HP 800GB 6G SATA WI-2 SFF SC SSD	804671-B21

Description	Option Part Number
HP 400GB 6G SATA WI-2 SFF SC SSD	804665-B21
HP 200GB 6G SATA WI-2 SFF SC SSD	804639-B21
12G SAS VE SSD	
HP 800GB 12G SAS VE SFF 2.5-in SC Enterprise Value 3 yr Wty SSD	762261-B21
HP 1.6TB 12G SAS VE SFF 2.5-in SC Enterprise Value 3 yr Wty SSD	762263-B21
HP 800GB 12G SAS VE LFF 3.5-in SC Enterprise Value 3 yr Wty SSD	762270-B21
HP 1.6TB 12G SAS VE LFF 3.5-in SC Enterprise Value 3 yr Wty SSD	762272-B21

High Performance Clusters

Description	Option Part Number
HP Insight Cluster Management Utility 1 yr 24x7 Flexible License	QL803B
HP Insight Cluster Management Utility 3 yr 24x7 Flexible License	BD476A
HP Insight Cluster Management Utility Media	BD477A

InfiniBand

Description	Option Part Number
HP InfiniBand Fourteen Data Rate/Ethernet (FDR/EN) 10/40Gb Dual Port 544Quad Small Form-factor Pluggable (QSFP) Adapter	649281-B21
HP InfiniBand FDR/EN 10/40Gb Dual Port 544FLR-QSFP Adapter	649282-B21
HP InfiniBand Quad Data Rate/Ethernet (QDR/EN) 10Gb Dual Port 544FLR-QSFP Adapter	649283-B21

Description	Option Part Number
QLogic InfiniBand 4X QDR PCI-E G2 Dual Port HCA	583211-B21
HP InfiniBand 4X QDR ConnectX-2 PCIe G2 Dual Port HCA	592520-B21
HP InfiniBand FDR 2-port 545FLR-QSFP Adapter	702212-B21

Insight software

Description	Option Part Number
HP Insight Control including 1 yr 24x7 Technical Support and Updates Single Server License	C6N27A
HP Insight Control including 1 yr 24x7 Technical Support and Updates Electronic License	C6N28ABE
HP Insight Control Server Provisioning Media Kit	BD883A
HP Insight Management Media Kit	C6N31A
HP Insight Control including 1 yr 24x7 Support ProLiant ML/DL/BL-bundle FIO Electronic License	C6N36ABE
HP Insight Control Server Deployment including 1 yr 24x7 Support Electronic License	T9082AAE
HP Insight Control Server Deployment including 1 yr 24x7 Support Single Server License	452151-B21

iLO

Description	Option Part Number
HP iLO Scale-Out including 3 yr 24x7 Tech Support and Updates Flex Qty E-LTU	BD776AAE
HP iLO Scale-Out 3 yr 24x7 Tech Support and Updates Flex Quantity License	BD776A
HP iLO Scale-Out including 3 yr 24x7 Tech Support and Updates Tracking License	BD777A

Description	Option Part Number
HP iLO Scale-Out including 1 yr 24x7 Tech Support and Updates Flex Qty E-LTU	BD778AAE
HP iLO Scale-Out 1 yr 24x7 Tech Support and Updates Flex Quantity License	BD778A
HP iLO Scale-Out including 1 yr 24x7 Tech Support and Updates Tracking License	BD779A
HP iLO Advanced including 1 yr 24x7 Technical Support and Updates Electronic License	E6U59ABE
HP iLO Advanced including 3 yr 24x7 Tech Support and Updates Electronic License	E6U64ABE
HP iLO Advanced license	
HP iLO Advanced including 1 yr 24x7 Technical Support and Updates Single Server License	512485-B21
HP iLO Advanced 1 Server License with 3 yr 24x7 Tech Support and Updates	BD505A

Memory

Description	Option Part Number
Registered DIMMs (RDIMMs)	
HP 4GB (1 x 4GB) Single Rank x4 PC3L-12800R (DDR3-1600) Registered CAS-11 Low Voltage Memory Kit	713981-B21
HP 4GB (1 x 4GB) Single Rank x4 PC3-14900R (DDR3-1866) Registered CAS-13 Memory Kit	708637-B21
HP 8GB (1 x 8GB) Dual Rank x4 PC3L-12800R (DDR3-1600) Registered CAS-11 Low Voltage Memory Kit	713983-B21
HP 8GB (1 x 8GB) Single Rank x4 PC3L-12800R (DDR3-1600) Registered CAS-11 Low Voltage Memory Kit	731765-B21
HP 8GB (1 x 8GB) Dual Rank x4 PC3-14900R (DDR3-1866) Registered CAS-13 Memory Kit	708639-B21
HP 8GB (1 x 8GB) Single Rank x4 PC3-14900R (DDR3-1866) Registered CAS-13 Memory Kit	731761-B21

Description	Option Part Number
HP 16GB (1 x 16GB) Dual Rank x4 PC3L-12800R (DDR3-1600) Registered CAS-11 Low Voltage Memory Kit	713985-B21
HP 16GB (1 x 16GB) Dual Rank x4 PC3-14900R (DDR3-1866) Registered CAS-13 Memory Kit	708641-B21
HP 8GB (1 x 8GB) Dual Rank x4 PC3-12800R (DDR3-1600) Registered CAS-11 Memory Kit	690802-B21
HP 16GB (1 x 16GB) Dual Rank x4 PC3-12800R (DDR3-1600) Registered CAS-11 Memory Kit	672631-B21
HP 4GB (1 x 4GB) Single Rank x4 PC3L-10600R (DDR3-1333) Registered CAS-9 Low Voltage Memory Kit	647893-B21
HP 8GB (1 x 8GB) Dual Rank x4 PC3L-10600R (DDR3-1333) Registered CAS-9 Low Voltage Memory Kit	647897-B21
HP 16GB (1 x 16GB) Dual Rank x4 PC3L-10600R (DDR3-1333) Registered CAS-9 Low Voltage Memory Kit	647901-B21
HP 4GB (1 x 4GB) Single Rank x4 PC3-12800R (DDR3-1600) Registered CAS-11 Memory Kit	647895-B21
HP 8GB (1 x 8GB) Single Rank x4 PC3-12800R (DDR3-1600) Registered CAS-11 Memory Kit	647899-B21
Unbuffered with ECC DIMMs (UDIMMs)	
HP 2GB (1 x 2GB) Single Rank x8 PC3L-12800E (DDR3-1600) Unbuffered CAS-11 Low Voltage Memory Kit	713975-B21
HP 2GB (1 x 2GB) Single Rank x8 PC3-14900E (DDR3-1866) Unbuffered CAS-13 Memory Kit	708631-B21
HP 4GB (1 x 4GB) Dual Rank x8 PC3L-12800E (DDR3-1600) Unbuffered CAS-11 Low Voltage Memory Kit	713977-B21
HP 4GB (1 x 4GB) Dual Rank x8 PC3-14900E (DDR3-1866) Unbuffered CAS-13 Memory Kit	708633-B21
HP 8GB (1 x 8GB) Dual Rank x8 PC3L-12800E (DDR3-1600) Unbuffered CAS-11 Low Voltage Memory Kit	713979-B21
HP 8GB (1 x 8GB) Dual Rank x8 PC3-14900E (DDR3-1866) Unbuffered CAS-13 Memory Kit	708635-B21
Unbuffered with ECC DIMMs (UDIMMs)	

Description	Option Part Number
HP 2GB (1 x 2GB) Single Rank x8 PC3-12800E (DDR3-1600) Unbuffered CAS-11 Memory Kit	669320-B21
HP 2GB (1 x 2GB) Single Rank x8 PC3L-10600E (DDR3-1333) Unbuffered CAS-9 Low Voltage Memory Kit	647905-B21
HP 4GB (1 x 4GB) Dual Rank x8 PC3-12800E (DDR3-1600) Unbuffered CAS-11 Memory Kit	669322-B21
HP 8GB (1 x 8GB) Dual Rank x8 PC3-12800E (DDR3-1600) Unbuffered CAS-11 Memory Kit	669324-B21
HP 4GB (1 x 4GB) Dual Rank x8 PC3L-10600E (DDR3-1333) Unbuffered CAS-9 Low Voltage Memory Kit	647907-B21
HP 8GB (1 x 8GB) Dual Rank x8 PC3L-10600E (DDR3-1333) Unbuffered CAS-9 Low Voltage Memory Kit	647909-B21
Load Reduced DIMMs (LRDIMMs)	
HP 32GB (1 x 32GB) Quad Rank x4 PC3-14900L (DDR3-1866) Load Reduced CAS-13 Memory Kit	708643-B21
HP 32GB (1 x 32GB) Quad Rank x4 PC3L-10600L (DDR3-1333) Load Reduced CAS-9 Low Voltage Memory Kit	647903-B21

Networking

Description	Option Part Number
Gigabit Ethernet Adapters	
HP Ethernet 1Gb 4-port 366FLR FIO Adapter	684217-B21
HP FlexFabric 10Gb 2-port 526FLR-SFP+ FIO Adapter	684219-B21
HP Ethernet 10Gb 2-port 560FLR-SFP+ FIO Adapter	684218-B21
HP FlexFabric 10Gb 2-port 534FLR-SFP+ FIO Adapter	700752-B21
HP FlexFabric 10Gb 2-port 533FLR-T FIO Adapter	700760-B21
HP NC112T PCIe Gigabit Server Adapter	503746-B21

Description	Option Part Number
HP NC365T 4-port Ethernet Server Adapter	593722-B21
HP Ethernet 1Gb 4-port 331T Adapter	647594-B21
HP Ethernet 1Gb 2-port 361T Adapter	652497-B21
HP Ethernet 1Gb 2-port 332T Adapter	615732-B21
10 Gigabit Ethernet adapters	
HP NC523Small Form-factor Pluggable (SFP) 10Gb 2-port Server Adapter	593717-B21
HP Ethernet 10Gb 2-port 530T Adapter	656596-B21
HP NC552SFP 10Gb 2-port Ethernet Server Adapte r	614203-B21
HP Ethernet 10Gb 2-port 530SFP Adapter	652503-B21
HP Ethernet 10Gb 2-port 560SFP+ Adapter	665249-B21
HP Ethernet 10Gb 2-port 561T Adapter	716591-B21

Processors

Description	Option Part Number
HP SL250s Gen8 Intel Xeon E5-2609 (2.40 GHz/4 -core/10MB/80 W) Processor Kit	662326-B21
HP SL250s Gen8 Intel Xeon E5-2603 (1.80 GHz/4 -core/10MB/80 W) Processor Kit	662327-B21
HP SL250s Gen8 Intel Xeon E5-2640 (2.50 GHz/6 -core/15MB/95 W) Processor Kit	662323-B21
HP SL250s Gen8 Intel Xeon E5-2630 (2.30 GHz/6 -core/15MB/95 W) Processor Kit	662324-B21
HP SL250s Gen8 Intel Xeon E5-2620 (2.0 GHz/6-co re/15MB/95 W) Processor Kit	662325-B21
HP SL250s Gen8 Intel Xeon E5-2630L (2.0 GHz/6-c ore/15MB/60 W) Processor Kit	662332-B21
HP SL250s Gen8 Intel Xeon E5-2670 (2.60 GHz/8 -core/20MB/115 W) Processor Kit	662319-B21

Description	Option Part Number
HP SL250s Gen8 Intel Xeon E5-2665 (2.40 GHz/8-core/20MB/115 W) Processor Kit	662320-B21
HP SL250s Gen8 Intel Xeon E5-2660 (2.20 GHz/8-core/20MB/95 W) Processor Kit	662321-B21
HP SL250s Gen8 Intel Xeon E5-2650 (2.0 GHz/8-core/20MB/95 W) Processor Kit	662322-B21
HP SL250s Gen8 Intel Xeon E5-2650L (1.80 GHz/8-core/20MB/70 W) Processor Kit	662331-B21
HP SL250s Gen8 Intel Xeon E5-2637 (3.0 GHz/2-core/5MB/80 W) Processor Kit	662330-B21
HP SL2x0s Gen8 Intel Xeon E5-2695v2 (2.4 GHz/12-core/30MB/115 W) FIO Processor Kit	725944-B21
HP SL2x0s Gen8 Intel Xeon E5-2680v2 (2.8 GHz/10-core/25MB/115 W) FIO Processor Kit	725937-B21
HP SL2x0s Gen8 Intel Xeon E5-2670v2 (2.5 GHz/10-core/25MB/115 W) FIO Processor Kit	725938-B21
HP SL2x0s Gen8 Intel Xeon E5-2660v2 (2.2 GHz/10-core/25MB/95 W) FIO Processor Kit	725939-B21
HP SL2x0s Gen8 Intel Xeon E5-2650v2 (2.6 GHz/8-core/20MB/95 W) FIO Processor Kit	725940-B21
Base Processors	
HP SL2x0s Gen8 Intel Xeon E5-2630v2 (2.6 GHz/6-core/15MB/80 W) FIO Processor Kit	725941-L21
HP SL2x0s Gen8 Intel Xeon E5-2650Lv2 (1.7 GHz/10-core/25MB/70 W) FIO Processor Kit	725943-L21
Entry Processors	
HP SL2x0s Gen8 Intel Xeon E5-2609v2 (2.5 GHz/4-core/10MB/80 W) FIO Processor Kit	725942-L21
Performance Processors	
HP SL2x0s Gen8 Intel Xeon E5-2695v2 (2.4 GHz/12-core/30MB/115 W) FIO Processor Kit	725944-L21
HP SL2x0s Gen8 Intel Xeon E5-2680v2 (2.8 GHz/10-core/25MB/115 W) FIO Processor Kit	725937-L21

Description	Option Part Number
HP SL2x0s Gen8 Intel Xeon E5-2670v2 (2.5 GHz/10-core/25MB/115 W) FIO Processor Kit	725938-L21
HP SL2x0s Gen8 Intel Xeon E5-2660v2 (2.2 GHz/10-core/25MB/95 W) FIO Processor Kit	725939-L21
HP SL2x0s Gen8 Intel Xeon E5-2650v2 (2.6 GHz/8-core/20MB/95 W) FIO Processor Kit	725940-L21
E5-2600 Series Processors - Entry Processors	
HP SL250s Gen8 Intel Xeon E5-2609 (2.4 GHz/4-core/10MB/80 W) FIO Processor Kit	662326-L21
HP SL250s Gen8 Intel Xeon E5-2603 (1.8 GHz/4-core/10MB/80 W) FIO Processor Kit	662327-L21
Base Processors	
HP SL250s Gen8 Intel Xeon E5-2640 (2.5 GHz/6-core/15MB/95 W) FIO Processor Kit	662323-L21
HP SL250s Gen8 Intel Xeon E5-2630 (2.3 GHz/6-core/15MB/95 W) FIO Processor Kit	662324-L21
HP SL250s Gen8 Intel Xeon E5-2620 (2.0 GHz/6-core/15MB/95 W) FIO Processor Kit	662325-L21
HP SL250s Gen8 Intel Xeon E5-2630L (2.0 GHz/6-core/15MB/60 W) FIO Processor Kit	662332-L21
Performance Processors	
HP SL250s Gen8 Intel Xeon E5-2670 (2.6 GHz/8-core/20MB/115 W) FIO Processor Kit	662319-L21
HP SL250s Gen8 Intel Xeon E5-2665 (2.4 GHz/8-core/20MB/115 W) FIO Processor Kit	662320-L21
HP SL250s Gen8 Intel Xeon E5-2660 (2.2 GHz/8-core/20MB/95 W) FIO Processor Kit	662321-L21
HP SL250s Gen8 Intel Xeon E5-2650 (2.0 GHz/8-core/20MB/95 W) FIO Processor Kit	662322-L21
HP SL250s Gen8 Intel Xeon E5-2650L (1.8 GHz/8-core/20MB/70 W) FIO Processor Kit	662331-L21
HP SL250s Gen8 Intel Xeon E5-2637 (3.0 GHz/2-core/5MB/80 W) FIO Processor Kit	662330-L21
HP SL2x0s Gen8 Intel Xeon E5-2609v2 (2.5 GHz/4-core/10MB/80 W) Processor Kit	725942-B21
HP SL2x0s Gen8 Intel Xeon E5-2630v2 (2.6 GHz/6-core/15MB/80 W) Processor Kit	725941-B21
HP SL2x0s Gen8 Intel Xeon E5-2650Lv2 (1.7 GHz/10-core/25MB/70 W) Processor Kit	725943-B21

Power Distribution Unit (PDU)

Description	Option Part Number
HP 8.6kVA 24A Single Input Three Phase NA/JP Monitored PDU	AF504A
HP 8.3kVA 40A Single Input Single Phase NA/JP Monitored PDU	AF506A
HP 11kVA 16A Single Input Three Phase INTL Monitored PDU	AF508A
HP 7.3kVA 32A Single Input Single Phase INTL Monitored PDU	AF510A
HP 4.9kVA 24A Single Input Single Phase NA/JP Monitored PDU	AF914A
HP 7.3kVA 32A Single Input Single Phase INTL Monitored PDU	AF915A
HP Intelligent Power Distribution Unit (iPDU)	
HP 4.9kVA 24A Single Phase NA/JP Core Intelligent Modular PDU	AF520A
HP 8.3kVA 40A Single Phase NA/JP Core Intelligent Modular PDU	AF521A
HP 8.6kVA 24A Three Phase NA/JP Core Intelligent Modular PDU	AF522A
HP 14.4kVA 40A Three Phase NA/JP Intelligent Modular PDU	AF533A
HP 17.3kVA 48A Three Phase NA/JP Core Intelligent Modular PDU	AF523A
HP 17.3kVA 24A 415 V Three Phase L22-30 NA Core iPDU	AF902A
HP 7.3kVA 32A Single Phase INTL Core Intelligent Modular PDU	AF525A
HP 11kVA 16A Three Phase INTL Core Intelligent Modular PDU	AF526A
HP 5xC13 iPDU Extension Bar G2 Kit	AF547A
HP 17.3kVA 48A 208 V Three Phase 12 Outlet Core NA/JP iPDU	AF535A
HP 17.3kVA 24A 415 V Three Phase 12 Outlet Core NA/JP iPDU	AF537A

Description	Option Part Number
HP 22kVA 32A 400 V Three Phase 12 Outlet Core I NTL iPDU	AF538A
HP 5xC13 Outlets Power and UID LEDs Pair Standa rd Extension Bar	AF528A
HP Basic PDU	
HP 1.9kVA 120 V 12 Outlet NA/JP Basic PDU	H5M54A
HP 2.8kVA 120 V 18 Outlet NA/JP Basic PDU	H5M55A
HP 3.6kVA 200-240 V12 Outlet WW Basic PDU	H5M56A
HP 3.6kVA 200-240 V 20 Outlet WW Basic PDU	H5M57A
HP 4.9kVA 208 V 20 Outlet NA/JP Basic PDU	H5M58A
HP 4.9kVA 208 V 30 Outlet NA/JP Basic PDU	H5M59A
HP 8.3kVA 208 V 36 Outlet NA/JP Basic PDU	H5M60A
HP 8.6kVA 208 V Three Phase 18 Outlet NA/JP Basi c PDU	H5M61A
HP 8.6kVA 208 V Three Phase 30 Outlet NA/JP Basi c PDU	H5M62A
HP 5.7kVA 208 V Three Phase 27 Outlet NA/JP Dua l Voltage Basic PDU	H5M63A
HP 8.6kVA 208 V Three Phase 30 Outlet NA/JP Dua l Voltage Basic PDU	H5M64A
HP 11kVA 400 V Three Phase 42 Outlet NA Basic P DU	H5M67A
HP 7.3kVA 230 V 20 Outlet INTL Basic PDU	H5M68A
HP 7.3kVA 230 V 30 Outlet INTL Basic PDU	H5M70A
HP 11kVA 230 V 36 Outlet INTL Basic PDU	H5M71A
HP 11kVA 400 V Three Phase 30 Outlet INTL Basic PDU	H5M72A
HP 11kVA 400 V Three Phase 42 Outlet INTL Basic PDU	H5M73A
HP Hardwired 200-240 V 36 Outlet WW Basic PDU	H5M75A
HP 13.2kVA 480 V Three Phase 15 Outlet NA Basic PDU	H3X07A
HP 19.9kVA 480 V Three Phase 30 Outlet NA Basic PDU	H3X08A
HP 800 VA - 277 V Input/230 V Output NA Rack Mo unt Transformer	H3X09A
HP Remote Monitoring PDU	

Description	Option Part Number
HP 2.8kVA 120 V L5-30 Input (12xNEMA 5-20R)NA/JP Monitored PDU	D9N43A
HP 4.9kVA 208 V L6-30 Input (12xC13) NA/JP Monitored PDU	D9N44A
HP 3.6kVA 200-240 V Detachable C20 Input (16xC13) WW Monitored PDU	D9N45A
HP 3.6kVA 200-240 V Detachable C20 Input (12xC13) WW Monitored PDU	D9N46A
HP 4.9kVA 208 V L6-30 Input (20xC13/4xC19) NA/JP Monitored PDU	D9N47A
HP 7.3kVA 230 V IEC309 32A Input (20xC13/4xC19) INTL Monitored PDU	D9N48A
HP 8.3kVA 208 V CS8265C Input (30xC13/3xC19) NA Monitored PDU	D9N49A
HP 7.3kVA 230 V IEC309 32A Input (32xC13/4xC19) INTL Monitored PDU	D9N50A
HP 8.6kVA 208 V L15-30 3-Phase Input (18xC13/3xC19) NA/JP Monitored PDU	D9N51A
HP 5.7kVA 208 V L21-20 3-Phase Input (18xC13/3xNEMA 5-20R) NA/JP Monitored PDU	D9N52A
HP 8.6kVA 208 V L21-30 3-Phase Input (20xC13/3xC19/3xNEMA 5-20R) NA/JP Monitored PDU	D9N53A
HP 17.3kVA 208 V IEC309 60A 3-Phase Input (24xC13/3xC19) NA/JP Monitored PDU	D9N54A
HP 11kVA 400 V IEC309 16A 3-Phase Input (18xC13/3xC19) INTL Monitored PDU	D9N55A
HP 22kVA 400 V IEC309 32A 3-Phase Input (30xC13/3xC19) INTL Monitored PDU	D9N56A
HP 11kVA 400 V IEC309 16A 3-Phase Input (30xC13/3xC19) INTL Monitored PDU	D9N57A
HP 14.4kVA 208 V CS8365C 3-Phase Input (12xC13/12xC19)NA Monitored PDU	D9N58A
HP 17.3kVA 208 V IEC309 60A 3-Phase Input (12xC13/12xC19) NA/JP Monitored PDU	D9N59A
HP 22kVA 400 V IEC309 32A 3-Phase Input (12xC13/12xC19) INTL Monitored PDU	D9N60A
HP 16.6kVA 400 V IEC309 30A 3-Phase Input (30xC13/3xC19) NA Monitored PDU	D9N61A

Description	Option Part Number
HP 16.6kVA 400 V IEC309 30A 3-Phase Input (12x C13/12xC19) NA Monitored PDU	D9N62A
HP 19.9kVA 480 V 3-Phase (30 Outlet) NA Monito red PDU	D9N63A
HP Environmental Sensor for Remote Monitored PDUs	
HP Environmental Sensor for Remote Monitored PD Us	E2D53A
iPDU Kits with Standard Extension Bars	
HP 4.9kVA 24A Single Phase NA/JP Intelligent Mod ular Power Distribution Kit	AF531A
HP 8.6kVA 24A Three Phase NA/JP Intelligent Modu lar Power Distribution Kit	AF532A
HP 7.3kVA 32A Single Phase INTL Intelligent Modul ar Power Distribution Kit	AF534A

Power Supply

Description	Option Part Number
HP 750-W CS Platinum Plus Hot Plug Power Supply Kit	656363-B21
HP 1200-W CS Platinum Plus Hot Plug Power Suppl y Kit	656364-B21
HP 750-W CS Gold Hot Plug Power Supply Kit	512327-B21
HP 1200-W CS Silver Hot Plug Power Supply Kit	500172-B21
HP 750-W CS Platinum Hot Plug Power Supply Kit	593831-B21
HP 1200-W CS Platinum Hot Plug Power Supply Kit	578322-B21
HP 1200-W CS -48 V dc Hot Plug Power Supply Kit	437573-B21

Racks

Description	Option Part Number
HP Rack series	
HP 636 1200-mm Pallet Intelligent Series Rack	BW899A
HP 636 1200-mm Shock Intelligent Series Rack	BW900A
HP 642 1200-mm Pallet Intelligent Series Rack	BW907A
HP 642 1200-mm Shock Intelligent Series Rack	BW908A
HP 647 1200-mm Pallet Intelligent Series Rack	BW913A
HP 647 1200-mm Shock Intelligent Series Rack	BW914A
HP Rack options	
HP TFT7600 G2 KVM Console Rackmount Keyboard US Monitor	AZ870A
HP TFT7600 G2 KVM Console Rackmount Keyboard UK Monitor	AZ871A
HP TFT7600 G2 KVM Console Rackmount Keyboard DE Monitor	AZ872A
HP TFT7600 G2 KVM Console Rackmount Keyboard FR Monitor	AZ873A
HP TFT7600 G2 KVM Console Rackmount Keyboard IT Monitor	AZ874A
HP TFT7600 G2 KVM Console Rackmount Keyboard ES Monitor	AZ875A
HP TFT7600 G2 KVM Console Rackmount Keyboard DK Monitor	AZ876A
HP TFT7600 G2 KVM Console Rackmount Keyboard NO Monitor	AZ877A
HP TFT7600 G2 KVM Console Rackmount Keyboard SE/FI Monitor	AZ878A
HP TFT7600 G2 KVM Console Rackmount Keyboard CH Monitor	AZ879A
HP TFT7600 G2 KVM Console Rackmount Keyboard PT Monitor	AZ880A
HP TFT7600 G2 KVM Console Rackmount Keyboard BE Monitor	AZ881A
HP TFT7600 G2 KVM Console Rackmount Keyboard JP Monitor	AZ882A

Description	Option Part Number
HP TFT7600 G2 KVM Console Rackmount Keyboard RU Monitor	AZ883A
HP TFT7600 G2 KVM Console Rackmount Keyboard Intl Monitor	AZ884A
HP TFT7600 G2 KVM Console Rackmount Keyboard US TAA Monitor	AZ885A
HP USB Keyboard and Mouse	
HP USB Brominated Flame Retardants (BFR) with Polyvinyl Chloride (PVC) Free US Keyboard/Mouse Kit	631341-B21
HP USB BFR with PVC Free UK Keyboard/Mouse Kit	631344-B21
HP USB BFR with PVC Free FR Keyboard/Mouse Kit	631346-B21
HP USB BFR with PVC Free ES Keyboard/Mouse Kit	631348-B21
HP USB BFR with PVC Free DE Keyboard/Mouse Kit	631358-B21
HP USB BFR with PVC Free JP Keyboard/Mouse Kit	631360-B21
HP USB BFR with PVC Free IT Keyboard/Mouse Kit	631362-B21
HP USB BFR with PVC Free CN Keyboard/Mouse Kit	631364-B21
HP USB BFR with PVC Free AE Keyboard/Mouse Kit	638212-B21
HP USB BFR with PVC Free RU Keyboard/Mouse Kit	638214-B21
HP USB BFR with PVC Free AP-Intl Keyboard/Mouse Kit	672097-373
HP USB BFR with PVC Free Intl Keyboard/Mouse Kit	672097-B33
HP USB BFR with PVC Free PT Keyboard/Mouse Kit	672097-133
HP USB BFR with PVC Free TR Keyboard/Mouse Kit	672097-143
HP USB BFR with PVC Free CZ Keyboard/Mouse Kit	672097-223
HP USB BFR with PVC Free FI Keyboard/Mouse Kit	672097-353
HP USB BFR with PVC Free SE Keyboard/Mouse Kit	672097-103
HP USB BFR with PVC Free CH Keyboard/Mouse Kit	672097-113
HP USB BFR with PVC Free KR Keyboard/Mouse Kit	672097-KD3
HP USB BFR with PVC Free IN Keyboard/Mouse Kit	672097-D63
HP Server Console Switches	
HP Server Console 0x2x8 Port Analog Switch	AF616A
HP Server Console 0x2x16 Port Analog Switch	AF617A
HP TAA 0x2x16xKVM Server Console G2 Switch	AF626A
HP Server Console Switch G2 with Virtual Media & Common Access Card (CAC)	

Description	Option Part Number
HP 0x2x16 KVM Server Console Switch G2 with Virtual Media CAC Software	AF618A
HP 0x2x32 KVM Server Console Switch G2 with Virtual Media CAC Software	AF619A
HP KVM CAT5 1-pack USB Interface Adapter	336047-B21
HP IP Console Switch G2 with Virtual Media and CAC	
HP 1x4 USB/PS2 KVM Console Switch	AF611A
HP 1x1Ex8 KVM IP Console Switch G2 with Virtual Media CAC Software	AF620A
HP 2x1Ex16 KVM IP Console Switch G2 with Virtual Media CAC Software	AF621A
HP 4x1Ex32 KVM IP Console Switch G2 with Virtual Media CAC Software	AF622A

Server Nodes

Description	Option Part Number
HP ProLiant SL250s Gen8 2U PCIe Gen3 Left Tray CTO Svr	698723-B21
HP ProLiant SL250s Gen8 2U PCIe Gen3 Right Tray CTO Svr	698724-B21
HP ProLiant SL250s Gen8 E5-v2 Left Tray CTO Server	750349-B21
HP ProLiant SL250s Gen8 E5-v2 Right Tray CTO Server	750350-B21

NOTE

- The following SKUs are compatible with E5-2600 series processors.
- The following SKUs are compatible with E5-2600v2 series processors.

Storage Controllers

Description	Option Part Number
HP Smart Array P222/512 FBWC 6Gb 1-port Int/1 -port Ext SAS Controller	631667-B21
HP Smart Array P420/1GB FBWC 6Gb 2-ports Int SAS Controller	631670-B21
HP Smart Array P420/2GB FBWC 6Gb 2-ports Int SAS Controller	631671-B21
HP Smart Array P421/1GB FBWC 6Gb 2-ports Ext SAS Controller	631673-B21
HP Smart Array P421/2GB FBWC 6Gb 2-ports Ext SAS Controller	631674-B21
HP Smart Array P430/2GB FBWC 6Gb 1-port Int SA S Controller	698529-B21
HP Smart Array P431/2GB FBWC 6Gb 2-ports Ext SAS Controller	698531-B21
HP 512MB B-series Dynamic Smart Array FBWC wit h 24-in Cable	676473-B21
HP 24-in Super Capacity Option for Smart Array	668944-B21
HP SL250s 4X SFF Smart Array Enablement Kit	670564-B21
HP SAS License Key No Media 1 Single Server Licen se for B320i	BC393A
HP SmartCache No Media 24x7 Technical Support 1 Svr License	D7S26A
HP SmartCache No Media 24x7 Technical Support Fl exible License	D7S27A
HP SmartCache No Media 24x7 Technical Support El ectronic License	D7S27AAE
HP H220 HBA	650933-B21
HP H222 HBA	650926-B21

Tape backup

Description	Option Part Number
HP StoreEver LTO-6 Ultrium 6250 Tape Drive in 1U Rack-mount Kit	C0L99A
HP StoreEver 1/8 G2 LTO-6 Ultrium 6250 FC Tape Autoloader	C0H19A
HP StoreEver LTO-6 Ultrium 6650 Internal Tape Dri ve	EH963A
HP StoreEver LTO-6 Ultrium 6650 External Tape Dri ve	EH964A
HP StoreEver LTO-6 Ultrium 6250 Internal Tape Dri ve	EH969A
HP StoreEver LTO-6 Ultrium 6250 External Tape Dri ve	EH970A
HP StoreEver MSL6480 Scalable Base Module	QU625A

Uninterruptible Power System (UPS)

Description	Option Part Number
HP R1500 G3 Uninterruptible Power Supply	
HP R1.5kVA G3 1U NA UPS	AF469A
HP R1.5kVA G3 1U JP/TW UPS	AF470A
HP R1.5kVA G3 1U INTL UPS	AF471A
HP R/T3000 G2 UPS	
HP R/T3000 G2 2U L530 Low Voltage NA/JP UPS	AF466A
HP R/T3000 G2 2U L620 High Voltage NA/JP UPS	AF467A
HP R/T3000 G2 2U Detachable Cord High Voltage I NTL UPS	AF468A
R5000 UPS	
HP R5KVA 3U IEC309-32A High Voltage INTL UPS	AF461A
HP R5KVA 3U L630 High Voltage NA/JP UPS	AF460A
R7000 UPS	

Description	Option Part Number
HP R7KVA 4U 50A High Voltage NA/JP UPS	AF462A
HP R7KVA 4U IEC-32A High Voltage INTL UPS	AF463A

Unique Options

Description	Option Part Number
SL250 SFF Internal Enablement Kit	679991-B21
HP SL250 NVIDIA GPU Enablement Kit	711947-B21
HP SL250 Coprocessor Enablement Kit	711949-B21

USB and SD options

Description	Option Part Number
HP 8GB USB Enterprise Mainstream Flash Media Drive Key Kit	737953-B21
HP 2GB USB Flash Media Drive Key Kit	608447-B21
HP 4GB Micro Secure Digital High Capacity (SDHC) Flash Media Kit	647444-B21
HP 8GB microSD Enterprise Mainstream Flash Media Kit	726116-B21
HP 32GB Micro SD Mainstream Flash Media Kit	700139-B21
HP 36-pin Serial/USB/Video Graphics Array (VGA) Dongle Cord Kit	676277-B21

Software Compatibility

Subtopics

OS Compatibility

Feature	Description
OS and virtualization software support for ProLiant servers1	• Microsoft Windows Server • Canonical Ubuntu • Red Hat Enterprise Linux (RHEL) • SUSE Linux Enterprise Server (SLES) • VMware • Citrix XenServer

NOTE: 1: For more information on HP's Certified and Supported ProLiant Servers for OS and Virtualization Software and latest listing of software drivers available for the server.

Useful Links

Description	Direct Links
Alerts	**Click here to view "Alerts, Security Bulletin, Advisory, Notice and other documents of HPE ProLiant SL250s Gen8 Server".**
Drivers and Softwares	**Click here to view "Drivers and Softwares, Firmware, Driver, BIOS, Application, Utility, OS, Software document of HPE ProLiant SL250s Gen8 Server".**
Knowledge Articles	**Click here to view "Knowledge Articles, Troubleshooting, FAQ, How To, Informational document of HPE ProLiant SL250s Gen8 Server".**

Description	Direct Links
Manuals	**Click here to view "Manuals, Guides, Release Notes, Troubleshooting articles and other related document of HPE ProLiant SL250s Gen8 Server".**
Videos	**Click here to access "Videos of Remove/Replace, Setup/Installation, Troubleshooting, Management/Operations of HPE ProLiant SL250s Gen8 Server ".**