HP ProLiant SL250s Gen8 Server User Guide

Abstract

This document provides detailed instructions to configure and use the HP ProLiant SL250s Gen8 Server.



Part Number: 666298-004a
January 2015
Edition: 5

© Copyright 2012, 2015 Hewlett-Packard Development Company, L.P.

The information contained herein is subject to change without notice. The only warranties for HP products and services are set forth in the express warranty statements accompanying such products and services. Nothing herein should be construed as constituting an additional warranty. HP shall not be liable for technical or editorial errors or omissions contained herein.

Confidential computer software. Valid license from HP required for possession, use or copying. Consistent with FAR 12.211 and 12.212, Commercial Computer Software, Computer Software Documentation, and Technical Data for Commercial Items are licensed to the U.S. Government under vendor's standard commercial license.

Linux® is the registered trademark of Linus Torvalds in the U.S. and other countries.

Microsoft® and Windows® are trademarks of the Microsoft group of companies.

microSD is a trademark or a registered trademark of SD-3C in the United States, other countries or both.

Red Hat® is a registered trademark of Red Hat, Inc. in the United States and other countries.

VMware® is a registered trademark of trademark of VMware, Inc. in the United States and/or other jurisdictions.

Contents

Component identification 7
Front panel components 7
Front panel LEDs and buttons 8
Rear panel components 9
Rear panel LEDs and buttons 10
System board components 10
DIMM slot locations 11
System maintenance switch 12
NMI functionality 13
Drive numbering 13
Hot-plug drive LED definitions 14
Operations 16
Power down the server 16
Remove the server from the chassis 16
Remove the front GPU cage 17
Install the front GPU cage 17
Remove the interposer board 18
Install the interposer board 19
Remove the front GPU bracket 19
Install the front GPU bracket 20
Remove the processor air baffle 21
Install the processor air baffle 21
Removing the SFF hot-plug drive cage 22
Installing the SFF hot-plug drive cage 23
Remove the PCI riser cage 23
Install the PCI riser cage 24
Remove the FlexibleLOM riser cage 25
Install the FlexibleLOM riser cage 25
Setup 27
Optional installation services 27
Optimum environment 27
Space and airflow requirements 27
Temperature requirements 28
Power requirements 29
Electrical grounding requirements 29
Rack warnings 29
Contents of the server shipping carton 30
Installing the chassis 30
Installing options 30
Installing the components 31
Installing the server into the chassis 31
Powering up the chassis 32
Configuring the chassis 32
Powering on and selecting boot options 32
Installing the system software 34

Registering the server ... 34
Hardware options installation ... 35
Introduction ... 35
Processor option ... 35
Memory options ... 39
HP SmartMemory ... 40
Memory subsystem architecture ... 40
Single-, dual-, and quad-rank DIMMs ... 40
DIMM identification ... 41
Memory protection modes ... 41
General DIMM slot population guidelines ... 43
Installing a DIMM ... 44
Drive guidelines ... 45
Installing a hot-plug drive ... 46
Installing SFF quick-release drive cages ... 46
Installing a quick-release drive ... 51
Controller options ... 52
Installing the FBWC module and capacitor pack ... 53
Smart Array enablement Mini-SAS cable option ... 56
Expansion board options ... 58
Installing an expansion board ... 58
GPU installation ... 60
Large BAR setting for GPU installation ... 60
GPU population rules ... 61
Installing GPU brackets ... 61
Connecting the SUV cable ... 69
Redundant hot-plug power supply option ... 69
HP Trusted Platform Module option ... 71
Installing the Trusted Platform Module board ... 72
Retaining the recovery key/password ... 74
Enabling the Trusted Platform Module ... 74
Cabling ... 75
Cabling overview ... 75
Power cabling ... 75
System board power cabling ... 75
SFF hot-plug drive cage ... 76
Front quick-release cage ... 76
Rear quick-release drive cage ... 77
Front GPU ... 78
Rear GPU ... 79
Mini-SAS cabling ... 80
SFF hot-plug drive cage ... 80
Front quick-release drive cage ... 80
Rear quick-release drive cage ... 81
FBWC capacitor pack cabling ... 82
Software and configuration utilities ... 84
Server mode ... 84
Product QuickSpecs ... 84
HP iLO ... 84
Active Health System ... 85
Integrated Management Log ... 86

HP Insight Remote Support software ... 86
Scripting Toolkit for Windows and Linux ... 87
Intelligent Provisioning ... 87
HP Insight Diagnostics ... 88
Erase Utility ... 88
HP Service Pack for ProLiant ... 89
HP Smart Update Manager ... 89
HP ROM-Based Setup Utility ... 89
Using RBSU ... 90
Auto-configuration process ... 90
Boot options ... 91
Configuring AMP modes ... 91
Re-entering the server serial number and product ID ... 91
Utilities and features ... 92
Array Configuration Utility ... 92
HP Smart Storage Administrator ... 93
Option ROM Configuration for Arrays ... 93
ROMPaq utility ... 93
Automatic Server Recovery ... 94
USB support ... 94
Redundant ROM support ... 94
Keeping the system current ... 95
Access to HP Support Materials ... 95
Drivers ... 95
Software and firmware ... 95
Version control ... 95
HP operating systems and virtualization software support for ProLiant servers ... 96
HP Technology Service Portfolio ... 96
Change control and proactive notification ... 96

Troubleshooting ... 98
Troubleshooting resources ... 98
System battery ... 98

Regulatory information ... 100
Safety and regulatory compliance ... 100
Belarus Kazakhstan Russia marking ... 100
Turkey RoHS material content declaration ... 101
Ukraine RoHS material content declaration ... 101
Warranty information ... 101

Electrostatic discharge ... 102
Preventing electrostatic discharge ... 102
Grounding methods to prevent electrostatic discharge ... 102

Specifications ... 103
Environmental specifications ... 103
Server specifications ... 103
Hot-plug power supply calculations ... 103

Support and other resources ... 104
Before you contact HP ... 104
HP contact information ... 104
Customer Self Repair ... 104

Acronyms and abbreviations 112
Documentation feedback 116
Index 117

Component identification

Front panel components

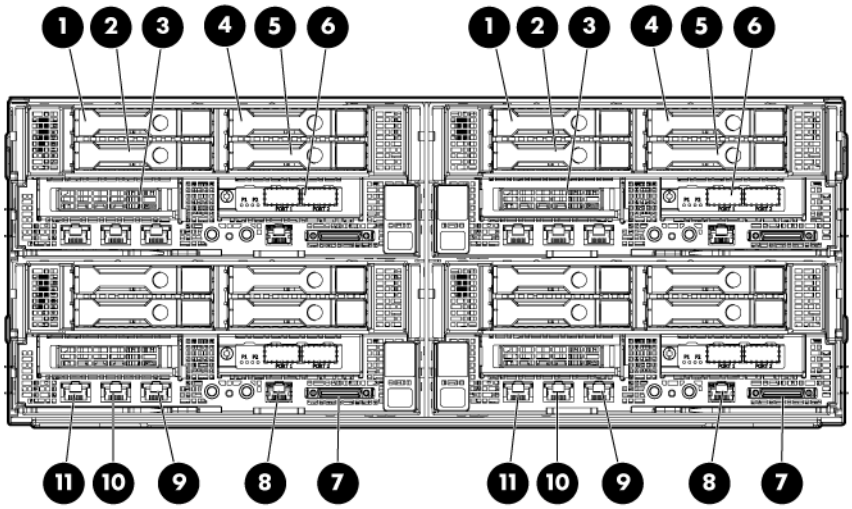

Item	Description
1	Hot-plug drive, Box 1 drive 1
2	Hot-plug drive, Box 1 drive 2
3	Option bay 1, PCI riser
4	Hot-plug drive, Box 1 drive 3
5	Hot-plug drive, Box 1 drive 4
6	Option bay 1, FlexibleLOM riser
7	SUV connector
8	Serial connector
9	NIC 1 connector
10	NIC 2 connector
11	iLO 4 connector

Front panel LEDs and buttons

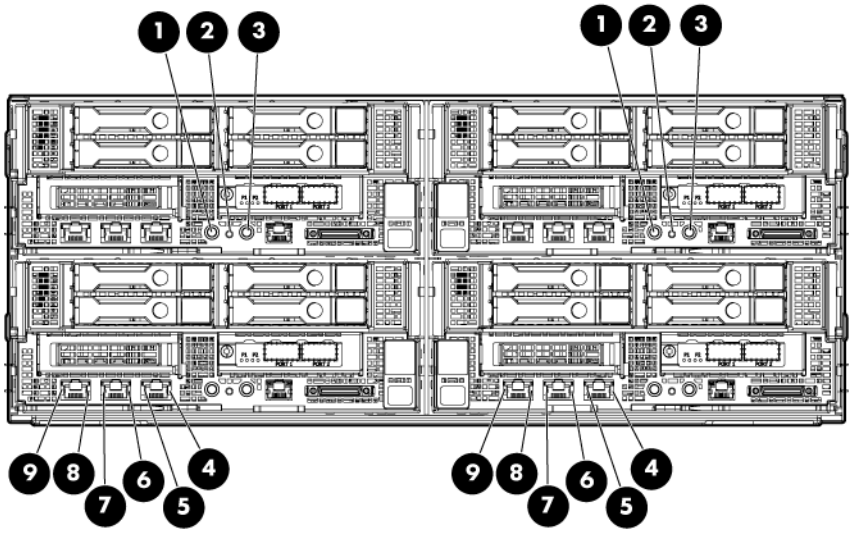

Item	Description	Status
1	Power On/Standby button and system power LED	Solid green = System on Flashing green (1 Hz/cycle per sec) = Performing power on sequence Solid amber = System in standby Off = No power present*
2	Health LED	Solid green = Normal Flashing amber = System degraded Flashing red (1 Hz/cycle per sec) = System critical Fast-flashing red (4 Hz/cycles per sec) = Power fault**
3	UID button/LED	Solid blue = Activated Flashing blue (1 Hz/cycle per sec) = Remote management or firmware upgrade in progress Off = Deactivated
4	NIC 1/iLO 4 speed LED	Green = LAN connection using a GbE link Amber = LAN connection using a 10 Mbps/100 Mbps link Off = No link exists
5	NIC 1/iLO 4 status LED	Solid green = Link to network Flashing green (1 Hz/cycle per sec) = Network active Off = No network activity
6	NIC 2 speed LED	Green = LAN connection using a GbE link Amber = LAN connection using a 10 Mbps/100 Mbps link Off = No link exists
7	NIC 2 status LED	Solid green = Link to network Flashing green (1 Hz/cycle per sec) = Network active Off = No network activity
8	iLO 4 status LED	Solid green = Link to network Flashing green (1 Hz/cycle per sec) = Network active Off = No network activity
9	iLO 4 speed LED	Green = LAN connection using a GbE link Amber = LAN connection using a 10 Mbps/100 Mbps link Off = No link exists

* Facility power is not present, power cord is not attached, no power supplies are installed, power supply failure has occurred, or the power button cable is disconnected.
** To identify components in a degraded or critical state, see the iLO/BIOS logs and the server troubleshooting guide.

Rear panel components

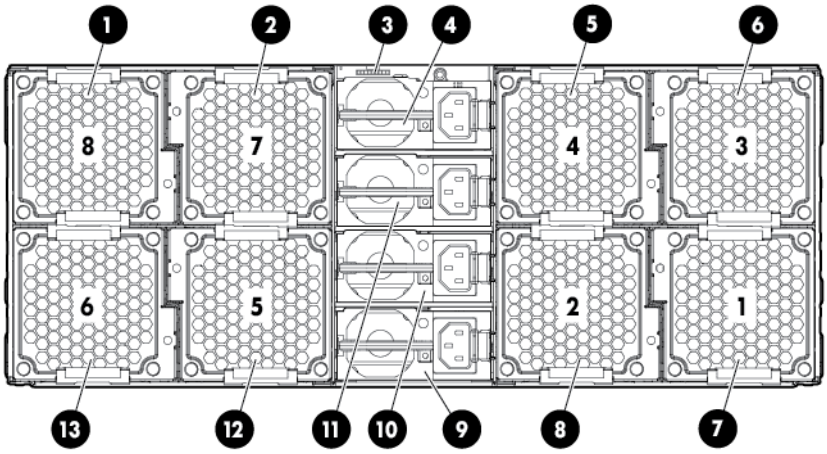

Item	Description
1	Fan 8
2	Fan 7
3	HP APM interface
4	Power supply 4
5	Fan 4
6	Fan 3
7	Fan 1
8	Fan 2
9	Power supply 1
10	Power supply 2
11	Power supply 3
12	Fan 5
13	Fan 6

Rear panel LEDs and buttons

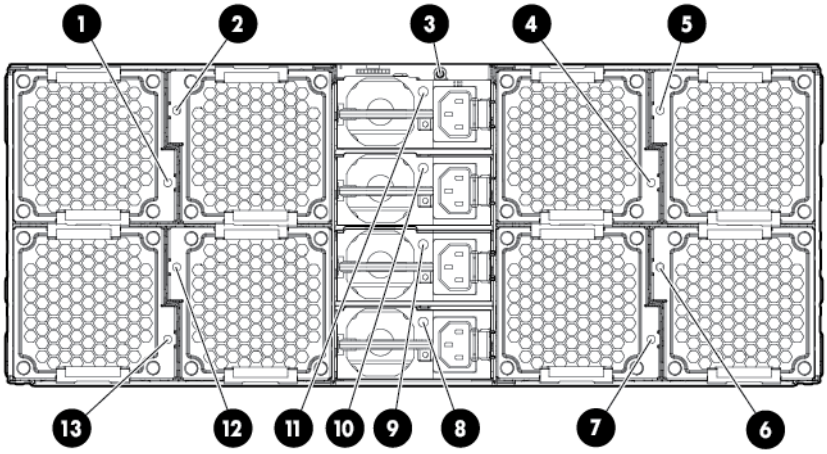

Item	Description	Status
1-2, 4-7, 12-13	System fan LEDs	Off = Normal Amber = Fan has failed
3	UID button/LED	Solid blue = Activated Flashing blue (1 Hz/cycle per sec) = Remote management or firmware upgrade in progress Off = Deactivated
8-11	Power supply LEDs	Solid green = Normal Off = One or more of the following conditions exists: • Power is unavailable • Power supply failed • Power supply is in standby mode • Power supply error

System board components

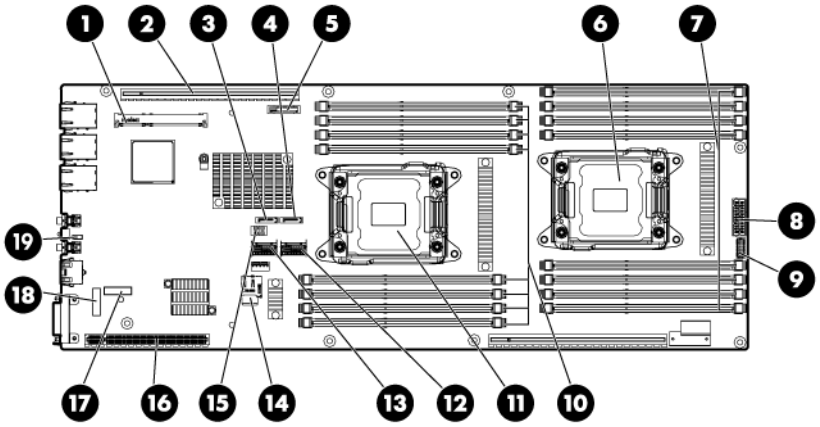

Item	Description
1	Cache module connector
2	PCIe x24 riser connector
3	SATA connector 2
4	SATA connector 1
5	System battery
6	Processor socket 2
7	Processor 2 DIMM slots
8	12-pin system board power connector
9	24-pin RPS connector
10	Processor 1 DIMM slots
11	Processor socket 1
12	Mini-SAS connector 2i
13	Mini-SAS connector 1i
14	microSD card slot
15	Hot-plug drive backplane sideband connector
16	FlexibleLOM x16 riser connector
17	System maintenance switch
18	TPM connector
19	NMI header

NOTE: This server supports PCIe Gen3 in the front LP PCIe slot and FlexibleLOM slot.

DIMM slot locations

DIMM slots are numbered sequentially (1 through 8) for each processor. The supported AMP modes use the alpha assignments for population order, and the slot numbers designate the DIMM slot ID for spare replacement.

The arrow points to the front of the server.

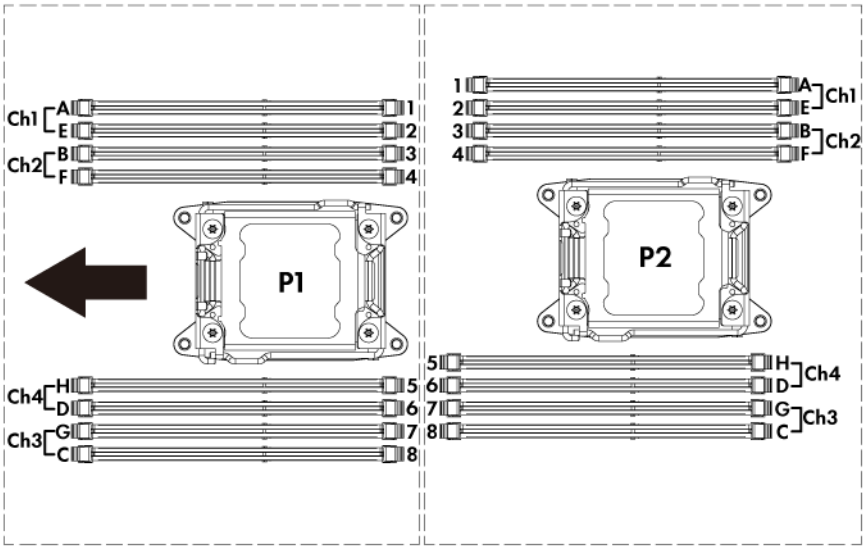

System maintenance switch

Position	Default	Function
S1	Off	Off = iLO 4 security is enabled. On = iLO 4 security is disabled.
S2	Off	Off = System configuration can be changed. On = System configuration is locked.
S3	Off	Reserved
S4	Off	Reserved
S5	Off	Off = Power-on password is enabled. On = Power-on password is disabled.
S6	Off	Off = No function On = ROM reads system configuration as invalid.
S7	—	Reserved
S8	—	Reserved
S9	—	Off = PCIe 64-bit BAR function (large BAR) is disabled. On = PCIe 64-bit BAR function (large BAR) is enabled.
S10	—	Reserved
S11	—	Reserved
S12	—	Reserved

To access the redundant ROM, set S1, S5, and S6 to on.

When the system maintenance switch position 6 is set to the On position, the system is prepared to erase all system configuration settings from both CMOS and NVRAM.

CAUTION: Clearing CMOS and/or NVRAM deletes configuration information. Be sure to properly configure the server or data loss could occur.

NMI functionality

An NMI crash dump creates a crash dump log before resetting a system which is not responding.

Crash dump log analysis is an essential part of diagnosing reliability problems, such as failures of operating systems, device drivers, and applications. Many crashes freeze a system, and the only available action for administrators is to restart the system. Resetting the system erases any information which could support problem analysis, but the NMI feature preserves that information by performing a memory dump before a system reset.

To force the system to invoke the NMI handler and generate a crash dump log, do one of the following:

- Use the iLO Virtual NMI feature.
- Short the NMI header ("System board components" on page 10).

For more information, see the HP website (http://www.hp.com/support/NMI).

Drive numbering

- Front hot-plug drive bay numbers (box 1)

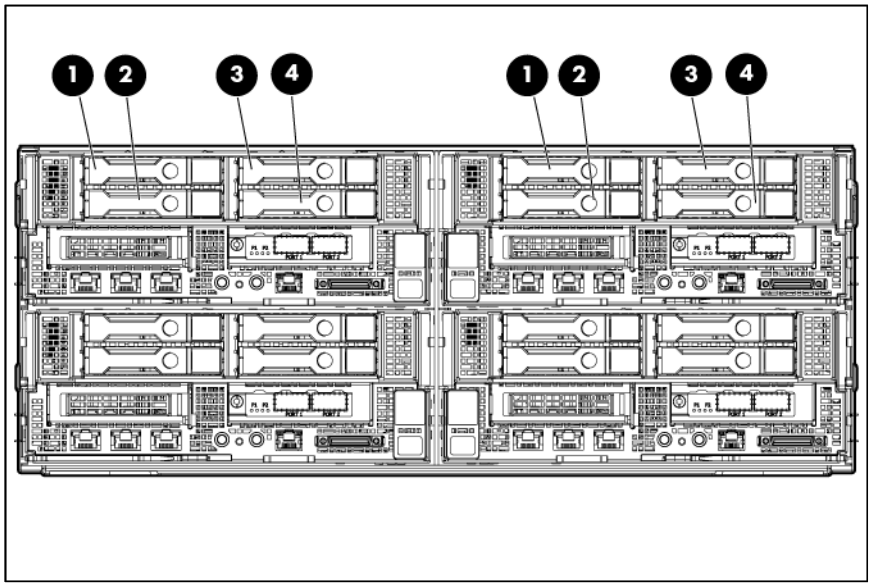

- Rear SFF drive bay numbers (box 0)

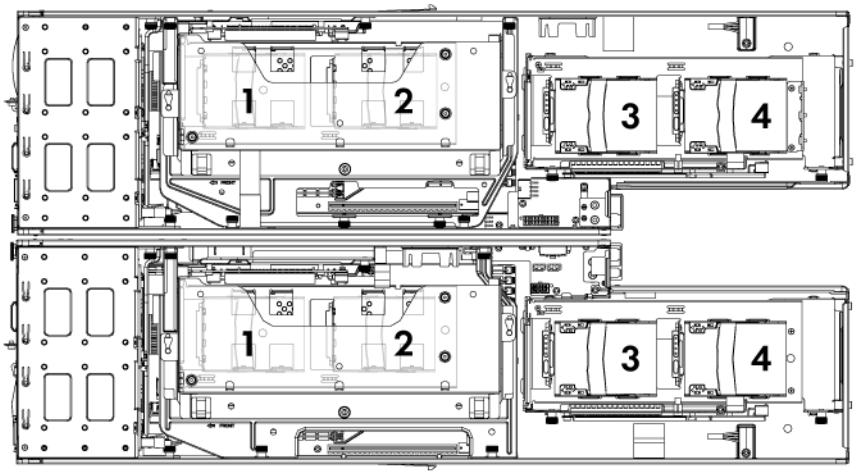

Hot-plug drive LED definitions

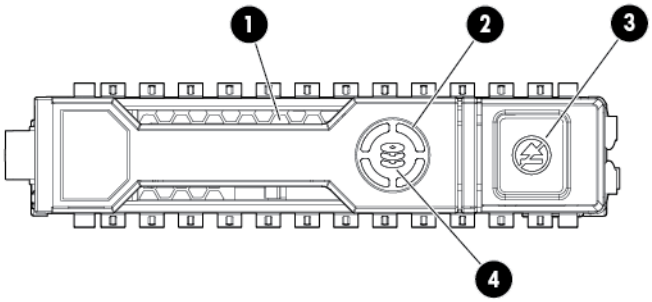

Item	LED	Status	Definition
1	Locate	Solid blue	The drive is being identified by a host application.
		Flashing blue	The drive carrier firmware is being updated or requires an update.
2	Activity ring	Rotating green	Drive activity
		Off	No drive activity
3	Do not remove	Solid white	Do not remove the drive. Removing the drive causes one or more of the logical drives to fail.
		Off	Removing the drive does not cause a logical drive to fail.
4	Drive status	Solid green	The drive is a member of one or more logical drives.
		Flashing green	The drive is rebuilding or performing a RAID migration, strip size migration, capacity expansion, or logical drive extension, or is erasing.
		Flashing amber/green	The drive is a member of one or more logical drives and predicts the drive will fail.
		Flashing amber	The drive is not configured and predicts the drive will fail.
		Solid amber	The drive has failed.

Item	LED	Status	Definition
		Off	The drive is not configured by a RAID controller.

Operations

Power down the server

Before powering down the server for any upgrade or maintenance procedures, perform a backup of critical server data and programs.

IMPORTANT: When the server is in standby mode, auxiliary power is still being provided to the system.

To power down the server, use one of the following methods:

- Press and release the Power On/Standby button.

  This method initiates a controlled shutdown of applications and the OS before the server enters standby mode.
- Press and hold the Power On/Standby button for more than 4 seconds to force the server to enter standby mode.

  This method forces the server to enter standby mode without properly exiting applications and the OS. If an application stops responding, you can use this method to force a shutdown.
- Use a virtual power button selection through iLO 4.

  This method initiates a controlled remote shutdown of applications and the OS before the server enters standby mode.

Before proceeding, verify the server is in standby mode by observing that the system power LED is amber.

Remove the server from the chassis

1. Power down the server (on page 16).
2. Disconnect all peripheral cables from the server.

   CAUTION: To avoid damage to the server, always support the bottom of the server when removing it from the chassis.
3. Remove the server from the chassis:
   a. Press the release button on the front of the server, and then extend the tray handle.
   b. Press the release button on the side of the server.

c. Use the tray handle to pull the server out of the chassis.

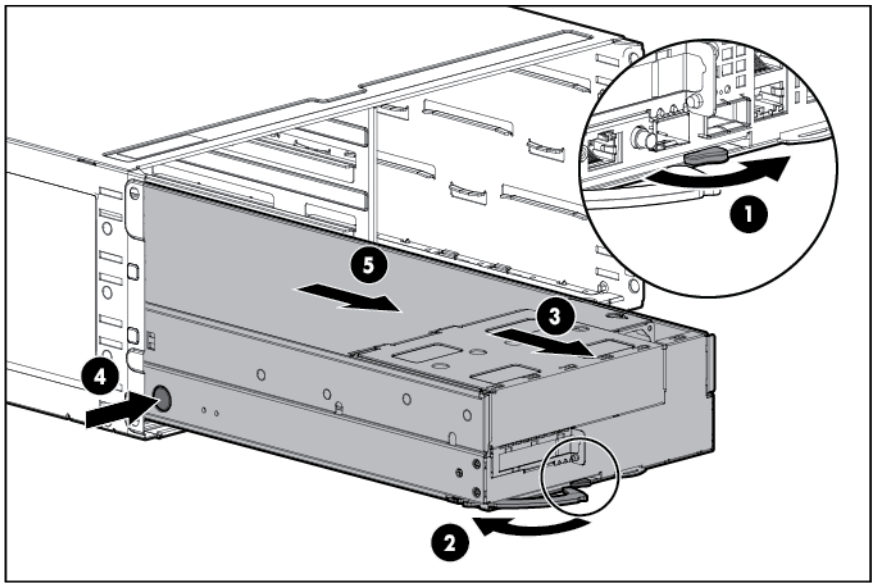

4. Place the server on a flat, level work surface.

Remove the front GPU cage

1. Power down the server (on page 16).
2. Disconnect all peripheral cables from the server.
3. Remove the server from the chassis (on page 16).
4. Remove the front GPU cage.

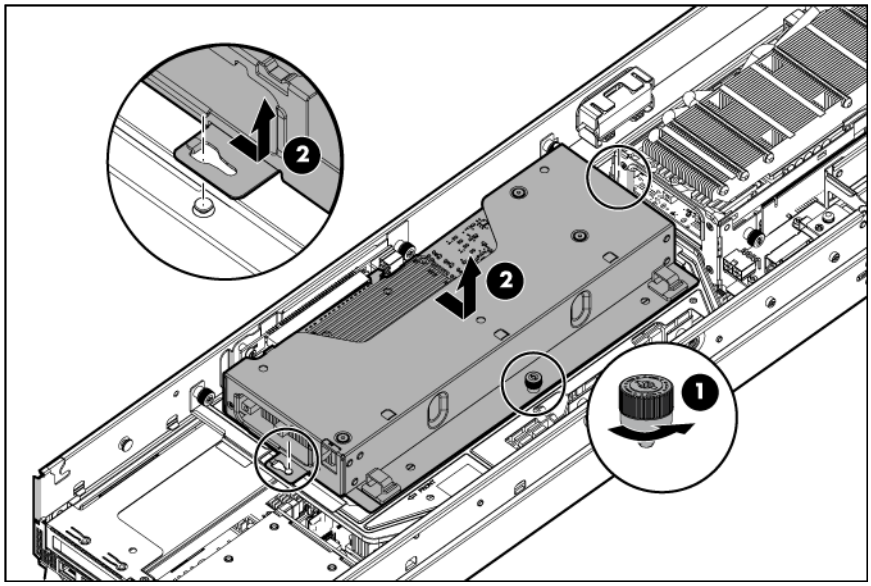

Install the front GPU cage

1. Align the GPU cage with the guiding pins, and then tighten the thumbscrews.

- Left node

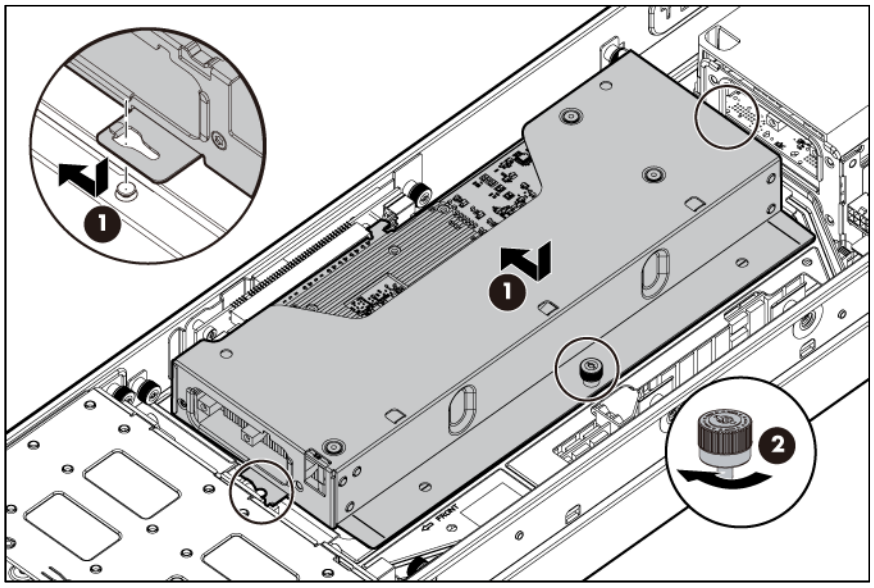

- Right node

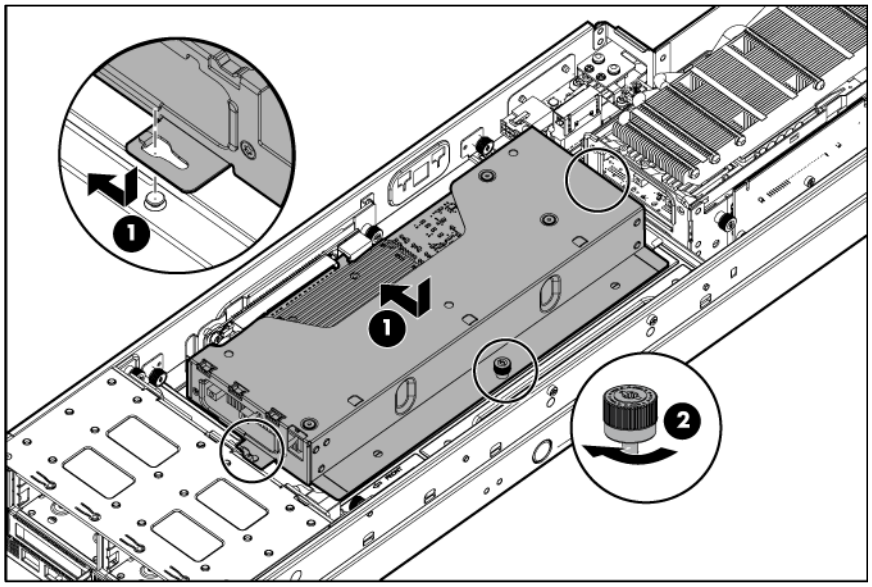

2. Install the server into the chassis ("Installing the server into the chassis" on page 31).
3. Connect all peripheral cables to the server.
4. Power up the server.

Remove the interposer board

1. Power down the server (on page 16).
2. Disconnect all peripheral cables from the server.
3. Remove the server from the chassis (on page 16).
4. Remove the front GPU cage (on page 17).

5. Remove the interposer board.

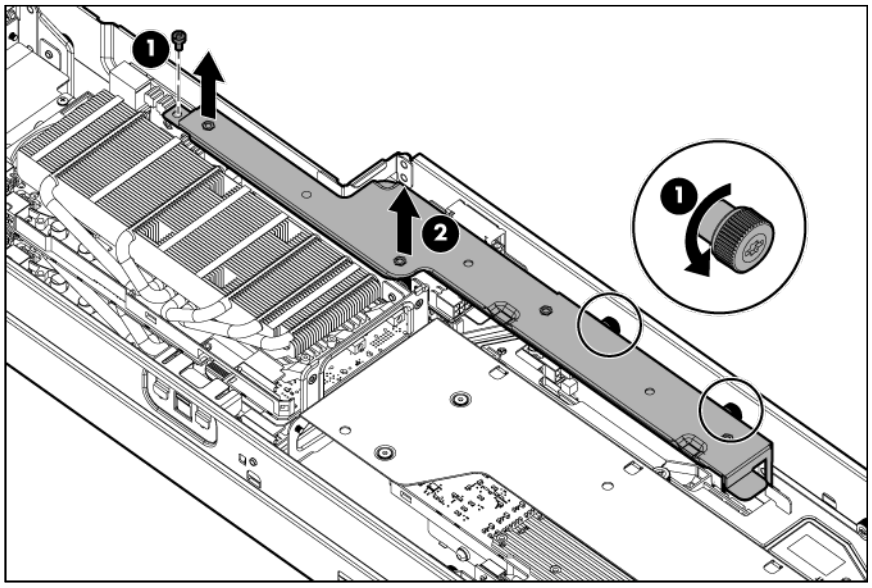

Install the interposer board

1. Install the interposer board.

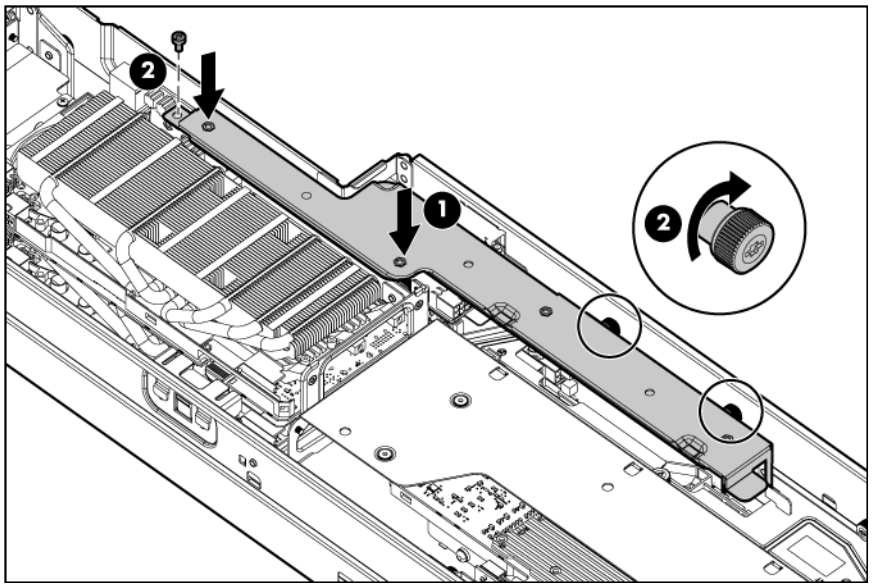

2. Install the front GPU cage (on page 17).
3. Install the server into the chassis ("Installing the server into the chassis" on page 31).
4. Connect all peripheral cables to the server.
5. Power up the server.

Remove the front GPU bracket

1. Power down the server (on page 16).
2. Disconnect all peripheral cables from the server.

3. Remove the server from the chassis (on page 16).
4. Remove the front GPU cage (on page 17).
5. Remove the interposer board assembly ("Remove the interposer board" on page 18).
6. Remove the front GPU bracket.

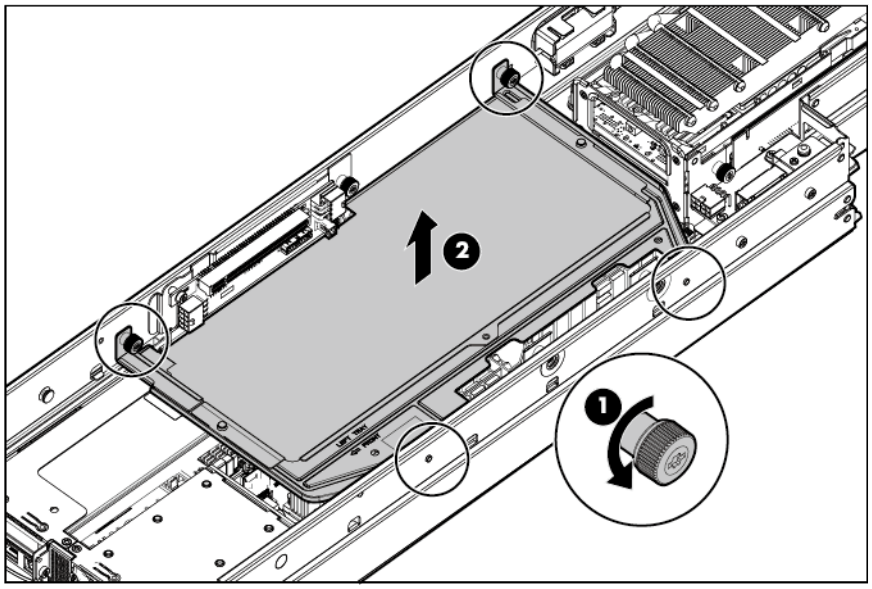

Install the front GPU bracket

1. Install the front GPU bracket into the server, and then tighten the thumbscrews.

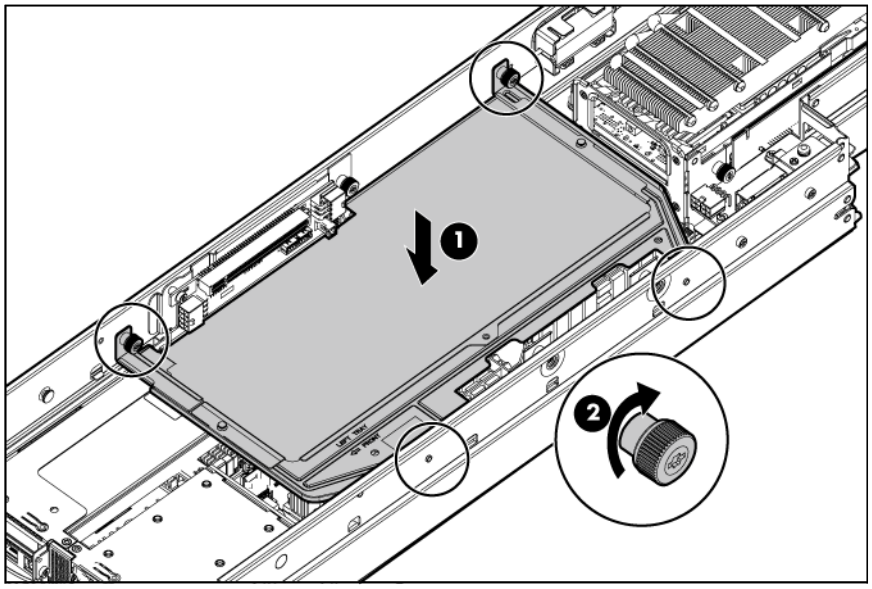

2. Install the interposer board (on page 19).
3. Install the front GPU cage (on page 17).
4. Install the server into the chassis ("Installing the server into the chassis" on page 31).
5. Connect all peripheral cables to the server.
6. Power up the server.

Remove the processor air baffle

1. Power down the server (on page 16).
2. Disconnect all peripheral cables from the server.
3. Remove the server from the chassis (on page 16).
4. Remove the front GPU cage (on page 17).
5. Remove the interposer board assembly ("Remove the interposer board" on page 18).
6. Remove the front GPU bracket (on page 19).
7. Remove the processor air baffle.

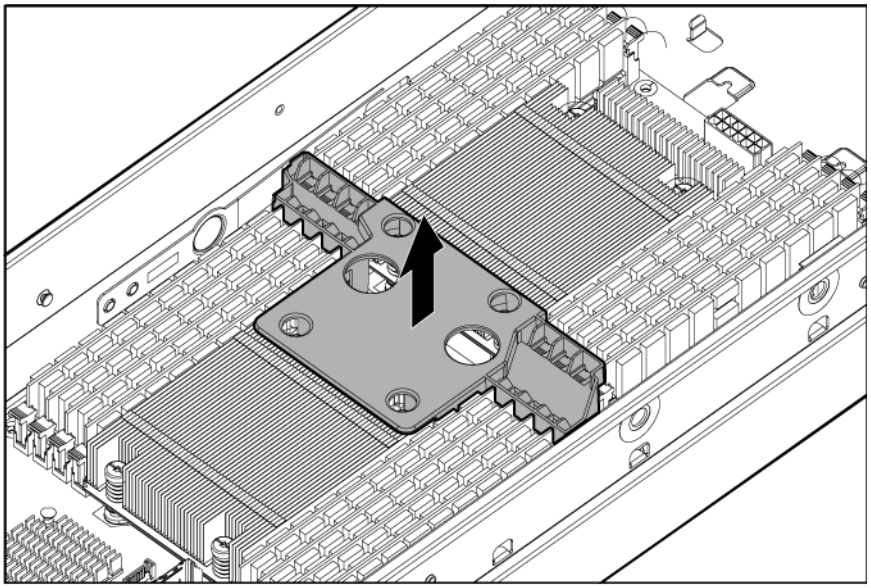

Install the processor air baffle

1. Install the processor air baffle.

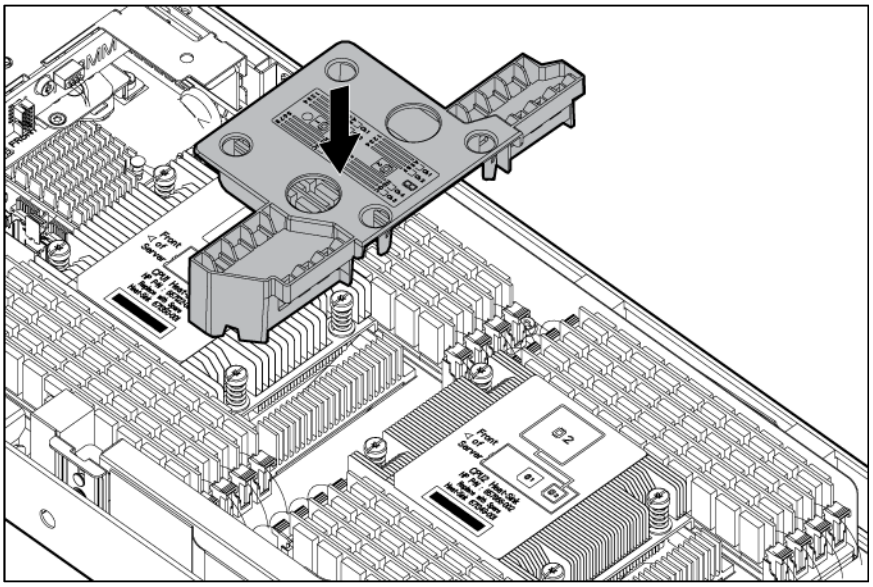

IMPORTANT: If the DIMM latches are not fully closed, the baffle will not sit properly.

2. Install the front GPU bracket (on page 20).
3. Install the interposer board (on page 19).
4. Install the front GPU cage (on page 17).
5. Install the server into the chassis ("Installing the server into the chassis" on page 31).
6. Connect all peripheral cables to the server.
7. Power up the server.

Removing the SFF hot-plug drive cage

1. Power down the server (on page 16).
2. Disconnect all peripheral cables from the server.
3. Remove the server from the chassis (on page 16).
4. Disconnect the drive cables from the drive backplane.
5. Remove the SFF hot-plug drive cage.

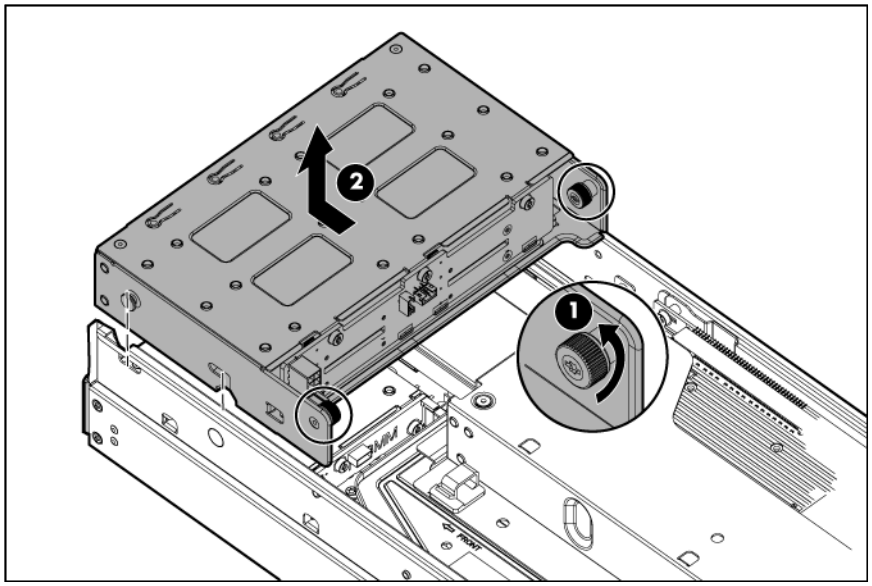

Installing the SFF hot-plug drive cage

1. Install the SFF hot-plug drive cage.

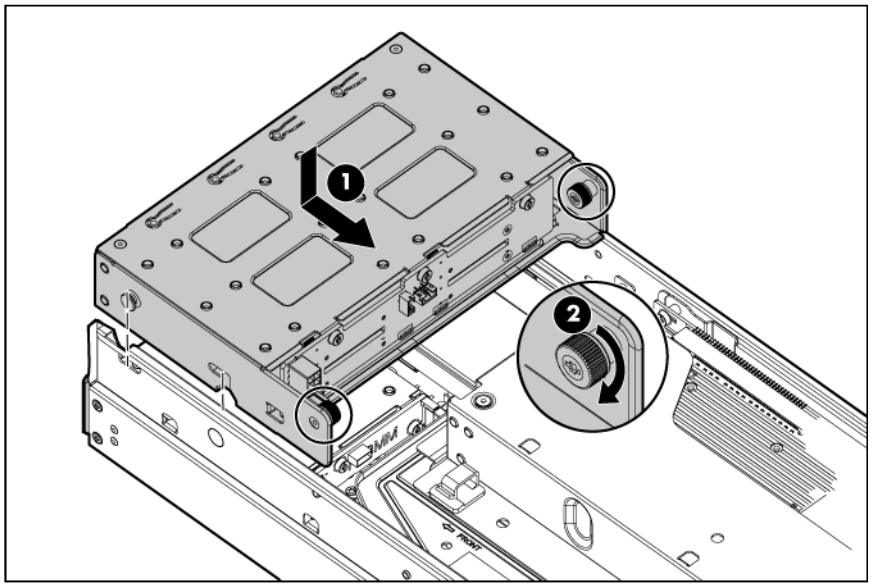

2. Connect the power and Mini-SAS cables to the drive backplane.
3. Install the server into the chassis ("Installing the server into the chassis" on page 31).
4. Connect all peripheral cables to the server.
5. Power up the server.

Remove the PCI riser cage

1. Power down the server (on page 16).
2. Disconnect all peripheral cables from the server.
3. Remove the server from the chassis (on page 16).
4. Remove the SFF hot-plug drive cage ("Removing the SFF hot-plug drive cage" on page 22).
5. Remove the front GPU cage (on page 17).
6. Remove the interposer board (on page 18).
7. Remove the front GPU bracket (on page 19).
8. Remove the PCI riser cage:
   a. Loosen the thumbscrew securing the PCI riser, and then remove the screws securing the PCI riser cage.

b. Lift the cage to remove it from the tray.

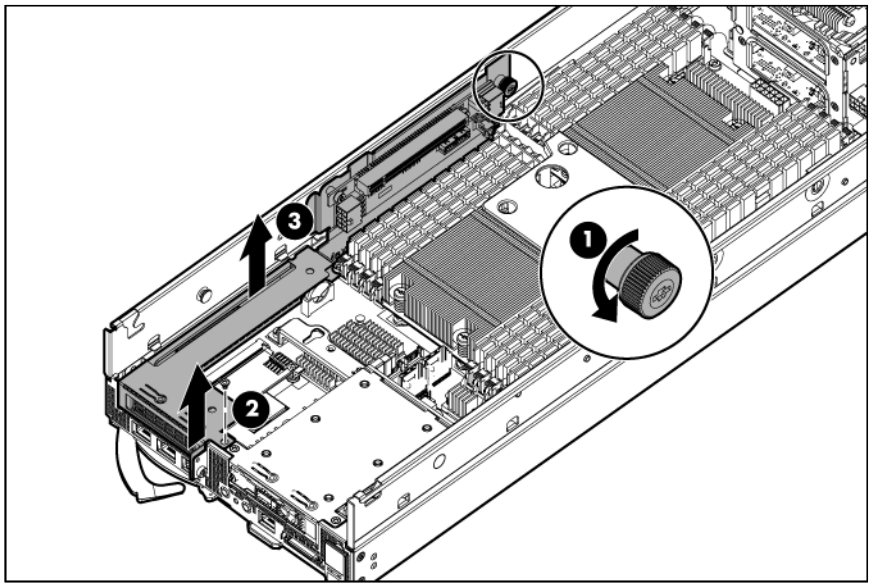

Install the PCI riser cage

1. If necessary, install the expansion boards ("Installing an expansion board" on page 58).
2. Install the PCI riser cage.

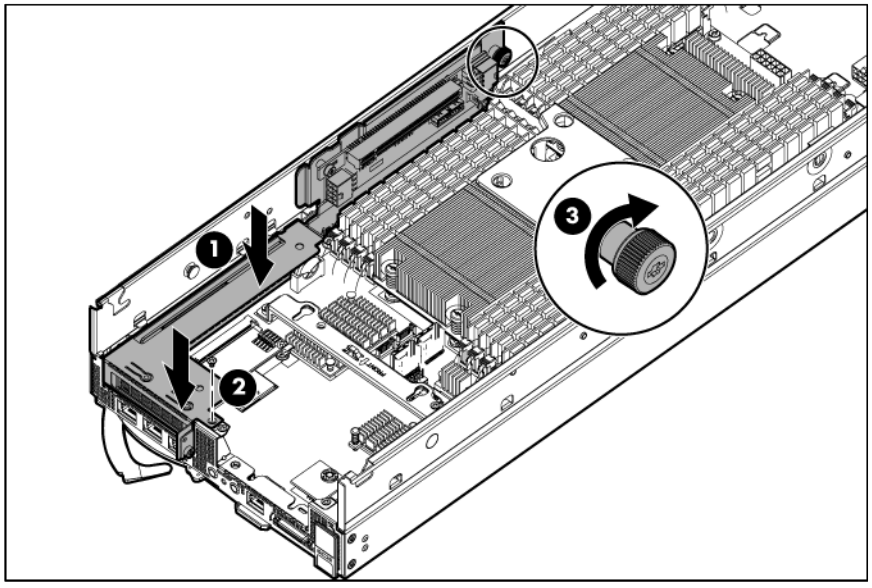

IMPORTANT: The server does not power up if the PCI riser cage is not seated properly.

3. Install the front GPU bracket (on page 20).
4. Install the interposer board (on page 19).
5. Install the front GPU cage (on page 17).
6. Install the SFF hot-plug drive cage ("Installing the SFF hot-plug drive cage" on page 23).
7. Install the server into the chassis ("Installing the server into the chassis" on page 31).

8. Connect all peripheral cables to the server.
9. Power up the server.

Remove the FlexibleLOM riser cage

1. Power down the server (on page 16).
2. Disconnect all peripheral cables from the server.
3. Remove the server from the chassis (on page 16).
4. Remove the SFF hot-plug drive cage ("Removing the SFF hot-plug drive cage" on page 22).
5. Remove the front GPU cage (on page 17).
6. Remove the interposer board (on page 18).
7. Remove the front GPU bracket (on page 19).
8. Remove the FlexibleLOM riser cage:
   a. Remove the screws securing the FlexibleLOM riser cage.
   b. Lift the cage to remove it from the tray.

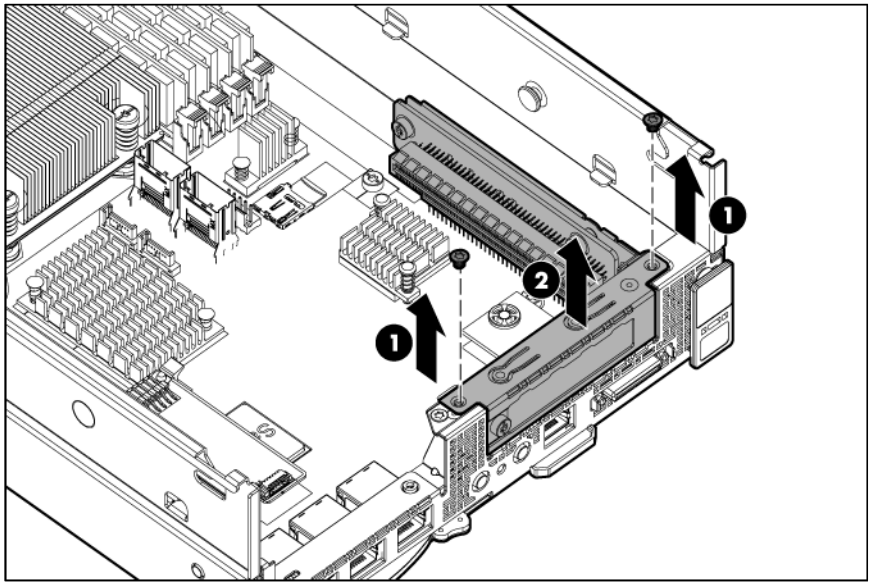

Install the FlexibleLOM riser cage

1. If necessary, install the FlexibleLOM ("Installing an expansion board" on page 58).

2. Install the FlexibleLOM riser cage.

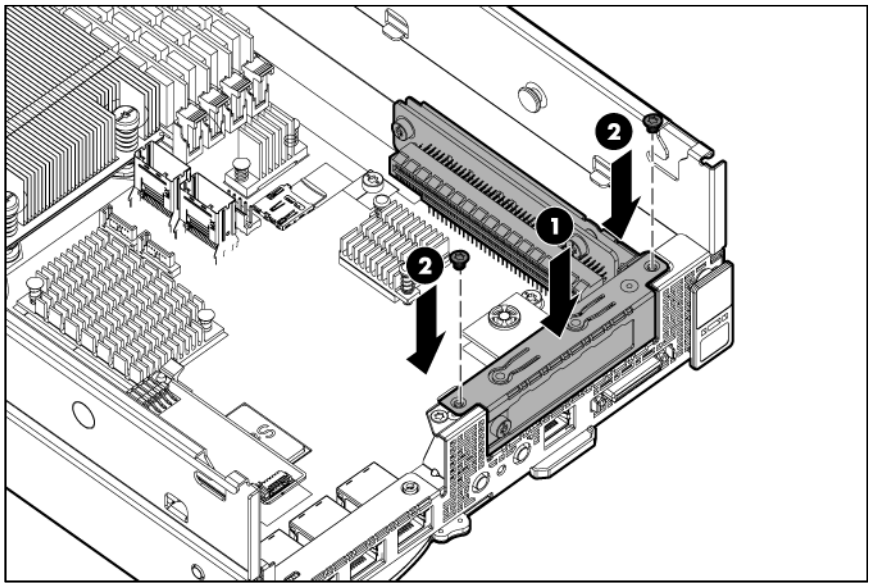

3. Install the front GPU bracket (on page 20).
4. Install the interposer board (on page 19).
5. Install the front GPU cage (on page 17).
6. Install the SFF hot-plug drive cage ("Installing the SFF hot-plug drive cage" on page 23).
7. Install the server into the chassis ("Installing the server into the chassis" on page 31).
8. Connect all peripheral cables to the server.
9. Power up the server.

Setup

Optional installation services

Delivered by experienced, certified engineers, HP Care Pack services help you keep your servers up and running with support packages tailored specifically for HP ProLiant systems. HP Care Packs let you integrate both hardware and software support into a single package. A number of service level options are available to meet your needs.

HP Care Pack Services offer upgraded service levels to expand your standard product warranty with easy-to-buy, easy-to-use support packages that help you make the most of your server investments. Some of the Care Pack services are:

- Hardware support
  - 6-Hour Call-to-Repair
  - 4-Hour 24x7 Same Day
  - 4-Hour Same Business Day
- Software support
  - Microsoft®
  - Linux
  - HP ProLiant Essentials (HP SIM and RDP)
  - VMware
- Integrated hardware and software support
  - Critical Service
  - Proactive 24
  - Support Plus
  - Support Plus 24
- Startup and implementation services for both hardware and software

For more information on HP Care Pack Services, see the HP website (http://www.hp.com/services/carepack).

Optimum environment

When installing the server in a rack, select a location that meets the environmental standards described in this section.

Space and airflow requirements

To allow for servicing and adequate airflow, observe the following space and airflow requirements when deciding where to install a rack:

- Leave a minimum clearance of 63.5 cm (25 in) in front of the rack.
- Leave a minimum clearance of 76.2 cm (30 in) behind the rack.
- Leave a minimum clearance of 121.9 cm (48 in) from the back of the rack to the back of another rack or row of racks.

HP servers draw in cool air through the front door and expel warm air through the rear door. Therefore, the front and rear rack doors must be adequately ventilated to allow ambient room air to enter the cabinet, and the rear door must be adequately ventilated to allow the warm air to escape from the cabinet.

CAUTION: To prevent improper cooling and damage to the equipment, do not block the ventilation openings.

When vertical space in the rack is not filled by a server or rack component, the gaps between the components cause changes in airflow through the rack and across the servers. Cover all gaps with blanking panels to maintain proper airflow.

CAUTION: Always use blanking panels to fill empty vertical spaces in the rack. This arrangement ensures proper airflow. Using a rack without blanking panels results in improper cooling that can lead to thermal damage.

The 9000 and 10000 Series Racks provide proper server cooling from flow-through perforations in the front and rear doors that provide 64 percent open area for ventilation.

CAUTION: When using a Compaq branded 7000 series rack, install the high airflow rack door insert (PN 327281-B21 for 42U rack, PN 157847-B21 for 22U rack) to provide proper front-to-back airflow and cooling.

CAUTION: If a third-party rack is used, observe the following additional requirements to ensure adequate airflow and to prevent damage to the equipment:

- Front and rear doors—If the 42U rack includes closing front and rear doors, you must allow 5,350 sq cm (830 sq in) of holes evenly distributed from top to bottom to permit adequate airflow (equivalent to the required 64 percent open area for ventilation).
- Side—The clearance between the installed rack component and the side panels of the rack must be a minimum of 7 cm (2.75 in).

Temperature requirements

To ensure continued safe and reliable equipment operation, install or position the system in a well-ventilated, climate-controlled environment.

The maximum recommended ambient operating temperature (TMRA) for most server products is 35°C (95°F). The temperature in the room where the rack is located must not exceed 35°C (95°F).

CAUTION: To reduce the risk of damage to the equipment when installing third-party options:

- Do not permit optional equipment to impede airflow around the server or to increase the internal rack temperature beyond the maximum allowable limits.
- Do not exceed the manufacturer's TMRA.

Power requirements

Installation of this equipment must comply with local and regional electrical regulations governing the installation of information technology equipment by licensed electricians. This equipment is designed to operate in installations covered by NFPA 70, 1999 Edition (National Electric Code) and NFPA-75, 1992 (code for Protection of Electronic Computer/Data Processing Equipment). For electrical power ratings on options, refer to the product rating label or the user documentation supplied with that option.

⚠ **WARNING:** To reduce the risk of personal injury, fire, or damage to the equipment, do not overload the AC supply branch circuit that provides power to the rack. Consult the electrical authority having jurisdiction over wiring and installation requirements of your facility.

△ **CAUTION:** Protect the server from power fluctuations and temporary interruptions with a regulating uninterruptible power supply. This device protects the hardware from damage caused by power surges and voltage spikes and keeps the system in operation during a power failure.

When installing more than one server, you might need to use additional power distribution devices to safely provide power to all devices. Observe the following guidelines:

- Balance the server power load between available AC supply branch circuits.
- Do not allow the overall system AC current load to exceed 80% of the branch circuit AC current rating.
- Do not use common power outlet strips for this equipment.
- Provide a separate electrical circuit for the server.

For more information on the hot-plug power supply and calculators to determine server power consumption in various system configurations, see the HP Power Advisor website (http://www.hp.com/go/hppoweradvisor).

Electrical grounding requirements

The server must be grounded properly for proper operation and safety. In the United States, you must install the equipment in accordance with NFPA 70, 1999 Edition (National Electric Code), Article 250, as well as any local and regional building codes. In Canada, you must install the equipment in accordance with Canadian Standards Association, CSA C22.1, Canadian Electrical Code. In all other countries, you must install the equipment in accordance with any regional or national electrical wiring codes, such as the International Electrotechnical Commission (IEC) Code 364, parts 1 through 7. Furthermore, you must be sure that all power distribution devices used in the installation, such as branch wiring and receptacles, are listed or certified grounding-type devices.

Because of the high ground-leakage currents associated with multiple servers connected to the same power source, HP recommends the use of a PDU that is either permanently wired to the building's branch circuit or includes a nondetachable cord that is wired to an industrial-style plug. NEMA locking-style plugs or those complying with IEC 60309 are considered suitable for this purpose. Using common power outlet strips for the server is not recommended.

Rack warnings

⚠ **WARNING:** To reduce the risk of personal injury or damage to the equipment, be sure that:

- The leveling jacks are extended to the floor.
- The full weight of the rack rests on the leveling jacks.
- The stabilizing feet are attached to the rack if it is a single-rack installation.
- The racks are coupled together in multiple-rack installations.
- Only one component is extended at a time. A rack may become unstable if more than one component is extended for any reason.

⚠ **WARNING:** To reduce the risk of personal injury or equipment damage when unloading a rack:

- At least two people are needed to safely unload the rack from the pallet. An empty 42U rack can weigh as much as 115 kg (253 lb), can stand more than 2.1 m (7 ft) tall, and might become unstable when being moved on its casters.
- Never stand in front of the rack when it is rolling down the ramp from the pallet. Always handle the rack from both sides.

Contents of the server shipping carton

Unpack the server shipping carton and locate the materials and documentation necessary for installing the server. All the rack mounting hardware necessary for installing the server into the rack is included with the rack or the server.

The contents of the server shipping carton include:

- Server
- Power cord
- Printed setup documentation and software products
- Rack mounting hardware kit and documentation

In addition to these supplied items, you might need:

- T-10/T-15 Torx screwdriver
- Hardware options
- Operating system or application software

Installing the chassis

The chassis can be installed either in a rack or rack-free environment. For rack installations, install the rack rails, and then install the chassis and other components.

For more information, see the *HP ProLiant s6500 Chassis Setup and Installation Guide*, *Quick Deploy Rail System Installation Instructions* that ship with the rack hardware kit, and applicable installation instructions.

Installing options

Install any hardware options before initializing the server. For options installation information, see the documentation that ships with the option. For server-specific information, see the server user guide on the HP website (http://www.hp.com).

Installing the components

WARNING: The server is very heavy. To reduce the risk of personal injury or damage to the equipment:

- Reduce the weight of the server by removing the hard drives and power supplies before installing the server into the rack.
- At least two people are required to lift the server during installation or removal.

CAUTION: Always plan the rack installation so that the heaviest item is on the bottom of the rack. Install the heaviest item first, and continue to populate the rack from the bottom to the top.

Before installing front or rear components into the chassis, review chassis bay numbering for each component. For slot numbering information, see the quick setup instructions.

Based on the total number ordered and the planned configuration, install the following components:

- Nodes
- Power supplies
- System fans

For more information, see the appropriate chassis setup and installation guide and the node installation instructions.

Installing the server into the chassis

1. Insert the system tray into the chassis.
2. Rotate the tray handle to lock.

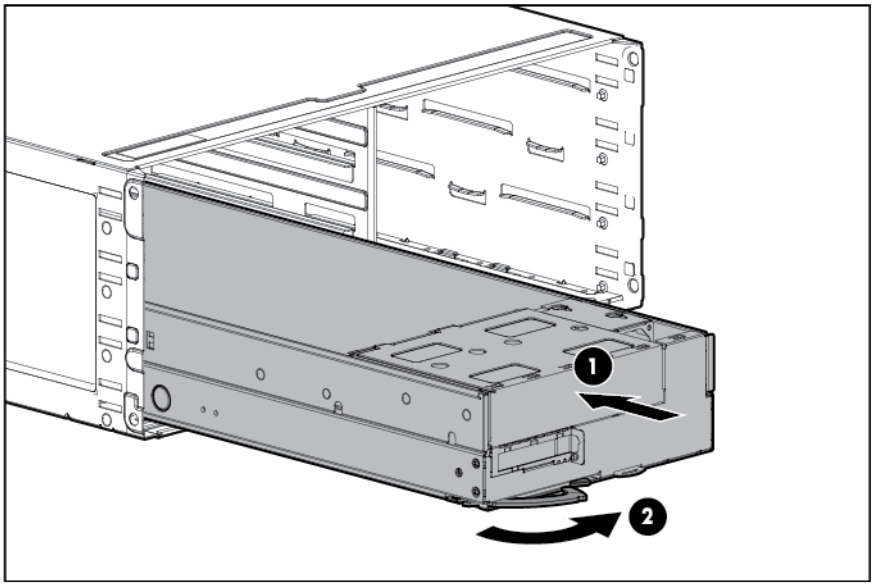

3. Connect peripheral devices to the server.

WARNING: To reduce the risk of electric shock, fire, or damage to the equipment, do not plug telephone or telecommunications connectors into RJ-45 connectors.

4. Connect the power cords to the power supplies.

5. Connect the power cord to the AC power source.

WARNING: To reduce the risk of electric shock or damage to the equipment:

- Do not disable the power cord grounding plug. The grounding plug is an important safety feature.
- Plug the power cord into a grounded (earthed) electrical outlet that is easily accessible at all times.
- Unplug the power cord from the power supply to disconnect power to the equipment.
- Do not route the power cord where it can be walked on or pinched by items placed against it. Pay particular attention to the plug, electrical outlet, and the point where the cord extends from the server.

Powering up the chassis

Connect the AC or DC power cables, depending on the power configuration.

When the circuit breakers are powered, the chassis and HP ProLiant SL Advanced Power Manager have power. By default, each installed component also powers up. Examine the HP ProLiant SL Advanced Power Manager for any errors which may prevent installed components from powering up.

Configuring the chassis

For further information on setting up and configuring your system, see the *HP ProLiant s6500 Chassis Quick Setup Instructions* and the *HP ProLiant s6500 Chassis Setup and Installation Guide*.

Powering on and selecting boot options

WARNING: To reduce the risk of electric shock or damage to the equipment:

- Do not disable the power cord grounding plug. The grounding plug is an important safety feature.
- Plug the power cord into a grounded (earthed) electrical outlet that is easily accessible at all times.
- Unplug the power cord from the power supply to disconnect power to the equipment.
- Do not route the power cord where it can be walked on or pinched by items placed against it. Pay particular attention to the plug, electrical outlet, and the point where the cord extends from the storage system.

1. Connect the power cord to the server.
2. Open the power cord retaining clip, and then thread the power cord through the strain relief clip.
3. To secure the power cord, snap the clip into place.

4. Connect the power cord to the AC power source.

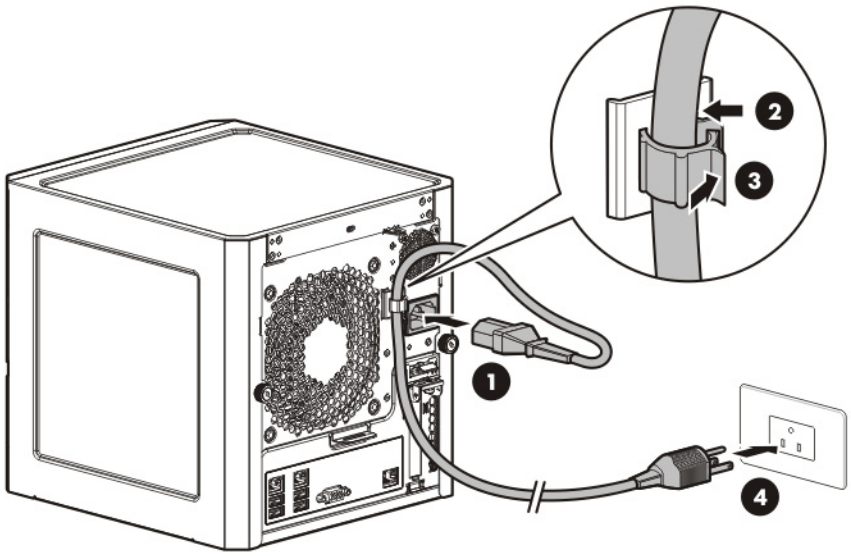

The server automatically turns on after the power cord is connected.

5. Check the server Power LED status . The LED flashes green to indicate that power connection is established.

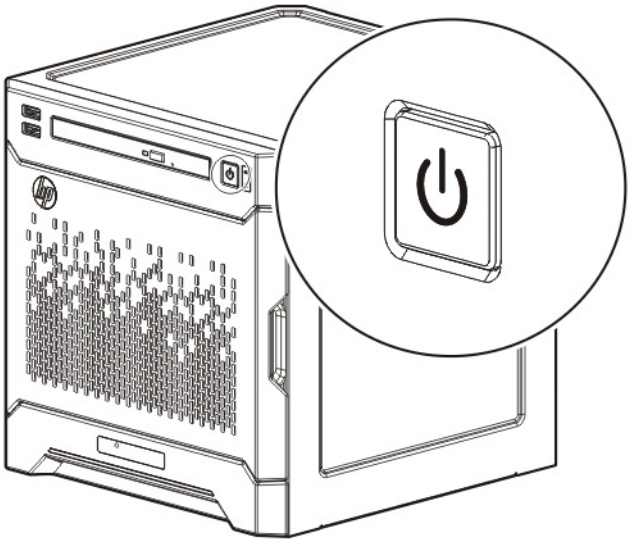

6. During the initial server boot (POST), do one of the following:
   - For advanced users, to modify the server configuration ROM default settings, press **F9** when prompted to enter the RBSU. By default, the RBSU runs in the English language.
   - To retain the HP recommended default server configuration and install the operating system, press **F10** to initiate Intelligent Provisioning. Proceed to the next section.

   For more information on automatic server configuration, see the *HP ROM-Based Setup Utility User Guide* on the Documentation CD or the HP RBSU Information Library (http://www.hp.com/go/rbsu/docs).

Installing the system software

To access and configure Intelligent Provisioning on a single node:

1. Access Intelligent Provisioning by rebooting the server and pressing **F10**.
2. The first time you log into Intelligent Provisioning, follow the steps to set preferences and activate Intelligent Provisioning.
3. From the Home screen, click **Perform Maintenance**, and then click **Firmware Update**.
4. Ensure the latest drivers are available for installation. Select **Intelligent Provisioning Software** from the list of firmware, and click **Update**. If the check box is not selected, the latest drivers are already installed.

Registering the server

To experience quicker service and more efficient support, register the product at the HP Product Registration website (http://register.hp.com).

Hardware options installation

Introduction

If more than one option is being installed, read the installation instructions for all the hardware options and identify similar steps to streamline the installation process.

WARNING: To reduce the risk of personal injury from hot surfaces, allow the drives and the internal system components to cool before touching them.

CAUTION: To prevent damage to electrical components, properly ground the server before beginning any installation procedure. Improper grounding can cause electrostatic discharge.

Processor option

CAUTION: To avoid damage to the processor and system board, only authorized personnel should attempt to replace or install the processor in this server.

CAUTION: To prevent possible server malfunction and damage to the equipment, multiprocessor configurations must contain processors with the same part number.

To install the processor:

1. Update the system ROM.

   Locate and download the latest ROM version from the HP website (http://www.hp.com/support). Follow the instructions on the website to update the system ROM.
2. Power down the server (on page 16).
3. Disconnect all peripheral cables from the server.
4. Remove the server from the chassis (on page 16).
5. Remove the front GPU cage (on page 17).
6. Remove the interposer board (on page 18).
7. Remove the front GPU bracket (on page 19).
8. Remove the processor air baffle (on page 21).

WARNING: To reduce the risk of personal injury from hot surfaces, allow the heatsink to cool before touching it.

WARNING: To reduce the risk of personal injury from hot surfaces, allow the drives and the internal system components to cool before touching them.

CAUTION: To prevent possible server malfunction and damage to the equipment, multiprocessor configurations must contain processors with the same part number.

CAUTION: To prevent possible server overheating, always populate processor socket 2 with a processor and a heatsink or a processor socket cover and a heatsink blank.

IMPORTANT: Processor socket 1 must be populated at all times or the server does not function.

9. Open each of the processor locking levers in the order indicated, and then open the processor retaining bracket.

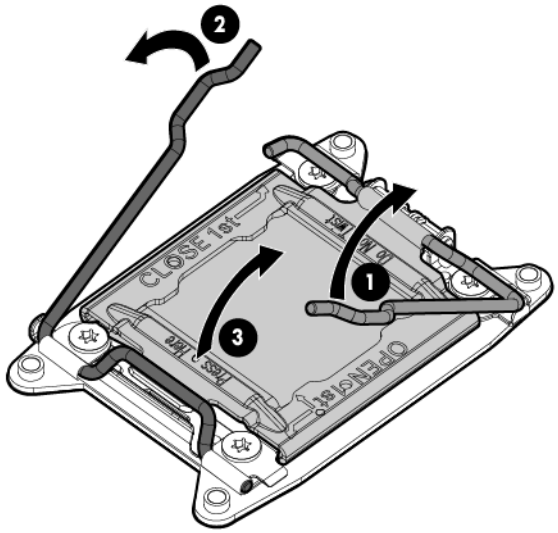

10. Remove the clear processor socket cover. Retain the processor socket cover for future use.

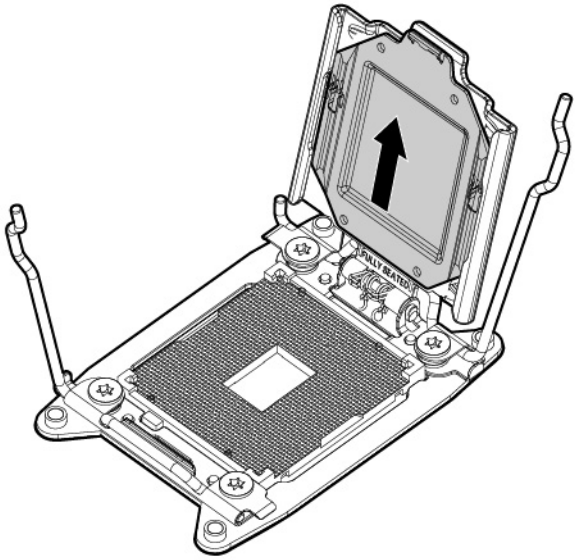

11. Install the processor. Verify that the processor is fully seated in the processor retaining bracket by visually inspecting the processor installation guides on either side of the processor. **THE PINS ON THE SYSTEM BOARD ARE VERY FRAGILE AND EASILY DAMAGED.**

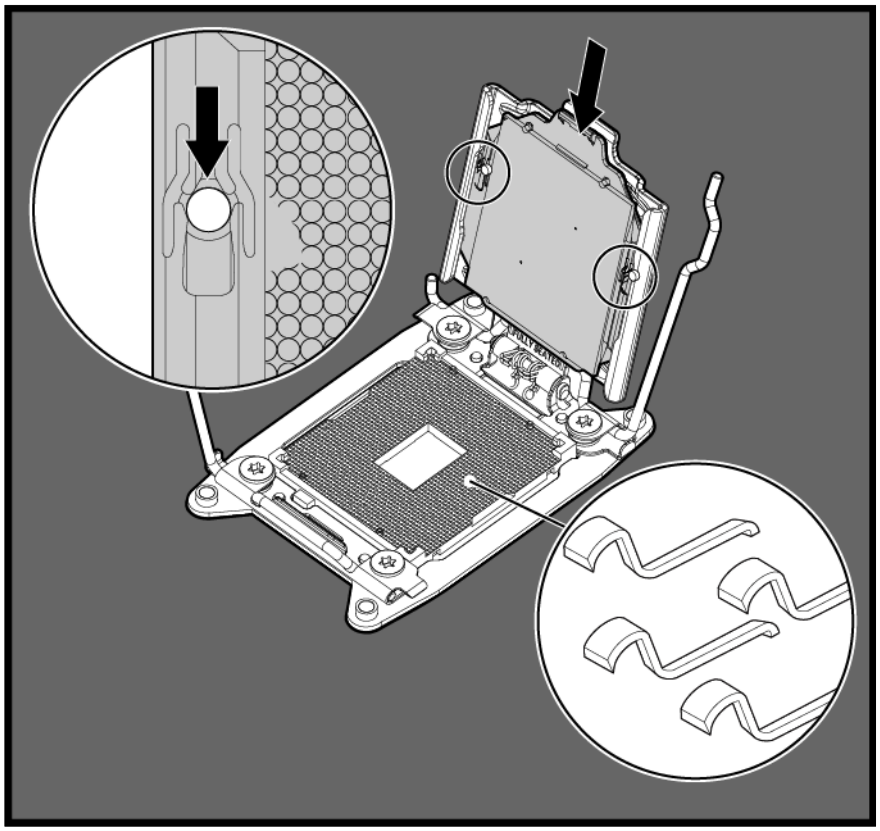

△ **CAUTION: THE PINS ON THE SYSTEM BOARD ARE VERY FRAGILE AND EASILY DAMAGED.** To avoid damage to the system board, do not touch the processor or the processor socket contacts.

12. Close the processor retaining bracket. When the processor is installed properly inside the processor retaining bracket, the processor retaining bracket clears the flange on the front of the socket.

△ **CAUTION:** Do not press down on the processor. Pressing down on the processor may cause damage to the processor socket and the system board. Press only in the area indicated on the processor retaining bracket.

13. Press and hold the processor retaining bracket in place, and then close each processor locking lever. Press only in the area indicated on the processor retaining bracket.

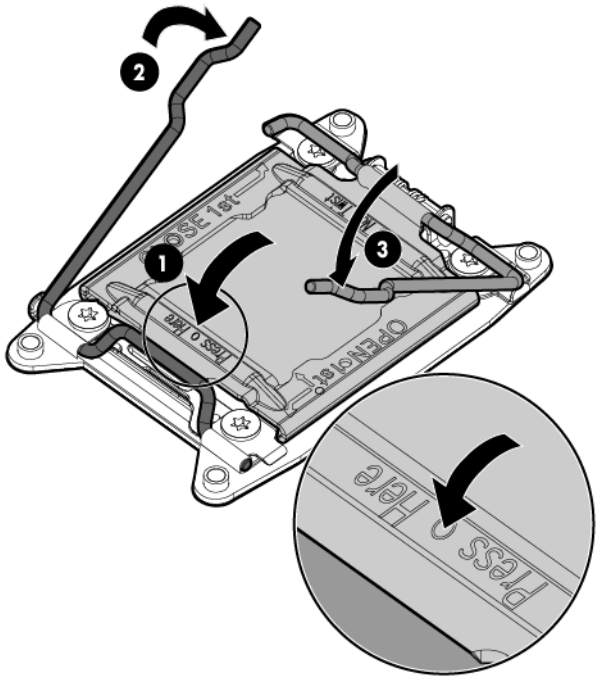

14. Remove the thermal interface protective cover from the heatsink.

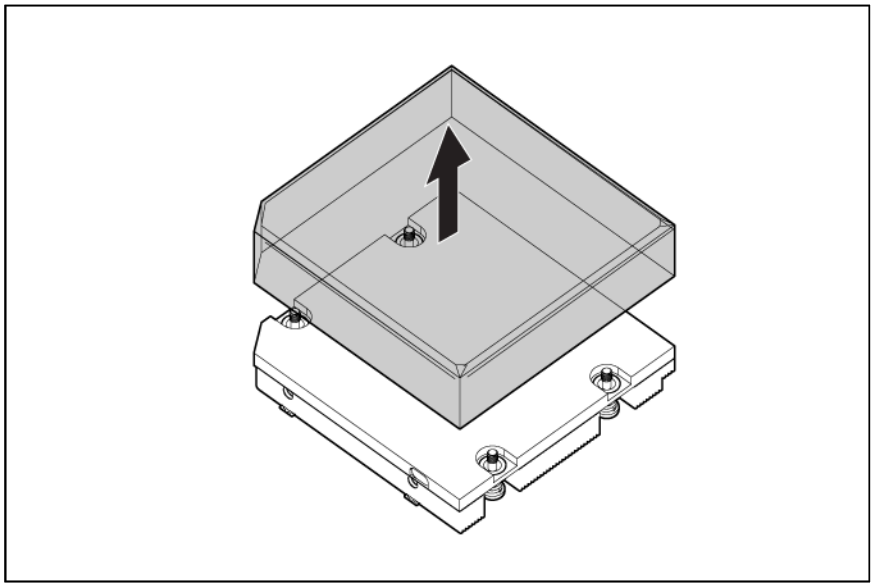

△ **CAUTION:** Heatsinks specified for processor 1 and 2 are not interchangeable. Be sure to note the appropriate orientation on the heatsink label.

△ **CAUTION:** Heatsink retaining screws should be tightened or loosened in diagonally opposite pairs (in an "X" pattern). Do not overtighten the screws as this can damage the board, connectors, or screws. Use the wrench supplied with the system to reduce the possibility of overtightening the screws.

15. Install the heatsink:

a. Position the heatsink on the processor backplate.
b. Tighten one pair of diagonally opposite screws halfway, and then tighten the other pair of screws.
c. Finish the installation by completely tightening the screws in the same sequence.

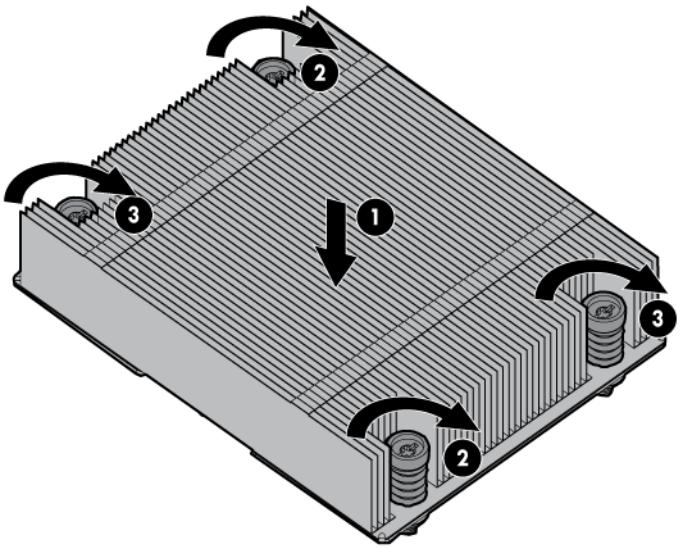

16. Install the processor air baffle (on page 21).
17. Install the front GPU bracket (on page 20).
18. Install the interposer board (on page 19).
19. Install the front GPU cage (on page 17).
20. Install the server into the chassis ("Installing the server into the chassis" on page 31).
21. Connect all peripheral cables to the server.
22. Power up the server.

Memory options

IMPORTANT: This server does not support mixing RDIMMs and UDIMMs. Attempting to mix any combination of these DIMMs can cause the server to halt during BIOS initialization.

The memory subsystem in this server can support RDIMMs or UDIMMs. Both types are referred to as DIMMs when the information applies to all three types. When specified as RDIMM or UDIMM, the information applies to that type only. All memory installed in the server must be the same type.

The server supports the following DIMM speeds:

- Single-rank and dual-rank PC3-12800 (DDR3-1600) DIMMs operating at 1600, 1333, and 1066 MHz
- Single-rank and dual-rank PC3-10600 (DDR3-1333) DIMMs operating at 1333 and 1066 MHz
- Quad-rank PC3-14900L (DDR3-1866) LRDIMMs operating at 1866 MHz

Depending on the processor model, the number of DIMMs installed, and whether UDIMMs or RDIMMs are installed, the memory clock speed might be reduced to 1333, 1066 or 800 MHz. For more information on the effect of DIMM slot population, see "General DIMM slot population guidelines (on page 43)."

HP SmartMemory

HP SmartMemory, introduced for Gen8 servers, authenticates and unlocks certain features available only on HP Qualified memory and verifies whether installed memory has passed HP qualification and test processes. Qualified memory is performance-tuned for HP ProLiant and BladeSystem servers and provides future enhanced support through HP Active Health and manageability software.

Certain performance features are unique with HP SmartMemory. HP SmartMemory 1.35V DDR3-1333 Registered memory is engineered to achieve the same performance level as 1.5V memory. For example, while the industry supports DDR3-1333 RDIMM at 1.5V, this Gen8 server supports DDR3-1333 RDIMM at 1.35V. This difference equates to up to 20% less power at the DIMM level with no performance penalty.

Memory subsystem architecture

The memory subsystem in this server is divided into channels. Each processor supports four channels, and each channel supports two DIMM slots, as shown in the following table.

Channel	Slot	Slot number
1	A E	1 2
2	B F	3 4
3	C G	8 7
4	D H	6 5

For the location of the slot numbers, see "DIMM slot locations (on page 11)."

This multi-channel architecture provides enhanced performance in Advanced ECC mode. This architecture also enables the Lockstep memory mode.

DIMM slots in this server are identified by number and by letter. Letters identify the population order. Slot numbers indicate the DIMM slot ID for spare replacement.

Single-, dual-, and quad-rank DIMMs

To understand and configure memory protection modes properly, an understanding of single-, dual-, and quad-rank DIMMs is helpful. Some DIMM configuration requirements are based on these classifications.

A single-rank DIMM has one set of memory chips that is accessed while writing to or reading from the memory. A dual-rank DIMM is similar to having two single-rank DIMMs on the same module, with only one rank accessible at a time. A quad-rank DIMM is, effectively, two dual-rank DIMMs on the same module. Only one rank is accessible at a time. The server memory control subsystem selects the proper rank within the DIMM when writing to or reading from the DIMM.

Dual- and quad-rank DIMMs provide the greatest capacity with the existing memory technology. For example, if current DRAM technology supports 2-GB single-rank DIMMs, a dual-rank DIMM would be 4-GB, and a quad-rank DIMM would be 8-GB.

DIMM identification

To determine DIMM characteristics, use the label attached to the DIMM and the following illustration and table.

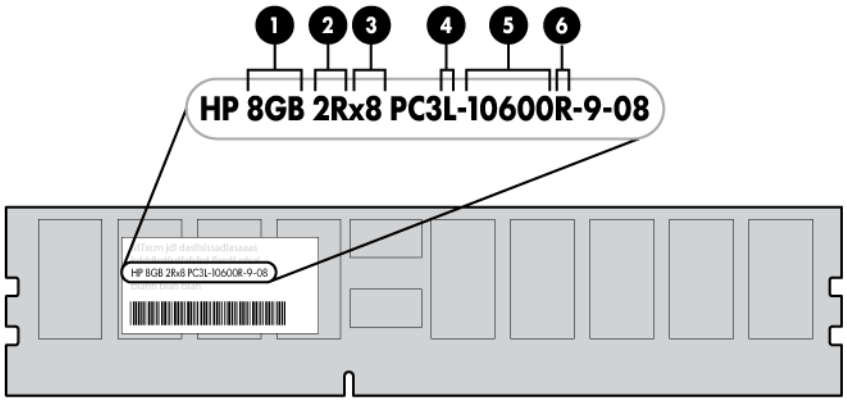

Item	Description	Definition
1	Size	—
2	Rank	1R = Single-rank 2R = Dual-rank 3R = Three-rank 4R = Quad-rank
3	Data width	x4 = 4-bit x8 = 8-bit
4	Voltage rating	L = Low voltage (1.35V) U = Ultra low voltage (1.25V) Blank or omitted = Standard
5	Memory speed	14900 = 1866-MT/s 12800 = 1600-MT/s 10600 = 1333-MT/s 8500 = 1066-MT/s
6	DIMM type	R = RDIMM (registered) E = UDIMM (unbuffered with ECC) L = LRDIMM (load reduced) H = HDIMM (HyperCloud)

Memory protection modes

To optimize server availability, the server supports the following AMP modes:

- Advanced ECC—Provides up to 4-bit error correction and enhanced performance over Lockstep memory mode. This mode is the default option for the server.
- Online Spare Memory—Provides protection against failing or degraded DIMMs. Certain memory is reserved as spare, and automatic failover to spare memory occurs when the system detects a DIMM that

is degrading. This enables DIMMs that have a higher probability of receiving an uncorrectable memory error (which results in system downtime) to be removed from operation.

The server also can operate in independent channel mode or combined channel mode (Lockstep Memory mode). When running in Lockstep Memory mode, you gain reliability in one of two ways:

- If running with UDIMMs (built with x8 DRAM devices), the system can survive a complete DRAM failure (SDDC). In independent channel mode, this failure would be an uncorrectable error.
- If running with RDIMM (built with x4 DRAM devices), the system can survive the complete failure of two DRAM devices (DDDC). Running in independent mode, the server can only survive the complete failure of a single DRAM device (SDDC).

Advanced Memory Protection options are configured in RBSU. If the requested AMP mode is not supported by the installed DIMM configuration, the server boots in Advanced ECC mode. For more information, see "HP ROM-Based Setup Utility (on page 89)."

Maximum memory configurations

The server supports a maximum of 256 GB of memory with one processor (8 x 32 GB), or 512 GB of memory with two processors (16 x 32 GB).

Advanced ECC memory configuration

Advanced ECC memory is the default memory protection mode for this server. Standard ECC can correct single-bit memory errors and detect multi-bit memory errors. When multi-bit errors are detected using Standard ECC, the error is signaled to the server and causes the server to halt.

Advanced ECC protects the server against some multi-bit memory errors. Advanced ECC can correct both single-bit memory errors and 4-bit memory errors if all failed bits are on the same DRAM device on the DIMM.

Advanced ECC provides additional protection over Standard ECC because it is possible to correct certain memory errors that would otherwise be uncorrected and result in a server failure. Using HP Advanced Memory Error Detection technology, the server provides notification when a DIMM is degrading and has a higher probability of uncorrectable memory error.

Online Spare memory configuration

Online spare memory provides protection against degraded DIMMs by reducing the likelihood of uncorrected memory errors. This protection is available without any operating system support.

Online spare memory protection dedicates one rank of each memory channel for use as spare memory. The remaining ranks are available for OS and application use. If correctable memory errors occur at a rate higher than a specific threshold on any of the non-spare ranks, the server automatically copies the memory contents of the degraded rank to the online spare rank. The server then deactivates the failing rank and automatically switches over to the online spare rank.

Lockstep memory configuration

Lockstep mode provides protection against multi-bit memory errors that occur on the same DRAM device. Lockstep mode can correct any single DRAM device failure on x4 and x8 DIMM types. The DIMMs in each channel must have identical HP part numbers.

Maximum capacity

DIMM type	DIMM rank	One processor	Two processors
RDIMM	Single-rank	64GB	128 GB
RDIMM	Dual-rank	128 GB	256 GB
UDIMM	Single-rank	16 GB	32 GB
UDIMM	Dual-rank	64 GB	128GB
LRDIMM	Quad-rank	256 GB	512 GB

General DIMM slot population guidelines

Observe the following guidelines for all AMP modes:

- Install DIMMs only if the corresponding processor is installed.
- When two processors are installed, balance the DIMMs across the two processors.
- White DIMM slots denote the first slot of a channel (Ch 1-A, Ch 2-C, Ch 3-B, Ch 4-D).
- Do not mix RDIMMs or UDIMMs.
- When one processor is installed, install DIMMs in sequential alphabetic order: A, B, C, D, E, F, and so forth.
- When two processors are installed, install the DIMMs in sequential alphabetic order balanced between the two processors: P1-A, P2-A, P1-B, P2-B, P1-C, P2-C, and so forth.
- For DIMM spare replacement, install the DIMMs per slot number as instructed by the system software.

For detailed memory configuration rules and guidelines, use the Online DDR3 Memory Configuration Tool on the HP website (http://www.hp.com/go/ddr3memory-configurator).

The following DIMM speeds are supported in this server.

Populated slots (per channel)	Rank	Speeds supported (MHz)*	Speeds supported (MHz)**
1	Single or dual	1066, 1333, 1600	1333, 1600, 1866
2	Single or dual	1066, 1333, 1600	1333, 1600, 1866
1	Quad	-	1866
2	Quad	-	1866

*Intel Xeon Processor E5-2600 series
**Intel Xeon Processor E5-2600 v2 series

Advanced ECC population guidelines

For Advanced ECC mode configurations, observe the following guidelines:

- Observe the general DIMM slot population guidelines (on page 43).
- DIMMs may be installed individually.

Online Spare population guidelines

For Online Spare memory mode configurations, observe the following guidelines:

- Observe the general DIMM slot population guidelines.

- Each channel must have a valid online spare configuration.
- Each channel can have a different valid online spare configuration.
- Each populated channel must have a spare rank. A single dual-rank DIMM is not a valid configuration.

Lockstep Memory population guidelines

For Lockstep memory mode configurations, observe the following guidelines:

- Observe the general DIMM slot population guidelines (on page 43).
- DIMM configuration on all channels of a processor must be identical.
- In multi-processor configurations, each processor must have a valid Lockstep Memory configuration.
- In multi-processor configurations, each processor may have a different valid Lockstep Memory configuration.

Population order

For memory configurations with a single processor or multiple processors, populate the DIMM sequentially in alphabetical order (A through H).

After installing the DIMMs, use RBSU to configure Advanced ECC, online spare, or lockstep memory support.

Installing a DIMM

CAUTION: To avoid damage to the drives, memory, and other system components, the air baffle, and drive blanks must be installed when the server is powered up.

1. Power down the server (on page 16).
2. Disconnect all peripheral cables from the server.
3. Remove the server from the chassis (on page 16).
4. Remove the front GPU cage (on page 17).
5. Remove the interposer board (on page 18).
6. Remove the front GPU bracket (on page 19).
7. Remove the processor air baffle (on page 21).
8. Open the DIMM slot latches.

9. Install the DIMM.

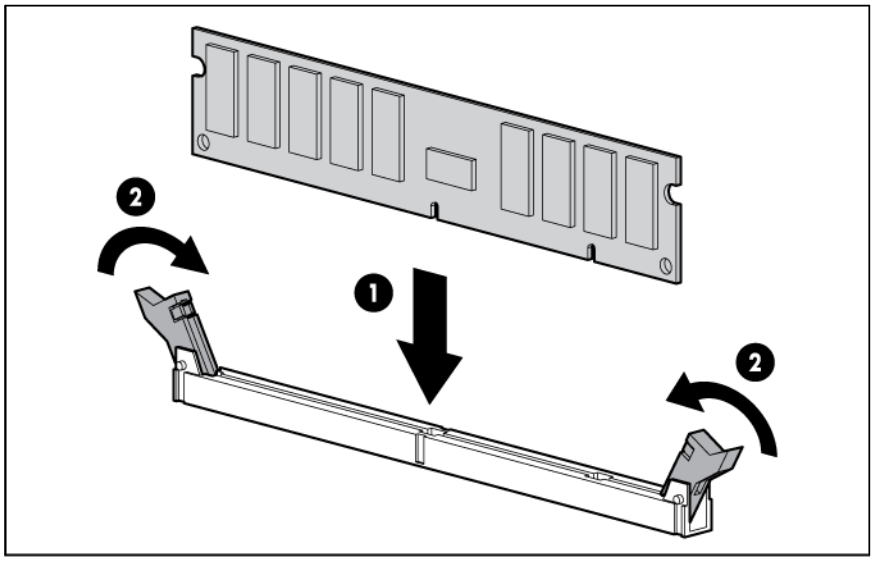

10. Install the processor air baffle (on page 21).
11. Install the front GPU bracket (on page 20).
12. Install the interposer board (on page 19).
13. Install the front GPU cage (on page 17).
14. Install the server into the chassis ("Installing the server into the chassis" on page 31).
15. Connect all peripheral cables to the server.
16. Power up the server.

If you are installing DIMMs in online spare, mirrored, or lock-step configuration, configure this mode in RBSU ("HP ROM-Based Setup Utility" on page 89).

For more information about LEDs and troubleshooting failed DIMMs, see "Systems Insight Display LED combinations."

Drive guidelines

When adding drives to the server, observe the following general guidelines:

- The system automatically sets all device numbers.
- If only one drive is used, install it in the bay with the lowest device number.
- To provide the greatest storage space efficiency when drives are grouped together into the same drive array, drives must be the same capacity.

Installing a hot-plug drive

1. Remove the drive blank.

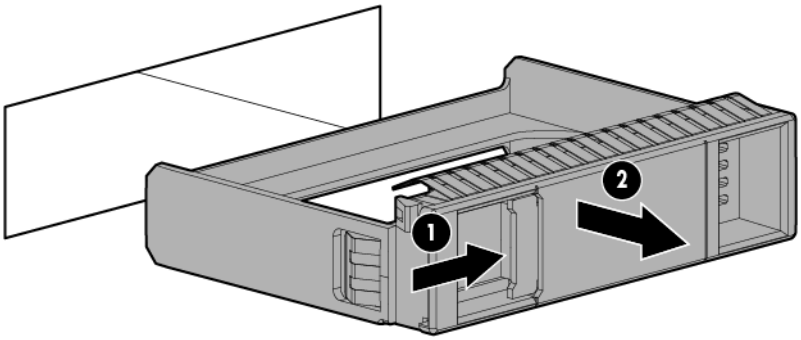

2. Prepare the drive.

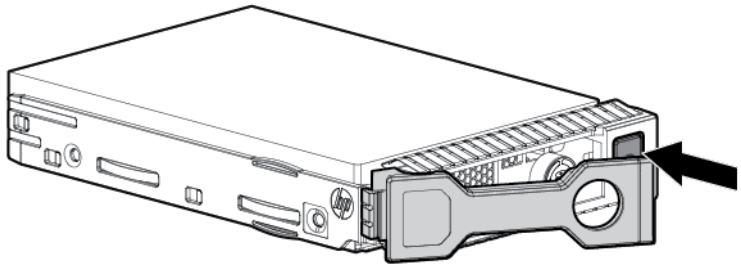

3. Install the drive.

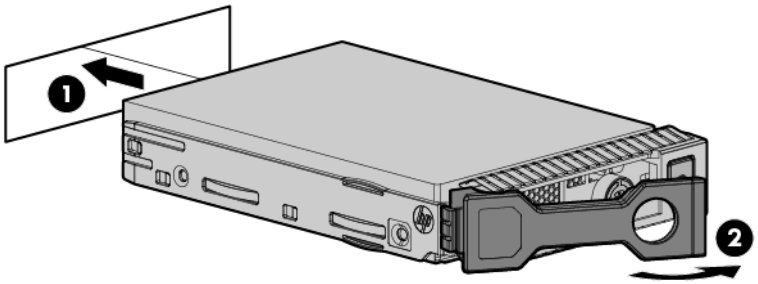

4. Determine the status of the drive from the drive LED definitions ("Hot-plug drive LED definitions" on page 14).

Installing SFF quick-release drive cages

1. Power down the server (on page 16).
2. Disconnect all peripheral cables from the server.
3. Remove the server from the chassis (on page 16).

4. Remove the front GPU cage (on page 17).
5. Remove the interposer board (on page 18).
6. Remove the front GPU bracket (on page 19).
7. Attach the Mini-SAS cable to Mini-SAS connector port 1i on the system board.

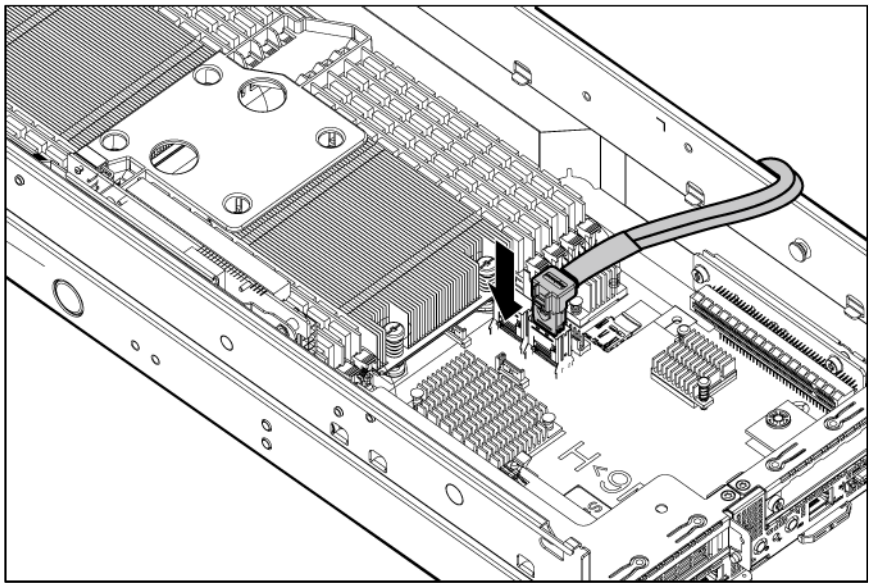

8. Attach the power connectors to the personality board. The power connectors can plug into either port on the personality board.

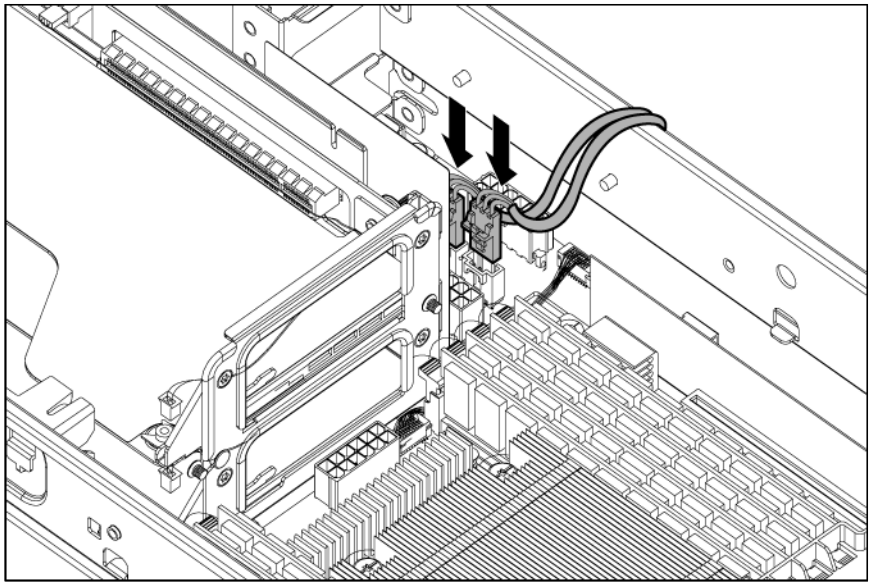

9. Remove the GPU blank from the cage.

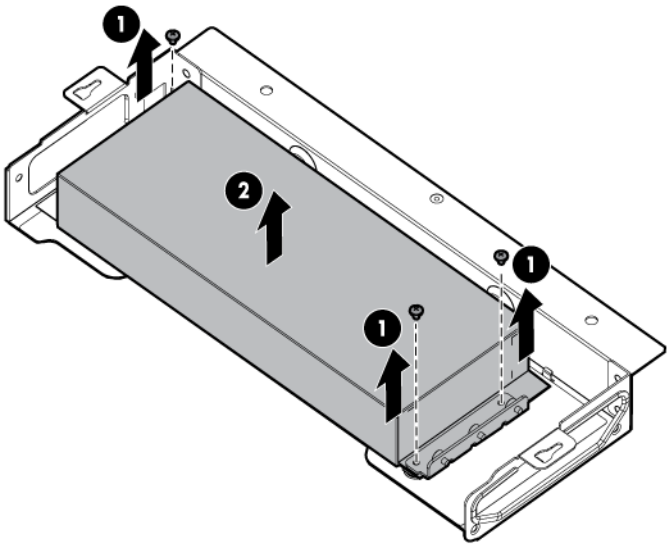

10. Using the six M2.5 screws included with the GPU cage and the four flathead screws included in the option kit, attach the drive cages to the GPU cages:
    - Front GPU cage

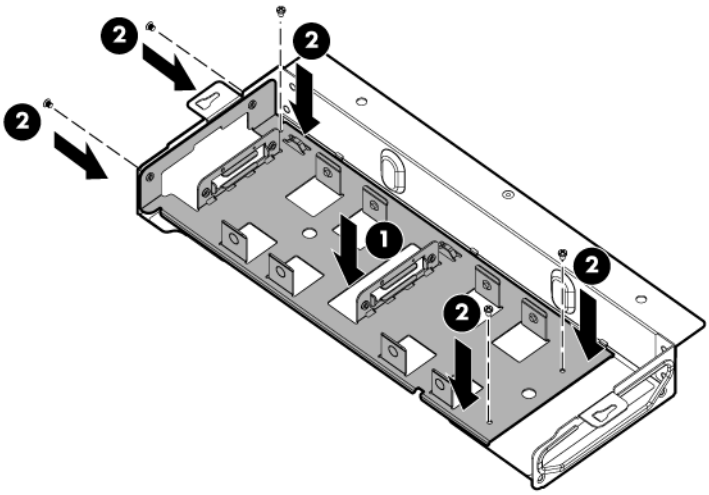

- Top rear GPU cage

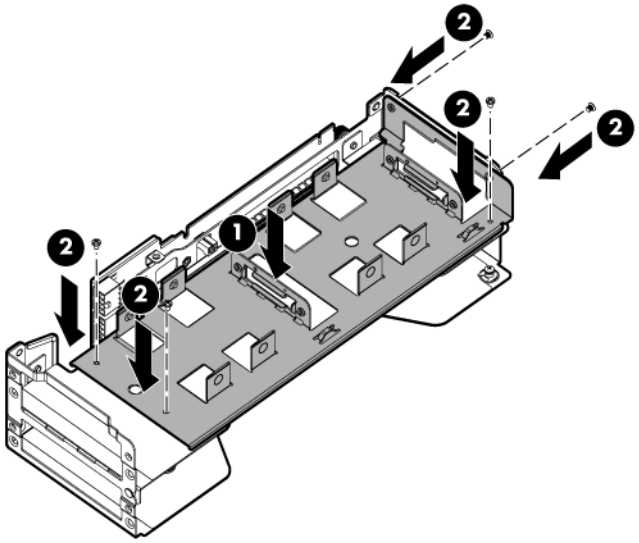

11. Using the eight T-15 screws included in the option kit, attach the SFF cable to the drive cages:
    - Front drive cage

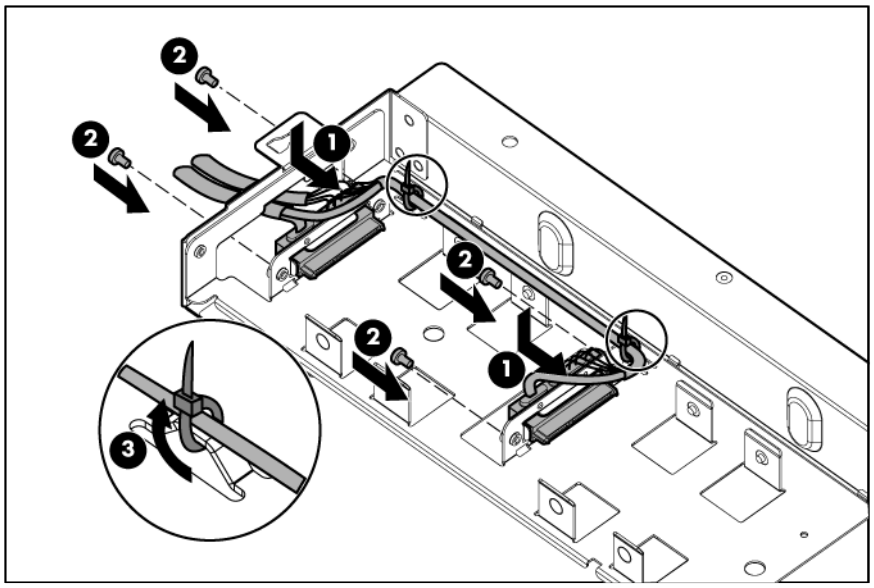

- Rear drive cage

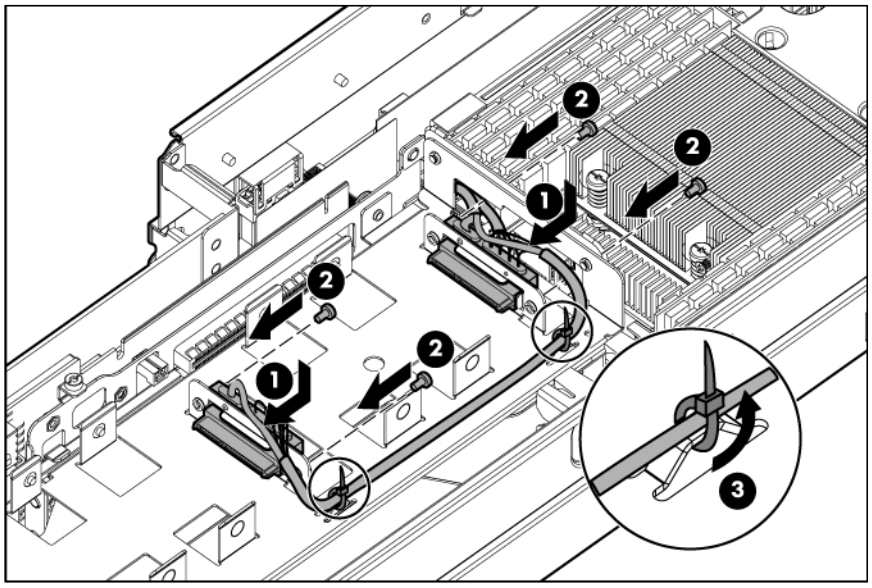

12. Install the quick-release drives in the front and rear drive cages ("Installing a quick-release drive" on page 51).
13. Route the SFF cable as indicated in the following illustrations:
    - Left node

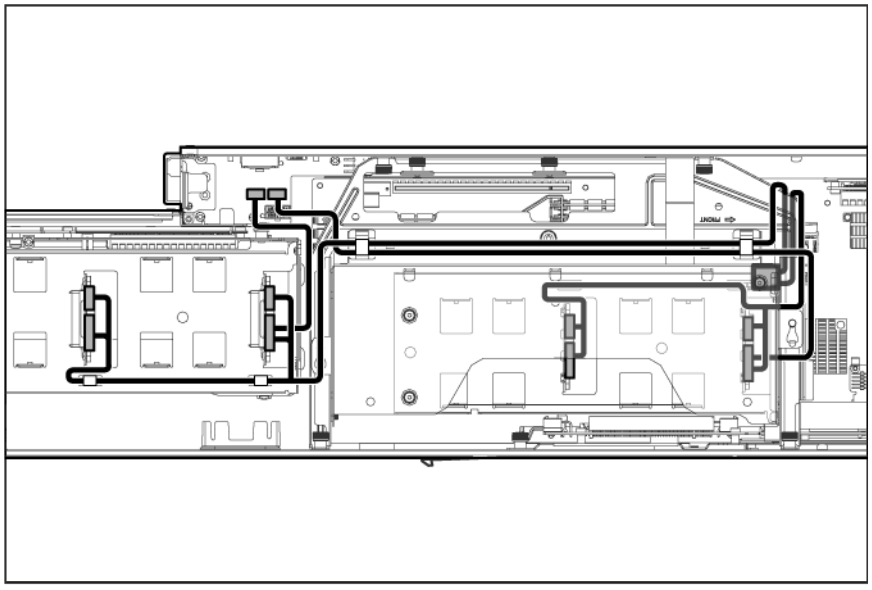

- Right node

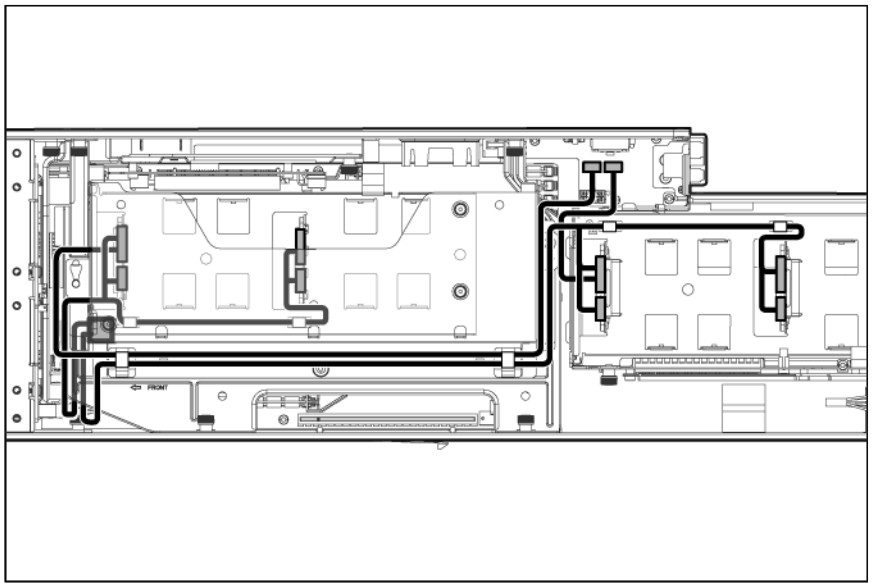

14. Install the front GPU bracket (on page 20).
15. Install the interposer board (on page 19).
16. Install the front GPU cage (on page 17).
17. Install the server into the chassis ("Installing the server into the chassis" on page 31).
18. Connect all peripheral cables to the server.
19. Power up the server.

Installing a quick-release drive

1. Power down the server (on page 16).
2. Remove the server from the chassis (on page 16).
3. Install a SFF quick-release drive cage ("Installing SFF quick-release drive cages" on page 46).
4. If installing a drive in the front GPU cage, remove the front GPU cage (on page 17).

5. Install the quick-release drive.

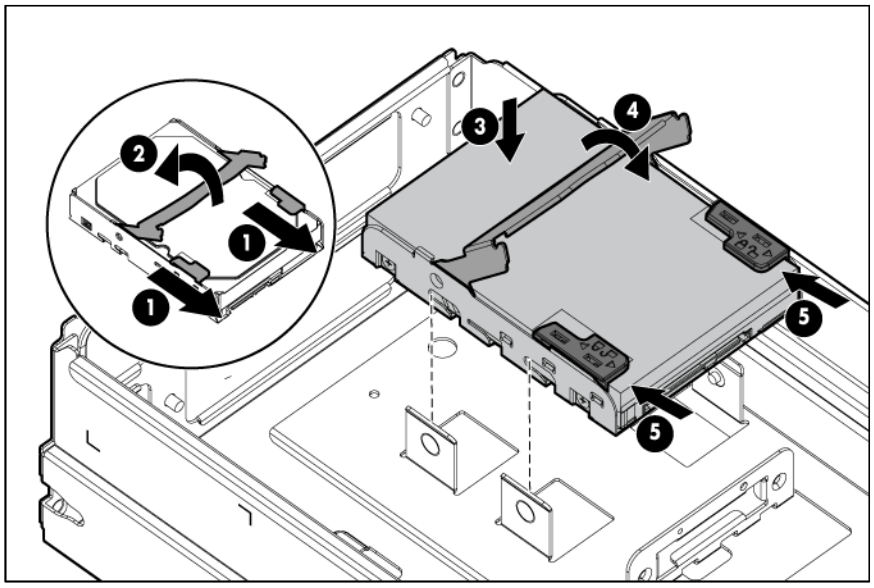

6. If removed, install the front GPU cage (on page 17).
7. Install the server into the chassis ("Installing the server into the chassis" on page 31).
8. Connect all peripheral cables to the server.
9. Power up the server.

Controller options

The server ships with HP Dynamic Smart Array B320i Controller. For more information about the controller and its features, see the *HP Dynamic Smart Array RAID Controller User Guide* on the HP website (http://www.hp.com/support/DSA_RAID_UG_en). To configure arrays, see the *Configuring Arrays on HP Smart Array Controllers Reference Guide* on the HP website (http://www.hp.com/support/CASAC_RG_en).

Upgrade options exist for the integrated array controller. For a list of supported options, see the QuickSpecs on the HP website (http://www.hp.com/go/qs).

The server supports FBWC. FBWC consists of a cache module and a capacitor pack. The DDR cache module buffers and stores data being written by the controller. When the system is powered on, the capacitor pack charges fully in about 5 minutes. In the event of a system power failure, a fully charged capacitor pack provides power for up to 80 seconds. During that interval, the controller transfers the cached data from DDR memory to flash memory, where the data remains indefinitely or until a controller retrieves the data.

△ **CAUTION:** The cache module connector does not use the industry-standard DDR3 mini-DIMMs. Do not use the controller with cache modules designed for other controller models, because the controller can malfunction and you can lose data. Also, do not transfer this cache module to an unsupported controller model, because you can lose data.

△ **CAUTION:** To prevent a server malfunction or damage to the equipment, do not add or remove the battery pack while an array capacity expansion, RAID level migration, or stripe size migration is in progress.

CAUTION: After the server is powered down, wait 15 seconds and then check the amber LED before unplugging the cable from the cache module. If the amber LED blinks after 15 seconds, do not remove the cable from the cache module. The cache module is backing up data, and data is lost if the cable is detached.

IMPORTANT: The battery pack might have a low charge when installed. In this case, a POST error message is displayed when the server is powered up, indicating that the battery pack is temporarily disabled. No action is necessary on your part. The internal circuitry automatically recharges the batteries and enables the battery pack. This process might take up to four hours. During this time, the cache module functions properly, but without the performance advantage of the battery pack.

NOTE: The data protection and the time limit also apply if a power outage occurs. When power is restored to the system, an initialization process writes the preserved data to the hard drives.

Installing the FBWC module and capacitor pack

CAUTION: In systems that use external data storage, be sure that the server is the first unit to be powered down and the last to be powered back up. Taking this precaution ensures that the system does not erroneously mark the drives as failed when the server is powered up.

1. Power down the server (on page 16).
2. Disconnect all peripheral cables from the server.
3. Remove the server from the chassis (on page 16).
4. Remove the SFF hot-plug drive cage ("Removing the SFF hot-plug drive cage" on page 22).
5. Remove the front GPU cage (on page 17).
6. Remove the interposer board (on page 18).
7. Remove the front GPU bracket (on page 19).
8. Remove the PCI riser cage (on page 23).
9. Connect the FBWC capacitor pack cable to the cache module.

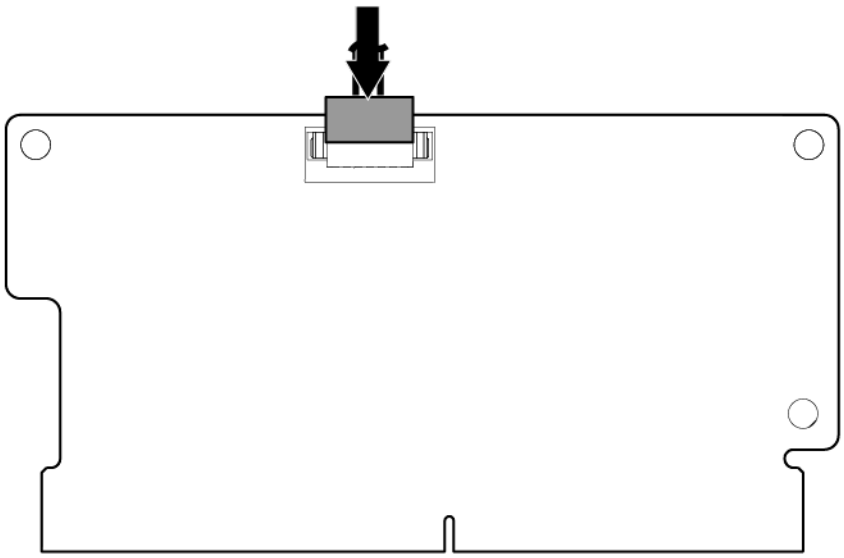

10. Do one of the following:
    - Install the cache module in the SAS cache module connector on the system board. For connector locations, see "System board components (on page 10)."

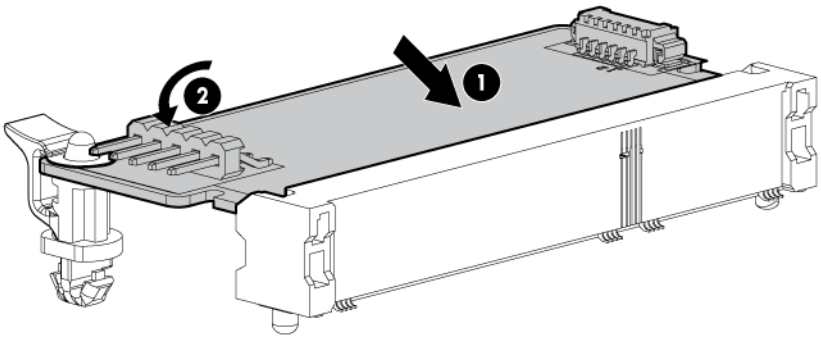

    - Install the cache module into the storage controller.

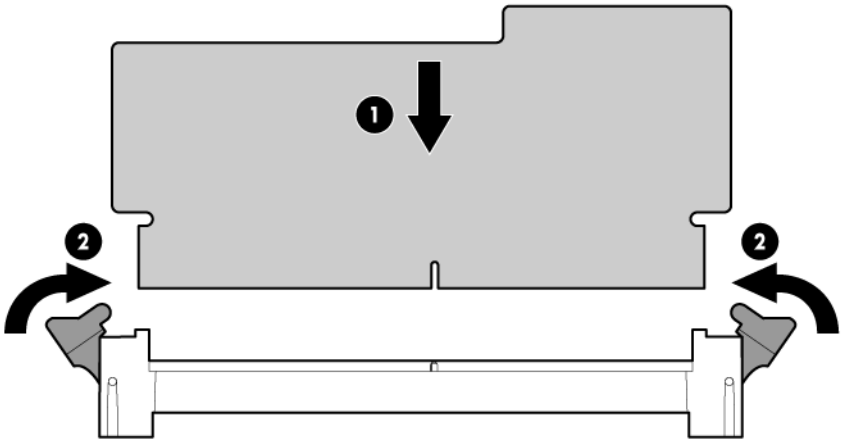

11. If using a storage controller, install the controller card into the PCI riser cage ("Installing an expansion board" on page 58).
12. Install the PCI riser cage (on page 24).
13. Route the FBWC capacitor pack cable as indicated:

- Left node

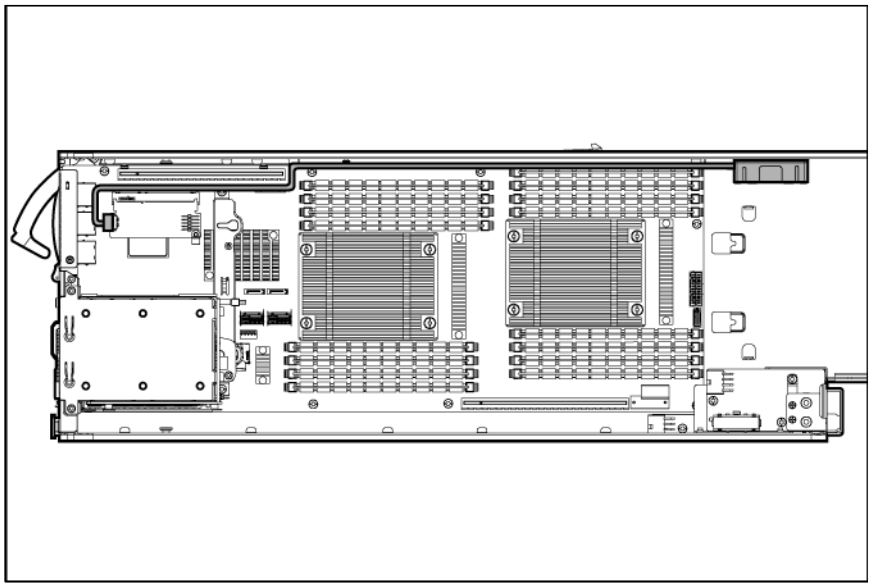

- Right node

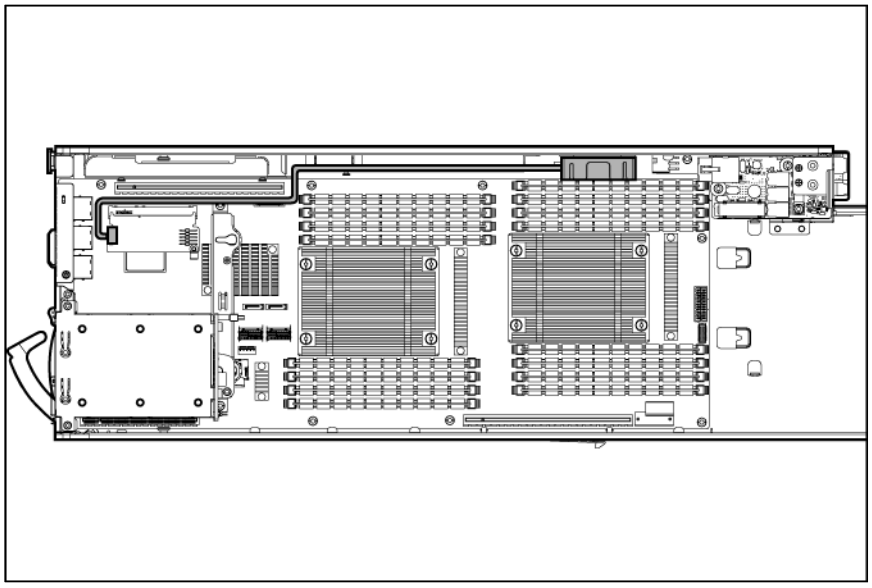

14. Install the FBWC capacitor pack into the holder mounted in the server tray.

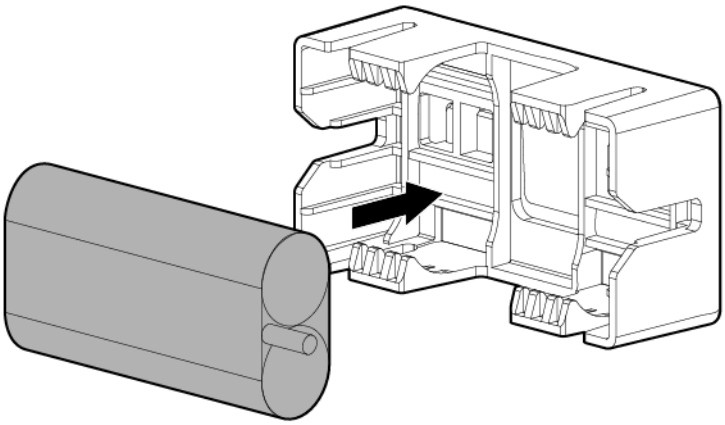

15. Install the front GPU bracket (on page 20).
16. Install the interposer board (on page 19).
17. Install the front GPU cage (on page 17).
18. Install the SFF hot-plug drive cage ("Installing the SFF hot-plug drive cage" on page 23).
19. Install the server into the chassis ("Installing the server into the chassis" on page 31).
20. Connect all peripheral cables to the server.
21. Power up the server.

Smart Array enablement Mini-SAS cable option

1. Power down the server (on page 16).
2. Disconnect all peripheral cables from the server.
3. Remove the server from the chassis (on page 16).
4. Remove the SFF hot-plug drive cage ("Removing the SFF hot-plug drive cage" on page 22).
5. Remove the front GPU cage (on page 17).
6. Remove the interposer board (on page 18).
7. Remove the front GPU bracket (on page 19).
8. Remove the PCI riser cage (on page 23).
9. Install the storage controller ("Installing an expansion board" on page 58).

10. Connect the Mini-SAS cable from the option kit to the storage controller.

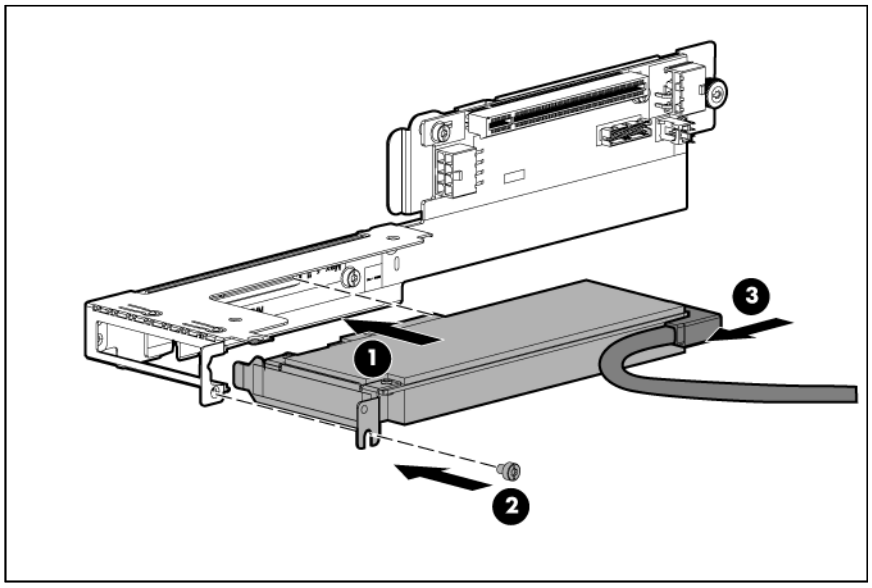

11. Install the PCI riser cage (on page 24).
12. Install the front GPU bracket (on page 20).
13. Install the interposer board (on page 19).
14. Install the front GPU cage (on page 17).
15. Install the SFF hot-plug drive cage ("Installing the SFF hot-plug drive cage" on page 23).
16. Disconnect the existing Mini-SAS cable from the drive cage.

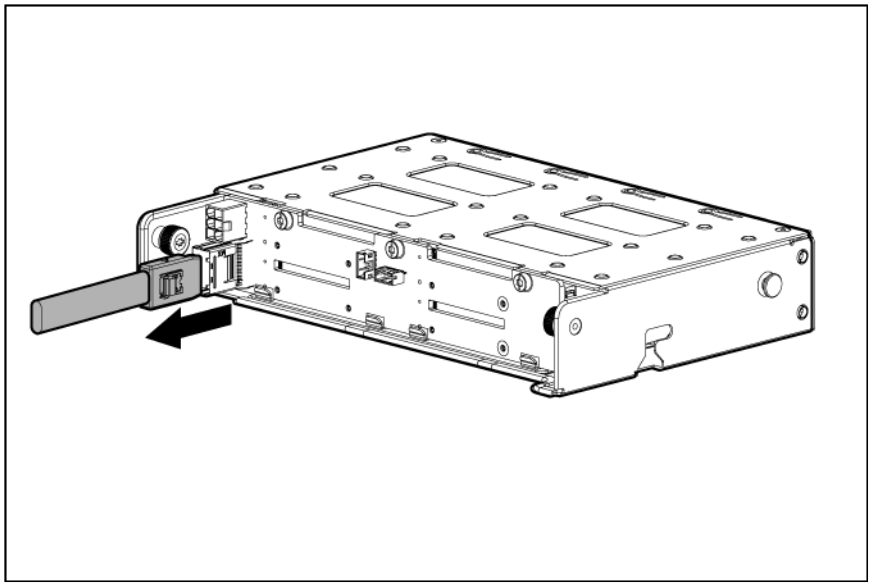

17. Route the Mini-SAS cable from the storage controller and connect it to the SFF hot-plug drive cage backplane. For more information see Mini-SAS cabling (on page 80).

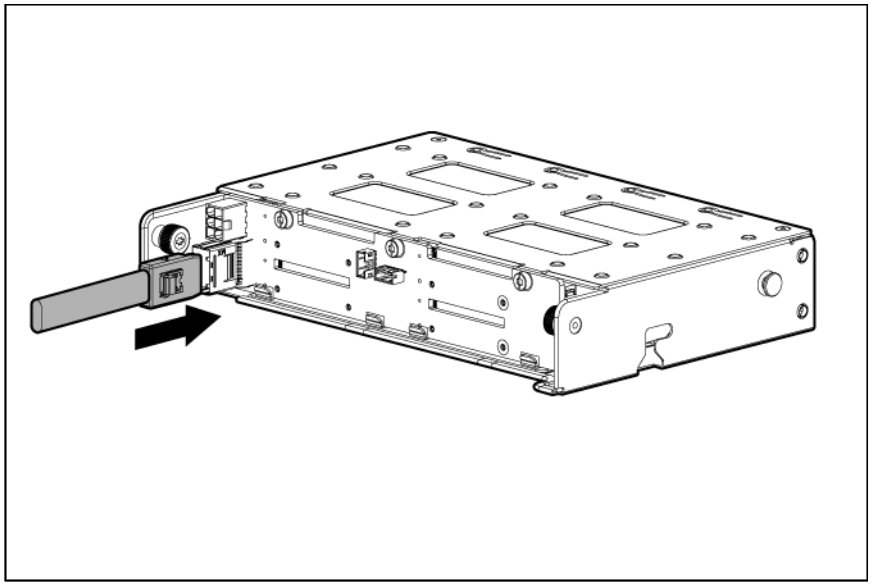

18. Install the server into the chassis ("Installing the server into the chassis" on page 31).
19. Connect all peripheral cables to the server.
20. Power up the server.

Expansion board options

Installing an expansion board

1. Power down the server (on page 16).
2. Remove the server from the chassis (on page 16).
3. Remove the SFF hot-plug drive cage ("Removing the SFF hot-plug drive cage" on page 22).
4. Remove the front GPU cage (on page 17).
5. Remove the interposer board (on page 18).
6. Remove the front GPU bracket (on page 19).
7. Remove the expansion slot cover from the PCI riser cage.
8. Remove the PCI riser cage (on page 23).

9. Install the expansion board into the slot until it seats firmly.

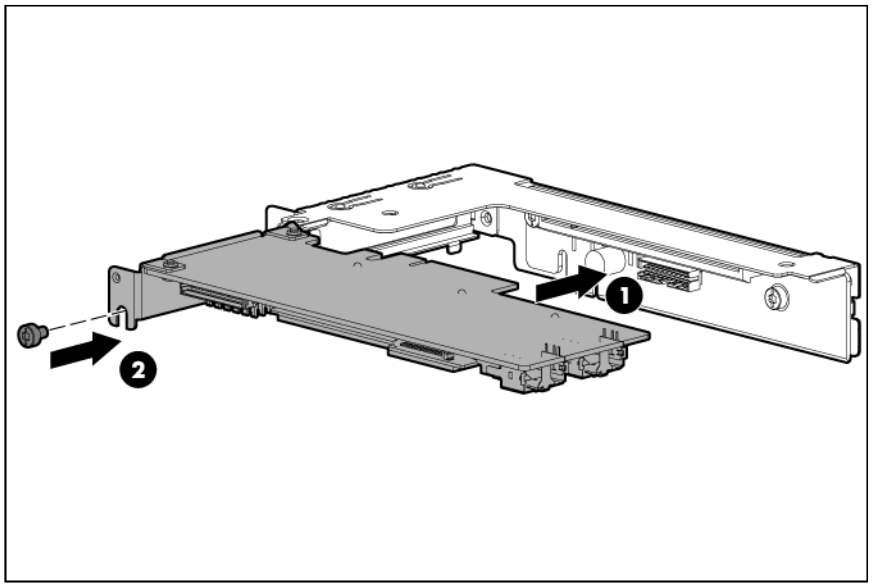

10. Install the PCI riser cage (on page 24).

IMPORTANT: The server does not power up if the PCI riser cage is not seated properly.

11. Connect any required internal cables to the expansion board. Refer to the documentation that ships with the expansion board.
12. Install the front GPU bracket (on page 20).
13. Install the interposer board (on page 19).
14. Install the front GPU cage (on page 17).
15. Install the SFF hot-plug drive cage ("Installing the SFF hot-plug drive cage" on page 23).
16. Install the server into the chassis ("Installing the server into the chassis" on page 31).
17. Connect any required external cables to the expansion board. Refer to the documentation that ships with the expansion board.
18. Power up the server.

GPU installation

Large BAR setting for GPU installation

The system maintenance switch position 9 controls the PCIe 64-bit BAR (large BAR) function.

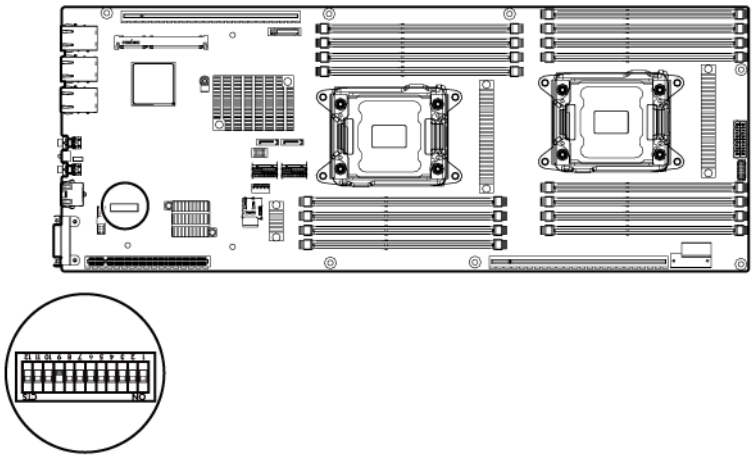

Before installing a GPU option, set the system maintenance switch position 9 to the setting indicated in the table below:

GPU model	Number of GPU supported	Switch position 9 setting
NVIDIA Tesla M2075, M2090, and M2070Q	1–3	Off = Disabled
NVIDIA Tesla K10, K20, K20X, and K40; NVIDIA GRID K2 and M40	1–3	On = Enabled

The minimum system requirement for the system board embedded HP Dynamic Smart Array B320i Controller to support large Bar function is version P75 2013. 09 .08.

GPU population rules

Observe the following population rules when installing a GPU in the server:

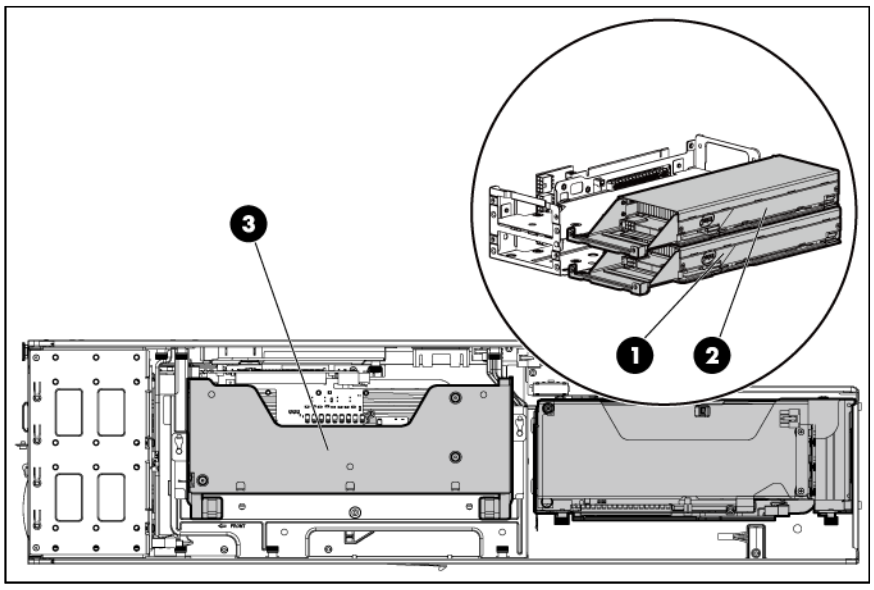

CAUTION: For proper cooling, be sure that all slots in the GPU cage are occupied by a GPU or a GPU blank.

Number of GPU	Rear GPU cage bottom bay (PCIe x16 slot 1 = GPU 1)	Rear GPU cage top bay (PCIe x16 slot 2 = GPU 2)	Front GPU cage (PCIe x16 slot 3 = GPU 3)
1	GPU blank	GPU blank	Yes
2	GPU blank	Yes	Yes
3	Yes	Yes	Yes

Installing GPU brackets

WARNING: To reduce the risk of personal injury from hot surfaces, allow the drives and the internal system components to cool before touching them.

1. Power down the server (on page 16).
2. Disconnect all peripheral cables from the server.
3. Remove the server from the chassis (on page 16).
4. To install GPU in front cage:
   a. Remove the front GPU cage (on page 17).

b. Remove the GPU blank from the cage.

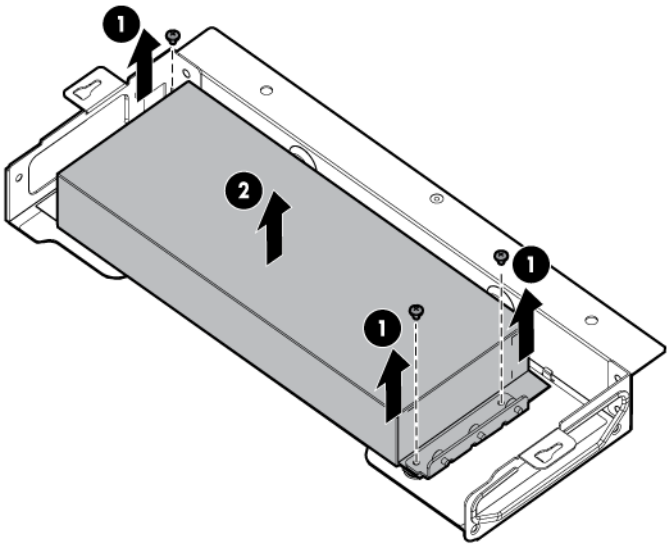

5. To install the GPU in the rear GPU cage:
   a. Remove the interposer board (on page 18).
   b. Remove the rear GPU cage.

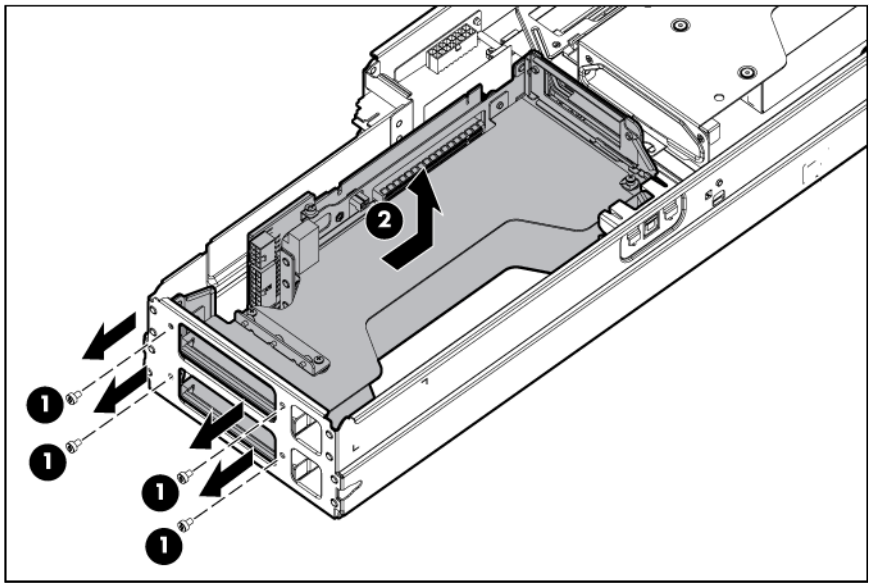

6. Remove the GPU cage standoffs:
   - When installing the Tesla K20/K20X/K40 and GRID M40 GPUs, remove the three standoffs.
   - When installing the Tesla K10 and GRID K2 GPUs, remove the two rear standoffs. Do not remove the single standoff on the front of the cage.

— Front GPU cage

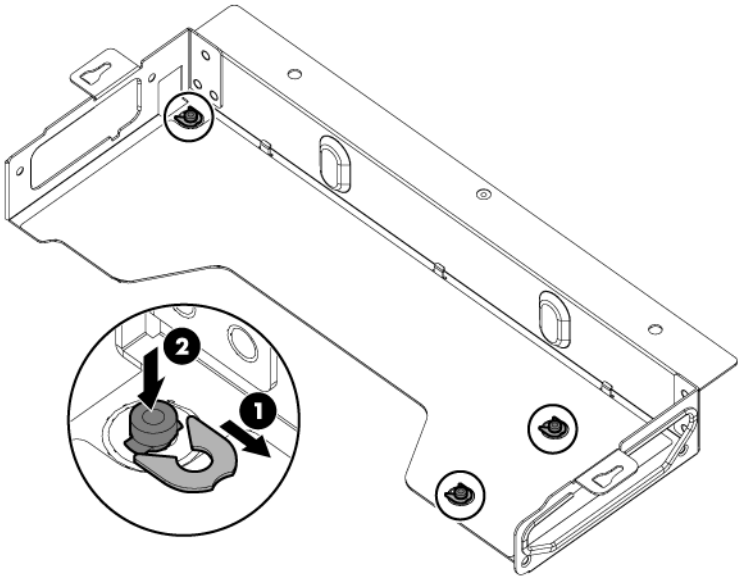

— Rear GPU cage

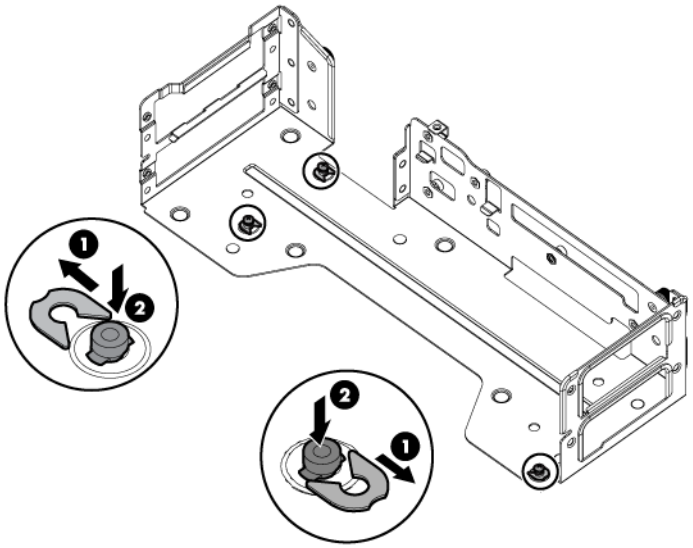

7. Remove the existing front I/O bracket from the GPU.
8. Install the brackets onto the GPU:
   - Front I/O bracket for Tesla K20/K20X/K40 and GRID M40

Use three M2.5 screws to attach this bracket to the Tesla K20/K20X/K40.

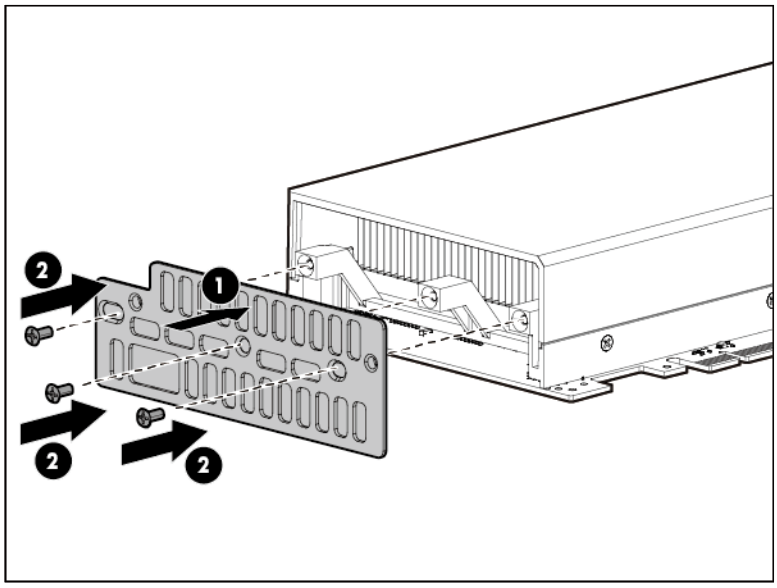

Use two M2.5 screws to attach this bracket to the GRID M40.

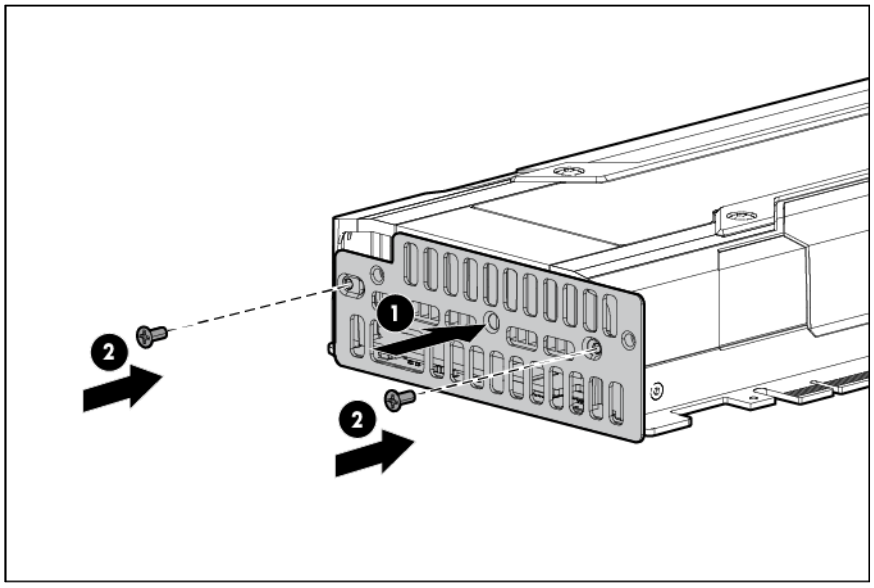

- Rear support bracket

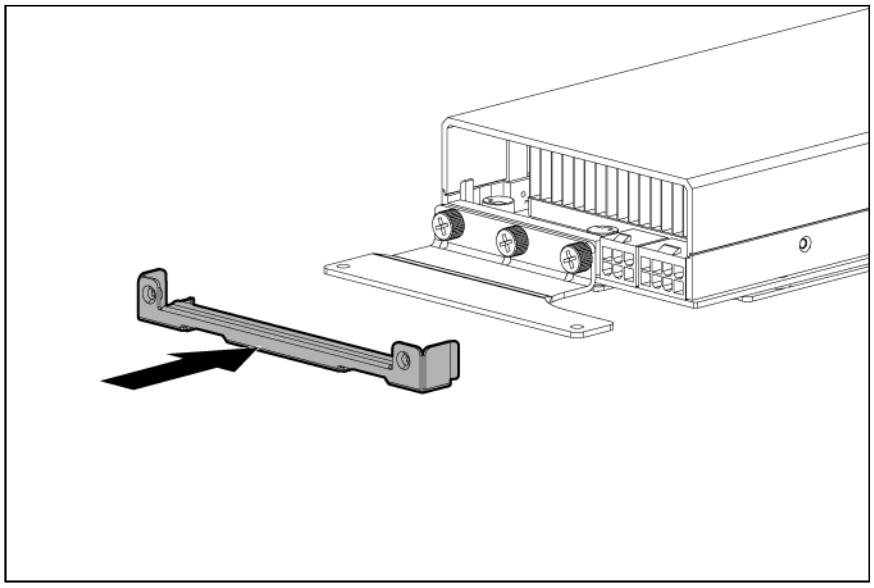

9. Connect the power and power capping cable to the GPU.

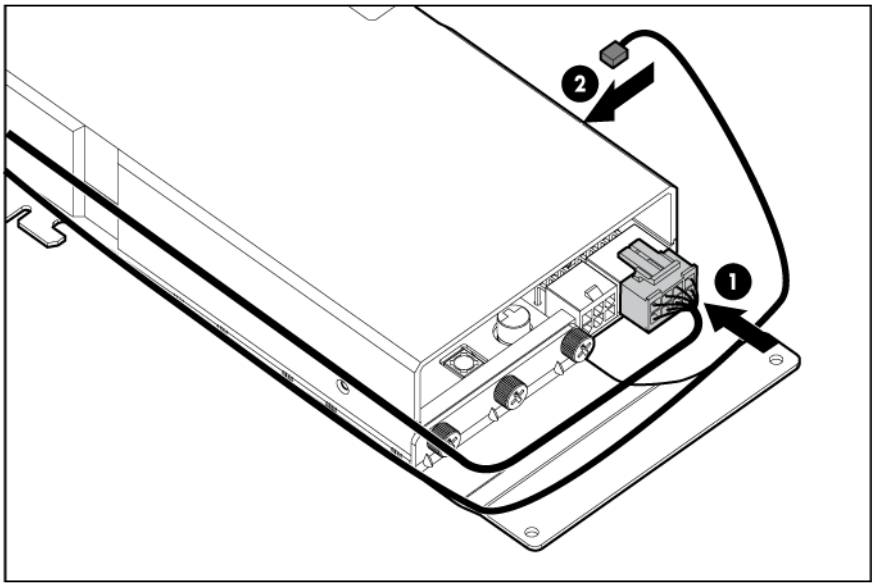

10. Install the GPU into the GPU cage, and then secure it with the T-10 screws:
    - Tesla K10 and GRID K2 GPUs

- Front GPU cage

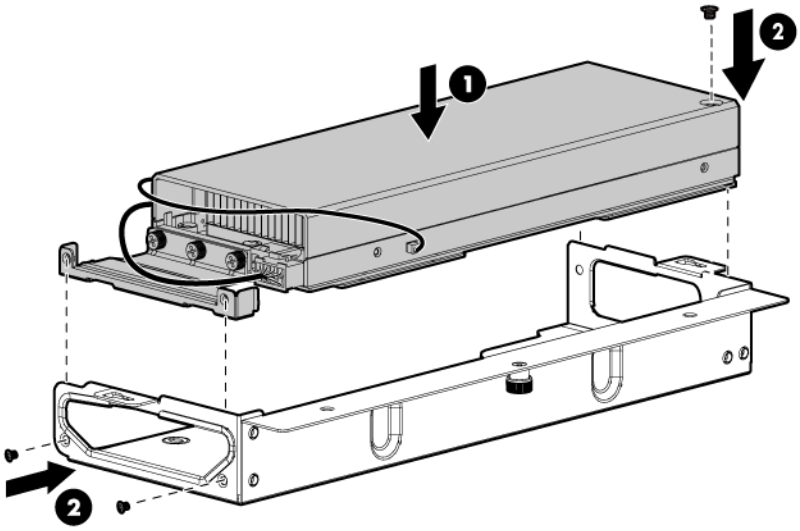

- Rear GPU cage

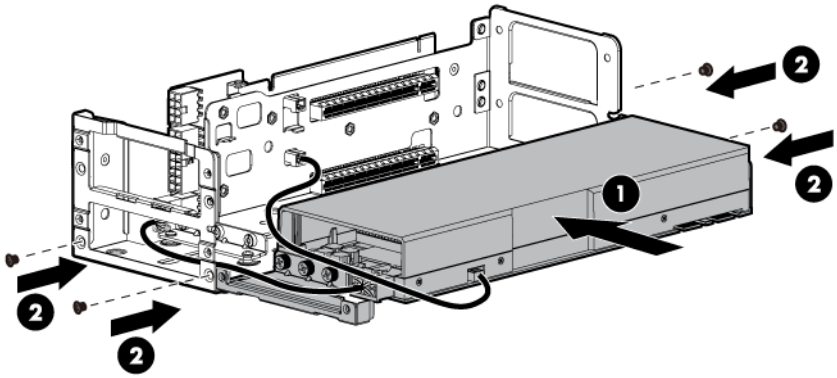

  - Tesla K20/K20X/K40 and GRID M40 GPUs

— Front GPU cage

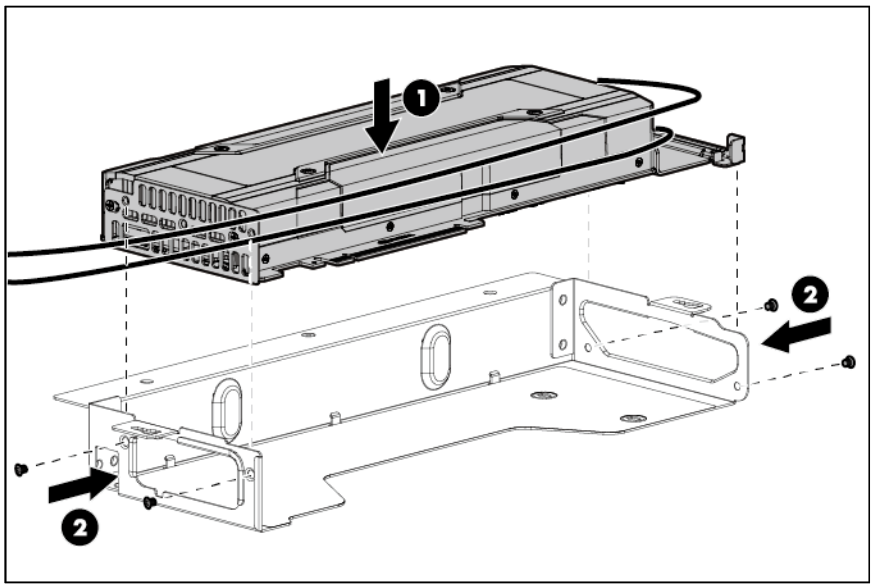

— Rear GPU cage

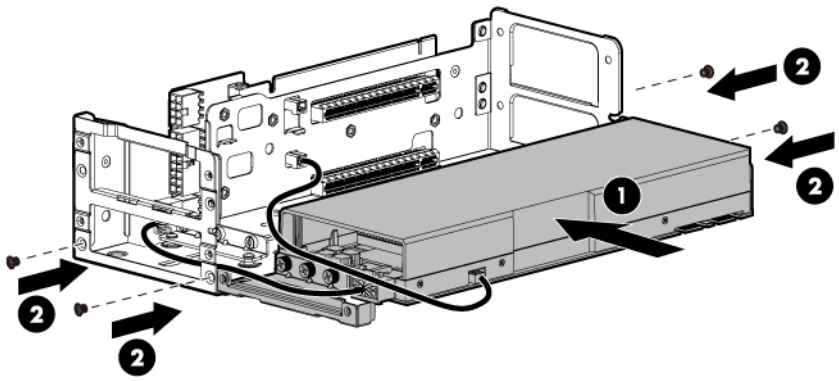

To install a secondary GPU in the rear cage:

a. Install the GPU cage divider plate included in the original server box.

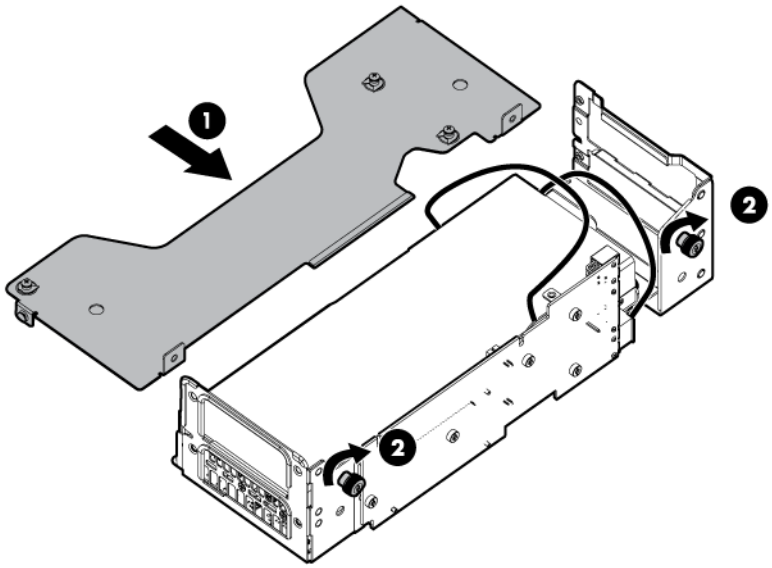

b. Install the secondary GPU:

— Tesla K10 and GRID K2 GPUs

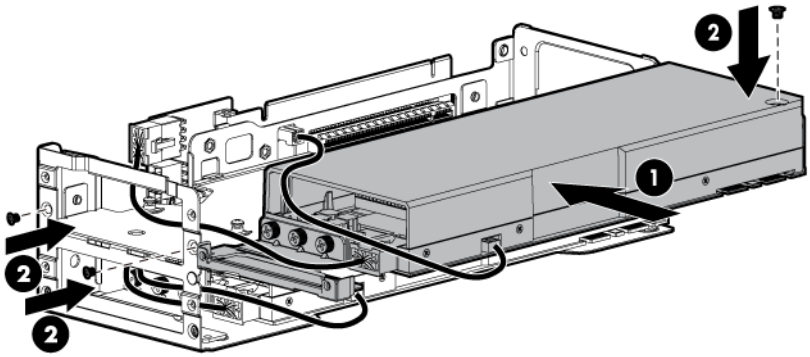

— Tesla K20/K20X/K40 and GRID M40 GPUs

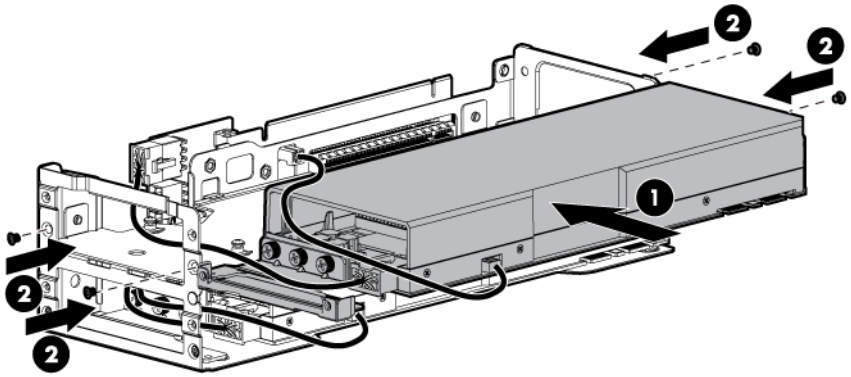

11. Install the GPU cage.
12. Install the interposer board (on page 19).
13. Install the front GPU cage (on page 17).
14. Install the server into the chassis ("Installing the server into the chassis" on page 31).
15. Connect all peripheral cables to the server.
16. Power up the server.

Connecting the SUV cable

CAUTION: Before disconnecting the SUV cable from the connector, always squeeze the release buttons on the sides of the connector. Failure to do so can result in damage to the equipment.

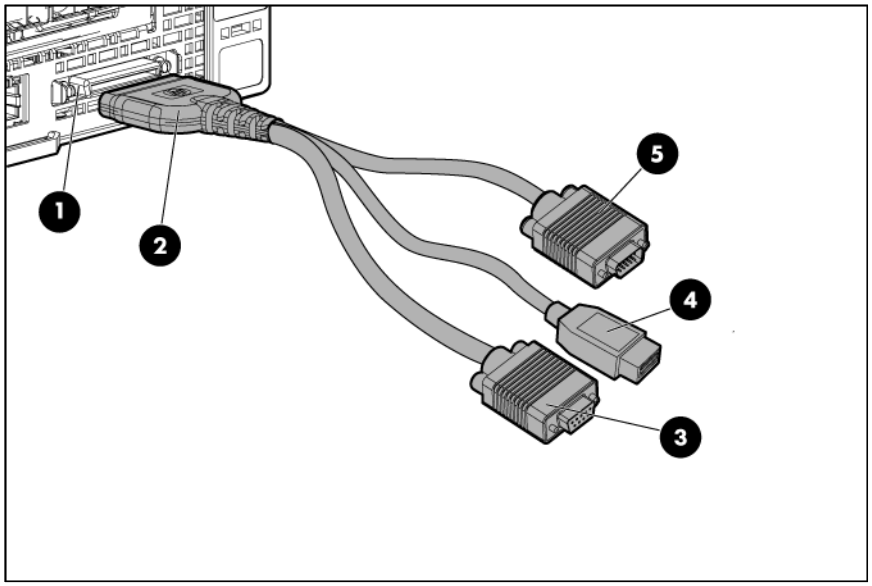

Item	Connector	Description
1	SUV port	SUV port on the server front panel
2	SUV connector	For connecting to the SUV connector on the server front panel
3	Video	For connecting a video monitor
4	USB	For connecting up to two USB devices
5	Serial	For trained personnel to connect a null modem serial cable and perform advanced diagnostic procedures

Redundant hot-plug power supply option

CAUTION: All power supplies installed in the server must have the same output power capacity. Verify that all power supplies have the same part number and label color. The system becomes unstable and may shut down when it detects mismatched power supplies.

Label color	Output
Orange	750 W
Green	1,200 W
White	1,200 W -48Vdc
Yellow	1,500 W

CAUTION: To prevent improper cooling and thermal damage, do not operate the server unless all bays are populated with either a component or a blank.

To install the component:

1. Unfasten the cable management solution to access the power supply bays.
2. Remove the power supply blank.

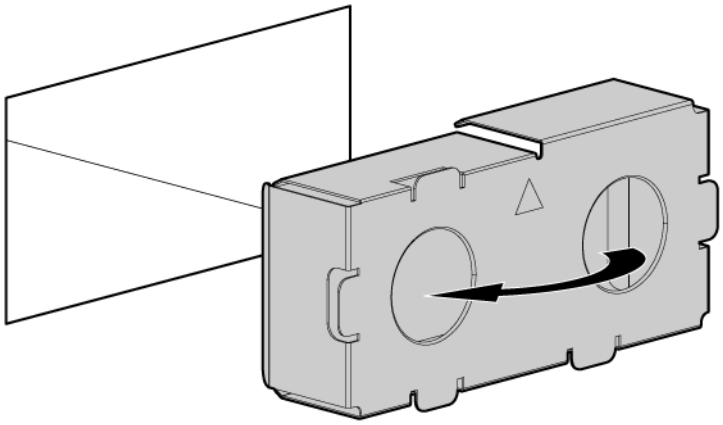

3. Remove the protective cover from the connector pins on the power supply.

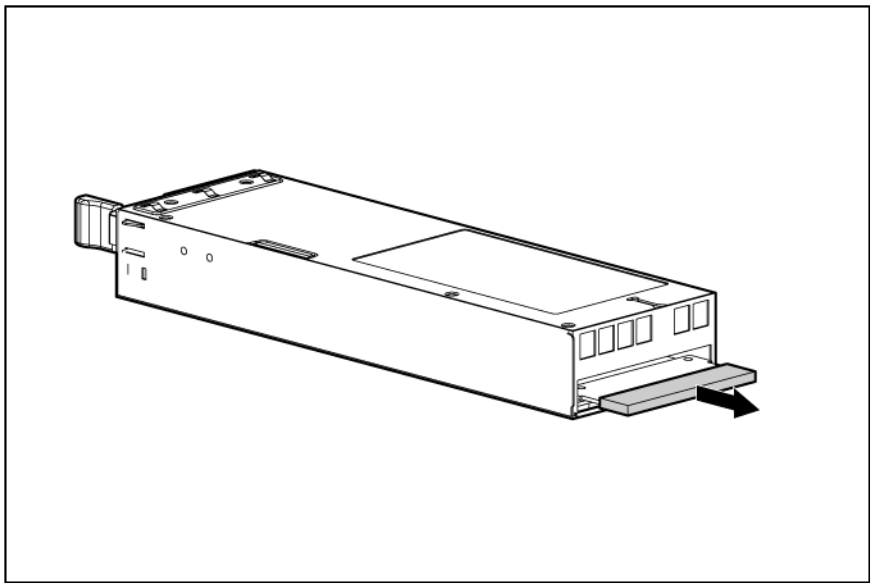

WARNING: To reduce the risk of electric shock or damage to the equipment, do not connect the power cord to the power supply until the power supply is installed.

4. Install the redundant power supply into the bay until it clicks.

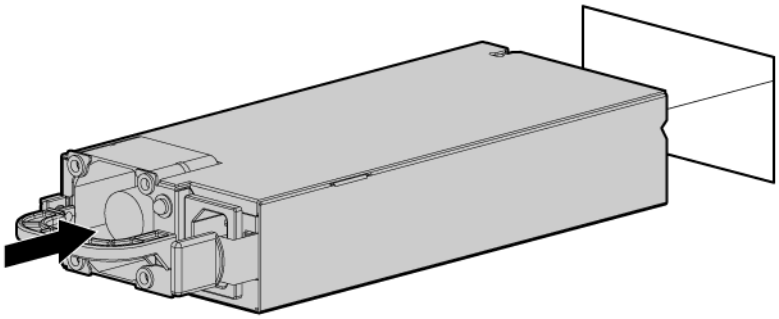

5. Connect the power cord to the power supply.
6. Use the strain relief clip from the server hardware kit to secure the power cord.

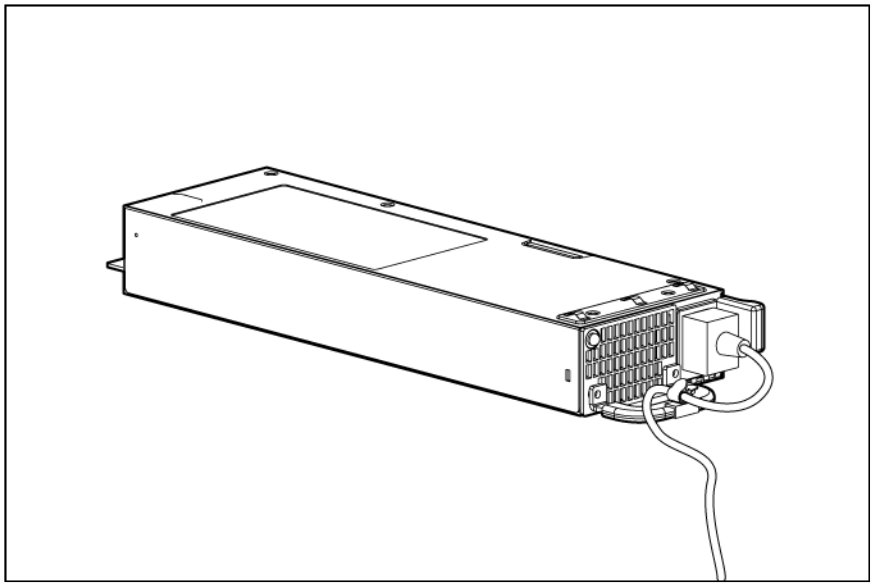

7. Route the power cord through the cable management solution.
8. Connect the power cord to the power source.
9. Be sure that the power supply LED is green.

HP Trusted Platform Module option

For more information about product features, specifications, options, configurations, and compatibility, see the product QuickSpecs on the HP website (http://www.hp.com/go/qs).

Use these instructions to install and enable a TPM on a supported server. This procedure includes three sections:

1. Installing the Trusted Platform Module board (on page 72).
2. Retaining the recovery key/password (on page 74).

3. Enabling the Trusted Platform Module (on page 74).

   Enabling the TPM requires accessing RBSU. For more information about RBSU, see the HP website (http://www.hp.com/support/rbsu).

TPM installation requires the use of drive encryption technology, such as the Microsoft Windows BitLocker Drive Encryption feature. For more information on BitLocker, see the Microsoft website (http://www.microsoft.com).

> **CAUTION:** Always observe the guidelines in this document. Failure to follow these guidelines can cause hardware damage or halt data access.

When installing or replacing a TPM, observe the following guidelines:

- Do not remove an installed TPM. Once installed, the TPM becomes a permanent part of the system board.
- When installing or replacing hardware, HP service providers cannot enable the TPM or the encryption technology. For security reasons, only the customer can enable these features.
- When returning a system board for service replacement, do not remove the TPM from the system board. When requested, HP Service provides a TPM with the spare system board.
- Any attempt to remove an installed TPM from the system board breaks or disfigures the TPM security rivet. Upon locating a broken or disfigured rivet on an installed TPM, administrators should consider the system compromised and take appropriate measures to ensure the integrity of the system data.
- When using BitLocker, always retain the recovery key/password. The recovery key/password is required to enter Recovery Mode after BitLocker detects a possible compromise of system integrity.
- HP is not liable for blocked data access caused by improper TPM use. For operating instructions, see the encryption technology feature documentation provided by the operating system.

Installing the Trusted Platform Module board

> **WARNING:** To reduce the risk of personal injury, electric shock, or damage to the equipment, remove the power cord to remove power from the server. The front panel Power On/Standby button does not completely shut off system power. Portions of the power supply and some internal circuitry remain active until AC power is removed.

> **WARNING:** To reduce the risk of personal injury from hot surfaces, allow the drives and the internal system components to cool before touching them.

1. Power down the server (on page 16).
2. Extend the server from the rack.
3. Remove the front GPU cage (on page 17).
4. Remove the interposer board (on page 18).
5. Remove the front GPU bracket (on page 19).
6. Remove the SFF hot-plug drive cage ("Removing the SFF hot-plug drive cage" on page 22).
7. Remove the FlexibleLOM riser cage (on page 25).

CAUTION: Any attempt to remove an installed TPM from the system board breaks or disfigures the TPM security rivet. Upon locating a broken or disfigured rivet on an installed TPM, administrators should consider the system compromised and take appropriate measures to ensure the integrity of the system data.

8. Install the TPM board. Press down on the connector to seat the board ("System board components" on page 10).

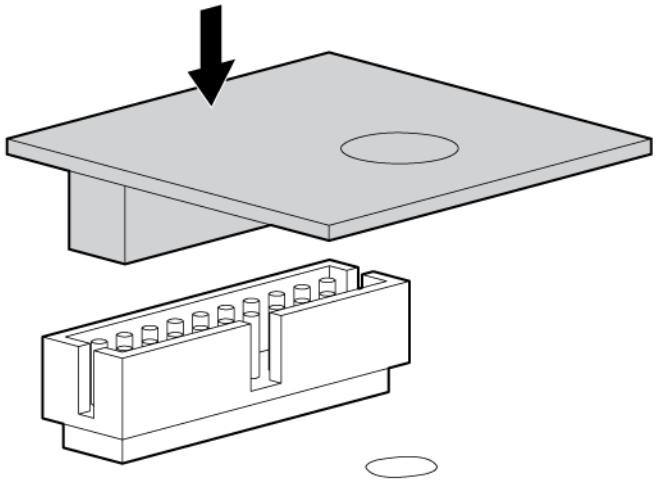

9. Install the TPM security rivet by pressing the rivet firmly into the system board.

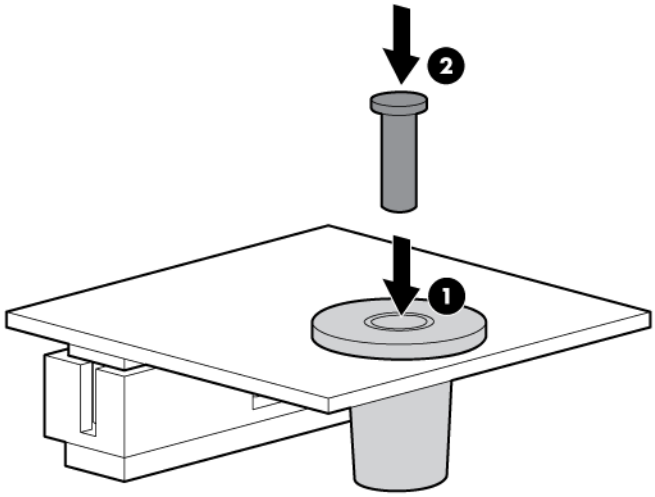

10. Install the FlexibleLOM riser cage (on page 25).
11. Install the SFF hot-plug drive cage ("Installing the SFF hot-plug drive cage" on page 23).
12. Install the front GPU bracket (on page 20).
13. Install the interposer board (on page 19).
14. Install the front GPU cage (on page 17).
15. Slide the server into the rack.
16. Power up the server.

Retaining the recovery key/password

The recovery key/password is generated during BitLocker setup, and can be saved and printed after BitLocker is enabled. When using BitLocker, always retain the recovery key/password. The recovery key/password is required to enter Recovery Mode after BitLocker detects a possible compromise of system integrity.

To help ensure maximum security, observe the following guidelines when retaining the recovery key/password:

- Always store the recovery key/password in multiple locations.
- Always store copies of the recovery key/password away from the server.
- Do not save the recovery key/password on the encrypted hard drive.

Enabling the Trusted Platform Module

1. When prompted during the start-up sequence, access RBSU by pressing the **F9** key.
2. From the Main Menu, select **Server Security**.
3. From the Server Security Menu, select **Trusted Platform Module**.
4. From the Trusted Platform Module Menu, select **TPM Functionality**.
5. Select **Enable**, and then press the **Enter** key to modify the TPM Functionality setting.
6. Press the **Esc** key to exit the current menu, or press the **F10** key to exit RBSU.
7. Reboot the server.
8. Enable the TPM in the OS. For OS-specific instructions, see the OS documentation.

> △ **CAUTION:** When a TPM is installed and enabled on the server, data access is locked if you fail to follow the proper procedures for updating the system or option firmware, replacing the system board, replacing a hard drive, or modifying OS application TPM settings.

For more information on firmware updates and hardware procedures, see the *HP Trusted Platform Module Best Practices White Paper* on the HP website (http://www.hp.com/support).

For more information on adjusting TPM usage in BitLocker™, see the Microsoft website (http://technet.microsoft.com/en-us/library/cc732774.aspx).

Cabling

Cabling overview

This section provides guidelines that help you make informed decisions about cabling the server and hardware options to optimize performance.

For information on cabling peripheral components, refer to the white paper on high-density deployment at the HP website (http://www.hp.com/products/servers/platforms).

CAUTION: When routing cables, always be sure that the cables are not in a position where they can be pinched or crimped.

Power cabling

System board power cabling

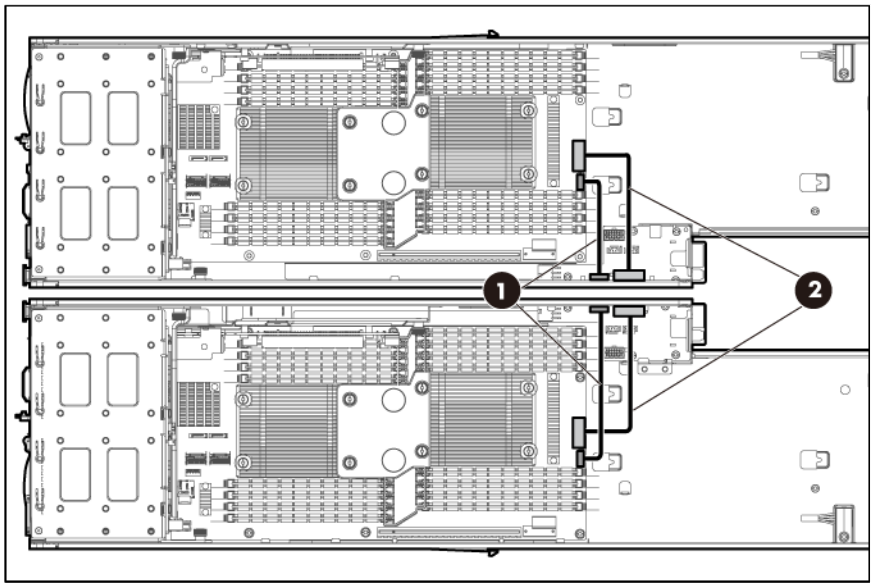

Item	Description
1	RPS cable
2	System board power cable

SFF hot-plug drive cage

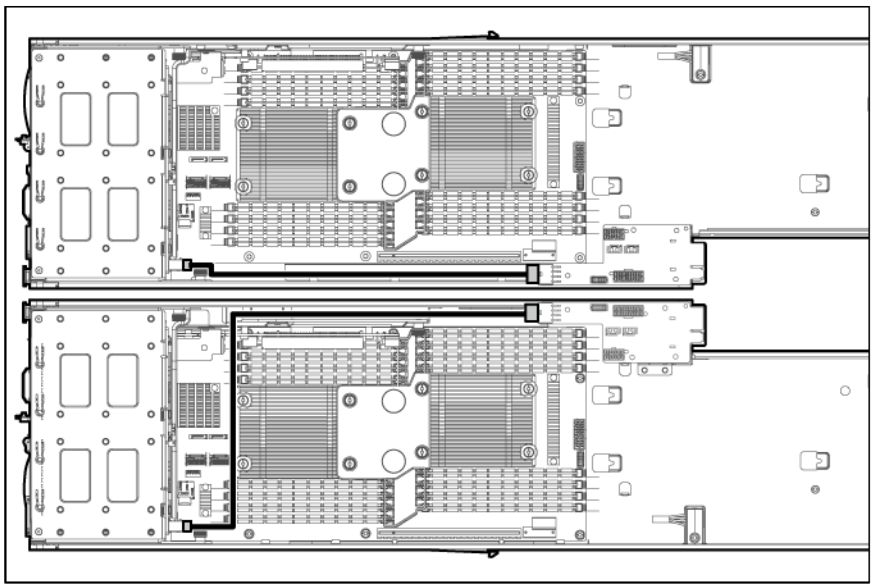

Front quick-release cage

- Left node

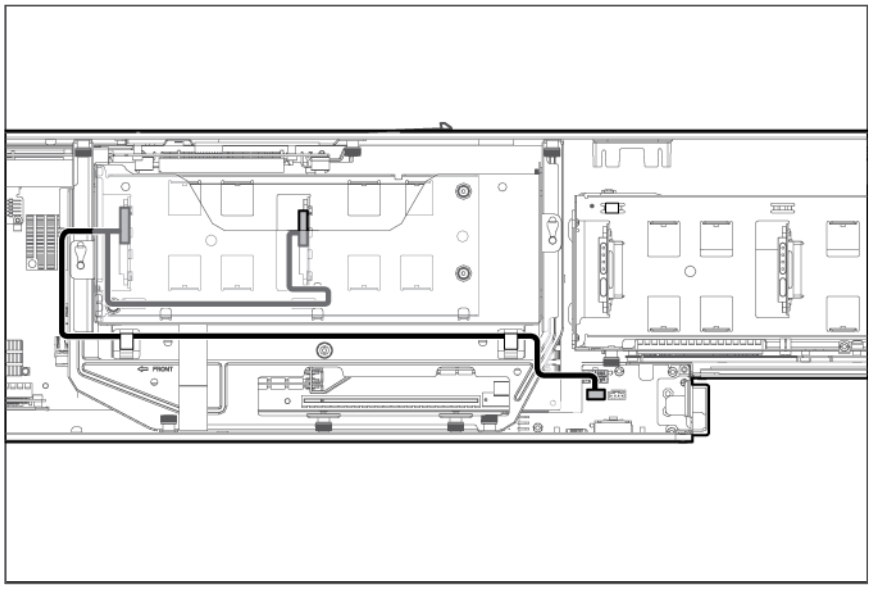

- Right node

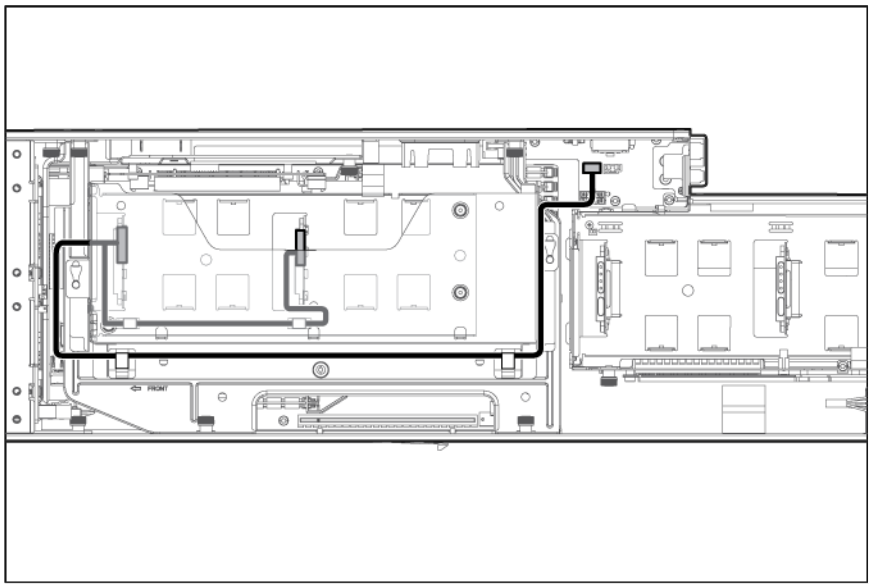

Rear quick-release drive cage

- Left node

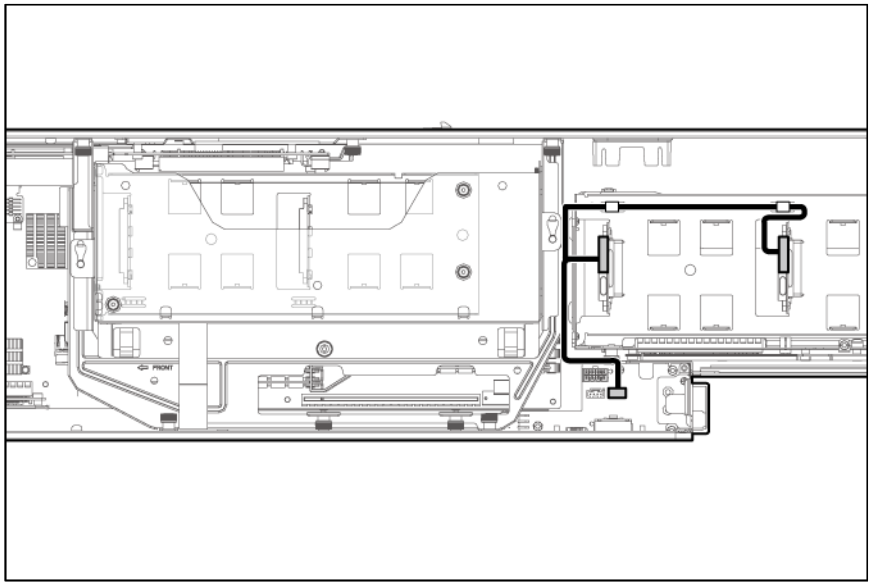

- Right node

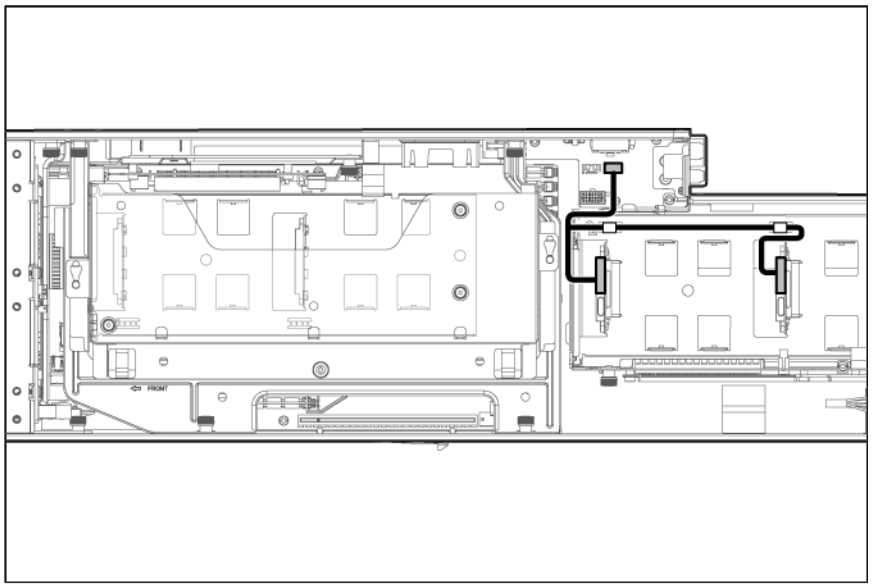

Front GPU

- Left node

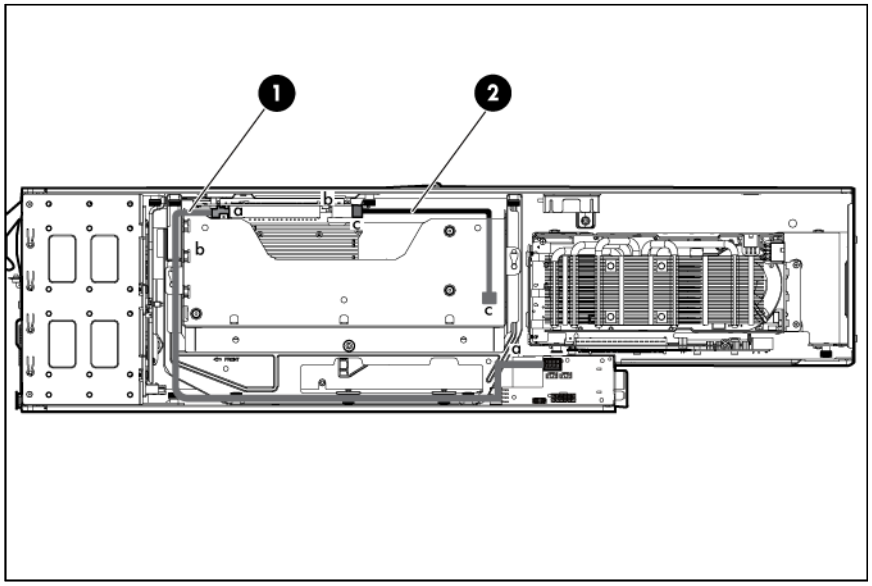

Item	Description
1	Front GPU riser board to L2 power board
2	Front GPU to front GPU riser board

- Right node

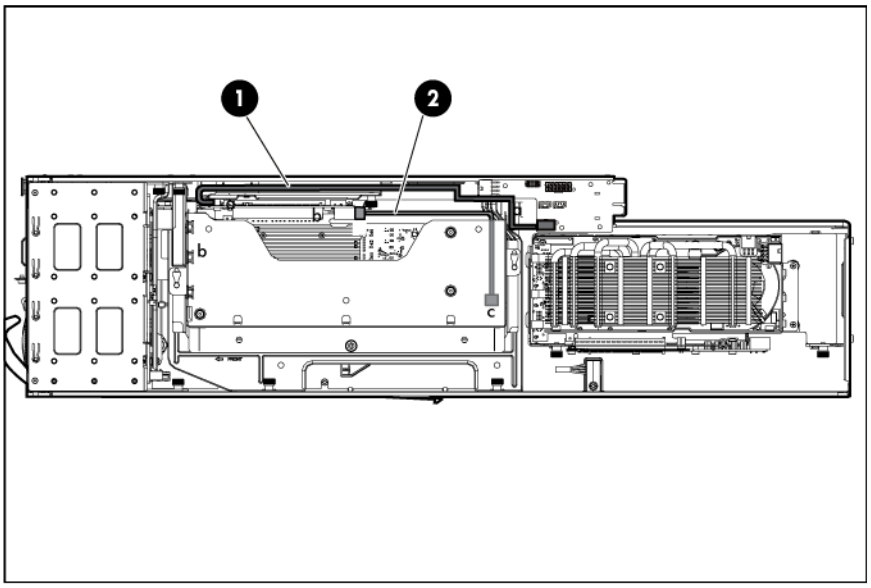

Item	Description
1	Front GPU riser board to L2 power board
2	Front GPU to front GPU riser board

Rear GPU

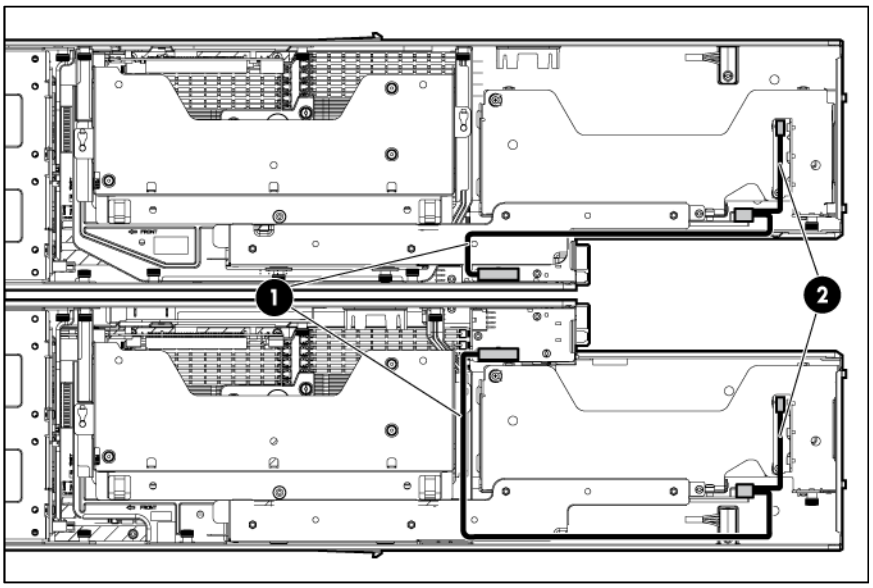

Item	Description
1	Rear GPU riser board to L2 power board
2	Rear GPU to rear GPU riser board

Mini-SAS cabling

SFF hot-plug drive cage

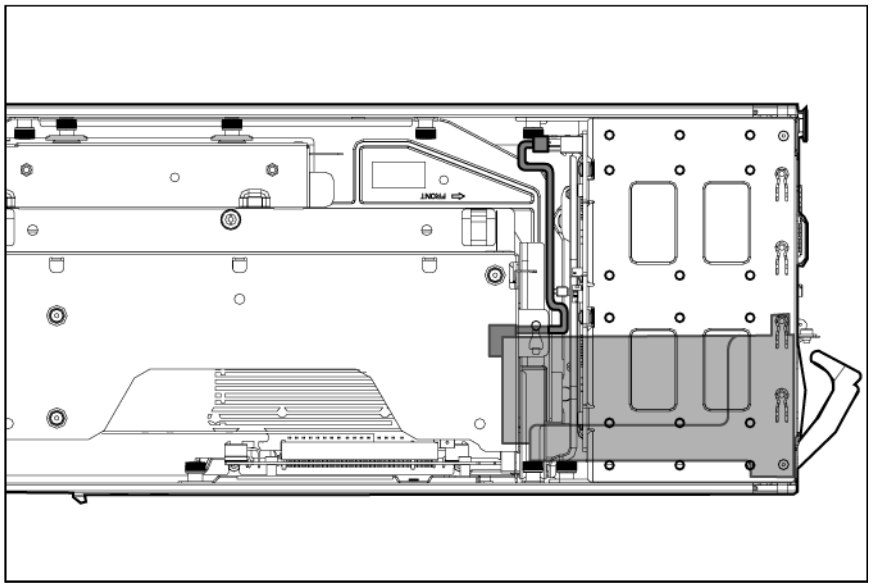

Front quick-release drive cage

- Left node

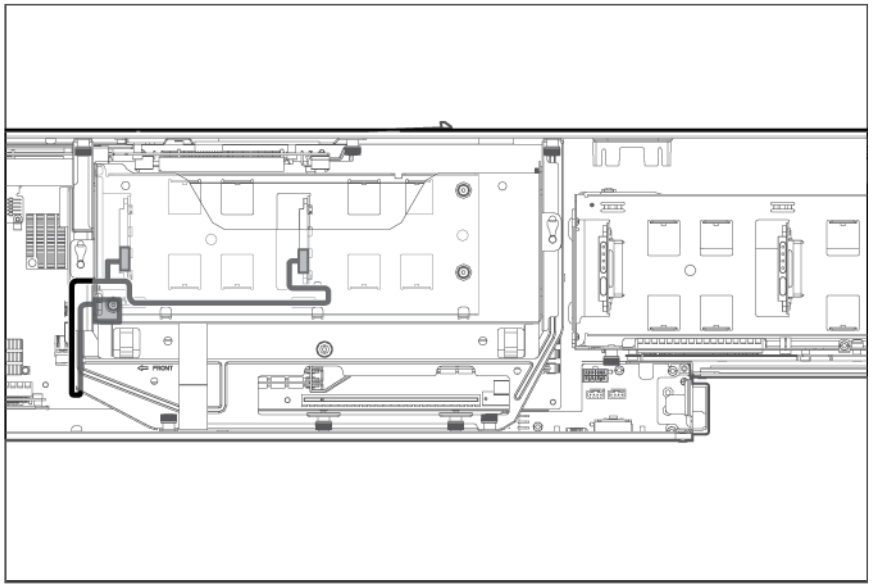

- Right node

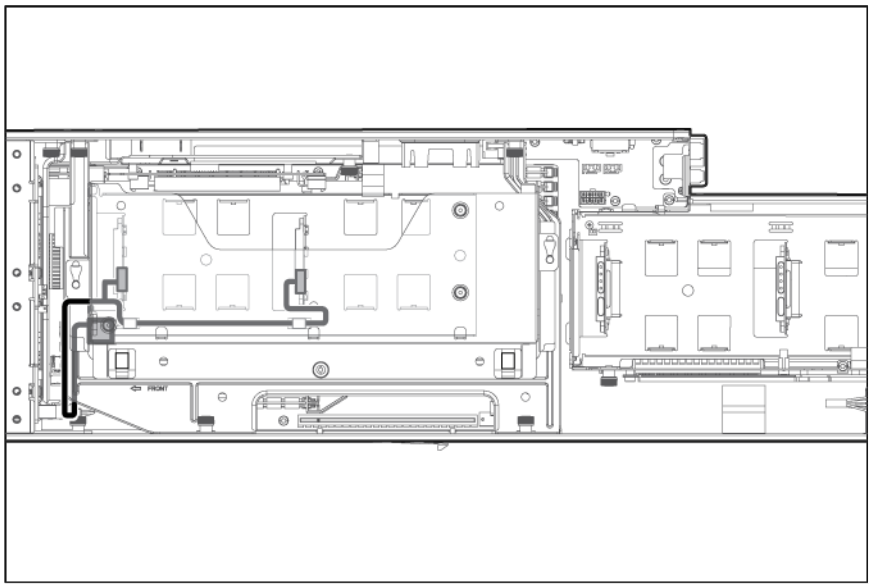

Rear quick-release drive cage

- Left node

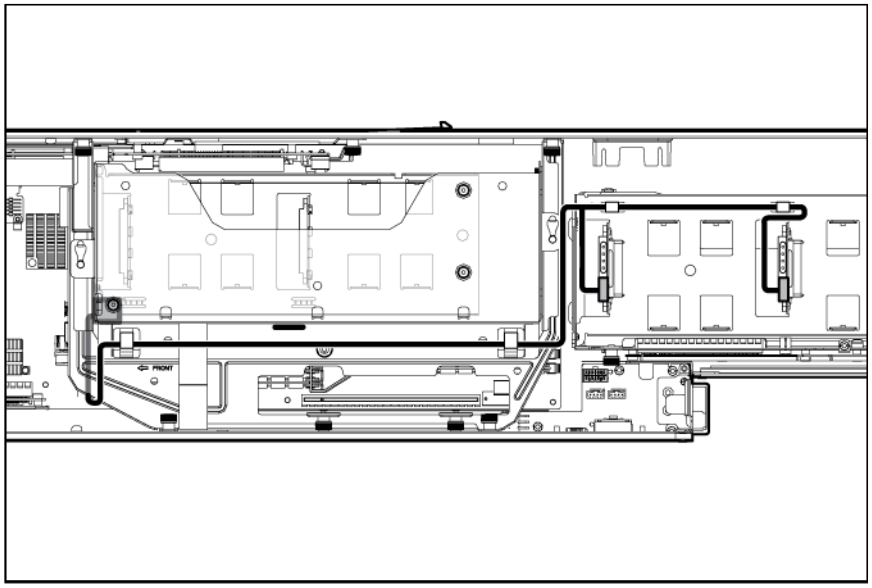

- Right node

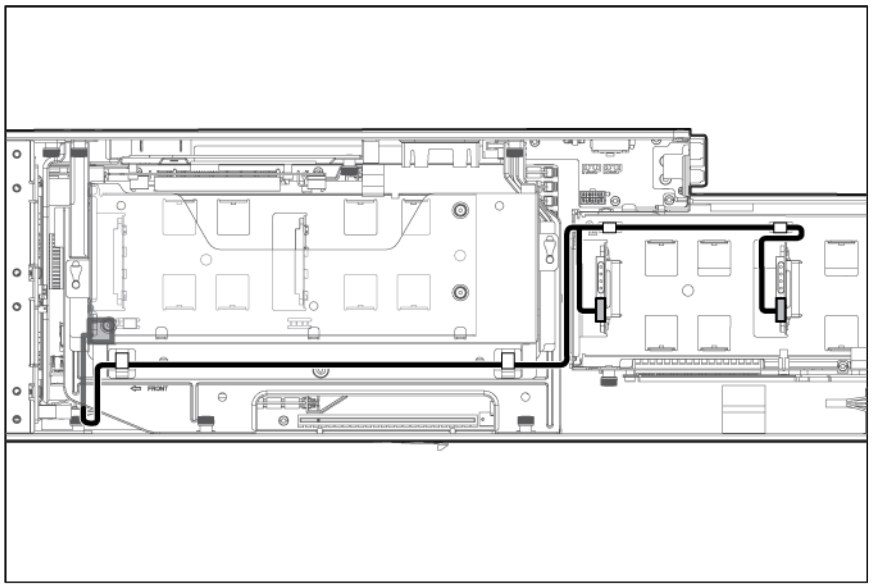

FBWC capacitor pack cabling

- Left node

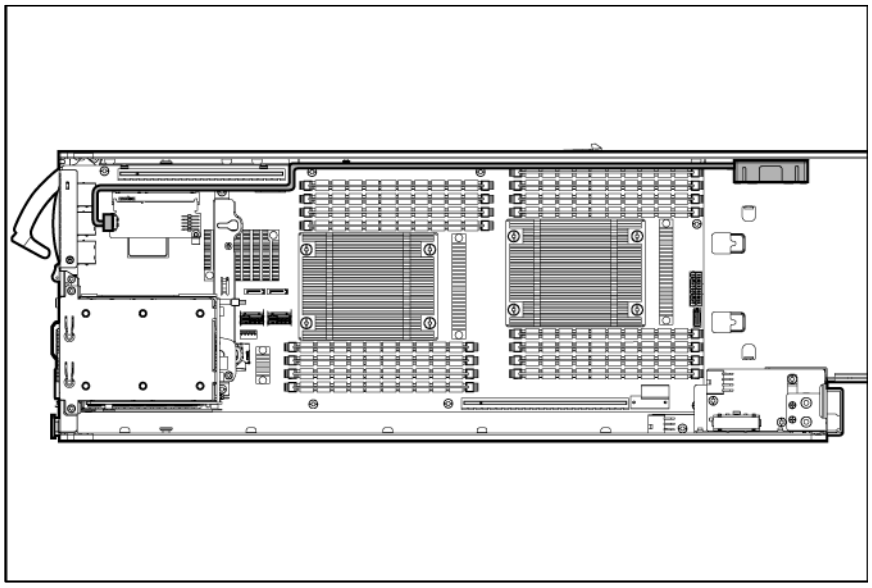

- Right node

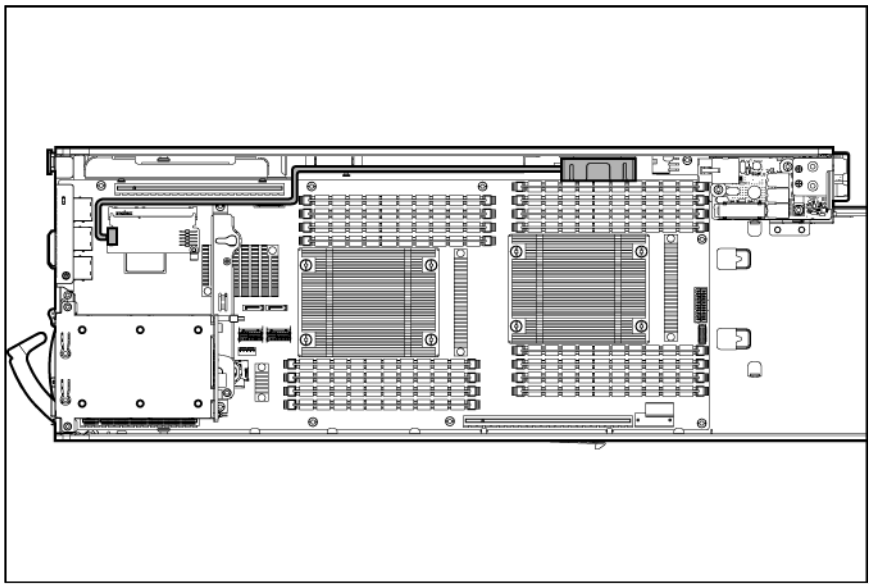

Software and configuration utilities

Server mode

The software and configuration utilities presented in this section operate in online mode, offline mode, or in both modes.

Software or configuration utility	Server mode
HP iLO (on page 84)	Online and Offline
Active Health System (on page 85)	Online and Offline
Integrated Management Log (on page 86)	Online and Offline
Intelligent Provisioning (on page 87)	Offline
HP Insight Diagnostics (on page 88)	Online and Offline
HP Insight Remote Support software (on page 86)	Online
HP Insight Online (on page 87)	Online
Erase Utility (on page 88)	Offline
Scripting Toolkit ("Scripting Toolkit for Windows and Linux" on page 87)	Online
HP Service Pack for ProLiant (on page 89)	Online and Offline
HP Smart Update Manager (on page 89)	Online and Offline
HP ROM-Based Setup Utility (on page 89)	Offline
Array Configuration Utility (on page 92)	Online and Offline
Option ROM Configuration for Arrays (on page 93)	Offline
ROMPaq utility (on page 93)	Offline

Product QuickSpecs

For more information about product features, specifications, options, configurations, and compatibility, see the product QuickSpecs on the HP website (http://www.hp.com/go/qs).

HP iLO

The iLO 4 subsystem is a standard component of HP ProLiant servers that simplifies initial server setup, server health monitoring, power and thermal optimization, and remote server administration. The iLO 4 subsystem includes an intelligent microprocessor, secure memory, and a dedicated network interface. This design makes iLO 4 independent of the host server and its operating system.

iLO 4 enables and manages the Active Health System (on page 85) and also features Agentless Management. All key internal subsystems are monitored by iLO 4. If enabled, SNMP alerts are sent directly by iLO 4 regardless of the host operating system or even if no host operating system is installed.

Embedded remote support software is available on HP ProLiant Gen8 and later servers with iLO 4, regardless of the operating system software and without installing OS agents on the server.

Using iLO 4, you can do the following:

- Access a high-performance and secure Integrated Remote Console to the server from anywhere in the world if you have a network connection to the server.
- Use the shared .NET Integrated Remote Console to collaborate with up to four server administrators.
- Remotely mount high-performance Virtual Media devices to the server.
- Securely and remotely control the power state of the managed server.
- Implement true Agentless Management with SNMP alerts from HP iLO, regardless of the state of the host server.
- Download the Active Health System log.
- Register for HP Insight Remote Support.
- Use iLO Federation to manage multiple servers from one system running the iLO web interface.
- Use Virtual Power and Virtual Media from the GUI, the CLI, or the iLO scripting toolkit for many tasks, including the automation of deployment and provisioning.
- Control iLO by using a remote management tool.

For more information about iLO 4 features, see the iLO 4 documentation on the HP website (http://www.hp.com/go/ilo/docs).

Active Health System

HP Active Health System provides the following features:

- Combined diagnostics tools/scanners
- Always on, continuous monitoring for increased stability and shorter downtimes
- Rich configuration history
- Health and service alerts
- Easy export and upload to Service and Support

The HP Active Health System monitors and records changes in the server hardware and system configuration. The Active Health System assists in diagnosing problems and delivering rapid resolution if server failures occur.

The Active Health System collects the following types of data:

- Server model
- Serial number
- Processor model and speed
- Storage capacity and speed
- Memory capacity and speed
- Firmware/BIOS

HP Active Health System does not collect information about Active Health System users' operations, finances, customers, employees, partners, or data center, such as IP addresses, host names, user names, and passwords. HP Active Health System does not parse or change operating system data from third-party error event log activities, such as content created or passed through by the operating system.

The data that is collected is managed according to the HP Data Privacy policy. For more information see the HP website (http://www.hp.com/go/privacy).

The Active Health System, in conjunction with the system monitoring provided by Agentless Management or SNMP Pass-thru, provides continuous monitoring of hardware and configuration changes, system status, and service alerts for various server components.

The Agentless Management Service is available in the SPP, which can be downloaded from the HP website (http://www.hp.com/go/spp/download). The Active Health System log can be downloaded manually from iLO 4 or HP Intelligent Provisioning and sent to HP.

For more information, see the following documents:

- *HP iLO User Guide* on the HP website (http://www.hp.com/go/ilo/docs)
- *HP Intelligent Provisioning User Guide* on the HP website (http://www.hp.com/go/intelligentprovisioning/docs)

Integrated Management Log

The IML records hundreds of events and stores them in an easy-to-view form. The IML timestamps each event with 1-minute granularity.

You can view recorded events in the IML in several ways, including the following:

- From within operating system-specific IML viewers:
  - For Windows: IML Viewer
  - For Linux: IML Viewer Application
- From within the iLO 4 web interface

HP Insight Remote Support software

HP strongly recommends that you register your device for remote support to enable enhanced delivery of your HP Warranty, HP Care Pack Service, or HP contractual support agreement. HP Insight Remote Support supplements your monitoring continuously to ensure maximum system availability by providing intelligent event diagnosis, and automatic, secure submission of hardware event notifications to HP, which will initiate a fast and accurate resolution, based on your product's service level. Notifications may be sent to your authorized HP Channel Partner for onsite service, if configured and available in your country.

For more information, see *HP Insight Remote Support and Insight Online Setup Guide for ProLiant Gen8 Servers and BladeSystem c-Class Enclosures* on the HP website (http://www.hp.com/go/enterprise/docs). HP Insight Remote Support is available as part of HP Warranty, HP Care Pack Service, or HP contractual support agreement.

HP Insight Remote Support central connect

When you use the embedded Remote Support functionality with an HP ProLiant Gen8 server or HP BladeSystem c-Class enclosure, you can register a server or chassis to communicate to HP through an HP Insight Remote Support centralized Hosting Device in your local environment. All configuration and service event information is routed through the Hosting Device. This information can be viewed by using the local HP Insight RS Console or the web-based view in HP Insight Online (if enabled in Insight RS).

The central connect configuration is available in iLO 4 1.10 and later, Intelligent Provisioning 1.20 and later, and Onboard Administrator 3.60 and later.

For more information about the prerequisites, supported hardware, and associated operating systems for central connect, see *HP Insight Remote Support Release Notes* on the HP website (http://www.hp.com/go/insightremotesupport/docs).

HP Insight Online direct connect

When you use the embedded Remote Support functionality with an HP ProLiant Gen8 server or HP BladeSystem c-Class enclosure, you can register a server or chassis to communicate directly to HP Insight Online without the need to set up an HP Insight Remote Support centralized Hosting Device in your local environment. HP Insight Online will be your primary interface for remote support information. The direct connect configuration is available in iLO 4 1.40 and later, Intelligent Provisioning 1.60 and later, and Onboard Administrator 4.12 and later.

For more information, see the product documentation on the HP website (http://www.hp.com/go/insightremotesupport/docs).

HP Insight Online

HP Insight Online is a capability of the HP Support Center portal. Combined with HP Insight Remote Support central connect or HP Insight Online direct connect, it automatically aggregates device health, asset, and support information with contract and warranty information, and then secures it in a single, personalized dashboard that is viewable from anywhere at any time. The dashboard organizes your IT and service data to help you understand and respond to that information more quickly. With specific authorization from you, an authorized HP Channel Partner can also view your IT environment remotely using HP Insight Online.

For more information about using HP Insight Online, see the *HP Insight Online User's Guide* on the HP website (http://www.hp.com/go/insightremotesupport/docs).

Scripting Toolkit for Windows and Linux

The Scripting Toolkit for Windows and Linux is a server deployment product that delivers an unattended automated installation for high-volume server deployments. The Scripting Toolkit is designed to support ProLiant BL, ML, DL, and SL servers. The toolkit includes a modular set of utilities and important documentation that describes how to apply these tools to build an automated server deployment process.

The Scripting Toolkit provides a flexible way to create standard server configuration scripts. These scripts are used to automate many of the manual steps in the server configuration process. This automated server configuration process cuts time from each deployment, making it possible to scale rapid, high-volume server deployments.

For more information, and to download the Scripting Toolkit, see the HP website (http://www.hp.com/go/ProLiant/STK).

Intelligent Provisioning

Several packaging changes have taken place with HP ProLiant Gen8 servers: SmartStart CDs and the Smart Update Firmware DVD no longer ship with these new servers. Instead, the deployment capability is embedded in the server as part of Intelligent Provisioning.

Intelligent Provisioning is a single-server deployment tool embedded in HP ProLiant Gen8 and later servers that simplifies HP ProLiant server setup, providing a reliable and consistent way to deploy HP ProLiant server configurations:

- Intelligent Provisioning assists with the OS installation process by preparing the system for installing "off-the-shelf" and HP branded versions of operating system software and integrating optimized HP ProLiant server support software.
- Intelligent Provisioning provides maintenance-related tasks using the Perform Maintenance window.
- Intelligent Provisioning provides installation help for Microsoft Windows, Red Hat and SUSE Linux, and VMware operating systems. For specific OS support, see the *HP Intelligent Provisioning Release Notes* on the HP website (http://www.hp.com/go/intelligentprovisioning/docs).

For more information about Intelligent Provisioning software, see the HP website (http://www.hp.com/go/intelligentprovisioning). For Intelligent Provisioning recovery media downloads, see the Resources tab on the HP website (http://www.hp.com/go/ilo). For consolidated drive and firmware update packages, see the HP Smart Update: Server Firmware and Driver Updates page on the HP website (http://www.hp.com/go/SmartUpdate).

HP Insight Diagnostics

HP Insight Diagnostics is a proactive server management tool, available in both offline and online versions, that provides diagnostics and troubleshooting capabilities to assist IT administrators who verify server installations, troubleshoot problems, and perform repair validation.

HP Insight Diagnostics Offline Edition performs various in-depth system and component testing while the OS is not running. To run this utility, boot the server using Intelligent Provisioning (on page 87).

HP Insight Diagnostics Online Edition is a web-based application that captures system configuration and other related data needed for effective server management. Available in Microsoft Windows and Linux versions, the utility helps to ensure proper system operation.

For more information or to download the utility, see the HP website (http://www.hp.com/servers/diags). HP Insight Diagnostics Online Edition is also available in the SPP ("HP Service Pack for ProLiant" on page 89).

HP Insight Diagnostics survey functionality

HP Insight Diagnostics (on page 88) provides survey functionality that gathers critical hardware and software information on ProLiant servers.

This functionality supports operating systems that are supported by the server. For operating systems supported by the server, see the HP website (http://www.hp.com/go/supportos).

If a significant change occurs between data-gathering intervals, the survey function marks the previous information and overwrites the survey data files to reflect the latest changes in the configuration.

Survey functionality is installed with every Intelligent Provisioning-assisted HP Insight Diagnostics installation, or it can be installed through the SPP ("HP Service Pack for ProLiant" on page 89).

Erase Utility

△ **CAUTION:** Perform a backup before running the Erase Utility. The utility sets the system to its original factory state, deletes the current hardware configuration information, including array setup and disk partitioning, and erases all connected hard drives completely. Before using this utility, see the instructions in the *HP Intelligent Provisioning User Guide*.

Use the Erase Utility to erase drives and Active Health System logs, and to reset RBSU settings. Run the Erase Utility if you must erase the system for the following reasons:

- You want to install a new operating system on a server with an existing operating system.
- You encounter an error when completing the steps of a factory-installed operating system installation.

To access the Erase Utility, click the Perform Maintenance icon from the Intelligent Provisioning home screen, and then select **Erase**.

For more information about the Erase Utility, see the *HP Intelligent Provisioning User Guide* on the HP website (http://www.hp.com/go/intelligentprovisioning/docs).

HP Service Pack for ProLiant

SPP is a comprehensive systems software (drivers and firmware) solution delivered as a single package with major server releases. This solution uses HP SUM as the deployment tool and is tested on all supported HP ProLiant servers including HP ProLiant Gen8 and later servers.

SPP can be used in an online mode on a Windows or Linux hosted operating system, or in an offline mode where the server is booted to an operating system included on the ISO file so that the server can be updated automatically with no user interaction or updated in interactive mode.

For more information or to download SPP, see one of the following pages on the HP website:

- HP Service Pack for ProLiant download page (http://www.hp.com/go/spp)
- HP Smart Update: Server Firmware and Driver Updates page (http://www.hp.com/go/SmartUpdate)

HP Smart Update Manager

HP SUM is a product used to install and update firmware, drivers, and systems software on HP ProLiant servers. HP SUM provides a GUI and a command-line scriptable interface for deployment of systems software for single or one-to-many HP ProLiant servers and network-based targets, such as iLOs, OAs, and VC Ethernet and Fibre Channel modules.

For more information about HP SUM, see the product page on the HP website (http://www.hp.com/go/hpsum).

To download HP SUM, see the HP website (http://www.hp.com/go/hpsum/download).

To access the *HP Smart Update Manager User Guide*, see the HP SUM Information Library (http://www.hp.com/go/hpsum/documentation).

HP ROM-Based Setup Utility

RBSU is a configuration utility embedded in HP ProLiant servers that performs a wide range of configuration activities that can include the following:

- Configuring system devices and installed options
- Enabling and disabling system features
- Displaying system information
- Selecting the primary boot controller
- Configuring memory options
- Language selection

For more information on RBSU, see the *HP ROM-Based Setup Utility User Guide* on the HP RBSU Information Library (http://www.hp.com/go/rbsu/docs).

Using RBSU

To use RBSU, use the following keys:

- To access RBSU, press the **F9** key during power-up when prompted.
- To navigate the menu system, use the arrow keys.
- To make selections, press the **Enter** key.
- To access Help for a highlighted configuration option, press the **F1** key.

IMPORTANT: RBSU automatically saves settings when you press the **Enter** key. The utility does not prompt you for confirmation of settings before you exit the utility. To change a selected setting, you must select a different setting and press the **Enter** key.

Default configuration settings are applied to the server at one of the following times:

- Upon the first system power-up
- After defaults have been restored

Default configuration settings are sufficient for proper typical server operation, but configuration settings can be modified using RBSU. The system will prompt you for access to RBSU with each power-up.

Auto-configuration process

The auto-configuration process automatically runs when you boot the server for the first time. During the power-up sequence, the system ROM automatically configures the entire system without needing any intervention. During this process, the ORCA utility, in most cases, automatically configures the array to a default setting based on the number of drives connected to the server.

NOTE: If the boot drive is not empty or has been written to in the past, ORCA does not automatically configure the array. You must run ORCA to configure the array settings.

NOTE: The server may not support all the following examples.

Drives installed	Drives used	RAID level
1	1	RAID 0
2	2	RAID 1
3, 4, 5, or 6	3, 4, 5, or 6	RAID 5
More than 6	0	None

To change any ORCA default settings and override the auto-configuration process, press the **F8** key when prompted.

For more information on RBSU, see the *HP ROM-Based Setup Utility User Guide* on the HP RBSU Information Library (http://www.hp.com/go/rbsu/docs).

Boot options

Near the end of the boot process, the boot options screen is displayed. This screen is visible for several seconds before the system attempts to boot from a supported boot device. During this time, you can do the following:

- Access RBSU by pressing the **F9** key.
- Access Intelligent Provisioning Maintenance Menu by pressing the **F10** key.
- Access the boot menu by pressing the **F11** key.
- Force a PXE Network boot by pressing the **F12** key.

Configuring AMP modes

Not all HP ProLiant servers support all AMP modes. RBSU provides menu options only for the modes supported by the server. Advanced memory protection within RBSU enables the following advanced memory modes:

- Advanced ECC Mode—Provides memory protection beyond Standard ECC. All single-bit failures and some multi-bit failures can be corrected without resulting in system downtime.
- Online Spare Mode—Provides protection against failing or degraded DIMMs. Certain memory is set aside as spare, and automatic failover to spare memory occurs when the system detects a degraded DIMM. DIMMs that are likely to receive a fatal or uncorrectable memory error are removed from operation automatically, resulting in less system downtime.

For DIMM population requirements, see the server-specific user guide.

Re-entering the server serial number and product ID

After you replace the system board, you must re-enter the server serial number and the product ID.

1. During the server startup sequence, press the **F9** key to access RBSU.
2. Select the **Advanced Options** menu.
3. Select **Service Options**.
4. Select **Serial Number**. The following warning appears:

   ```
   Warning: The serial number should ONLY be modified by qualified service
   personnel. This value should always match the serial number located on the
   chassis.
   ```
5. Press the **Enter** key to clear the warning.
6. Enter the serial number and press the **Enter** key.
7. Select **Product ID**. The following warning appears:

   ```
   Warning: The Product ID should ONLY be modified by qualified service
   personnel. This value should always match the Product ID located on the
   chassis.
   ```
8. Enter the product ID and press the **Enter** key.
9. Press the **Esc** key to close the menu.
10. Press the **Esc** key to exit RBSU.
11. Press the **F10** key to confirm exiting RBSU. The server automatically reboots.

Utilities and features

Array Configuration Utility

ACU is a utility with the following features:

- Runs as a local application or remote service accessed through the HP System Management Homepage
- Supports online array capacity expansion, logical drive extension, assignment of online spares, and RAID or stripe size migration
- Suggests the optimum configuration for an unconfigured system
- For supported controllers, provides access to licensed features, including:
  - Moving and deleting individual logical volumes
  - Advanced Capacity Expansion (SATA to SAS and SAS to SATA)
  - Offline Split Mirror
  - RAID 6 and RAID 60
  - RAID 1 (ADM) and RAID 10 (ADM)
  - HP Drive Erase
  - Video-On-Demand Advanced Controller Settings
- Provides different operating modes, enabling faster configuration or greater control over the configuration options
- Remains available any time that the server is on
- Displays on-screen tips for individual steps of a configuration procedure
- Provides context-sensitive searchable help content
- Provides diagnostic and SmartSSD Wear Gauge functionality on the Diagnostics tab

ACU is now available as an embedded utility, starting with HP ProLiant Gen8 servers. To access ACU, use one of the following methods:

- If an optional controller is not installed, press **F10** during boot.
- If an optional controller is installed, when the system recognizes the controller during POST, press **F5**.

For optimum performance, the minimum display settings are 1024 × 768 resolution and 16-bit color. Servers running Microsoft® operating systems require one of the following supported browsers:

- Internet Explorer 6.0 or later
- Mozilla Firefox 2.0 or later

For Linux servers, see the README.TXT file for additional browser and support information.

For more information about the storage controller and its features, select the relevant controller user documentation on the HP website (http://www.hp.com/go/smartstorage/docs).

To configure arrays, see the *HP Smart Storage Administrator User Guide* on the HP website (http://www.hp.com/go/smartstorage/docs).

HP Smart Storage Administrator

HP SSA is a configuration and management tool for HP Smart Array controllers. Starting with HP ProLiant Gen8 servers, HP SSA replaces ACU with an enhanced GUI and additional configuration features.

HP SSA exists in three interface formats: the HP SSA GUI, the HP SSA CLI, and HP SSA Scripting. Although all formats provide support for configuration tasks, some of the advanced tasks are available in only one format.

Some HP SSA features include the following:

- Supports online array capacity expansion, logical drive extension, assignment of online spares, and RAID or stripe size migration
- Suggests the optimal configuration for an unconfigured system
- Provides diagnostic and SmartSSD Wear Gauge functionality on the Diagnostics tab
- For supported controllers, provides access to additional features.

For more information about HP SSA, see the HP website (http://www.hp.com/go/hpssa).

Option ROM Configuration for Arrays

Before installing an operating system, you can use the ORCA utility to create the first logical drive, assign RAID levels, and establish online spare configurations.

The utility also provides support for the following functions:

- Reconfiguring one or more logical drives
- Viewing the current logical drive configuration
- Deleting a logical drive configuration
- Setting the controller to be the boot controller
- Selecting the boot volume

If you do not use the utility, ORCA will default to the standard configuration.

For more information regarding the default configurations that ORCA uses, see the *HP ROM-Based Setup Utility User Guide* on the HP RBSU Information Library (http://www.hp.com/go/rbsu/docs).

For more information about the storage controller and its features, select the relevant controller user documentation on the HP website (http://www.hp.com/go/smartstorage/docs).

To configure arrays, see the *HP Smart Storage Administrator User Guide* on the HP website (http://www.hp.com/go/smartstorage/docs).

ROMPaq utility

The ROMPaq utility enables you to upgrade the system firmware (BIOS). To upgrade the firmware, insert a ROMPaq USB Key into an available USB port and boot the system. In addition to ROMPaq, Online Flash Components for Windows and Linux operating systems are available for updating the system firmware.

The ROMPaq utility checks the system and provides a choice (if more than one exists) of available firmware revisions.

For more information, go to the HP website (http://www.hp.com/go/hpsc) and click on **Drivers, Software & Firmware**. Then, enter your product name in the **Find an HP product** field and click **Go**.

Automatic Server Recovery

ASR is a feature that causes the system to restart when a catastrophic operating system error occurs, such as a blue screen, ABEND (does not apply to HP ProLiant DL980 Servers), or panic. A system fail-safe timer, the ASR timer, starts when the System Management driver, also known as the Health Driver, is loaded. When the operating system is functioning properly, the system periodically resets the timer. However, when the operating system fails, the timer expires and restarts the server.

ASR increases server availability by restarting the server within a specified time after a system hang. At the same time, the HP SIM console notifies you by sending a message to a designated pager number that ASR has restarted the system. You can disable ASR from the System Management Homepage or through RBSU.

USB support

HP provides standard USB 2.0 support, standard USB 3.0 support, and legacy USB support. Standard support is provided by the OS through the appropriate USB device drivers.

Before the OS loads, HP provides support for USB 2.0 devices through legacy USB support, which is enabled by default in the system ROM. USB 3.0 ports are not functional before the OS loads. The native OS provides USB 3.0 support through appropriate xHCI drivers.

Legacy USB support provides USB functionality in environments where USB support is not available normally. Specifically, HP provides legacy USB functionality for the following:

- POST
- RBSU
- Diagnostics
- DOS
- Operating environments which do not provide native USB support

Redundant ROM support

The server enables you to upgrade or configure the ROM safely with redundant ROM support. The server has a single ROM that acts as two separate ROM images. In the standard implementation, one side of the ROM contains the current ROM program version, while the other side of the ROM contains a backup version.

NOTE: The server ships with the same version programmed on each side of the ROM.

Safety and security benefits

When you flash the system ROM, ROMPaq writes over the backup ROM and saves the current ROM as a backup, enabling you to switch easily to the alternate ROM version if the new ROM becomes corrupted for any reason. This feature protects the existing ROM version, even if you experience a power failure while flashing the ROM.

Keeping the system current

Access to HP Support Materials

Access to some updates for HP ProLiant Servers may require product entitlement when accessed through the HP Support Center support portal. HP recommends that you have an HP Passport set up with relevant entitlements. For more information, see the HP website (http://h20564.www2.hp.com/portal/site/hpsc/public/kb/docDisplay/?docId=c03859703).

Drivers

IMPORTANT: Always perform a backup before installing or updating device drivers.

The server includes new hardware that may not have driver support on all OS installation media.

If you are installing an Intelligent Provisioning-supported OS, use Intelligent Provisioning (on page 87) and its Configure and Install feature to install the OS and latest supported drivers.

If you do not use Intelligent Provisioning to install an OS, drivers for some of the new hardware are required. These drivers, as well as other option drivers, ROM images, and value-add software can be downloaded as part of an SPP.

If you are installing drivers from SPP, be sure that you are using the latest SPP version that your server supports. To verify that your server is using the latest supported version and for more information about SPP, see the HP website (http://www.hp.com/go/spp/download).

To locate the drivers for a particular server, go to the HP website (http://www.hp.com/go/hpsc) and click on **Drivers, Software & Firmware**. Then, enter your product name in the **Find an HP product** field and click **Go**.

Software and firmware

Software and firmware should be updated before using the server for the first time, unless any installed software or components require an older version.

For system software and firmware updates, use one of the following sources:

- Download the SPP ("HP Service Pack for ProLiant" on page 89) from the HP Service Pack for ProLiant download page (http://www.hp.com/go/spp).
- Download individual drivers, firmware, or other systems software components from the server product page in the HP Support Center (http://www.hp.com/go/hpsc).

Version control

The VCRM and VCA are web-enabled Insight Management Agents tools that HP SIM uses to schedule software update tasks to the entire enterprise.

- VCRM manages the repository for SPP. Administrators can view the SPP contents or configure VCRM to automatically update the repository with internet downloads of the latest software and firmware from HP.

- VCA compares installed software versions on the node with updates available in the VCRM managed repository. Administrators configure VCA to point to a repository managed by VCRM.

For more information about version control tools, see the *HP Systems Insight Manager User Guide,* the *HP Version Control Agent User Guide*, and the *HP Version Control Repository Manager User Guide* on the HP website (http://www.hp.com/go/enterprise/docs).

1. Select **HP Insight Management** from the available options in Products and Solutions.
2. Select **HP Version Control** from the available options in HP Insight Management.
3. Download the latest document.

HP operating systems and virtualization software support for ProLiant servers

For information about specific versions of a supported operating system, see the HP website (http://www.hp.com/go/ossupport).

HP Technology Service Portfolio

HP Technology Services offers a targeted set of consultancy, deployment, and service solutions to meet the support needs of most business and IT environments.

Foundation Care services—Delivers scalable hardware and software support packages for HP ProLiant server and industry-standard software. You can choose the type and level of service that is most suitable for your business needs.

HP Collaborative Support—With a single call, HP addresses initial hardware and software support needs and helps to quickly identify if a problem is related to hardware or software. If the problem is related to hardware, HP resolves the problem according to service level commitments. If the reported incident is related to an HP software product or a supported third-party software product and cannot be resolved by applying known fixes, HP contacts the third-party vendor and creates a problem incident on your behalf.

HP Proactive Care—For customers running business critical environments where downtime is not an option, HP Proactive Care helps to deliver high levels of availability. Key to these service options is the delivery of proactive service management tools to help you avoid the causes of downtime. If a problem arises, then HP offers advanced technical response from critical system support specialists for problem identification and resolution.

HP Support Center—For all service options, the HP Support Center delivers the information, tools, and experts required to support HP business products.

HP Insight Remote Support—Provides 24x7 secure remote monitoring, diagnosis, and problem resolution.

For more information, see one of the following websites:

- HP ProLiant Server Services website (http://www.hp.com/services/proliant)
- HP BladeSystem Services website (http://www.hp.com/services/bladesystem)

Change control and proactive notification

HP offers Change Control and Proactive Notification to notify customers 30 to 60 days in advance of upcoming hardware and software changes on HP commercial products.

For more information, refer to the HP website (http://www.hp.com/go/pcn).

Troubleshooting

Troubleshooting resources

The *HP ProLiant Gen8 Troubleshooting Guide, Volume I: Troubleshooting* provides procedures for resolving common problems and comprehensive courses of action for fault isolation and identification, issue resolution, and software maintenance on ProLiant servers and server blades. To view the guide, select a language:

- English (http://www.hp.com/support/ProLiant_TSG_v1_en)
- French (http://www.hp.com/support/ProLiant_TSG_v1_fr)
- Spanish (http://www.hp.com/support/ProLiant_TSG_v1_sp)
- German (http://www.hp.com/support/ProLiant_TSG_v1_gr)
- Japanese (http://www.hp.com/support/ProLiant_TSG_v1_jp)
- Simplified Chinese (http://www.hp.com/support/ProLiant_TSG_v1_sc)

The *HP ProLiant Gen8 Troubleshooting Guide, Volume II: Error Messages* provides a list of error messages and information to assist with interpreting and resolving error messages on ProLiant servers and server blades. To view the guide, select a language:

- English (http://www.hp.com/support/ProLiant_EMG_v1_en)
- French (http://www.hp.com/support/ProLiant_EMG_v1_fr)
- Spanish (http://www.hp.com/support/ProLiant_EMG_v1_sp)
- German (http://www.hp.com/support/ProLiant_EMG_v1_gr)
- Japanese (http://www.hp.com/support/ProLiant_EMG_v1_jp)
- Simplified Chinese (http://www.hp.com/support/ProLiant_EMG_v1_sc)

System battery

If the server no longer automatically displays the correct date and time, then replace the battery that provides power to the real-time clock. Under normal use, battery life is 5 to 10 years.

⚠ **WARNING:** The computer contains an internal lithium manganese dioxide, a vanadium pentoxide, or an alkaline battery pack. A risk of fire and burns exists if the battery pack is not properly handled. To reduce the risk of personal injury:

- Do not attempt to recharge the battery.
- Do not expose the battery to temperatures higher than 60°C (140°F).
- Do not disassemble, crush, puncture, short external contacts, or dispose of in fire or water.
- Replace only with the spare designated for this product.

To remove the component:

1. Power down the server (on page 16).
2. Disconnect all peripheral cables from the server.

3. Remove the server from the chassis (on page 16).
4. Remove the front GPU cage (on page 17).
5. Remove the front GPU bracket (on page 19).
6. Remove the PCI riser cage (on page 23).
7. Locate the battery on the system board ("System board components" on page 10).
8. Remove the battery.

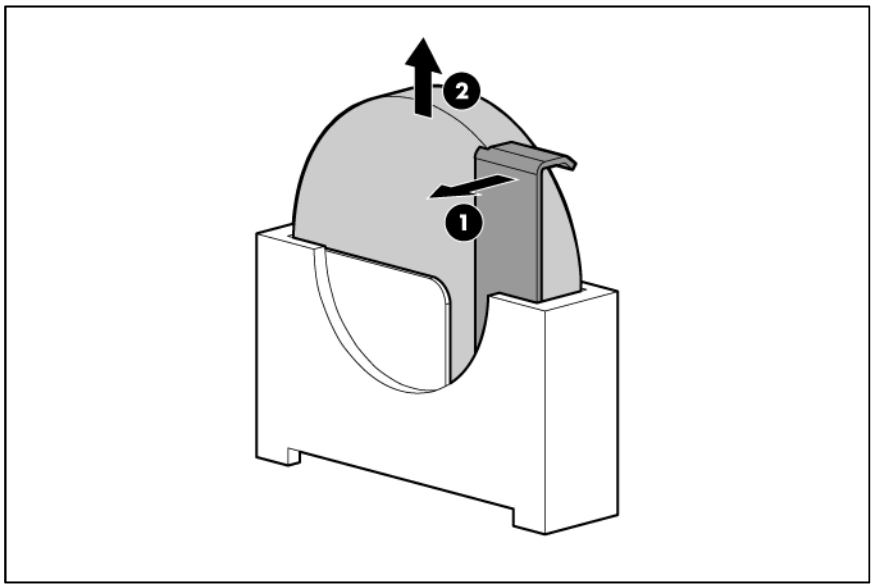

IMPORTANT: Replacing the system board battery resets the system ROM to its default configuration. After replacing the battery, reconfigure the system through RBSU.

To replace the component, reverse the removal procedure.

For more information about battery replacement or proper disposal, contact an authorized reseller or an authorized service provider.

Regulatory information

Safety and regulatory compliance

For safety, environmental, and regulatory information, see *Safety and Compliance Information for Server, Storage, Power, Networking, and Rack Products*, available at the HP website (http://www.hp.com/support/Safety-Compliance-EnterpriseProducts).

Belarus Kazakhstan Russia marking

Manufacturer

Hewlett-Packard Company, Address: 3000 Hanover Street, Palo Alto, California 94304, U.S.

Local representative information (Russian)

- HP Russia

  ЗАО "Хьюлетт-Паккард А.О.", 125171, Россия, г. Москва, Ленинградское шоссе, 16А, стр.3, тел/факс: +7 (495) 797 35 00, +7 (495) 287 89 05

- HP Belarus

  ИООО «Хьюлетт-Паккард Бел», 220030, Беларусь, г. Минск, ул. Интернациональная, 36-1, офис 722-723, тел.: +375 (17) 392 28 18, факс: +375 (17) 392 28 21

- HP Kazakhstan

  ТОО «Хьюлетт-Паккард (К), 050040, Казахстан, г. Алматы, Бостандыкский район, ул. Тимирязева, 28В, 1 этаж, тел./факс: +7 (727) 355 35 50, +7 (727) 355 35 51

Local representative information (Kazakh)

ЖШС «Хьюлетт-Паккард (К)», Қазақстан, Алматы қ., Бостандық ауданы, Тимирязев к-сі, 28В, тел./факс: +7 (727) 355 35 50, +7 (727) 355 35 51

Manufacturing date

The manufacturing date is defined by the serial number (HP serial number format for this product):
`CCSYWWZZZZ`

Valid date formats include the following:

- `YWW`, where `Y` indicates the year counting from within each new decade, with 2000 as the starting point. For example, 238: 2 for 2002 and 38 for the week of September 9. In addition, 2010 is indicated by 0, 2011 by 1, 2012 by 2, 2013 by 3, and so forth.
- `YYWW`, where `YY` indicates the year, using a base year of 2000. For example, 0238: 02 for 2002 and 38 for the week of September 9.

Turkey RoHS material content declaration

Türkiye Cumhuriyeti: EEE Yönetmeliğine Uygundur

Ukraine RoHS material content declaration

Обладнання відповідає вимогам Технічного регламенту щодо обмеження використання деяких небезпечних речовин в електричному та електронному обладнанні, затвердженого постановою Кабінету Міністрів України від 3 грудня 2008 № 1057

Warranty information

HP ProLiant and X86 Servers and Options (http://www.hp.com/support/ProLiantServers-Warranties)

HP Enterprise Servers (http://www.hp.com/support/EnterpriseServers-Warranties)

HP Storage Products (http://www.hp.com/support/Storage-Warranties)

HP Networking Products (http://www.hp.com/support/Networking-Warranties)

Electrostatic discharge

Preventing electrostatic discharge

To prevent damaging the system, be aware of the precautions you need to follow when setting up the system or handling parts. A discharge of static electricity from a finger or other conductor may damage system boards or other static-sensitive devices. This type of damage may reduce the life expectancy of the device.

To prevent electrostatic damage:

- Avoid hand contact by transporting and storing products in static-safe containers.
- Keep electrostatic-sensitive parts in their containers until they arrive at static-free workstations.
- Place parts on a grounded surface before removing them from their containers.
- Avoid touching pins, leads, or circuitry.
- Always be properly grounded when touching a static-sensitive component or assembly.

Grounding methods to prevent electrostatic discharge

Several methods are used for grounding. Use one or more of the following methods when handling or installing electrostatic-sensitive parts:

- Use a wrist strap connected by a ground cord to a grounded workstation or computer chassis. Wrist straps are flexible straps with a minimum of 1 megohm ±10 percent resistance in the ground cords. To provide proper ground, wear the strap snug against the skin.
- Use heel straps, toe straps, or boot straps at standing workstations. Wear the straps on both feet when standing on conductive floors or dissipating floor mats.
- Use conductive field service tools.
- Use a portable field service kit with a folding static-dissipating work mat.

If you do not have any of the suggested equipment for proper grounding, have an authorized reseller install the part.

For more information on static electricity or assistance with product installation, contact an authorized reseller.

Specifications

Environmental specifications

Specification	Value
Temperature range*	—
Operating	10°C to 35°C (50°F to 95°F)
Shipping	-40°C to 70°C (-40°F to 158°F)
Maximum wet bulb temperature	28°C (82.4°F)
130 W CPU option	10°C to 25°C (50°F to 77°F)
Relative humidity (noncondensing)**	—
Operating	10% to 90%
Nonoperating	5% to 95%

* All temperature ratings shown are for sea level. An altitude derating of 1°C per 300 m (1.8°F per 1,000 ft) to 3,048 m (10,000 ft) is applicable. No direct sunlight allowed.
** Storage maximum humidity of 95% is based on a maximum temperature of 45°C (113°F). Altitude maximum for storage corresponds to a pressure minimum of 70 kPa.

Server specifications

Specification	Value
Height	8.35 cm (3.29 in)
Depth	81.91 cm (32.25 in)
Width	22.08 cm (8.69 in)
Weight (maximum: two processors, eight hard drives)	12.25 kg (27.00 lb)

Hot-plug power supply calculations

For hot-plug power supply specifications and calculators to determine electrical and heat loading for the server, see the HP website (http://www.hp.com/go/hppoweradvisor).

Support and other resources

Before you contact HP

Be sure to have the following information available before you call HP:

- Active Health System log (HP ProLiant Gen8 or later products)

  Download and have available an Active Health System log for 7 days before the failure was detected. For more information, see the *HP iLO 4 User Guide* or *HP Intelligent Provisioning User Guide* on the HP website (http://www.hp.com/go/ilo/docs).
- Onboard Administrator SHOW ALL report (for HP BladeSystem products only)

  For more information on obtaining the Onboard Administrator SHOW ALL report, see the HP website (http://www.hp.com/go/OAlog).
- Technical support registration number (if applicable)
- Product serial number
- Product model name and number
- Product identification number
- Applicable error messages
- Add-on boards or hardware
- Third-party hardware or software
- Operating system type and revision level

HP contact information

For United States and worldwide contact information, see the Contact HP website (http://www.hp.com/go/assistance).

In the United States:

- To contact HP by phone, call 1-800-334-5144. For continuous quality improvement, calls may be recorded or monitored.
- If you have purchased a Care Pack (service upgrade), see the Support & Drivers website (http://www8.hp.com/us/en/support-drivers.html). If the problem cannot be resolved at the website, call 1-800-633-3600. For more information about Care Packs, see the HP website (http://pro-aq-sama.houston.hp.com/services/cache/10950-0-0-225-121.html).

Customer Self Repair

HP products are designed with many Customer Self Repair (CSR) parts to minimize repair time and allow for greater flexibility in performing defective parts replacement. If during the diagnosis period HP (or HP service

providers or service partners) identifies that the repair can be accomplished by the use of a CSR part, HP will ship that part directly to you for replacement. There are two categories of CSR parts:

- **Mandatory**—Parts for which customer self repair is mandatory. If you request HP to replace these parts, you will be charged for the travel and labor costs of this service.
- **Optional**—Parts for which customer self repair is optional. These parts are also designed for customer self repair. If, however, you require that HP replace them for you, there may or may not be additional charges, depending on the type of warranty service designated for your product.

NOTE: Some HP parts are not designed for customer self repair. In order to satisfy the customer warranty, HP requires that an authorized service provider replace the part. These parts are identified as "No" in the Illustrated Parts Catalog.

Based on availability and where geography permits, CSR parts will be shipped for next business day delivery. Same day or four-hour delivery may be offered at an additional charge where geography permits. If assistance is required, you can call the HP Technical Support Center and a technician will help you over the telephone. HP specifies in the materials shipped with a replacement CSR part whether a defective part must be returned to HP. In cases where it is required to return the defective part to HP, you must ship the defective part back to HP within a defined period of time, normally five (5) business days. The defective part must be returned with the associated documentation in the provided shipping material. Failure to return the defective part may result in HP billing you for the replacement. With a customer self repair, HP will pay all shipping and part return costs and determine the courier/carrier to be used.

For more information about HP's Customer Self Repair program, contact your local service provider. For the North American program, refer to the HP website (http://www.hp.com/go/selfrepair).

Réparation par le client (CSR)

Les produits HP comportent de nombreuses pièces CSR (Customer Self Repair = réparation par le client) afin de minimiser les délais de réparation et faciliter le remplacement des pièces défectueuses. Si pendant la période de diagnostic, HP (ou ses partenaires ou mainteneurs agréés) détermine que la réparation peut être effectuée à l'aide d'une pièce CSR, HP vous l'envoie directement. Il existe deux catégories de pièces CSR:

Obligatoire - Pièces pour lesquelles la réparation par le client est obligatoire. Si vous demandez à HP de remplacer ces pièces, les coûts de déplacement et main d'œuvre du service vous seront facturés.

Facultatif - Pièces pour lesquelles la réparation par le client est facultative. Ces pièces sont également conçues pour permettre au client d'effectuer lui-même la réparation. Toutefois, si vous demandez à HP de remplacer ces pièces, l'intervention peut ou non vous être facturée, selon le type de garantie applicable à votre produit.

REMARQUE: Certaines pièces HP ne sont pas conçues pour permettre au client d'effectuer lui-même la réparation. Pour que la garantie puisse s'appliquer, HP exige que le remplacement de la pièce soit effectué par un Mainteneur Agréé. Ces pièces sont identifiées par la mention "Non" dans le Catalogue illustré.

Les pièces CSR sont livrées le jour ouvré suivant, dans la limite des stocks disponibles et selon votre situation géographique. Si votre situation géographique le permet et que vous demandez une livraison le jour même ou dans les 4 heures, celle-ci vous sera facturée. Pour bénéficier d'une assistance téléphonique, appelez le Centre d'assistance technique HP. Dans les documents envoyés avec la pièce de rechange CSR, HP précise s'il est nécessaire de lui retourner la pièce défectueuse. Si c'est le cas, vous devez le faire dans le délai indiqué, généralement cinq (5) jours ouvrés. La pièce et sa documentation doivent être retournées dans l'emballage fourni. Si vous ne retournez pas la pièce défectueuse, HP se réserve le droit de vous facturer les coûts de remplacement. Dans le cas d'une pièce CSR, HP supporte l'ensemble des frais d'expédition et de retour, et détermine la société de courses ou le transporteur à utiliser.

Pour plus d'informations sur le programme CSR de HP, contactez votre Mainteneur Agrée local. Pour plus d'informations sur ce programme en Amérique du Nord, consultez le site Web HP (http://www.hp.com/go/selfrepair).

Riparazione da parte del cliente

Per abbreviare i tempi di riparazione e garantire una maggiore flessibilità nella sostituzione di parti difettose, i prodotti HP sono realizzati con numerosi componenti che possono essere riparati direttamente dal cliente (CSR, Customer Self Repair). Se in fase di diagnostica HP (o un centro di servizi o di assistenza HP) identifica il guasto come riparabile mediante un ricambio CSR, HP lo spedirà direttamente al cliente per la sostituzione. Vi sono due categorie di parti CSR:

Obbligatorie – Parti che devono essere necessariamente riparate dal cliente. Se il cliente ne affida la riparazione ad HP, deve sostenere le spese di spedizione e di manodopera per il servizio.

Opzionali – Parti la cui riparazione da parte del cliente è facoltativa. Si tratta comunque di componenti progettati per questo scopo. Se tuttavia il cliente ne richiede la sostituzione ad HP, potrebbe dover sostenere spese addizionali a seconda del tipo di garanzia previsto per il prodotto.

NOTA: alcuni componenti HP non sono progettati per la riparazione da parte del cliente. Per rispettare la garanzia, HP richiede che queste parti siano sostituite da un centro di assistenza autorizzato. Tali parti sono identificate da un "No" nel Catalogo illustrato dei componenti.

In base alla disponibilità e alla località geografica, le parti CSR vengono spedite con consegna entro il giorno lavorativo seguente. La consegna nel giorno stesso o entro quattro ore è offerta con un supplemento di costo solo in alcune zone. In caso di necessità si può richiedere l'assistenza telefonica di un addetto del centro di supporto tecnico HP. Nel materiale fornito con una parte di ricambio CSR, HP specifica se il cliente deve restituire dei componenti. Qualora sia richiesta la resa ad HP del componente difettoso, lo si deve spedire ad HP entro un determinato periodo di tempo, generalmente cinque (5) giorni lavorativi. Il componente difettoso deve essere restituito con la documentazione associata nell'imballo di spedizione fornito. La mancata restituzione del componente può comportare la fatturazione del ricambio da parte di HP. Nel caso di riparazione da parte del cliente, HP sostiene tutte le spese di spedizione e resa e sceglie il corriere/vettore da utilizzare.

Per ulteriori informazioni sul programma CSR di HP contattare il centro di assistenza di zona. Per il programma in Nord America fare riferimento al sito Web HP (http://www.hp.com/go/selfrepair).

Customer Self Repair

HP Produkte enthalten viele CSR-Teile (Customer Self Repair), um Reparaturzeiten zu minimieren und höhere Flexibilität beim Austausch defekter Bauteile zu ermöglichen. Wenn HP (oder ein HP Servicepartner) bei der Diagnose feststellt, dass das Produkt mithilfe eines CSR-Teils repariert werden kann, sendet Ihnen HP dieses Bauteil zum Austausch direkt zu. CSR-Teile werden in zwei Kategorien unterteilt:

Zwingend – Teile, für die das Customer Self Repair-Verfahren zwingend vorgegeben ist. Wenn Sie den Austausch dieser Teile von HP vornehmen lassen, werden Ihnen die Anfahrt- und Arbeitskosten für diesen Service berechnet.

Optional – Teile, für die das Customer Self Repair-Verfahren optional ist. Diese Teile sind auch für Customer Self Repair ausgelegt. Wenn Sie jedoch den Austausch dieser Teile von HP vornehmen lassen möchten, können bei diesem Service je nach den für Ihr Produkt vorgesehenen Garantiebedingungen zusätzliche Kosten anfallen.

HINWEIS: Einige Teile sind nicht für Customer Self Repair ausgelegt. Um den Garantieanspruch des Kunden zu erfüllen, muss das Teil von einem HP Servicepartner ersetzt werden. Im illustrierten Teilekatalog sind diese Teile mit „No“ bzw. „Nein“ gekennzeichnet.

CSR-Teile werden abhängig von der Verfügbarkeit und vom Lieferziel am folgenden Geschäftstag geliefert. Für bestimmte Standorte ist eine Lieferung am selben Tag oder innerhalb von vier Stunden gegen einen Aufpreis verfügbar. Wenn Sie Hilfe benötigen, können Sie das HP technische Support Center anrufen und sich von einem Mitarbeiter per Telefon helfen lassen. Den Materialien, die mit einem CSR-Ersatzteil geliefert werden, können Sie entnehmen, ob das defekte Teil an HP zurückgeschickt werden muss. Wenn es erforderlich ist, das defekte Teil an HP zurückzuschicken, müssen Sie dies innerhalb eines vorgegebenen Zeitraums tun, in der Regel innerhalb von fünf (5) Geschäftstagen. Das defekte Teil muss mit der zugehörigen Dokumentation in der Verpackung zurückgeschickt werden, die im Lieferumfang enthalten ist. Wenn Sie das defekte Teil nicht zurückschicken, kann HP Ihnen das Ersatzteil in Rechnung stellen. Im Falle von Customer Self Repair kommt HP für alle Kosten für die Lieferung und Rücksendung auf und bestimmt den Kurier-/Frachtdienst.

Weitere Informationen über das HP Customer Self Repair Programm erhalten Sie von Ihrem Servicepartner vor Ort. Informationen über das CSR-Programm in Nordamerika finden Sie auf der HP Website unter (http://www.hp.com/go/selfrepair).

Reparaciones del propio cliente

Los productos de HP incluyen muchos componentes que el propio usuario puede reemplazar (*Customer Self Repair*, CSR) para minimizar el tiempo de reparación y ofrecer una mayor flexibilidad a la hora de realizar sustituciones de componentes defectuosos. Si, durante la fase de diagnóstico, HP (o los proveedores o socios de servicio de HP) identifica que una reparación puede llevarse a cabo mediante el uso de un componente CSR, HP le enviará dicho componente directamente para que realice su sustitución. Los componentes CSR se clasifican en dos categorías:

- **Obligatorio:** componentes para los que la reparación por parte del usuario es obligatoria. Si solicita a HP que realice la sustitución de estos componentes, tendrá que hacerse cargo de los gastos de desplazamiento y de mano de obra de dicho servicio.
- **Opcional:** componentes para los que la reparación por parte del usuario es opcional. Estos componentes también están diseñados para que puedan ser reparados por el usuario. Sin embargo, si precisa que HP realice su sustitución, puede o no conllevar costes adicionales, dependiendo del tipo de servicio de garantía correspondiente al producto.

NOTA: Algunos componentes no están diseñados para que puedan ser reparados por el usuario. Para que el usuario haga valer su garantía, HP pone como condición que un proveedor de servicios autorizado realice la sustitución de estos componentes. Dichos componentes se identifican con la palabra "No" en el catálogo ilustrado de componentes.

Según la disponibilidad y la situación geográfica, los componentes CSR se enviarán para que lleguen a su destino al siguiente día laborable. Si la situación geográfica lo permite, se puede solicitar la entrega en el mismo día o en cuatro horas con un coste adicional. Si precisa asistencia técnica, puede llamar al Centro de asistencia técnica de HP y recibirá ayuda telefónica por parte de un técnico. Con el envío de materiales para la sustitución de componentes CSR, HP especificará si los componentes defectuosos deberán devolverse a HP. En aquellos casos en los que sea necesario devolver algún componente a HP, deberá hacerlo en el periodo de tiempo especificado, normalmente cinco días laborables. Los componentes defectuosos deberán devolverse con toda la documentación relacionada y con el embalaje de envío. Si no enviara el componente defectuoso requerido, HP podrá cobrarle por el de sustitución. En el caso de todas

sustituciones que lleve a cabo el cliente, HP se hará cargo de todos los gastos de envío y devolución de componentes y escogerá la empresa de transporte que se utilice para dicho servicio.

Para obtener más información acerca del programa de Reparaciones del propio cliente de HP, póngase en contacto con su proveedor de servicios local. Si está interesado en el programa para Norteamérica, visite la página web de HP siguiente (http://www.hp.com/go/selfrepair).

Customer Self Repair

Veel onderdelen in HP producten zijn door de klant zelf te repareren, waardoor de reparatieduur tot een minimum beperkt kan blijven en de flexibiliteit in het vervangen van defecte onderdelen groter is. Deze onderdelen worden CSR-onderdelen (Customer Self Repair) genoemd. Als HP (of een HP Service Partner) bij de diagnose vaststelt dat de reparatie kan worden uitgevoerd met een CSR-onderdeel, verzendt HP dat onderdeel rechtstreeks naar u, zodat u het defecte onderdeel daarmee kunt vervangen. Er zijn twee categorieën CSR-onderdelen:

Verplicht: Onderdelen waarvoor reparatie door de klant verplicht is. Als u HP verzoekt deze onderdelen voor u te vervangen, worden u voor deze service reiskosten en arbeidsloon in rekening gebracht.

Optioneel: Onderdelen waarvoor reparatie door de klant optioneel is. Ook deze onderdelen zijn ontworpen voor reparatie door de klant. Als u echter HP verzoekt deze onderdelen voor u te vervangen, kunnen daarvoor extra kosten in rekening worden gebracht, afhankelijk van het type garantieservice voor het product.

OPMERKING: Sommige HP onderdelen zijn niet ontwikkeld voor reparatie door de klant. In verband met de garantievoorwaarden moet het onderdeel door een geautoriseerde Service Partner worden vervangen. Deze onderdelen worden in de geïllustreerde onderdelencatalogus aangemerkt met "Nee".

Afhankelijk van de leverbaarheid en de locatie worden CSR-onderdelen verzonden voor levering op de eerstvolgende werkdag. Levering op dezelfde dag of binnen vier uur kan tegen meerkosten worden aangeboden, indien dit mogelijk is gezien de locatie. Indien assistentie gewenst is, belt u een HP Service Partner om via de telefoon technische ondersteuning te ontvangen. HP vermeldt in de documentatie bij het vervangende CSR-onderdeel of het defecte onderdeel aan HP moet worden geretourneerd. Als het defecte onderdeel aan HP moet worden teruggezonden, moet u het defecte onderdeel binnen een bepaalde periode, gewoonlijk vijf (5) werkdagen, retourneren aan HP. Het defecte onderdeel moet met de bijbehorende documentatie worden geretourneerd in het meegeleverde verpakkingsmateriaal. Als u het defecte onderdeel niet terugzendt, kan HP u voor het vervangende onderdeel kosten in rekening brengen. Bij reparatie door de klant betaalt HP alle verzendkosten voor het vervangende en geretourneerde onderdeel en kiest HP zelf welke koerier/transportonderneming hiervoor wordt gebruikt.

Neem contact op met een Service Partner voor meer informatie over het Customer Self Repair programma van HP. Informatie over Service Partners vindt u op de HP website (http://www.hp.com/go/selfrepair).

Reparo feito pelo cliente

Os produtos da HP são projetados com muitas peças para reparo feito pelo cliente (CSR) de modo a minimizar o tempo de reparo e permitir maior flexibilidade na substituição de peças com defeito. Se, durante o período de diagnóstico, a HP (ou fornecedores/parceiros de serviço da HP) concluir que o reparo pode ser efetuado pelo uso de uma peça CSR, a peça de reposição será enviada diretamente ao cliente. Existem duas categorias de peças CSR:

Obrigatória – Peças cujo reparo feito pelo cliente é obrigatório. Se desejar que a HP substitua essas peças, serão cobradas as despesas de transporte e mão-de-obra do serviço.

Opcional – Peças cujo reparo feito pelo cliente é opcional. Essas peças também são projetadas para o reparo feito pelo cliente. No entanto, se desejar que a HP as substitua, pode haver ou não a cobrança de taxa adicional, dependendo do tipo de serviço de garantia destinado ao produto.

OBSERVAÇÃO: Algumas peças da HP não são projetadas para o reparo feito pelo cliente. A fim de cumprir a garantia do cliente, a HP exige que um técnico autorizado substitua a peça. Essas peças estão identificadas com a marca "No" (Não), no catálogo de peças ilustrado.

Conforme a disponibilidade e o local geográfico, as peças CSR serão enviadas no primeiro dia útil após o pedido. Onde as condições geográficas permitirem, a entrega no mesmo dia ou em quatro horas pode ser feita mediante uma taxa adicional. Se precisar de auxílio, entre em contato com o Centro de suporte técnico da HP para que um técnico o ajude por telefone. A HP especifica nos materiais fornecidos com a peça CSR de reposição se a peça com defeito deve ser devolvida à HP. Nos casos em que isso for necessário, é preciso enviar a peça com defeito à HP dentro do período determinado, normalmente cinco (5) dias úteis. A peça com defeito deve ser enviada com a documentação correspondente no material de transporte fornecido. Caso não o faça, a HP poderá cobrar a reposição. Para as peças de reparo feito pelo cliente, a HP paga todas as despesas de transporte e de devolução da peça e determina a transportadora/serviço postal a ser utilizado.

Para obter mais informações sobre o programa de reparo feito pelo cliente da HP, entre em contato com o fornecedor de serviços local. Para o programa norte-americano, visite o site da HP (http://www.hp.com/go/selfrepair).

カスタマーセルフリペア

修理時間を短縮し、故障部品の交換における高い柔軟性を確保するために、HP製品には多数のCSR部品があります。診断の際に、CSR部品を使用すれば修理ができるとHP（HPまたはHP正規保守代理店）が判断した場合、HPはその部品を直接、お客様に発送し、お客様に交換していただきます。CSR部品には以下の2通りがあります。

- **必須 -** カスタマーセルフリペアが必須の部品。当該部品について、もしもお客様がHPに交換作業を依頼される場合には、その修理サービスに関する交通費および人件費がお客様に請求されます。
- **任意 -** カスタマーセルフリペアが任意である部品。この部品もカスタマーセルフリペア用です。当該部品について、もしもお客様がHPに交換作業を依頼される場合には、お買い上げの製品に適用される保証サービス内容の範囲内においては、別途費用を負担していただくことなく保証サービスを受けることができます。

注： HP製品の一部の部品は、カスタマーセルフリペア用ではありません。製品の保証を継続するためには、HPまたはHP正規保守代理店による交換作業が必須となります。部品カタログには、当該部品がカスタマーセルフリペア除外品である旨が記載されています。

部品供給が可能な場合、地域によっては、CSR部品を翌営業日に届くように発送します。また、地域によっては、追加費用を負担いただくことにより同日または4時間以内に届くように発送することも可能な場合があります。サポートが必要なときは、HPの修理受付窓口に電話していただければ、技術者が電話でアドバイスします。交換用のCSR部品または同梱物には、故障部品をHPに返送する必要があるかどうかが表示されています。故障部品をHPに返送する必要がある場合は、指定期限内（通常は5営業日以内）に故障部品をHPに返送してください。故障部品を返送する場合は、届いた時の梱包箱に関連書類とともに入れてください。故障部品を返送しない場合、HPから部品費用が請求されます。カスタマーセルフリペアの際には、HPは送料および部品返送費を全額負担し、使用する宅配便会社や運送会社を指定します。

客户自行维修

HP 产品提供许多客户自行维修 (CSR) 部件，以尽可能缩短维修时间和在更换缺陷部件方面提供更大的灵活性。如果在诊断期间 HP（或 HP 服务提供商或服务合作伙伴）确定可以通过使用 CSR 部件完成维修，HP 将直接把该部件发送给您进行更换。有两类 CSR 部件：

- **强制性的** — 要求客户必须自行维修的部件。如果您请求 HP 更换这些部件，则必须为该服务支付差旅费和人工费用。
- **可选的** — 客户可以选择是否自行维修的部件。这些部件也是为客户自行维修设计的。不过，如果您要求 HP 为您更换这些部件，则根据为您的产品指定的保修服务类型，HP 可能收取或不再收取任何附加费用。

注：某些 HP 部件的设计并未考虑客户自行维修。为了满足客户保修的需要，HP 要求授权服务提供商更换相关部件。这些部件在部件图解目录中标记为“否”。

CSR 部件将在下一个工作日发运（取决于备货情况和允许的地理范围）。在允许的地理范围内，可在当天或四小时内发运，但要收取额外费用。如果需要帮助，您可以致电 HP 技术支持中心，将会有技术人员通过电话为您提供帮助。HP 会在随更换的 CSR 部件发运的材料中指明是否必须将有缺陷的部件返还给 HP。如果要求您将有缺陷的部件返还给 HP，那么您必须在规定期限内（通常是五 (5) 个工作日）将缺陷部件发给 HP。有缺陷的部件必须随所提供的发运材料中的相关文件一起返还。如果未能送还有缺陷的部件，HP 可能会要求您支付更换费用。客户自行维修时，HP 将承担所有相关运输和部件返回费用，并指定快递商/承运商。

有关 HP 客户自行维修计划的详细信息，请与您当地的服务提供商联系。有关北美地区的计划，请访问 HP 网站 (http://www.hp.com/go/selfrepair)。

客戶自行維修

HP 產品設計了許多「客戶自行維修」(CSR) 的零件以減少維修時間，並且使得更換瑕疵零件時能有更大的彈性。如果在診斷期間 HP（或 HP 服務供應商或維修夥伴）辨認出此項維修工作可以藉由使用 CSR 零件來完成，則 HP 將直接寄送該零件給您作更換。CSR 零件分為兩種類別：

- **強制的** — 客戶自行維修所使用的零件是強制性的。如果您要求 HP 更換這些零件，HP 將會向您收取此服務所需的外出費用與勞動成本。
- **選購的** — 客戶自行維修所使用的零件是選購的。這些零件也設計用於客戶自行維修之用。不過，如果您要求 HP 為您更換，則可能需要也可能不需要負擔額外的費用，端視針對此產品指定的保固服務類型而定。

備註：某些 HP 零件沒有消費者可自行維修的設計。為符合客戶保固，HP 需要授權的服務供應商更換零件。這些零件在圖示的零件目錄中，被標示為「否」。

基於材料取得及環境允許的情況下，CSR 零件將於下一個工作日以快遞寄送。在環境的允許下當天或四小時內送達，則可能需要額外的費用。若您需要協助，可致電「HP 技術支援中心」，會有一位技術人員透過電話來協助您。不論損壞的零件是否必須退回，HP 皆會在與 CSR 替換零件一起運送的材料中註明。若要將損壞的零件退回 HP，您必須在指定的一段時間內（通常為五 (5) 個工作天），將損壞的零件寄回 HP。損壞的零件必須與寄送資料中隨附的相關技術文件一併退還。如果無法退還損壞的零件，HP 可能要向您收取替換費用。針對客戶自行維修情形，HP 將負責所有運費及零件退還費用並指定使用何家快遞/貨運公司。

如需 HP 的「客戶自行維修」方案詳細資訊，請連絡您當地的服務供應商。至於北美方案，請參閱 HP 網站 (http://www.hp.com/go/selfrepair)。

고객 셀프 수리

HP 제품은 수리 시간을 최소화하고 결함이 있는 부품 교체 시 더욱 융통성을 발휘할 수 있도록 하기 위해 고객 셀프 수리(CSR) 부품을 다량 사용하여 설계되었습니다. 진단 기간 동안 HP(또는 HP 서비스 공급업체 또는 서비스 협력업체)에서 CSR 부품을 사용하여 수리가 가능하다고 판단되면 HP는 해당 부품을 바로 사용자에게 보내어 사용자가 교체할 수 있도록 합니다. CSR 부품에는 두 가지 종류가 있습니다.

- **고객 셀프 수리가 의무 사항인 필수 부품.** 사용자가 HP에 이 부품의 교체를 요청할 경우 이 서비스에 대한 출장비 및 작업비가 청구됩니다.
- **고객 셀프 수리가 선택 사항인 부품.** 이 부품들도 고객 셀프 수리가 가능하도록 설계되었습니다. 하지만 사용자가 HP에 이 부품의 교체를 요청할 경우 사용자가 구입한 제품에 해당하는 보증 서비스 유형에 따라 추가 비용 없이 교체가 가능할 수 있습니다.

참고: 일부 HP 부품은 고객 셀프 수리가 불가능하도록 설계되었습니다. HP는 만족스러운 고객 보증을 위해 공인 서비스 제공업체를 통해 부품을 교체하도록 하고 있습니다. 이러한 부품들은 Illustrated Parts Catalog에 "No"라고 표시되어 있습니다.

CSR 부품은 재고 상태와 지리적 조건이 허용하는 경우 다음 영업일 납품이 가능하도록 배송이 이루어집니다. 지리적 조건이 허용하는 경우 추가 비용이 청구되는 조건으로 당일 또는 4시간 배송이 가능할 수도 있습니다. 도움이 필요하시면 HP 기술 지원 센터로 전화하십시오. 전문 기술자가 전화로 도움을 줄 것입니다. HP는 결함이 발생한 부품을 HP로 반환해야 하는지 여부를 CSR 교체 부품과 함께 배송된 자료에 지정합니다. 결함이 발생한 부품을 HP로 반환해야 하는 경우에는 지정된 기간 내(통상 영업일 기준 5일)에 HP로 반환해야 합니다. 이 때 결함이 발생한 부품은 제공된 포장 재료에 넣어 관련 설명서와 함께 반환해야 합니다. 결함이 발생한 부품을 반환하지 않는 경우 HP가 교체 부품에 대해 비용을 청구할 수 있습니다. 고객 셀프 수리의 경우, HP는 모든 운송 및 부품 반환 비용을 부담하며 이용할 운송업체 및 택배 서비스를 결정합니다.

HP 고객 셀프 수리 프로그램에 대한 자세한 내용은 가까운 서비스 제공업체에 문의하십시오. 북미 지역의 프로그램에 대해서는 HP 웹 사이트(http://www.hp.com/go/selfrepair)를 참조하십시오.

Acronyms and abbreviations

ABEND

abnormal end

ACU

Array Configuration Utility

ADM

Advanced Data Mirroring

AMP

Advanced Memory Protection

ASR

Automatic Server Recovery

BAR

base address register

BMC

baseboard management controller

CSA

Canadian Standards Association

CSR

Customer Self Repair

DDDC

Double Device Data Correction

DDR

double data rate

ESD

electrostatic discharge

FBWC

flash-backed write cache

GPU

graphics processing unit

HDD

hard drive

HP APM

HP Advanced Power Manager

HP SIM

HP Systems Insight Manager

HP SUM

HP Smart Update Manager

IEC

International Electrotechnical Commission

iLO

Integrated Lights-Out

IML

Integrated Management Log

ISO

International Organization for Standardization

LFF

large form factor

LOM

LAN on Motherboard

LRDIMM

load reduced dual in-line memory module

NMI

nonmaskable interrupt

NVRAM

nonvolatile memory

OA

Onboard Administrator

ORCA

Option ROM Configuration for Arrays

PCIe

Peripheral Component Interconnect Express

PCI-X

peripheral component interconnect extended

POST

Power-On Self Test

RBSU

ROM-Based Setup Utility

RDIMM

registered dual in-line memory module

RDP

Rapid Deployment Pack

RPS

redundant power supply

SAS

serial attached SCSI

SATA

serial ATA

SDDC

Single Device Data Correction

SFF

small form factor

SIM

Systems Insight Manager

SPP

HP Service Pack for ProLiant

SSD

solid-state drive

SUV

serial, USB, video

TMRA

recommended ambient operating temperature

TPM

Trusted Platform Module

UDIMM

unregistered dual in-line memory module

UID

unit identification

USB

universal serial bus

VCA

Version Control Agent

VCRM

Version Control Repository Manager

Documentation feedback

HP is committed to providing documentation that meets your needs. To help us improve the documentation, send any errors, suggestions, or comments to Documentation Feedback (mailto:docsfeedback@hp.com). Include the document title and part number, version number, or the URL when submitting your feedback.

Index

A

ACU (Array Configuration Utility) 84, 92, 93
Advanced ECC memory 42, 43, 91
Advanced ECC support 42
airflow requirements 27, 28
Array Configuration Utility (ACU) 92, 93
ASR (Automatic Server Recovery) 94
authorized reseller 102, 104
auto-configuration process 90
Automatic Server Recovery (ASR) 94

B

BIOS upgrade 84, 93
boot options 32, 91
BSMI notice 100
buttons 7, 10

C

cables 75
cabling 56, 69, 75, 78, 82
cabling, drive cage 76, 80, 81
cabling, quick-release drive cage 80, 81
cabling, storage system 80
Care Pack 27, 86, 96, 104
cautions 102
Change Control 93, 96
chassis, removing server 16
components 7
components, identification 7, 8, 11
components, system board 10
configuration of system 32, 84
connectors 7
contacting HP 104
controller options 56

D

Declaration of Conformity 100, 101
default settings 42
diagnosing problems 98
diagnostic tools 84, 88, 93, 94
diagnostics utility 88
DIMM identification 41
DIMM population guidelines 43
DIMMs 11, 40
DIMMs, installing 44
DIMMs, single- and dual-rank 40
drive cage, removing 22
drive LEDs 14
drive numbering 13
drivers 95
drives 14, 51
drives, installing 45, 51

E

electrical grounding requirements 29
electrostatic discharge 102
environmental requirements 27, 103
Erase Utility 84, 88
European Union notice 100
expansion board 58

F

FBWC capacitor cabling 82
FBWC capacitor pack 53
features 7, 92
Federal Communications Commission (FCC) notice 100
FlexibleLOM riser cage 25
FlexibleLOM riser cage, removing 25
front GPU cage 17
front panel buttons 8
front panel components 7, 8
front panel LEDs 8

G

GPU bracket 20
GPU bracket, installing 20, 61
GPU cabling 78, 79
GPU cage 17
GPU cage, installing 17, 60
GPU location 61, 78
GPU module, removing 17
grounding methods 102
grounding requirements 29, 102

H

hard drive LEDs 14
hard drives, determining status of 14
hardware options 35
hardware options installation 35
health driver 94
health LEDs 8
HP Insight Diagnostics 88
HP SmartMemory 40

I

iLO (Integrated Lights-Out) 84, 85, 86
iLO connector 7
IML (Integrated Management Log) 84, 86
Insight Diagnostics 88, 95
installation services 27
installation, server options 35
installing hardware 35
installing server into chassis 31
Integrated Lights-Out (iLO) 84, 86
Integrated Management Log (IML) 86
Intelligent Provisioning 34, 84, 87, 88
interposer board 19
interposer board, removing 18

J

Japanese notice 100

L

LED, system power 8
LEDs 10, 14
LEDs, drive 14
LEDs, front panel 8, 14
LEDs, hard drive 14
LEDs, NIC 8
LEDs, power supply 10
LEDs, SAS hard drive 14
LEDs, troubleshooting 98
LEDs, unit identification (UID) 8, 10
lockstep memory 42, 44

M

memory 11, 39, 40, 42
memory options 39
memory subsystem architecture 40
memory, Advanced ECC 42, 91
memory, configuration requirements 42, 44
memory, configuring 42
memory, online spare 42, 91

N

NIC connectors 7
NMI header 10, 13

O

online spare memory 42, 43, 91
operating systems 96
operations 16
optimum environment 27
Option ROM Configuration for Arrays (ORCA) 84, 93
options installation 35, 45, 58
ORCA (Option ROM Configuration for Arrays) 84, 93

P

PCI expansion slots 58
phone numbers 104
population guidelines, Advanced ECC 43
power cables 75
power cabling 75, 76, 77
power distribution unit (PDU) 29
power requirements 29, 103
power supply 103
power supply LEDs 10
powering down 16
powering up 32
preparation procedures 16
problem diagnosis 98
processor air baffle 21
processor option 35

Q

quick-release drive 51
quick-release drive cage 46

R

rack installation 27, 29
rack warnings 29
RBSU (ROM-Based Setup Utility) 84, 89, 90, 91
RBSU configuration 90
rear panel LEDs 10
redundant power supply 69
redundant ROM 94
registering the server 34
regulatory compliance notices 100

removing server from chassis 16
requirements, airflow 27
requirements, power 29, 103
requirements, space 27
requirements, temperature 28
riser board cabling 79
ROM redundancy 94
ROM-Based Setup Utility (RBSU) 89
ROMPaq utility 84, 93, 94

S

safety considerations 29, 94, 100, 102
safety information 94, 100
SAS cabling 56, 80
SAS drives 14
scripted installation 87
serial connector 7
serial number 91
series number 100
server features and options 35
server, installation 31
SFF drive cage 23
shipping carton contents 30
software 34, 95, 96
space requirements 27
specifications 103
static electricity 102
support 104
supported operating systems 96
SUV connector 7
system battery 98, 100, 102
system board components 10
System Erase Utility 88
system maintenance switch 12, 60

T

Taiwan battery recycling notice 100
technical support 96, 104
telephone numbers 104
temperature requirements 28, 103
TPM (Trusted Platform Module) 74
TPM connector 10
troubleshooting 98
Trusted Platform Module (TPM) 72, 74

U

UID button 8, 10
UID LED 10
updating the system ROM 94
USB connector 7
USB support 94
utilities 84, 92
utilities, deployment 84, 87

V

ventilation 27

W

warnings 29