RETIRED: This document has been officially retired, and the base products listed herein are now considered obsolete and are no longer available for sale. Consequently, the information contained within may no longer be current. This document is provided exclusively for reference and informational purposes.

Overview

HP ProLiant SL250s Generation 8 (Gen8)

The HP ProLiant SL250s Gen8 Server with HP ProActive Insight architecture delivers even greater levels of configurability for high performance and scale-out deployments, to help lower total cost of ownership.

Up to four HP ProLiant SL250s Gen8 nodes, in a half-width, 2U modular form factor, fit into the HP s6500 scalable system chassis. In addition, each node can support up to three GPUs or four additional 2.5-inch small form factor hard drives.

The SL250s Gen8 Server series includes the exclusive HP SmartMemory and delivers a 25% increase in memory bandwidth to improve performance for certain applications.

Delivering on the promise of server lifecycle automation, the SL250s Gen8 features the exclusive HP Active Health System that provides continuous, proactive, monitoring for over 1600 system parameters with zero impact to application performance.

NOTE: The 2U Open View image below shows two SL250s side by side to denote the left and right trays. Each unit is a 2U, half-width form factor.

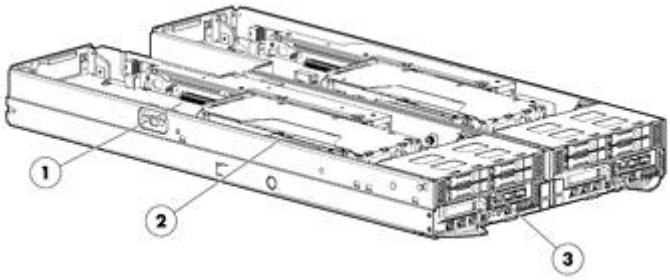

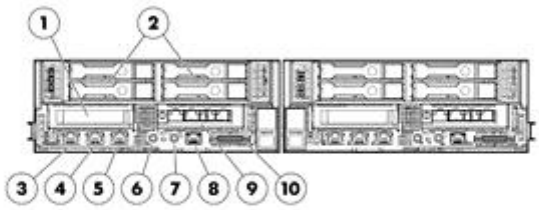

2U Open View:

1. Rear dual GPU placement. This location is also for the optional SFF 2.5" hard drive kit to enable four (4) SFF HDD's in place of the GPUs.
2. Single GPU riser mounts and underneath is Support for two Intel® Xeon® E5-2600 sequence processors and 16 memory slots. This location is also for the optional SFF 2.5" hard drive kit to enable four (4) SFF HDD's in place of the GPUs
3. FlexibleLOM networking option slot

2U Front View:

1. PCIe Expansion slot
2. Four Hot-Plug Drive Slots
3. Dedicated iLO4 Management Port
4. (1) 1GbE Ports
5. (1) 1GbE Ports
6. Power Button
7. Health LED
8. UID LED
9. Serial Port
10. SUV (Serial/USB/Video)

What's New

- Updated information pertaining to availability of various options

Standard Features

NOTE: For the Standard Features shipped in the Factory Integrated Models, please see the "Configuration Information - Factory Integrated Models" section.

Processor
One of the following depending on Model

E5-2600 v2 series Processors

Entry Processors
NOTE: All support up to 1333MHz DDR3 memory speeds.
Intel® Xeon® E5-2609 v2 (2.5GHz/4-core/10MB/6.4GT-s QPI/80W)
Base Processors
NOTE: All support up to1600MHz DDR3 memory speeds.

Intel® Xeon® E5-2630 v2 (2.6GHz/6-core/15MB/7.2GT-s QPI/80W, DDR3-1600, HT, Turbo2-3/3/3/3/4/5)

Intel® Xeon® E5-2650L v2 (1.7GHz/10-core/25MB/8.0GT-s QPI/70W, DDR3-1600, HT, Turbo2-2/2/2/2/2/2/2/2/3/4)

Performance Processors
NOTE: For 115W CPU support, customers must use the HP 1500W Common Slot Platinum Plus Hot Plug Power Supply Kit (684532-B21).
NOTE: All support up to 1866MHz DDR3 memory speeds.

Intel® Xeon® E5-2695 v2 (2.4GHz/12-core/30MB/8.0GT-s QPI/115W, DDR3-1866, HT, Turbo2-4/4/4/4/4/4/4/4/5/6/7/8)

Intel® Xeon® E5-2680 v2 (2.8GHz/10-core/25MB/8.0GT-s QPI/115W, DDR3-1866, HT, Turbo2-3/3/3/3/3/4/5/6/7/8)

Intel® Xeon® E5-2670 v2 (2.5GHz/10-core/25MB/8.0GT-s QPI/115W, DDR3-1866, HT, Turbo2-4/4/4/4/4/4/5/6/7/8)

Intel® Xeon® E5-2660 v2 (2.2GHz/10-core/25MB/8.0GT-s QPI/95W, DDR3-1866, HT, Turbo2-4/4/4/4/4/4/5/6/7/8)

Intel® Xeon® E5-2650 v2 (2.6GHz/8-core/20MB/8.0GT-s QPI/95W, DDR3-1866, HT, Turbo2-4/4/4/4/5/6/7/8)

E5-2600 series Processors

Entry Processors
NOTE: All support up to 1066MHz memory speeds.

Intel® Xeon® E5-2609 (2.4GHz/4-core/10MB/6.4GT-s QPI/80W)

Intel® Xeon® E5-2603 (1.8GHz/4-core/10MB/6.4GT-s QPI/80W)

Base Processors
NOTE: All support up to1333MHz DDR3 memory speeds.

Intel® Xeon® E5-2640 (2.5GHz/6-core/15MB/7.2GT-s QPI/95W, DDR3-1333, HT, Turbo2- 3/3/4/4/5/5)

Intel® Xeon® E5-2630 (2.3GHz/6-core/15MB/7.2GT-s QPI/95W, DDR3-1333, HT, Turbo2- 3/3/4/4/5/5)

Intel® Xeon® E5-2620 (2.0GHz/6-core/15MB/7.2GT-s QPI/95W, DDR3-1333, HT, Turbo2- 3/3/4/4/5/5)

Intel® Xeon® E5-2630L (2.0GHz/6-core/15MB/8.0GT-s QPI/60W, DDR3-1333, HT, Turbo2-3/3/4/4/5/5)

Performance Processors
NOTE: For 130W CPU support and configuration, please contact your HP account team.
NOTE: For 115W CPU support, customers must use the HP 1500W Common Slot Platinum Plus Hot Plug Power Supply Kit (684532-B21).
NOTE: All support up to 1600MHz DDR3 memory speeds.

Intel® Xeon® E5-2670 (2.6GHz/8-core/20MB/8.0GT-s QPI/115W, DDR3-1600, HT, Turbo2-

Standard Features

	4/4/5/5/6/6/7/7) Intel® Xeon® E5-2665 (2.4GHz/8-core/20MB/8.0GT-s QPI/115W, DDR3-1600, HT, Turbo2- 4/4/5/5/6/6/7/7) Intel® Xeon® E5-2660 (2.2GHz/8-core/20MB/8.0GT-s QPI/95W, DDR3-1600, HT, Turbo2- 5/5/6/6/7/7/8/8) Intel® Xeon® E5-2650 (2.0GHz/8-core/20MB/8.0GT-s QPI/95W, DDR3-1600, HT, Turbo2- 4/4/5/5/5/7/8/8) Intel® Xeon® E5-2650L (1.8GHz/8-core/20MB/8.0GT-s QPI/70W, DDR3-1600, HT, Turbo2- 2/2/3/3/4/4/5/5) Intel® Xeon® E5-2637 (3.0GHz/2-core/5MB/8.0GT-s QPI/80W, DDR3-1600, HT, Turbo2- 5/5) **NOTE:** HT indicates that the processor model supports Intel® Hyper-Threading Technology. **NOTE:** Turbo indicates the maximum potential frequency increment when using Intel® Turbo Boost Technology, with 8, 7, 6, 5, 4, 3, 2 or 1 core(s) active. **NOTE:** DDR3 speed is the maximum memory speed of the processor. Actual memory speed may depend on the quantity and type of DIMMs installed. **NOTE:** Up to 2 processors supported. Mixing different processor models is not supported. **NOTE:** For the Intel® C600 Chipset E5-2600 Series, the letter preceding the model number indicates the Product Line (E3, E5, E7); 2600x, 2 = number of CPUs in a Node, 6 is socket/segment designation, 00 = Processor SKU, and x = L for low power SKUs.
Cache Memory One of the following depending on Model	30MB (1x30MB) Level 3 **NOTE:** For Twelve-core processors. 25MB (1x25MB) Level 3 **NOTE:** For Ten-core processors. 20MB (1x20MB) Level 3 **NOTE:** For Eight-core processors. 15MB (1x15MB) Level 3 **NOTE:** For Six-core processors. 10MB (1x10MB) Level 3 **NOTE:** For Quad-core processors. 5MB (1x5MB) Level 3 **NOTE:** For Dual-core processors.
Chipset	Intel® E5-2600 Processor FamilyIntel® E5-2600 Processor Family Intel® E5-2600v2 Processor FamilyIntel® E5-2600 Processor Family **NOTE:** For more information regarding Intel® chipsets, please see the following URL: http://www.intel.com/products/server/chipsets/.Intel® E5-2600v2 Processor Family **NOTE:** For more information regarding Intel® chipsets, please see the following URL: http://www.intel.com/products/server/chipsets/.
Upgradeability	Upgradeable to two processors
On System Management Processor	HP iLO (Firmware: HP iLO 4) **NOTE:** For more information, visit: http://www.hp.com/go/ilo.
Memory Protection	Advanced ECC (multi-bit error protection)
Memory	Type: HP SmartMemory DDR3 Registered (RDIMM), Unbuffered (UDIMM) DIMM Slots Available: 16 total DIMM Slots available

Standard Features

Maximum (RDIMM) (per server tray)	256GB (16 x 16GB) Registered memory configurations
Maximum (UDIMM) (per server tray)	128GB (16 x 8GB) Unbuffered memory configurations
Maximum (LRDIMM) (per server tray)	512GB (16 x 32GB) LRDIMM memory configurations

NOTE: HP memory from previous generation servers are not qualified or warranted with this HP ProLiant Server. HP SmartMemory is required to realize the memory performance improvements and enhanced functionality listed in this document for Gen8. For additional information, please see the HP SmartMemory QuickSpecs at: http://h18000.www1.hp.com/products/quickspecs/14225_div/14225_div.html
NOTE: RDIMM, LRDIMM, and UDIMMs are all distinct memory technologies and cannot be mixed within a server. The majority of ProLiant Gen8 servers support RDIMM, LRDIMM, and UDIMM.
NOTE: HP certified SmartMemory must be used to guarantee full 1866MHz speeds.
NOTE: Depending on the memory configuration and processor model, the memory speed may run at 1866MHz, 1600MHz, 1333MHz, or 1066MHz. Please see the Online Memory Configuration Tool at: http://www.hp.com/go/ddr3memory-configurator.
NOTE: Kits described as LP include Low Power DIMMs. For more information on ProLiant Energy Efficient Features, see: http://www.hp.com/go/proliant-energy-efficient.

Network Controller

HP Ethernet 1Gb 2-port 361i

Expansion Slots

Expansion Slots #	Technology	Bus Width*	Connector Width	Form Factor	Notes
Low Profile	PCIe 3.0	x8	x8	Half-length, half-height	Front Panel Access

Expansion Slots #	Technology	Bus Width*	Connector Width	Form Factor	Notes
FlexibleLOM	PCIe 3.0	x16	x16	FlexibleLOM	Front Panel Access
GPU1 rear bottom	PCIe 3.0	x16	x16	Full-length, full height	GPU only
GPU2 rear top	PCIe 3.0	x16	x16	Full-length, full height	GPU only
GPU3 front top	PCIe 3.0	x16	x16	Full-length, full height	GPU only

*Indicates the number of physical electrical lanes running to the connector

HP Server ROM

HP ROM (Read Only Memory) is now digitally signed using HP's Corporate Signing Service. This signature is verified before the flash process starts, reducing accidental programming and preventing malicious efforts to corrupt system ROM.

HP ROM provides for essential initialization and validation of hardware components before control is passed to the customer-installed operating system. The ROM also provides the capability of booting from various fixed media (HDD, CD-ROM) and removable media (USB), to continue operation to the operating system.

HP ROM performs very early configuration of the video controller, to allow monitoring of initialization progress via an attached monitor. If configuration or hardware errors are discovered during this early phase of hardware initialization, suitable messages are now displayed on the connected monitor. Additionally, these configuration or hardware errors are logged to the Integrated Management Log

Standard Features

	(IML) to assist in diagnosis. HP's ProLiant ROM is used to configure the following: • Processor and chipset status registers • System memory, memory map, and memory initialization • System hardware configuration (Integrated PCI devices and optional PCIe cards). • Customer-specific BIOS configuration (using the HP ROM-Based Setup Utility (RBSU). **NOTE:** For further information, please refer to HP's RBSU (ROM based setup utility) user guide: http://www.hp.com/support/rbsu.		
Storage Controller	HP H220i Host Bus Adapter (B320i Dynamic Smart Array with FW update)		
Internal Storage Devices	Diskette Drives	Via USB through the SUV port, external support only	
	Optical Drives	Via USB through the SUV port, external support only	
	Hard Drives	None ship standard	
Maximum Internal Storage	**2U Half Width tray**		
	Hot Plug SAS SFF	4.8TB	4 x 1.2TB
	Hot Plug SATA SFF	4.0TB	4 x 1TB
	Hot Plug SAS SSD SFF	3.2TB	4 x 800GB
	Hot Plug SATA SSD SFF	3.2TB	4 x 800GB
	Quick Release SAS SFF	4.8TB	4 x 1.2TB
	Quick Release SATA SFF	4.0TB	4 x 1TB
	Quick Release SSD SAS SFF	2.4TB	4 x 600GB
	NOTE: The Non-Hot Plug Quick Release drives can only be used when implementing the internal SFF kit and not implementing the GPUs **NOTE:** The SL250 SFF Internal Enablement Kit (PN: 679991-B21) allows for up to four SFF HDD to be implemented in place of the three GPUs.		
Interfaces	Network RJ-45	Two 1GbE or 10GbE NIC ports	
	FlexibleLOM	ProLiant Gen8 servers offer a new networking technology - Flexible Network Technology. The SL250 Gen8 server offers the customer the choice of 1Gigabit, 10Gigabit or InfiniBand FlexibleLOM solutions depending on workload. For further details on the choices, see FlexibleLOM in the Networking Section of this document.	
	KVM	Serial USB Video Port (SUV)	
	Micro SD	1 (internal)	
	USB Ports	1 (internal)	
	HP iLO Remote Management Network Port	1 Gb Dedicated	
	Health LED	1 front	
	Power	1 front	
	UID	1 front	
Industry Standard	ACPI 2.0b Compliant		

Standard Features

Compliance	PCIe 3.0 Compliant WOL Support Microsoft® Logo certifications PXE Support USB 1.1 and 2.0 Compliant SMBIOS 2.6.1
Server Power Cords	One 6' Highline (IEC-IEC) power cord ships standard **NOTE:** HP ProLiant SL servers are primarily connected to PDU's in data center racks so they ship standard with only a PDU power cord (416151-B21). If a user wishes to power a ProLiant SL server using a 110V receptacle (NEMA-15), the NEMA power cord must be ordered separately. **NOTE:** If customers require a local power cord, they can check the power cord matrix for the appropriate cord. Please see the following power cord matrix: http://www.hp.com/go/powercordmatrix.
Power Specifications	To review typical system power ratings use the HP Power Advisor which is available via the online tool located at URL: http://www.hp.com/go/proliant-energy-efficient or http://www.hp.com/go/hppoweradvisor. **NOTE:** Power Specification and Technical Content for supported power supplies can be found at: http://h18000.www1.hp.com/products/quickspecs/14209_div/14209_div.html
Common Slot Power Supplies	**NOTE:** Mixing of power supplies in the same server is not supported. All power supplies inside a server must be exactly the same model. Mixing Gold, Platinum, and Platinum Plus certified power supplies is not supported. HP's Common Slot (CS) power supplies allow for commonality of power supplies across a wide range of ProLiant and Integrity servers, as well as HP Storage solutions, and are designed to provide the highest power supply efficiency without degrading system performance. HP CS power supplies are tested by the Electric Power Research Institute (EPRI) and certified through the ECOS 80 Plus power supply program. HP CS power supply options provide efficiency ratings of up to 94% (80 Plus Platinum) and are available in three power output options - 750W, 1200Wand 1500W - allowing the customer to "right-size" a power supply for their specific server configuration. All HP Common Slot power sources are UL, CE Mark Compliant, hot-plug and support redundant configurations. **NOTE:** Mixing of power supplies in the same server is not supported. All power supplies must be of the same output and efficiency rating. If non-matched power supplies are inserted you will get errors and operation will fail. It is highly recommended that you use the HP Power Advisor in defining the "Right-Size" power supply for your needs. HP Power Advisor can be accessed at: http://www.hp.com/go/hppoweradvisor. **NOTE:** The 80 PLUS program is a unique forum that unites electric utilities, the computer industry, and consumers in an effort to bring energy efficient technology solutions to the marketplace. 80 Plus independently tests power supply efficiency and publicly posts the results on 80Plus.org. Redundant Power: Optional (1+ 1 or n+n redundant) power supplies can be purchased through power supply option kits (see Power Supplies for part numbers). **NOTE:** Power Specification and Technical Content for supported power supplies can be found at: http://h18000.www1.hp.com/products/quickspecs/14209_div/14209_div.html

Standard Features

System Fans

HP s6500 Redundant Fan Kit
NOTE: This kit includes only 1 fan, but the chassis requires 8 fans
NOTE: This selection must be ordered in quantities of 8 (PN 617856-B21)

HP s6500 Non-Redundant Fan Kit
NOTE: This kit includes only 1 fan, but the chassis requires 8 fans
NOTE: This selection must be ordered in quantities of 8 (PN 617858-B21)

NOTE: All 8 fan bays must be populated with either redundant or non-redundant fans
NOTE: Mixing and matching of fan-types is not allowed

Operating Systems and Virtualization Software Support for ProLiant Servers

Microsoft Windows Server
Canonical Ubuntu
Red Hat Enterprise Linux (RHEL)
SUSE Linux Enterprise Server (SLES)
VMware
Citrix XenServer

NOTE: For more information on HP's Certified and Supported ProLiant Servers for OS and Virtualization Software and latest listing of software drivers available for your server including how to purchase from HP, please visit our OS Support Site at: http://www.hp.com/go/ossupport and our driver download page: http://www.hp.com/support/SL250sGen8

Graphics

Integrated Matrox G200 video standard

- 1280 x 1024 (32 bpp)
- 1920 x 1200 (16 bpp)

HP iLO 4 On System Management Memory

- 16 MB Flash
- 256 MB DDR 3 with ECC (112 MB after ECC and video)

Form Factor

Fully configured SL250 is 2U, half-width

Fully configured SL6500 chassis is 4U, full-width

On System Management

HP iLO Management Engine

HP iLO Management Engine is a comprehensive set of embedded management features supporting the complete lifecycle of the server, from initial deployment, through ongoing management, to service alerting and remote support. HP iLO Management Engine comes standard on all HP ProLiant Gen8 servers. The HP iLO Management Engine portfolio includes:

- **HP iLO:** The HP iLO (Integrated Lights-Out) management processor is the core foundation for the HP iLO Management Engine
- **HP Agentless Management:** Provides built in server health monitoring and alerting capability without OS agents, that starts working the moment a power cord and an Ethernet cable are connected.
- **HP Active Health System:** Always on, continuous monitoring for increased stability and shorter downtimes; 100% configuration history; Health and service alerts and easy export and upload to Service and Support.
- **HP Intelligent Provisioning:** Lets customers provision and configure a single server without any separate media. No more

SmartStart CDs or Smart Update Firmware DVD are needed.
    - To start Intelligent Provisioning:
        - Press the F10 key during the ProLiant Gen8 server boot process (also known as power on self test or POST).
        - Please go to the Intelligent Provisioning website at http://www.hp.com/go/intelligentprovisioning for additional information and to view usage videos.
        - Use the Service Pack for ProLiant (SPP) at http://www.hp.com/go/spp to get firmware and software updates.
- **HP iLO Mobile App:** Enables the ability to access, deploy, and manage your server anytime from anywhere from select smartphones and mobile devices. For additional information please visit: http://www.hp.com/go/ilo/mobileapp

NOTE: For more information, visit: http://www.hp.com/go/ilo or HP iLO Management Engine technologies whitepaper

HP Insight management	HP Service Pack for ProLiant (SPP)	HP Service Pack for ProLiant (SPP) and HP Smart Update Manager (HP SUM) provide a comprehensive approach to firmware and system software maintenance. Together they provide better operating stability and ensure maximum uptime. The SPP will be updated at a predictable cadence, typically coinciding with new HP server hardware launches. By enabling firmware to be updated online and integrating firmware and system software updates in one operation, HP SUM and the SPP offer faster updates of individual servers and dramatically faster updates of entire BladeSystem enclosures. Further improving system uptime and stability is the fact that HP provides 12 months of support for each Service Pack for ProLiant release. The user experience around HP SUM and the SPP has been improved in several ways, starting with the web download. A single web page provides access to a single download containing both the latest version of HP SUM and the latest SPP. Optional smaller subsets with only specific types of servers or specific operating systems are offered to save on download time. The HP SUM application provides a straightforward, intuitive user interface that guides the user through the steps of discovery, analyses and update, providing comprehensive information on available updates, criticality and interdependencies. This information is also available in reports. By providing the option of multiple local or shared repositories which can be easily updated from hp.com, HP SUM provides the tools to optimize stability and consistency throughout the company. While HP SUM and the SPP recommend the combinations of firmware and system software that HP has found to be the best practice, the application gives customers the flexibility to set their own specific baseline. The Service Pack for ProLiant has been rigorously tested with specific attention for interaction between firmware, drivers and agents both within the server as well as in interaction with the BladeSystem enclosure components (Onboard Administrator and Virtual Connect). This testing ensures the highest quality as well as providing the input for HP SUM to deploy updates taking into account all interdependencies, when determining

Standard Features

	the correct updates and order of update deployment. **NOTE:** The Service Pack for ProLiant (which includes HP SUM) can be downloaded from http://www.hp.com/go/spp/download. More information can be found: http://www.hp.com/go/SmartUpdate, http://www.hp.com/go/spp and http://www.hp.com/go/hpsum
Security	Power-on password Keyboard password QuickLock, Network Server Mode Serial interface control Administrator's password iLO 4 (Integrated Lights-Out 4) has 12 customizable user accounts and SSL encryption iLO 4 can be disabled via a Global Setting iLO Advanced supports directory services integration
Warranty	This product is covered by a global limited warranty and supported by HP Services and a worldwide network of HP Authorized Channel Partners. Hardware diagnostic support and repair is available for one year from date of purchase. Support for software and initial setup is available for 90 days from date of purchase. Enhancements to warranty services are available through HP Care Pack services or customized service agreements. Hard drives have either a one year or three year warranty. **NOTE:** Server Warranty includes 1 year Parts, 1 year Labor, 1-year on-site support with next business day response. Warranty repairs may be accomplished through the use of Customer Self Repair (CSR) parts. These parts fall into two categories: 1) Mandatory CSR parts are designed for easy replacement. A travel and labor charge will result when customers decline to replace a Mandatory CSR part; 2) Optional CSR parts are also designed for easy replacement but may involve added complexity. Customers may choose to have HP replace Optional CSR parts at no charge. Additional information regarding worldwide limited warranty and technical support is available at: http://h18004.www1.hp.com/products/servers/platforms/warranty/index.html.

Optional Features

HP Insight management	HP Insight Control	HP Insight Control, a product option, delivers essential infrastructure management that can help save time and money by making it easy to deploy, migrate, monitor, remote control, and optimize your IT infrastructure through a single, simple management console. For more information, see http://www.hp.com/go/insightcontrol. HP Insight Control includes one year of 24 x 7 HP Software Technical Support and Update Service ensuring rapid access to HP support staff and proactive delivery of software updates. For more information about this service, see: http://www.hp.com/services/insight.
	HP Matrix Operating Environment	The HP Matrix Operating Environment (Matrix OE) for ProLiant and Integrity servers is an integrated command center that helps you instantly adjust to dynamic business demands. This advanced infrastructure management software lets you reduce the cost of common data center tasks by up to 40 percent while keeping pace with your changing business. The HP Matrix OE includes the automated provisioning, optimization, and recovery management capabilities for HP CloudSystem Matrix, the ideal platform for private cloud and Infrastructure as a Service (IaaS). **NOTE:** For more information, visit: http://www.hp.com/go/matrixoe
	HP iLO Advanced	HP Integrated Lights-Out Advanced License a product option, providing smart remote server management without compromise. iLO Advanced unlocks the full set of remote administration functionality for all HP ProLiant servers by activating the full Virtual Keyboard Video and Mouse remote console, multi-user collaboration, console record and replay, GUI-based and scripted virtual media and virtual folders, and enhanced security and power management functionality. For more information, see: http://www.hp.com/go/iloadvance
	HP iLO Scale-Out	HP iLO Scale Out offers, Remote Serial Console (text-based video re-direction via SSH), email-based alerting, remote system log, serial record/playback and power management capabilities. These features can significantly assist customers purchasing "SL" series to manage their servers. It is ideal for the web hosting/cloud service providers, High Performance Computing and Scale-Out businesses. If customers require more advanced features such as graphical remote console, multi-user collaboration, and video record/playback they can purchase HP iLO Advanced.
	HP Matrix Operating Environment	The HP Matrix Operating Environment (Matrix OE) for ProLiant and Integrity servers is an integrated command center that helps you instantly adjust to dynamic business demands. This advanced infrastructure management software lets you reduce the cost of common data center tasks by up to 40 percent while keeping pace with your changing business. The HP Matrix OE includes the automated provisioning, optimization, and recovery management capabilities for HP CloudSystem Matrix, the ideal platform for private cloud and Infrastructure as a Service (IaaS). **NOTE:** For more information, visit: http://www.hp.com/go/matrixoe
High Performance	HP Cluster Platforms	HP Cluster Platforms are specifically engineered, factory-integrated large-

Optional Features

Clusters		scale ProLiant clusters optimized for High Performance Computing, with a choice of servers, networks and software. Operating system options include specially priced offerings for Red Hat Enterprise Linux and SUSE Linux Enterprise Server, as well as Microsoft Windows HPC Server. A Cluster Platform Configurator simplifies ordering. http://www.hp.com/go/clusters
	HP HPC Interconnects	High Performance Computing (HPC) interconnect technologies are available for this server as part of the HP Cluster Platform portfolio. These high-speed InfiniBand and Gigabit interconnects are fully supported by HP when integrated within an HP cluster. Flexible, validated solutions can be defined with the help of configuration tools. http://www.hp.com/techservers/clusters/ucp/index.html
	HP Insight Cluster Management Utility	HP Insight Cluster Management Utility (CMU) is an HP-licensed and HP-supported suite of tools that are used for lifecycle management of hyperscale clusters of Linux ProLiant systems. CMU includes software for the centralized provisioning, management and monitoring of nodes. CMU makes the administration of clusters user friendly, efficient, and effective. http://www.hp.com/go/cmu

Storage Software

Whether you need to solve a specific data protection, archiving, or storage command and control challenge, or deliver on strategic consolidation, compliance, or continuity initiatives, look no further than HP storage software. Our storage software helps you reduce costs, simplify storage infrastructure, protect vital assets and respond faster to business opportunities.

Storage software that gets the job done:

- **Data Protection and Recovery Software**
  Whether you're a large enterprise or a smaller business, HP data protection and recovery software will cost-effectively protect you against disaster and ensure business continuity.
- **Data Archive and Migration Software**
  HP's storage software enables you to comply with data retention and retrieval requirements, improve application performance, and reduce costs by efficiently migrating infrequently accessed or less valuable data to lower cost storage.
- **Storage Resource Management Software (SRM)**
  HP's storage resource management software reduces operational costs and provides the command and control foundation you need to efficiently manage and visualize your physical and virtual environments.
- **Data Replication Software**
  HP offers array-based and host-based replication software for use in disaster recovery, testing, application development and reporting.
- **Storage Device Management Software**
  Maximize your investment in HP storage and networking with software that enables hardware-specific configuration, performance tuning and connectivity management.
- **HP StoreVirtual VSA**
  With HP StoreVirtual VSA you can use the power of virtualization to turn a set of heterogeneous and disconnected physical disk drives in your servers and storage devices into a single pool of logical storage capacity.

NOTE: For more information available Storage Software including QuickSpecs, please see: http://www.hp.com/go/storage/software.

HP Insight Online

HP Insight Online is a new addition to the HP Support Center for one stop, secure access to product and HP support information personalized to your IT environment. Insight Online can automatically display devices remotely monitored by HP Insight Remote Support. With Insight Online's easy navigation you can efficiently track your IT support contracts and device status from anywhere and at anytime.

Optional Features

http://www.hp.com/go/insightonline

Factory Express Portfolio for Servers and Storage	HP Factory Express offers configuration, customization, integration and deployment services for HP servers and storage products. Customers can choose how their factory solutions are built, tested, integrated, shipped and deployed. Factory Express offers service packages for simple configuration, racking, installation, complex configuration and design services as well as individual factory services, such as image loading, asset tagging, and custom packaging. HP products supported through Factory Express include a wide array of servers and storage: HP Integrity, HP ProLiant, HP ProLiant Server Blades, HP BladeSystem, HP 9000 servers as well as the MSAxxxx, VA7xxx, EVA, XP, rackable tape libraries and configurable network switches. For more information on Factory Express services for your specific server model please contact your sales representative or go to: http://www.hp.com/go/factory-express.
HP Simple Configurator	SCE is a guided self service tool to help sales and non technical people provide customers with initial configurations in 3 to 5 minutes. You may then send the configuration on for configuration help, or use in your existing ordering processes. If you require "custom" rack configuration or configuration for products not available in SCE, please contact HP's Customer Business Center or an Authorized Partner for assistance. http://www.hp.com/products/configurator
Computational and Graphics Accelerators	Each SL250s tray will accommodate up to three computational or graphics accelerators, with options including NVIDIA Tesla K20, K20x and K40 GPUs, NVIDIA GRID K2 GPUs, and Intel® Xeon Phi™ 5110p and Intel® Xeon Phi™ 7120p Coprocessors. **NOTE:** Each SL250s tray will accommodate up to three accelerators. For 3 accelerators, at least three (3) HP 1500W Common Slot Platinum Plus Hot Plug Power Supply Kits (684532-B21) must be used. For 1-2 accelerators, either three of the 1500W or four of the HP 1200W Common Slot Platinum Plus Hot Plug Power Supply Kit (578322-B21) must be used. **NOTE:** The maximum number of NVIDIA Tesla K20, K20x and K40 GPUs, NVIDIA GRID K2, and Intel® Xeon Phi™ 5110p coprocessors supported is 3. The maximum number of Intel® Xeon PhiTM 7120p coprocessors is 2. **NOTE:** One must configure a minimum of 4GB of memory per processor when accelerators are installed. **NOTE:** Mixing of accelerators or coprocessors within the same server is not allowed. **NOTE:** At this time, the NVIDIA Tesla K40 is operated at PCIe Gen2. **NOTE:** The NVIDIA Tesla K40 is only supported on E5-2600v2 processors.

Service and Support

Service and Support	**The SL250s tray is a part of the HP ProLiant s6500 Chassis. Support for these tray need to be purchased at a chassis level. Please refer to HP ProLiant s6500 Chassis quick spec documentation for details.** **HP Technology Services for Industry Standard Servers** HP Technology Services delivers confidence, reduces risk and helps customers realize agility and stability. Connect to HP to help prevent problems and solve issues faster. Our support technology lets you to tap into the knowledge of millions of devices and thousands of experts to stay informed and in control, anywhere, any time. **Protect your business beyond warranty with HP Care Pack Services** HP Care Pack Services enable you to order the right service level, length of coverage and response time as you purchase your new server, giving you full entitlement for the term you select.
Get connected to HP to improve your support experience	Prevent problems with innovative, automated monitoring tools and proactive services. Combining Proactive Care Services with our remote support technology such as Insight Online provides you with expert advice and personalized, cloud-based automated IT support, helping to prevent unplanned down time and solve problems quickly. For more information, visit: http://www.hp.com/go/proactiveinsightexperience
Warranty / Service Coverage	For ProLiant servers and storage systems, the services cover HP-branded hardware options qualified for the server, purchased at the same time or afterward, internal to the enclosure, as well as external monitors up to 22" and tower UPS products; these items will be covered at the same service level and for the same coverage period as the server unless the maximum supported lifetime and/or the maximum usage limitation has been exceeded. Coverage of the UPS battery is not included; standard warranty terms and conditions apply. The defective media retention service feature option applies only to Disk or eligible SSD/Flash Drives replaced by HP due to malfunction. It does not apply to any exchange of Disk or SSD/Flash Drives that have not failed. SSD/Flash Drives that are specified by HP as consumable parts and/or that have exceeded maximum supported lifetime and/or the maximum usage limit as set forth in the manufacturer's operating manual or the technical data sheet are not eligible for the defective media retention service feature option.
For more information	To learn more on HP ProLiant servers and HP BladeSystem servers, please contact your HP sales representative or HP Authorized Channel Partner. Or visit: http://www.hp.com/services/proliant

Configuration Information - Factory Integrated Models

NOTE: This section lists some of the steps required to configure a Factory Integrated Model. To ensure only valid configurations are ordered, HP recommends the use of an HP approved configurator. Contact your local sales representative for information on configurable product offerings and requirements.
NOTE: Configure-to-order (CTO) servers must start with a CTO Chassis.
NOTE: FIO indicates that this option is only available as a factory installable option.
NOTE: If you already have an s6500 chassis skip to Step 1A.
NOTE: s6500 Chassis cannot have a mix of SL270s and SL250s and/or SL230s due to different Carbondale (CD) FW versions. You will be unable to order such a configuration. SL250s and SL230s can be intermixed in an s6500 chassis because they possess the same Carbondale (CD) FW versions, but one that differs from SL270s. This rule does not apply to any combination of servers with Ivy Bridge processors, the Carbondale version in those processors is the same.

Step 1: Base Configuration (choose one from each list unless otherwise noted)

HP Chassis	HP ProLiant s6500 without Fans 4U Configure-to-order Chassis **NOTE:** You must choose Power Supplies and fans as the chassis does not include them. **NOTE:** If you already have an s6500 chassis you can buy server trays below.	614167-B21

Step 2: Select Nodes

NOTE: Mixing and matching of half width trays is supported in the s6500 chassis.
NOTE: If you do not fill up chassis with servers, the HP node blank Kit (688928-B21 for left and 688930-B21 for right) needs to be ordered for each half width 1U space unpopulated.

HP Server Nodes	**NOTE:** The following SKUs are compatible with E5-2600 series processors.	
	HP ProLiant SL250s Gen8 2U PCIe Gen3 Left Tray Configure-to-order Svr	698723-B21
	HP ProLiant SL250s Gen8 2U PCIe Gen3 Right Tray Configure-to-order Svr	698724-B21
	NOTE: The following SKUs are compatible with E5-2600v2 series processors.	
	HP ProLiant SL250s Gen8 E5-v2 Left Tray Configure-to-order Server	750349-B21
	HP ProLiant SL250s Gen8 E5-v2 Right Tray Configure-to-order Server	750350-B21

Step 3: Choose Required Node Options (only one of the following from each list unless otherwise noted)

HP Processors	**NOTE:** If 2 processors are desired, select one xxxxx-L21 and one xxxxxx-B21	
	E5-2600v2 Series Processors	
	Entry Processors **NOTE:** All support up to 1333MHz memory speeds.	
	HP SL2x0s Gen8 Intel® Xeon® E5-2609v2 (2.5GHz/4-core/10MB/80W) FIO Processor Kit	725942-L21
	Base Processors **NOTE:** All support up to1600MHz DDR3 memory speeds.	
	HP SL2x0s Gen8 Intel® Xeon® E5-2630v2 (2.6GHz/6-core/15MB/80W) FIO Processor Kit	725941-L21
	HP SL2x0s Gen8 Intel® Xeon® E5-2650Lv2 (1.7GHz/10-core/25MB/70W) FIO Processor Kit	725943-L21
	Performance Processors **NOTE:** For 130W CPU support and configuration, please contact your HP account team. **NOTE:** For 115W CPU support, customers must use the HP 1500W Common Slot Platinum Plus Hot Plug Power Supply Kit (684532-B21).	

NOTE: All support up to 1866MHz DDR3 memory speeds

HP SL2x0s Gen8 Intel® Xeon® E5-2695v2 (2.4GHz/12-core/30MB/115W) FIO Processor Kit	725944-L21
HP SL2x0s Gen8 Intel® Xeon® E5-2680v2 (2.8GHz/10-core/25MB/115W) FIO Processor Kit	725937-L21
HP SL2x0s Gen8 Intel® Xeon® E5-2670v2 (2.5GHz/10-core/25MB/115W) FIO Processor Kit	725938-L21
HP SL2x0s Gen8 Intel® Xeon® E5-2660v2 (2.2GHz/10-core/25MB/95W) FIO Processor Kit	725939-L21
HP SL2x0s Gen8 Intel® Xeon® E5-2650v2 (2.6GHz/8-core/20MB/95W) FIO Processor Kit	725940-L21

E5-2600 Series Processors

Entry Processors

NOTE: All support up to 1066MHz memory speeds.

HP SL250s Gen8 Intel® Xeon® E5-2609 (2.4GHz/4-core/10MB/80W) FIO Processor Kit	662326-L21
HP SL250s Gen8 Intel® Xeon® E5-2603 (1.8GHz/4-core/10MB/80W) FIO Processor Kit	662327-L21

Base Processors

NOTE: All support up to1333MHz DDR3 memory speeds.

HP SL250s Gen8 Intel® Xeon® E5-2640 (2.5GHz/6-core/15MB/95W) FIO Processor Kit	662323-L21
HP SL250s Gen8 Intel® Xeon® E5-2630 (2.3GHz/6-core/15MB/95W) FIO Processor Kit	662324-L21
HP SL250s Gen8 Intel® Xeon® E5-2620 (2.GHz/6-core/15MB/95W) FIO Processor Kit	662325-L21
HP SL250s Gen8 Intel® Xeon® E5-2630L (2.0GHz/6-core/15MB/60W) FIO Processor Kit	662332-L21

Performance Processors

NOTE: For 130W CPU support and configuration, please contact your HP account team.

NOTE: For 115W CPU support, customers must use the HP 1500W Common Slot Platinum Plus Hot Plug Power Supply Kit (684532-B21).

HP SL250s Gen8 Intel® Xeon® E5-2670 (2.6GHz/8-core/20MB/115W) FIO Processor Kit	662319-L21
HP SL250s Gen8 Intel® Xeon® E5-2665 (2.4GHz/8-core/20MB/115W) FIO Processor Kit	662320-L21
HP SL250s Gen8 Intel® Xeon® E5-2660 (2.2GHz/8-core/20MB/95W) FIO Processor Kit	662321-L21
HP SL250s Gen8 Intel® Xeon® E5-2650 (2.0GHz/8-core/20MB/95W) FIO Processor Kit	662322-L21
HP SL250s Gen8 Intel® Xeon® E5-2650L (1.8GHz/8-core/20MB/70W) FIO Processor Kit	662331-L21
HP SL250s Gen8 Intel® Xeon® E5-2637 (3.0GHz/2-core/5MB/80W) FIO Processor Kit	662330-L21

HP Memory

NOTE: HP memory from previous generation servers are not qualified or warranted with this HP ProLiant Server. HP SmartMemory is required to realize the memory

performance improvements and enhanced functionality listed in this document for Gen8. For additional information, please see the HP SmartMemory QuickSpecs at: http://h18000.www1.hp.com/products/quickspecs/14225_div/14225_div.html
NOTE: LRDIMM, RDIMM, and UDIMMs are all distinct memory technologies and cannot be mixed within a server. The majority of ProLiant Gen8 servers support LRDIMM, RDIMM and UDIMMs.

Registered DIMMs (RDIMMs)
NOTE: The following memory is supported by the E5-2600 v2 series Processors.

HP 4GB (1x4GB) Single Rank x4 PC3L-12800R (DDR3-1600) Registered CAS-11 Low Voltage Memory Kit	713981-B21
HP 4GB (1x4GB) Single Rank x4 PC3-14900R (DDR3-1866) Registered CAS-13 Memory Kit	708637-B21
HP 8GB (1x8GB) Dual Rank x4 PC3L-12800R (DDR3-1600) Registered CAS-11 Low Voltage Memory Kit	713983-B21
HP 8GB (1x8GB) Single Rank x4 PC3L-12800R (DDR3-1600) Registered CAS-11 Low Voltage Memory Kit	731765-B21
HP 8GB (1x8GB) Dual Rank x4 PC3-14900R (DDR3-1866) Registered CAS-13 Memory Kit	708639-B21
HP 8GB (1x8GB) Single Rank x4 PC3-14900R (DDR3-1866) Registered CAS-13 Memory Kit	731761-B21
HP 16GB (1x16GB) Dual Rank x4 PC3L-12800R (DDR3-1600) Registered CAS-11 Low Voltage Memory Kit	713985-B21
HP 16GB (1x16GB) Dual Rank x4 PC3-14900R (DDR3-1866) Registered CAS-13 Memory Kit	708641-B21

Registered DIMMs (RDIMMs)
NOTE: The following memory is supported by the E5-2600 series Processors.

HP 4GB (1x4GB) Single Rank x4 PC3L-10600R (DDR3-1333) Registered CAS-9 Low Voltage Memory Kit	647893-B21
HP 4GB (1x4GB) Single Rank x4 PC3-12800R (DDR3-1600) Registered CAS-11 Memory Kit	647895-B21
HP 8GB (1x8GB) Dual Rank x4 PC3L-10600R (DDR3-1333) Registered CAS-9 Low Voltage Memory Kit	647897-B21
HP 8GB (1x8GB) Single Rank x4 PC3-12800R (DDR3-1600) Registered CAS-11 Memory Kit **NOTE:** 647899-B21 is supported by the E5-2600 and E5-2600v2 series Processors.	647899-B21
HP 8GB (1x8GB) Dual Rank x4 PC3-12800R (DDR3-1600) Registered CAS-11 Memory Kit	690802-B21
HP 16GB (1x16GB) Dual Rank x4 PC3L-10600R (DDR3-1333) Registered CAS-9 Low Voltage Memory Kit	647901-B21
HP 16GB (1x16GB) Dual Rank x4 PC3-12800R (DDR3-1600) Registered CAS-11 Memory Kit **NOTE:** 672631-B21 is supported by the E5-2600 and E5-2600v2 series Processors.	672631-B21

Unbuffered with ECC DIMMs (UDIMMs)
NOTE: The following memory is supported by the E5-2600 v2 series Processors.

HP 2GB (1x2GB) Single Rank x8 PC3L-12800E (DDR3-1600) Unbuffered CAS-11 Low Voltage Memory Kit	713975-B21
HP 2GB (1x2GB) Single Rank x8 PC3-14900E (DDR3-1866) Unbuffered CAS-13 Memory Kit	708631-B21

Configuration Information - Factory Integrated Models

HP 4GB (1x4GB) Dual Rank x8 PC3L-12800E (DDR3-1600) Unbuffered CAS-11 Low Voltage Memory Kit	713977-B21
HP 4GB (1x4GB) Dual Rank x8 PC3-14900E (DDR3-1866) Unbuffered CAS-13 Memory Kit	708633-B21
HP 8GB (1x8GB) Dual Rank x8 PC3L-12800E (DDR3-1600) Unbuffered CAS-11 Low Voltage Memory Kit	713979-B21
HP 8GB (1x8GB) Dual Rank x8 PC3-14900E (DDR3-1866) Unbuffered CAS-13 Memory Kit	708635-B21

Unbuffered with ECC DIMMs (UDIMMs)

NOTE: The following memory is supported by the E5-2600 series Processors.

HP 2GB (1x2GB) Single Rank x8 PC3-12800E (DDR3-1600) Unbuffered CAS-11 Memory Kit	669320-B21
HP 2GB (1x2GB) Single Rank x8 PC3L-10600E (DDR3-1333) Unbuffered CAS-9 Low Voltage Memory Kit	647905-B21
HP 4GB (1x4GB) Dual Rank x8 PC3-12800E (DDR3-1600) Unbuffered CAS-11 Memory Kit	669322-B21
HP 4GB (1x4GB) Dual Rank x8 PC3L-10600E (DDR3-1333) Unbuffered CAS-9 Low Voltage Memory Kit	647907-B21
HP 8GB (1x8GB) Dual Rank x8 PC3-12800E (DDR3-1600) Unbuffered CAS-11 Memory Kit	669324-B21
HP 8GB (1x8GB) Dual Rank x8 PC3L-10600E (DDR3-1333) Unbuffered CAS-9 Low Voltage Memory Kit	647909-B21

Load Reduced DIMMs (LRDIMMs)

HP 32GB (1x32GB) Quad Rank x4 PC3-14900L (DDR3-1866) Load Reduced CAS-13 Memory Kit **NOTE:** This memory is only supported by the E5-2600 v2 series Processors.	708643-B21
HP 32GB (1x32GB) Quad Rank x4 PC3L-10600L (DDR3-1333) Load Reduced CAS-9 Low Voltage Memory Kit **NOTE:** This memory is only supported by the E5-2600 series Processors.	647903-B21

NOTE: All DDR3 memory option kits consist of one DIMM per kit. For detailed memory configuration rules and guidelines, please use the Online DDR3 Memory Configuration Tool: http://www.hp.com/go/ddr3memory-configurator.
NOTE: Kits described as LP include Low Power DIMMs. For more information on ProLiant Energy Efficient Features, see: http://www.hp.com/go/proliant-energy-efficient
NOTE: PC3L is a low voltage memory

Step 4: Choose Additional Factory Integratable Options

HP Networking

Gigabit Ethernet Adapters

HP Ethernet 1Gb 4-port 366FLR FIO Adapter	684217-B21

FlexibleLOM Adapters

HP FlexFabric 10Gb 2-port 526FLR-SFP+ FIO Adapter	684219-B21
HP Ethernet 10Gb 2-port 560FLR-SFP+ FIO Adapter	684218-B21
HP FlexFabric 10Gb 2-port 534FLR-SFP+ FIO Adapter	700752-B21
HP FlexFabric 10Gb 2-port 533FLR-T FIO Adapter	700760-B21

NOTE: Please see the QuickSpecs for Technical Specifications and additional information: http://www.hp.com/go/ProLiantNICs

Configuration Information - Factory Integrated Models

HP Insight Software	HP Insight Control including 1yr 24x7 Support ProLiant ML/DL/BL-bundle Single Server FIO License	C6N36A
	HP Insight Control including 1yr 24x7 Support ProLiant ML/DL/BL-bundle FIO Electronic License	C6N36ABE

Step 5: Choose Other Server Options for Factory Integration

NOTE: For additional options, please refer to the "Core Options" and "Additional Options" sections below.

Core Options

NOTE: Some options may not be integrated at the factory. To ensure only valid configurations are ordered, HP recommends the use of an HP approved configurator. Contact your local sales representative for additional information.

HP Unique Options	HP SL250 SFF Internal Enablement Kit **NOTE:** The SFF HDD Internal Enablement Kit is required to be selected whenever a Quick Release SFF drive is ordered. **NOTE:** The SFF enablement kit allows up to four SFF HDD to be implemented in place of the three GPUs. **NOTE:** This SFF enablement kit will not work with the Smart Array P420 Controller (631670-B21, 631671-B21) due to cable restrictions.	679991-B21
	HP SL250 NVIDIA GPU Enablement Kit **NOTE:** Each NVidia K2/K20/K20x/K40 card requires 1 of the above enablement kits.	711947-B21
	HP SL250 Coprocessor Enablement Kit **NOTE:** Each Xeon Phi 5110p/7120p Coprocessor card requires 1 of the above enablement kits.	711949-B21
HP Processors	**NOTE:** If 2 processors are desired, select one xxxxx-B21 and one xxxxxx-B21	
	E5-2600v2 Series Processors	
	Entry Processors **NOTE:** All support up to 1333MHz memory speeds.	
	HP SL2x0s Gen8 Intel® Xeon® E5-2609v2 (2.5GHz/4-core/10MB/80W) Processor Kit	725942-B21
	Base Processors **NOTE:** All support up to1600MHz DDR3 memory speeds.	
	HP SL2x0s Gen8 Intel® Xeon® E5-2630v2 (2.6GHz/6-core/15MB/80W) Processor Kit	725941-B21
	HP SL2x0s Gen8 Intel® Xeon® E5-2650Lv2 (1.7GHz/10-core/25MB/70W) Processor Kit	725943-B21
	Performance Processors **NOTE:** For 130W CPU support and configuration, please contact your HP account team. **NOTE:** For 115W CPU support, customers must use the HP 1500W Common Slot Platinum Plus Hot Plug Power Supply Kit (684532-B21). **NOTE:** All support up to 1866MHz DDR3 memory speeds	
	HP SL2x0s Gen8 Intel® Xeon® E5-2695v2 (2.4GHz/12-core/30MB/115W) Processor Kit	725944-B21
	HP SL2x0s Gen8 Intel® Xeon® E5-2680v2 (2.8GHz/10-core/25MB/115W) Processor Kit	725937-B21
	HP SL2x0s Gen8 Intel® Xeon® E5-2670v2 (2.5GHz/10-core/25MB/115W) Processor Kit	725938-B21
	HP SL2x0s Gen8 Intel® Xeon® E5-2660v2 (2.2GHz/10-core/25MB/95W) Processor Kit	725939-B21
	HP SL2x0s Gen8 Intel® Xeon® E5-2650v2 (2.6GHz/8-core/20MB/95W) Processor Kit	725940-B21
	E5-2600 Series Processors	
	Entry Processors **NOTE:** All support up to 1066MHz memory speeds.	
	HP SL250s Gen8 Intel® Xeon® E5-2609 (2.4GHz/4-core/10MB/80W) Processor Kit	662326-B21
	HP SL250s Gen8 Intel® Xeon® E5-2603 (1.8GHz/4-core/10MB/80W) Processor Kit	662327-B21

Core Options

	Base Processors **NOTE:** All support up to1333MHz DDR3 memory speeds.	
	HP SL250s Gen8 Intel® Xeon® E5-2640 (2.5GHz/6-core/15MB/95W) Processor Kit	662323-B21
	HP SL250s Gen8 Intel® Xeon® E5-2630 (2.3GHz/6-core/15MB/95W) Processor Kit	662324-B21
	HP SL250s Gen8 Intel® Xeon® E5-2620 (2.0GHz/6-core/15MB/95W) Processor Kit	662325-B21
	HP SL250s Gen8 Intel® Xeon® E5-2630L (2.0GHz/6-core/15MB/60W) Processor Kit	662332-B21
	Performance Processors **NOTE:** For 130W CPU support and configuration, please contact your HP account team. **NOTE:** For 115W CPU support, customers must use the HP 1500W Common Slot Platinum Plus Hot Plug Power Supply Kit (684532-B21).	
	HP SL250s Gen8 Intel® Xeon® E5-2670 (2.6GHz/8-core/20MB/115W) Processor Kit	662319-B21
	HP SL250s Gen8 Intel® Xeon® E5-2665 (2.4GHz/8-core/20MB/115W) Processor Kit	662320-B21
	HP SL250s Gen8 Intel® Xeon® E5-2660 (2.2GHz/8-core/20MB/95W) Processor Kit	662321-B21
	HP SL250s Gen8 Intel® Xeon® E5-2650 (2.0GHz/8-core/20MB/95W) Processor Kit	662322-B21
	HP SL250s Gen8 Intel® Xeon® E5-2650L (1.8GHz/8-core/20MB/70W) Processor Kit	662331-B21
	HP SL250s Gen8 Intel® Xeon® E5-2637 (3.0GHz/2-core/5MB/80W) Processor Kit	662330-B21
	HP SL250s Gen8 Intel® Xeon® E5-2650 (2.0GHz/8-core/20MB/95W) Processor Kit	662322-B21
	HP SL250s Gen8 Intel® Xeon® E5-2650L (1.8GHz/8-core/20MB/70W) Processor Kit	662331-B21
HP Memory	**NOTE:** HP memory from previous generation servers are not qualified or warranted with this HP ProLiant Server. HP SmartMemory is required to realize the memory performance improvements and enhanced functionality listed in this document for Gen8. For additional information, please see the HP SmartMemory QuickSpecs at: http://h18000.www1.hp.com/products/quickspecs/14225_div/14225_div.html **NOTE:** LRDIMM, RDIMM, and UDIMMs are all distinct memory technologies and cannot be mixed within a server. The majority of ProLiant Gen8 servers support LRDIMM, RDIMM and UDIMMs.	
	Registered DIMMs (RDIMMs) **NOTE:** The following memory is supported by the E5-2600 v2 series Processors.	
	HP 4GB (1x4GB) Single Rank x4 PC3L-12800R (DDR3-1600) Registered CAS-11 Low Voltage Memory Kit	713981-B21
	HP 4GB (1x4GB) Single Rank x4 PC3-14900R (DDR3-1866) Registered CAS-13 Memory Kit	708637-B21
	HP 8GB (1x8GB) Dual Rank x4 PC3L-12800R (DDR3-1600) Registered CAS-11 Low Voltage Memory Kit	713983-B21
	HP 8GB (1x8GB) Single Rank x4 PC3L-12800R (DDR3-1600) Registered CAS-11 Low Voltage Memory Kit	731765-B21
	HP 8GB (1x8GB) Dual Rank x4 PC3-14900R (DDR3-1866) Registered CAS-13 Memory Kit	708639-B21
	HP 8GB (1x8GB) Single Rank x4 PC3-14900R (DDR3-1866) Registered CAS-13 Memory Kit	731761-B21
	HP 16GB (1x16GB) Dual Rank x4 PC3L-12800R (DDR3-1600) Registered CAS-11 Low Voltage Memory Kit	713985-B21
	HP 16GB (1x16GB) Dual Rank x4 PC3-14900R (DDR3-1866) Registered CAS-13 Memory Kit	708641-B21

Core Options

Registered DIMMs (RDIMMs)

NOTE: The following memory is supported by the E5-2600 series Processors.

HP 4GB (1x4GB) Single Rank x4 PC3L-10600R (DDR3-1333) Registered CAS-9 Low Voltage Memory Kit	647893-B21
HP 4GB (1x4GB) Single Rank x4 PC3-12800R (DDR3-1600) Registered CAS-11 Memory Kit	647895-B21
HP 8GB (1x8GB) Dual Rank x4 PC3L-10600R (DDR3-1333) Registered CAS-9 Low Voltage Memory Kit	647897-B21
HP 8GB (1x8GB) Single Rank x4 PC3-12800R (DDR3-1600) Registered CAS-11 Memory Kit NOTE: 647899-B21 is supported by the E5-2600 and E5-2600v2 series Processors.	647899-B21
HP 8GB (1x8GB) Dual Rank x4 PC3-12800R (DDR3-1600) Registered CAS-11 Memory Kit	690802-B21
HP 16GB (1x16GB) Dual Rank x4 PC3L-10600R (DDR3-1333) Registered CAS-9 Low Voltage Memory Kit	647901-B21
HP 16GB (1x16GB) Dual Rank x4 PC3-12800R (DDR3-1600) Registered CAS-11 Memory Kit **NOTE:** 672631-B21 is supported by the E5-2600 and E5-2600v2 series Processors.	672631-B21

Unbuffered with ECC DIMMs (UDIMMs)

NOTE: The following memory is supported by the E5-2600 v2 series Processors.

HP 2GB (1x2GB) Single Rank x8 PC3L-12800E (DDR3-1600) Unbuffered CAS-11 Low Voltage Memory Kit	713975-B21
HP 2GB (1x2GB) Single Rank x8 PC3-14900E (DDR3-1866) Unbuffered CAS-13 Memory Kit	708631-B21
HP 4GB (1x4GB) Dual Rank x8 PC3L-12800E (DDR3-1600) Unbuffered CAS-11 Low Voltage Memory Kit	713977-B21
HP 4GB (1x4GB) Dual Rank x8 PC3-14900E (DDR3-1866) Unbuffered CAS-13 Memory Kit	708633-B21
HP 8GB (1x8GB) Dual Rank x8 PC3L-12800E (DDR3-1600) Unbuffered CAS-11 Low Voltage Memory Kit	713979-B21
HP 8GB (1x8GB) Dual Rank x8 PC3-14900E (DDR3-1866) Unbuffered CAS-13 Memory Kit	708635-B21

Unbuffered with ECC DIMMs (UDIMMs)

NOTE: The following memory is supported by the E5-2600 series Processors.

HP 2GB (1x2GB) Single Rank x8 PC3-12800E (DDR3-1600) Unbuffered CAS-11 Memory Kit	669320-B21
HP 2GB (1x2GB) Single Rank x8 PC3L-10600E (DDR3-1333) Unbuffered CAS-9 Low Voltage Memory Kit	647905-B21
HP 4GB (1x4GB) Dual Rank x8 PC3-12800E (DDR3-1600) Unbuffered CAS-11 Memory Kit	669322-B21
HP 4GB (1x4GB) Dual Rank x8 PC3L-10600E (DDR3-1333) Unbuffered CAS-9 Low Voltage Memory Kit	647907-B21
HP 8GB (1x8GB) Dual Rank x8 PC3-12800E (DDR3-1600) Unbuffered CAS-11 Memory Kit	669324-B21
HP 8GB (1x8GB) Dual Rank x8 PC3L-10600E (DDR3-1333) Unbuffered CAS-9 Low Voltage Memory Kit	647909-B21

Core Options

	Load Reduced DIMMs (LRDIMMs)	
	HP 32GB (1x32GB) Quad Rank x4 PC3-14900L (DDR3-1866) Load Reduced CAS-13 Memory Kit **NOTE:** This memory is supported by the E5-2600 v2 series Processors.	708643-B21
	HP 32GB (1x32GB) Quad Rank x4 PC3L-10600L (DDR3-1333) Load Reduced CAS-9 Low Voltage Memory Kit **NOTE:** This memory is only supported by the E5-2600 series Processors.	647903-B21
	NOTE: All DDR3 memory option kits consist of one DIMM per kit. For detailed memory configuration rules and guidelines, please use the Online DDR3 Memory Configuration Tool: http://www.hp.com/go/ddr3memory-configurator. **NOTE:** Kits described as LP include Low Power DIMMs. For more information on ProLiant Energy Efficient Features, see: http://www.hp.com/go/proliant-energy-efficient **NOTE:** PC3L is a low voltage memory	
HP Hard Drives	**NOTE:** The components of a storage subsystem (e.g. the drive, the HBA/controller, firmware, and the server backplane) should operate at the same data transfer rate or the system bandwidth will be negotiated down to an acceptable level for all components. **NOTE:** Hard drives have either a one year or three year warranty. **NOTE:** The non-hot plug hard drives use a quick release carrier. **NOTE:** The hard drive options are not required when configuring a Drive-less Model.	
	SAS Hot Plug with SmartDrive SFF (2.5-inch) Enterprise Drives	
	NOTE: Selection of SAS hard drives along with embedded controller (B320i) as primary controller requires the selection of SAS license Key (For CTO orders Customers MUST select 0D1 sku= p/n BC393A (HP SAS Nm 1-Srv Lic for B320i)	
	HP 1.2TB 6G SAS 10K rpm SFF (2.5-inch) SC Dual Port Enterprise 3yr Warranty Hard Drive	718162-B21
	HP 900GB 6G SAS 10K rpm SFF (2.5-inch) SC Enterprise 3yr Warranty Hard Drive	652589-B21
	HP 600GB 6G SAS 10K rpm SFF (2.5-inch) SC Enterprise 3yr Warranty Hard Drive	652583-B21
	HP 450GB 6G SAS 10K rpm SFF (2.5-inch) SC Enterprise 3yr Warranty Hard Drive	652572-B21
	HP 300GB 6G SAS 15K rpm SFF (2.5-inch) SC Enterprise 3yr Warranty Hard Drive	652611-B21
	HP 300GB 6G SAS 10K rpm SFF (2.5-inch) SC Enterprise 3yr Warranty Hard Drive	652564-B21
	HP 146GB 6G SAS 15K rpm SFF (2.5-inch) SC Enterprise 3yr Warranty Hard Drive	652605-B21
	SAS Hot Plug SmartDrive SFF (2.5-inch) Midline Drives	
	NOTE: Selection of SAS hard drives along with embedded controller (B320i) as primary controller requires the selection of SAS license Key (For CTO orders Customers MUST select 0D1 sku= p/n BC393A (HP SAS Nm 1-Srv Lic for B320i)	
	HP 1TB 6G SAS 7.2K rpm SFF (2.5-inch) SC Midline 1yr Warranty Hard Drive	652749-B21
	HP 500GB 6G SAS 7.2K rpm SFF (2.5-inch) SC Midline 1yr Warranty Hard Drive	652745-B21
	SAS Quick Release SFF (2.5-inch) Enterprise (ENT) Drives	
	NOTE: Selection of SAS hard drives along with embedded controller (B320i) as primary controller requires the selection of SAS license Key (For CTO orders Customers MUST select 0D1 sku= p/n BC393A (HP SAS Nm 1-Srv Lic for B320i)	
	HP 1.2TB 6G SAS 10K rpm SFF (2.5-inch) Quick Release Dual Port ENT 3yr Warranty Hard Drive	718164-B21
	HP 300GB 6G SAS 10K rpm SFF (2.5-inch) Quick-release Dual Port Enterprise 3yr Warranty Hard Drive	574879-B21

Core Options

NOTE: Please see the QuickSpecs for Technical Specifications and additional information:
http://h18000.www1.hp.com/products/quickspecs/12244_div/12244_div.html (Worldwide)

6G SATA Hot Plug with SmartDrive SFF (2.5-inch) Midline (MDL) Drives

HP 1TB 6G SATA 7.2K rpm SFF (2.5-inch) SC Midline 1yr Warranty Hard Drive	655710-B21
HP 500GB 6G SATA 7.2K rpm SFF (2.5-inch) SC Midline 1yr Warranty Hard Drive	655708-B21

6G SATA Quick Release SFF (2.5-inch) Midline (MDL) Drives

HP 1TB 6G SATA 7.2K rpm SFF (2.5-inch) Quick Release Midline 1yr Warranty Hard Drive	632080-B21
HP 500GB 6G SATA 7.2K rpm SFF (2.5-inch) Quick Release Midline 1yr Warranty Hard Drive	632078-B21

NOTE: Please see the QuickSpecs for Technical Specifications and additional information:
http://h18000.www1.hp.com/products/quickspecs/13021_div/13021_div.html (Worldwide)

6G SATA Value Endurance Hot Plug SFF (2.5-inch) Enterprise Boot Solid State Drives

HP 120GB 6G SATA Value Endurance SFF 2.5-in SC Enterprise Boot 3yr Wty Solid State Drive	717965-B21
HP 80GB 6G SATA Value Endurance SFF 2.5-in SC Enterprise Boot 3yr Wty Solid State Drive	734360-B21

6G SATA Value Endurance Hot Plug SFF (2.5-inch) Enterprise Value Solid State Drives

HP 800GB 6G SATA Value Endurance SFF 2.5-in SC Enterprise Value 3yr Wty Solid State Drive	717973-B21
HP 600GB 6G SATA Value Endurance SFF 2.5-in SC Enterprise Value 3yr Wty Solid State Drive	739898-B21
HP 300GB 6G SATA Value Endurance SFF 2.5-in SC Enterprise Value 3yr Wty Solid State Drive	739888-B21
HP 480GB 6G SATA Value Endurance SFF 2.5-in SC Enterprise Value 3yr Wty Solid State Drive	717971-B21
HP 240GB 6G SATA Value Endurance SFF 2.5-in SC Enterprise Value 3yr Wty Solid State Drive	717969-B21

6G SATA ME Hot Plug SFF (2.5-inch) Enterprise Mainstream Solid State Drives

HP 800GB 6G SATA Mainstream Endurance SFF 2.5-in SC Enterprise Mainstream 3yr Wty Solid State Drive	691868-B21
HP 400GB 6G SATA Mainstream Endurance SFF 2.5-in SC Enterprise Mainstream 3yr Wty Solid State Drive	691866-B21
HP 200GB 6G SATA Mainstream Endurance SFF 2.5-in SC Enterprise Mainstream 3yr Wty Solid State Drive	691864-B21
HP 100GB 6G SATA Mainstream Endurance SFF 2.5-in SC Enterprise Mainstream 3yr Wty Solid State Drive	691862-B21

Core Options

6G SATA Value Endurance Quick Release SFF (2.5-inch) Enterprise Boot Solid State Drives	
HP 120GB 6G SATA Value Endurance SFF 2.5-in Quick-release Enterprise Boot 3yr Wty Solid State Drive	718174-B21
HP 80GB 6G SATA Value Endurance SFF 2.5-in Quick-release Enterprise Boot 3yr Wty Solid State Drive	734364-B21
6G SATA Value Endurance Quick Release SFF (2.5-inch) Enterprise Value Solid State Drives	
HP 800GB 6G SATA Value Endurance SFF 2.5-in Quick-release Enterprise Value 3y Wty Solid State Drive	718192-B21
HP 600GB 6G SATA Value Endurance SFF 2.5-in Quick-release Enterprise Value 3yr Wty Solid State Drive	739902-B21
HP 480GB 6G SATA Value Endurance SFF 2.5-in Quick-release Enterprise Value 3yr Wty Solid State Drive	718186-B21
HP 300GB 6G SATA Value Endurance SFF 2.5-in Quick-release Enterprise Value 3yr Wty Solid State Drive	739892-B21
HP 240GB 6G SATA Value Endurance SFF 2.5-in Quick-release Enterprise Value 3yr Wty Solid State Drive	718180-B21
6G SATA RI-2 SFF SC SSD	
HP 1.6TB 6G SATA RI-2 SFF SC SSD	804605-B21
HP 800GB 6G SATA RI-2 SFF SC SSD	804599-B21
HP 480GB 6G SATA RI-2 SFF SC SSD	804593-B21
HP 240GB 6G SATA RI-2 SFF SC SSD	804587-B21
HP 120GB 6G SATA RI-2 SFF SC SSD	804581-B21
HP 80GB 6G SATA RI-2 SFF SC SSD	804575-B21
6G SATA MU-2 SFF SC SSD	
HP 1.6TB 6G SATA MU-2 SFF SC SSD	804631-B21
HP 800GB 6G SATA MU-2 SFF SC SSD	804625-B21
HP 480GB 6G SATA MU-2 SFF SC SSD	832414-B21
HP 200GB 6G SATA MU-2 SFF SC SSD	804613-B21
6G SATA WI-2 SFF SC SSD	
HP 1.2TB 6G SATA WI-2 SFF SC SSD	804677-B21
HP 800GB 6G SATA WI-2 SFF SC SSD	804671-B21
HP 400GB 6G SATA WI-2 SFF SC SSD	804665-B21
HP 200GB 6G SATA WI-2 SFF SC SSD	804639-B21
6G SATA ME Quick Release SFF (2.5-inch) Enterprise Mainstream Solid State Drives	
HP 800GB 6G SATA Mainstream Endurance SFF 2.5-in QR Enterprise Mainstream 3yr Wty Solid State Drive	730057-B21
HP 400GB 6G SATA Mainstream Endurance SFF 2.5-in QR Enterprise Mainstream 3yr Wty Solid State Drive	730055-B21
HP 200GB 6G SATA Mainstream Endurance SFF 2.5-in QR Enterprise Mainstream 3yr Wty Solid State Drive	730053-B21
HP 100GB 6G SATA Mainstream Endurance SFF 2.5-in QR Enterprise Mainstream 3yr Wty Solid State Drive	730051-B21

NOTE: Please see the QuickSpecs for Technical Specifications and additional information:

http://h18000.www1.hp.com/products/quickspecs/14038_div/14038_div.html (Worldwide)

	12G SAS Value Endurance Solid State Drives	
	HP 800GB 12G SAS Value Endurance SFF 2.5-in SC Enterprise Value 3yr Wty Solid State Drive	762261-B21
	HP 1.6TB 12G SAS Value Endurance SFF 2.5-in SC Enterprise Value 3yr Wty Solid State Drive	762263-B21
	HP 800GB 12G SAS Value Endurance LFF 3.5-in SC Enterprise Value 3yr Wty Solid State Drive	762270-B21
	HP 1.6TB 12G SAS Value Endurance LFF 3.5-in SC Enterprise Value 3yr Wty Solid State Drive	762272-B21
HP Networking	**Gigabit Ethernet Adapters**	
	HP NC112T PCI Express Gigabit Server Adapter	503746-B21
	HP NC365T 4-port Ethernet Server Adapter	593722-B21
	HP Ethernet 1Gb 4-port 331T Adapter	647594-B21
	HP Ethernet 1Gb 2-port 361T Adapter	652497-B21
	HP Ethernet 1Gb 2-port 332T Adapter	615732-B21
	10 Gigabit Ethernet adapters **NOTE:** The SL250s Gen8 supports only the low-profile version of the 10GbE Ethernet Adapters. **NOTE:** Direct Attach Cable (DAC) for copper environments or fiber transceivers and cables for fiber-optic environments must be purchased separately.	
	HP NC523SFP 10Gb 2-port Server Adapter	593717-B21
	HP Ethernet 10Gb 2-port 530T Adapter	656596-B21
	HP NC552SFP 10Gb 2-port Ethernet Server Adapter	614203-B21
	HP Ethernet 10Gb 2-port 530SFP Adapter	652503-B21
	HP Ethernet 10Gb 2-port 560SFP+ Adapter	665249-B21
	HP Ethernet 10Gb 2-port 561T Adapter **NOTE:** Can only be paired with M2070 and M2090 GPU Kits	716591-B21
	FlexibleLOM Adapters	
	HP Ethernet 1Gb 4-port 331FLR Adapter	629135-B21
	HP Ethernet 1Gb 4-port 366FLR Adapter	665240-B21
	HP FlexFabric 10Gb 2-port 526FLR-SFP+ Adapter	629138-B21
	HP Ethernet 10Gb 2-port 530FLR-SFP+ Adapter	647581-B21
	HP FlexFabric 10Gb 2-port 533FLR-T Adapter	700759-B21
	HP FlexFabric 10Gb 2-port 534FLR-SFP+ Adapter	700751-B21
	HP FlexFabric 10Gb 2-port 554FLR-SFP+ Adapter	629142-B21

Core Options

	HP Ethernet 10Gb 2-port 560FLR-SFP+ Adapter **NOTE:** Please see the QuickSpecs for Technical Specifications and additional information: http://www.hp.com/go/ProLiantNICs	665243-B21
HP InfiniBand	QLogic InfiniBand 4X QDR PCI-E G2 Dual Port HCA	583211-B21
	HP Infiniband FDR/Ethernet 10Gb/40Gb 2-port 544QSFP Adapter **NOTE:** Dual port ConnectX-3 FDR/QDR IB or 40/10GbE. No IB Enablement Kit required.	649281-B21
	FlexibleLOM Adapters	
	HP InfiniBand FDR 2-port 545FLR-QSFP Adapter **NOTE:** Dual port Connect-IB FDR IB PCI-e gen 3 x16. No IB Enablement Kit required.	702212-B21
	HP Infiniband FDR/Ethernet 10Gb/40Gb 2-port 544FLR-QSFP Adapter **NOTE:** Dual port ConnectX-3 FDR/QDR IB or 40/10GbE. No IB Enablement Kit required.	649282-B21
	HP Infiniband QDR/Ethernet 10Gb 2-port 544FLR-QSFP Adapter **NOTE:** Dual port ConnectX-3 QDR IB or 10GbE. No IB Enablement Kit required. **NOTE:** Please see the QuickSpecs for additional information: http://h18000.www1.hp.com/products/quickspecs/13078_div/13078_div.html	649283-B21

Additional Options

NOTE: Some options may not be integrated at the factory. To ensure only valid configurations are ordered, HP recommends the use of an HP approved configurator. Contact your local sales representative for additional information.

HP Insight Software

HP Insight Control

HP Insight Control including 1yr 24x7 Technical Support and Updates Single Server License	C6N27A
HP Insight Control including 1yr 24x7 Technical Support and Updates Electronic License	C6N28ABE
HP Insight Control Server Provisioning Media Kit	BD883A
HP Insight Management Media Kit	C6N31A

NOTE: Electronic and Flexible-Quantity licenses can be used to purchase multiple licenses with a single activation key.
NOTE: Customer will receive a license entitlement certificate. The license entitlement certificate must be redeemed online or via fax in order to obtain the license activation key(s). Includes one year of 24 x 7 HP Software Technical Support and Update Service.
NOTE: Licenses ship without media. The HP Insight Control Media Kit can be ordered separately, or can be downloaded at: http://www.hp.com/go/insightupdates.
NOTE: For additional license options please see the QuickSpecs at: http://h18000.www1.hp.com/products/quickspecs/12631_div/12631_div.html

HP Integrated Lights-Out (iLO)

HP iLO Scale Out

HP Integrated Lights-Out Scale-Out including 3yr 24x7 Tech Support and Updates Flex Qty E-LTU	BD776AAE
HP Integrated Lights-Out Scale-Out 3yr 24x7 Tech Support and Updates Flex Quantity License	BD776A
HP Integrated Lights-Out Scale-Out including 3yr 24x7 Tech Support and Updates Tracking License	BD777A
HP Integrated Lights-Out Scale-Out including 1yr 24x7 Tech Support and Updates Flex Qty E-LTU	BD778AAE
HP Integrated Lights-Out Scale-Out 1yr 24x7 Tech Support and Updates Flex Quantity License	BD778A
HP Integrated Lights-Out Scale-Out including 1yr 24x7 Tech Support and Updates Tracking License	BD779A
HP iLO Advanced including 1yr 24x7 Technical Support and Updates E-LTU	E6U59ABE
HP iLO Advanced including 3yr 24x7 Technical Support and Updates E-LTU	E6U64ABE

NOTE: Licenses ship without media. The Media Kit for Insight Control for Linux can be ordered separately, or can be downloaded at: http://www.hp.com/go/ic-linux (click on Download button).
NOTE: Electronic and Flexible-Quantity licenses can be used to purchase multiple licenses with a single set of activation keys.
NOTE: For additional license options please see the QuickSpecs at: http://h18000.www1.hp.com/products/quickspecs/13019_div/13019_div.html

HP Integrated Lights-Out (iLO) Advanced for ProLiant

HP iLO Advanced including 1yr 24x7 Technical Support and Updates Single Server License	512485-B21
HP iLO Advanced 1 Server License with 3yr 24x7 Tech Support and Updates	BD505A

Additional Options

NOTE: For additional license options please see the Insight Control QuickSpecs at: http://h18000.www1.hp.com/products/quickspecs/14276_div/14276_div.html

NOTE: For more information, visit: http://www.hp.com/go/ilo.

High Performance Clusters	**HP Cluster Management Utility**	
	HP Insight Cluster Management Utility 1yr 24x7 Flexible License	QL803B
	HP Insight Cluster Management Utility 3yr 24x7 Flexible License **NOTE:** These part numbers can be used to purchase one certificate for multiple licenses and support with a single activation key. Each license is for one node (server). Customer will receive a printed end user license agreement and license entitlement certificate via physical shipment. The license entitlement certificate must be redeemed online in order to obtain a license key. Customer also will receive a support agreement.	BD476A
	HP Insight Cluster Management Utility Media	BD477A
	NOTE: For additional license kits please see the QuickSpecs at http://h18004.www1.hp.com/products/quickspecs/12612_div/12612_div.html	
Cloudera Licensing	**Cloudera Licenses Available for SL250 Server**	
	Cloudera Ent Basic Ed 1yr 24x7 Phys Lic	G7M27A
	Cloudera Ent Basic Ed 1yr 24x7 E-LTU	G7M27AAE
	Cloudera Ent Basic Ed 1yr 8x5 Phys Lic	G7M28A
	Cloudera Ent Basic Ed 1yr 8x5 E-LTU	G7M28AAE
	Cloudera EDH Ed 1yr 24x7 Phys Lic	G7M29A
	Cloudera EDH Ed 1yr 24x7 E-LTU	G7M29AAE
	Cloudera EDH Ed 1yr 8x5 Phys Lic	G7M30A
	Cloudera EDH Ed 1yr 8x5 E-LTU	G7M30AAE
	Cloudera EDH Ed 1yr 24x7 Premium E-LTU	G7M31AAE
HP I/O Accelerator Options	**Second Generation Accelerators**	
	HP 365GB Multi Level Cell G2 PCIe ioDrive2 for ProLiant Servers	673642-B21
	HP 785GB Multi Level Cell G2 PCIe ioDrive2 for ProLiant Servers	673644-B21
	HP 1205GB Multi Level Cell G2 PCIe ioDrive2 for ProLiant Servers	673646-B21
	NOTE: Please see the QuickSpecs for Technical Specifications and additional information: http://h18000.www1.hp.com/products/quickspecs/13587_div/13587_div.html (Worldwide)	
HP PCIe Workload Accelerator Options	**Mainstream Endurance (ME) PCIe Workload Accelerators**	
	HP 1.4TB HH/HL Mainstream Endurance (ME) PCIe Workload Accelerator	729307-B21
	HP 700GB HH/HL Mainstream Endurance (ME) PCIe Workload Accelerator	729305-B21
	High Endurance (HE) PCIe Workload Accelerators	
	HP 700GB HH/HL High Endurance (HE) PCIe Workload Accelerator	708090-B21
	HP 350GB HH/HL High Endurance (HE) PCIe Workload Accelerator	708088-B21
	Value Endurance (VE) PCIe Workload Accelerators	
	HP 1.3TB HH/HL Value Endurance (VE) PCIe Workload Accelerator	763834-B21
	HP 1.6TB HH/HL Value Endurance (VE) PCIe Workload Accelerator	763836-B21
	HP 3.2TB HH/HL Value Endurance (VE) PCIe Workload Accelerator	763838-B21
	HP 6.4TB FH/HL Value Endurance (VE) PCIe Workload Accelerator	763840-B21

Additional Options

NOTE: Please see the QuickSpecs for Technical Specifications and additional information:
http://h18000.www1.hp.com/products/quickspecs/14528_div/14528_div.html (Worldwide)

Computational and Graphics Accelerators

NOTE: Each SL250s tray will accommodate up to three accelerators. Maximum number of accelerators is 3 unless explicitly stated. In order to support three accelerators, at least 3 HP 1500W Common Slot Platinum Plus Hot Plug Power Supply Kit (684532-B21) must be used. For 1-2 accelerators, either three of the 1500W or four of the HP 1200W Common Slot Platinum Plus Hot Plug Power Supply Kit (578322-B21) must be used.
NOTE: One must configure a minimum of 4GB of memory per processor when accelerators are installed.
NOTE: Mixing of accelerators or coprocessors within the same server is not allowed.

NVIDIA Accelerators for HP ProLiant Servers

NVIDIA Tesla K10 Dual GPU PCIe Computational Accelerator **NOTE:** Currently only configurable with 698723-B21, 698724-B21 nodes.	B3M66A
NVIDIA Tesla K10 Rev B Dual GPU PCIe Computational Accelerator **NOTE:** Currently only configurable with 750349-B21, 750350-B21 nodes.	E5V47A
NVIDIA Tesla K20 5 GB Computational Accelerator	C7S14A
NVIDIA Tesla K20X 6 GB Computational Accelerator	C7S15A
NVIDIA Tesla K40 12 GB Computational Accelerator **NOTE:** Currently only configurable with 750349-B21, 750350-B21 nodes. **NOTE:** Currently PCIe Gen 2	F1R08A
NVIDIA GRID K2 Dual GPU PCIe Graphics Accelerator **NOTE:** Currently only configurable with 750349-B21, 750350-B21 nodes. **NOTE:** If node 698723-B21or 698724-B21 is selected with any permissible quantity of K20 or K20X or K40 or K2 cards, factory will be triggered to turn Dip Switch 9 to status, "ON." **NOTE:** For additional information on NVidia accelerators, please see the QuickSpecs at: http://h18004.www1.hp.com/products/quickspecs/14576_div/14576_div.html	729851-B21

Intel Xeon Phi Coprocessor Kits

Intel® Xeon® Phi 5110P (8GB/225W) Coprocessor Kit	C1P87A
Intel® Xeon® Phi 7120P (16GB/300W) Coprocessor Kit **NOTE:** Maximum number of 7120p coprocessors in SL250s is two (2). **NOTE:** 7120p coprocessors are only supported with E5-2600v2 processors. **NOTE:** If node 698723-B21or 698724-B21 is selected with any permissible quantity of C1P87A or E2M34A cards, factory will be triggered to turn Dip Switch 9 to status, "ON." **NOTE:** For additional information on Intel Xeon Phi coprocessors, please see the QuickSpecs at: http://h18000.www1.hp.com/products/quickspecs/14441_div/14441_div.html	E2M34A

Enablement Kits

HP SL250 NVIDIA GPU Enablement Kit **NOTE:** Each NVidia K2/K20/K20x/K40 card requires 1 of these enablement kits.	711947-B21
HP SL250 Coprocessor Enablement Kit **NOTE:** Required when ordering Intel Xeon Phi 5110p/7120p Coprocessor.	711949-B21

HP Storage Controllers **SAS Controllers**

Additional Options

Smart Array P222 Controller

HP Smart Array P222/512 FBWC 6Gb 1-port Int/1-port Ext SAS Controller	631667-B21
NOTE: This part can be partnered with either E5-2600 or E5-2600v2 processors	

Smart Array P420 Controller

HP Smart Array P420/1GB FBWC 6Gb 2-ports Int SAS Controller	631670-B21
NOTE: This part can only be partnered with Intel E5-2600 processors (v1)	
HP Smart Array P420/2GB FBWC 6Gb 2-ports Int SAS Controller	631671-B21
NOTE: This part can only be partnered with Intel E5-2600 processors (v1)	

Smart Array P421 Controller

HP Smart Array P421/1GB FBWC 6Gb 2-ports Ext SAS Controller	631673-B21
HP Smart Array P421/2GB FBWC 6Gb 2-ports Ext SAS Controller	631674-B21

Optional Upgrades

HP 512MB B-series Dynamic Smart Array Flash Backed Write Cache with 24 inch Cable	676473-B21
HP 24in Super Capacity Option for Smart Array	668944-B21
HP SL250s 4X SFF Smart Array Enablement Kit	670564-B21
HP SL250 SFF Internal Enablement Kit	679991-B21
NOTE: The SFF HDD Internal Enablement Kit is required to be selected whenever a Quick Release SFF drive is ordered.	
NOTE: The SFF enablement kit allows up to four SFF HDD to be implemented in place of the three GPUs.	
NOTE: This SFF enablement kit will not work with the Smart Array P420 Controller (631670-B21, 631671-B21) due to cable restrictions.	
HP SAS License Key No Media 1 Single Server License for B320i	BC393A
HP SmartCache No Media 24x7 Technical Support 1 Svr License	D7S26A
HP SmartCache No Media 24x7 Technical Support Flexible License	D7S27A
HP SmartCache No Media 24x7 Technical Support Electronic License	D7S27AAE
NOTE: Please see the QuickSpecs for Technical Specifications and additional information: http://h18000.www1.hp.com/products/quickspecs/14227_div/14227_div.html (Smart Array P222 Controller) http://h18000.www1.hp.com/products/quickspecs/14228_div/14228_div.html (Smart Array P420 Controller) http://h18000.www1.hp.com/products/quickspecs/14229_div/14229_div.html (Smart Array P421 Controller) http://h18000.www1.hp.com/products/quickspecs/13200_div/13200_div.html (Smart Array Advanced Pack)	

Host Bus Adapter

HP H220 Host Bus Adapter	650933-B21
HP H222 Host Bus Adapter	650926-B21
NOTE: Please see the QuickSpecs for Technical Specifications and additional information: http://h18004.www1.hp.com/products/quickspecs/14336_div/14336_div.html (HBA 220)	

Additional Options

	http://h18004.www1.hp.com/products/quickspecs/14337_div/14337_div.html (HBA 222)	
HP Tape Backup	**NOTE:** For the complete range of tape drives, autoloaders, libraries and media see: http://www.hp.com/go/tape. For hardware and software compatibility of HP tape backup products see: http://www.hp.com/storage/SPOCK	
	HP StoreEver LTO-6 Ultrium 6250 Tape Drive in 1U Rack-mount Kit	C0L99A
	HP StoreEver 1/8 G2 LTO-6 Ultrium 6250 FC Tape Autoloader	C0H19A
HP Tape Storage Systems	**HP StoreEver MSL6480**	
	HP StoreEver MSL6480 Scalable Base Module	QU625A
	NOTE: Please see the QuickSpecs for Technical Specifications and additional information: http://h18000.www1.hp.com/products/quickspecs/14604_div/14604_div.html (Worldwide)	
HP Disk Storage Systems	**Disk Enclosures**	
	HP D2600 w/12 4TB 6G SAS 7.2K LFF Dual Port MDL HDD 48TB Bundle	E7W32A
	NOTE: Please see the QuickSpecs for Technical Specifications and additional information: http://h18000.www1.hp.com/products/quickspecs/13404_div/13404_div.html (Worldwide)	
HP Uninterruptible Power Systems	**HP Rack-mountable UPS**	
	HP R1500 G3 Uninterruptible Power Supply (UPS)	
	HP R1.5kVA G3 1U NA Uninterruptible Power System	AF469A
	HP R1.5kVA G3 1U JP/TW Uninterruptible Power System	AF470A
	HP R1.5kVA G3 1U INTL Uninterruptible Power System	AF471A
	NOTE: Please see the QuickSpecs for additional information: http://h18000.www1.hp.com/products/quickspecs/14059_div/14059_div.html (Worldwide)	
	HP R/T3000 G2 Uninterruptible Power System (UPS)	
	HP R/T3000 G2 2U L530 Low Voltage NA/JP Uninterruptible Power System	AF466A
	HP R/T3000 G2 2U L620 High Voltage NA/JP Uninterruptible Power System	AF467A
	HP R/T3000 G2 2U Detachable Cord High Voltage INTL Uninterruptible Power System	AF468A
	NOTE: Please see the QuickSpecs for additional information: http://h18000.www1.hp.com/products/quickspecs/14058_div/14058_div.html (Worldwide)	
	R5000 Uninterruptible Power System (UPS)	
	HP R5KVA 3U IEC309-32A High Voltage INTL Uninterruptible Power System	AF461A
	HP R5KVA 3U L630 High Voltage NA/JP Uninterruptible Power System	AF460A
	NOTE: Please see the QuickSpecs for additional information: http://h18000.www1.hp.com/products/quickspecs/14109_div/14109_div.html (Worldwide)	
	R7000 Uninterruptible Power System (UPS)	
	HP R7KVA 4U 50A High Voltage NA/JP Uninterruptible Power System	AF462A

Additional Options

	HP R7KVA 4U IEC-32A High Voltage INTL Uninterruptible Power System **NOTE:** Please see the QuickSpecs for additional information: http://h18000.www1.hp.com/products/quickspecs/14110_div/14110_div.html (Worldwide) **NOTE:** For additional information on HP Uninterruptible Power Systems please go to: http://www.hp.com/servers/rackups. **NOTE:** For additional information on sizing your server, please reference: http://www.upssizer.com. **NOTE:** Please see the UPS and PDU cable matrix's on the HP Power Protection and Management page. Under Power Cords, click on the "HP Power Cord Matrix" link. That link will list cable descriptions, requirements, and specifications for UPS and PDU units. Please see the following link: http://www.hp.com/products/powercords.	AF463A
HP Basic Power Distribution Units	HP 1.9kVA 120 Volt L5-20 Input (12xNEMA 5-20R) NA/JP Basic PDU	H5M54A
	HP 2.8kVA 120 Volt L5-30 Input (18xNEMA 5-20R) NA/JP Basic PDU	H5M55A
	HP 3.6kVA 200-240 Volt Detachable C20 Input (12xC13) WW Basic PDU	H5M56A
	HP 3.6kVA 200-240 Volt Detachable C20 Input (18xC13) WW Basic PDU	H5M57A
	HP 4.9kVA 208 Volt L6-30 Input (20xC13) NA/JP Basic PDU	H5M58A
	HP 4.9kVA 208 Volt L6-30 Input (24xC13/6xC19) NA/JP Basic PDU	H5M59A
	HP 8.3kVA 208 Volt CS8265C Input (30xC13/6xC19) NA/JP Basic PDU	H5M60A
	HP 8.6kVA 208 Volt L15-30 3-Phase Input (18xC13) NA/JP Basic PDU	H5M61A
	HP 8.6kVA 208 Volt L15-30 3-Phase Input (24xC13/6xC19) NA/JP Basic PDU	H5M62A
	HP 5.7kVA 208 Volt L21-20 3-Phase Input (24xC13/3xNEMA 5-20R) NA/JP Basic PDU	H5M63A
	HP 8.6kVA 208 Volt L21-30 3-Phase Input (24xC13/3xC19/3xNEMA 5-20R) NA/JP Basic PDU	H5M64A
	HP 11kVA 400 Volt IEC309 30A 3-Phase Input (36xC13/6xC19) NA Basic PDU	H5M67A
	HP 7.3kVA 230 Volt IEC309 32A Input (20xC13) INTL Basic PDU	H5M68A
	HP 7.3kVA 230 Volt IEC309 32A Input (24xC13/6xC19) INTL Basic PDU	H5M70A
	HP 11kVA 230 Volt IEC309 63A Input (30xC13/6xC19) INTL Basic PDU	H5M71A
	HP 11kVA 400 Volt IEC309 16A 3-Phase Input (30xC13/6xC19) INTL Basic PDU	H5M72A
	HP 11kVA 400 Volt IEC309 16A 3-Phase Input (36xC13/6xC19) INTL Basic PDU	H5M73A
	HP Hardwired 200-240 Volt Input (30xC13/6xC19) WW Basic PDU	H5M75A
	HP 13.2kVA 480 Volt IEC309 30A 3-Phase Input (15 Outlet) NA Basic PDU	H3X07A
	HP 19.9kVA 480 Volt IEC309 30A 3-Phase Input (30 Outlet) NA Basic PDU	H3X08A
	HP 277 Volt options for H3X07A and H3X08A	
	HP 800VA - 277V Input / 230V Output NA Rack Mount Transformer	H3X09A
	NOTE: Please see the QuickSpecs for Technical Specifications and additional information: http://h18000.www1.hp.com/products/quickspecs/14557_div/14557_div.html (Worldwide)	
	NOTE: Additional HP Power Distribution Units are available. For a complete list of all HP PDUs and additional information please visit http://www.hp.com/go/rackandpower.	
HP Remote Monitoring Power Distribution Units	HP 2.8kVA 120 Volt L5-30 Input (12xNEMA 5-20R)NA/JP Monitored PDU	D9N43A
	HP 4.9kVA 208 Volt L6-30 Input (12xC13) NA/JP Monitored PDU	D9N44A
	HP 3.6kVA 200-240 Volt Detachable C20 Input (16xC13) WW Monitored PDU	D9N45A

Additional Options

	HP 3.6kVA 200-240 Volt Detachable C20 Input (12xC13) WW Monitored PDU	D9N46A
	HP 4.9kVA 208 Volt L6-30 Input (20xC13/4xC19) NA/JP Monitored PDU	D9N47A
	HP 7.3kVA 230 Volt IEC309 32A Input (20xC13/4xC19) INTL Monitored PDU	D9N48A
	HP 8.3kVA 208 Volt CS8265C Input (30xC13/3xC19) NA Monitored PDU	D9N49A
	HP 7.3kVA 230 Volt IEC309 32A Input (32xC13/4xC19) INTL Monitored PDU	D9N50A
	HP 8.6kVA 208 Volt L15-30 3-Phase Input (18xC13/3xC19) NA/JP Monitored PDU	D9N51A
	HP 5.7kVA 208 Volt L21-20 3-Phase Input (18xC13/3xNEMA 5-20R) NA/JP Monitored PDU	D9N52A
	HP 8.6kVA 208 Volt L21-30 3-Phase Input (20xC13/3xC19/3xNEMA 5-20R) NA/JP Monitored PDU	D9N53A
	HP 17.3kVA 208 Volt IEC309 60A 3-Phase Input (24xC13/3xC19) NA/JP Monitored PDU	D9N54A
	HP 11kVA 400 Volt IEC309 16A 3-Phase Input (18xC13/3xC19) INTL Monitored PDU	D9N55A
	HP 22kVA 400 Volt IEC309 32A 3-Phase Input (30xC13/3xC19) INTL Monitored PDU	D9N56A
	HP 11kVA 400 Volt IEC309 16A 3-Phase Input (30xC13/3xC19) INTL Monitored PDU	D9N57A
	HP 14.4kVA 208 Volt CS8365C 3-Phase Input (12xC13/12xC19)NA Monitored PDU	D9N58A
	HP 17.3kVA 208 Volt IEC309 60A 3-Phase Input (12xC13/12xC19) NA/JP Monitored PDU	D9N59A
	HP 22kVA 400 Volt IEC309 32A 3-Phase Input (12xC13/12xC19) INTL Monitored PDU	D9N60A
	HP 16.6kVA 400 Volt IEC309 30A 3-Phase Input (30xC13/3xC19) NA Monitored PDU	D9N61A
	HP 16.6kVA 400 Volt IEC309 30A 3-Phase Input (12xC13/12xC19) NA Monitored PDU	D9N62A
	HP 19.9kVA 480 Volt 3-Phase (30 Outlet) NA Monitored PDU	D9N63A
	HP Environmental Sensor for Remote Monitored PDUs	
	HP Environmental Sensor for Remote Monitored PDUs	E2D53A
	NOTE: Please see the QuickSpecs for additional information: http://h18000.www1.hp.com/products/quickspecs/14669_div/14669_div.html (Worldwide)	
HP Intelligent Power Distribution Units (iPDU)	**iPDU Core Units**	
	HP 4.9kVA 24A Single Phase NA/JP Core Intelligent Modular Power Distribution Unit	AF520A
	HP 8.3kVA 40A Single Phase NA/JP Core Intelligent Modular Power Distribution Unit	AF521A
	HP 8.6kVA 24A Three Phase NA/JP Core Intelligent Modular Power Distribution Unit	AF522A
	HP 14.4kVA 40A Three Phase NA/JP Intelligent Modular Power Distribution Unit	AF533A
	HP 17.3kVA 48A Three Phase NA/JP Core Intelligent Modular Power Distribution Unit	AF523A
	HP 17.3kVA 24A 415V Three Phase L22-30 NA Core Intelligent Power Distribution Unit	AF902A
	HP 7.3kVA 32A Single Phase INTL Core Intelligent Modular Power Distribution Unit	AF525A
	HP 11kVA 16A Three Phase INTL Core Intelligent Modular Power Distribution Unit	AF526A
	HP 22kVA 32A Three Phase INTL Core Intelligent Modular Power Distribution Unit	AF527A
	HP 17.3kVA 48A 208V Three Phase 12 Outlet Core NA/JP Intelligent Power Distribution Unit	AF535A
	HP 17.3kVA 24A 415V Three Phase 12 Outlet Core NA/JP Intelligent Power Distribution Unit	AF537A
	HP 22kVA 32A 400V Three Phase 12 Outlet Core INTL Intelligent Power Distribution Unit	AF538A

Additional Options

	iPDU Kits with Standard Extension Bars	
	HP 4.9kVA 24A Single Phase NA/JP Intelligent Modular Power Distribution Kit	AF531A
	HP 8.6kVA 24A Three Phase NA/JP Intelligent Modular Power Distribution Kit	AF532A
	HP 7.3kVA 32A Single Phase INTL Intelligent Modular Power Distribution Kit	AF534A
	iPDU Extension Bars	
	HP 5xC13 Intelligent PDU Extension Bar G2 Kit	AF547A
	HP 5xC13 Outlets Power and UID LEDs Pair Standard Extension Bar	AF528A
	NOTE: Please see the QuickSpecs for Technical Specifications and additional information: http://h18000.www1.hp.com/products/quickspecs/13650_div/13650_div.html (Worldwide) **NOTE:** Additional HP Power Distribution Units are available. For a complete list of all HP PDUs and additional information please visit http://www.hp.com/go/rackandpower.	
HP Rack Series	**HP Intelligent Series Rack**	
	HP 636 1200mm Pallet Intelligent Series Rack	BW899A
	HP 636 1200mm Shock Intelligent Series Rack	BW900A
	HP 642 1200mm Pallet Intelligent Series Rack	BW907A
	HP 642 1200mm Shock Intelligent Series Rack	BW908A
	HP 647 1200mm Pallet Intelligent Series Rack	BW913A
	HP 647 1200mm Shock Intelligent Series Rack	BW914A
	NOTE: Please see the QuickSpecs for Technical Specifications: http://h18000.www1.hp.com/products/quickspecs/14223_div/14223_div.html (Worldwide) **NOTE:** For additional information regarding Rack Cabinets, please see the following URL: http://www.hp.com/go/rackandpower.	
HP Rack Options	**HP TFT7600 G2 KVM Console and Monitor (TFT7600 G2)**	
	HP TFT7600 G2 KVM Console Rackmount Keyboard US Monitor	AZ870A
	HP TFT7600 G2 KVM Console Rackmount Keyboard UK Monitor	AZ871A
	HP TFT7600 G2 KVM Console Rackmount Keyboard DE Monitor	AZ872A
	HP TFT7600 G2 KVM Console Rackmount Keyboard FR Monitor	AZ873A
	HP TFT7600 G2 KVM Console Rackmount Keyboard IT Monitor	AZ874A
	HP TFT7600 G2 KVM Console Rackmount Keyboard ES Monitor	AZ875A
	HP TFT7600 G2 KVM Console Rackmount Keyboard DK Monitor	AZ876A
	HP TFT7600 G2 KVM Console Rackmount Keyboard NO Monitor	AZ877A
	HP TFT7600 G2 KVM Console Rackmount Keyboard SE/FI Monitor	AZ878A
	HP TFT7600 G2 KVM Console Rackmount Keyboard CH Monitor	AZ879A
	HP TFT7600 G2 KVM Console Rackmount Keyboard PT Monitor	AZ880A
	HP TFT7600 G2 KVM Console Rackmount Keyboard BE Monitor	AZ881A
	HP TFT7600 G2 KVM Console Rackmount Keyboard JP Monitor	AZ882A
	HP TFT7600 G2 KVM Console Rackmount Keyboard RU Monitor	AZ883A
	HP TFT7600 G2 KVM Console Rackmount Keyboard Intl Monitor	AZ884A
	HP TFT7600 G2 KVM Console Rackmount Keyboard US TAA Monitor	AZ885A
	NOTE: Please see the QuickSpecs for Technical Specifications and additional	

Additional Options

information:
http://h18000.www1.hp.com/products/quickspecs/13731_div/13731_div.html
(Worldwide)

HP USB Keyboard and Mouse

HP USB BFR with PVC Free US Keyboard/Mouse Kit	631341-B21
HP USB BFR with PVC Free UK Keyboard/Mouse Kit	631344-B21
HP USB BFR with PVC Free FR Keyboard/Mouse Kit	631346-B21
HP USB BFR with PVC Free ES Keyboard/Mouse Kit	631348-B21
HP USB BFR with PVC Free DE Keyboard/Mouse Kit	631358-B21
HP USB BFR with PVC Free JP Keyboard/Mouse Kit	631360-B21
HP USB BFR with PVC Free IT Keyboard/Mouse Kit	631362-B21
HP USB BFR with PVC Free CN Keyboard/Mouse Kit	631364-B21
HP USB BFR with PVC Free AE Keyboard/Mouse Kit	638212-B21
HP USB BFR with PVC Free RU Keyboard/Mouse Kit	638214-B21
HP USB BFR with PVC Free IN Keyboard/Mouse Kit	672097-D63
HP USB BFR with PVC Free AP-Intl Keyboard/Mouse Kit	672097-373
HP USB BFR with PVC Free Intl Keyboard/Mouse Kit	672097-B33
HP USB BFR with PVC Free PT Keyboard/Mouse Kit	672097-133
HP USB BFR with PVC Free TR Keyboard/Mouse Kit	672097-143
HP USB BFR with PVC Free CZ Keyboard/Mouse Kit	672097-223
HP USB BFR with PVC Free FI Keyboard/Mouse Kit	672097-353
HP USB BFR with PVC Free SE Keyboard/Mouse Kit	672097-103
HP USB BFR with PVC Free CH Keyboard/Mouse Kit	672097-113
HP USB BFR with PVC Free KR Keyboard/Mouse Kit	672097-KD3
HP USB BFR with PVC Free IN Keyboard/Mouse Kit	672097-D63

NOTE: Please see the QuickSpecs for Technical Specifications and additional information:
http://h18000.www1.hp.com/products/quickspecs/13972_div/13972_div.html
(Worldwide)

HP Server Console Switches

HP Server Console 0x2x8 Port Analog Switch	AF616A
HP Server Console 0x2x16 Port Analog Switch	AF617A
HP TAA 0x2x16xKVM Server Console G2 Switch	AF626A

NOTE: Please see the QuickSpecs for Technical Specifications and additional information:
http://h18000.www1.hp.com/products/quickspecs/11834_div/11834_div.html
(Worldwide)

HP Server Console Switch G2 with Virtual Media & CAC

HP 0x2x16 KVM Server Console Switch G2 with Virtual Media CAC Software	AF618A
HP 0x2x32 KVM Server Console Switch G2 with Virtual Media CAC Software	AF619A
HP KVM CAT5 1-pack USB Interface Adapter	336047-B21

NOTE: Please see the QuickSpecs for Technical Specifications and additional information:

Additional Options

	http://h18000.www1.hp.com/products/quickspecs/13475_div/13475_div.html (Worldwide)	
	HP IP Console Switch G2 with Virtual Media & CAC	
	HP 1x4 USB/PS2 KVM Console Switch	AF611A
	HP 1x1Ex8 KVM IP Console Switch G2 with Virtual Media CAC Software	AF620A
	HP 2x1Ex16 KVM IP Console Switch G2 with Virtual Media CAC Software	AF621A
	HP 4x1Ex32 KVM IP Console Switch G2 with Virtual Media CAC Software	AF622A
	NOTE: Please see the QuickSpecs for Technical Specifications and additional information: http://h18000.www1.hp.com/products/quickspecs/13474_div/13474_div.html (Worldwide)	
HP USB and SD Options	**HP Flash Media Kits for USB Drives**	
	HP 8GB USB Enterprise Mainstream Flash Media Drive Key Kit	737953-B21
	HP Enterprise Mainstream Flash Media Kits for Memory Cards	
	HP 8GB microSD Enterprise Mainstream Flash Media Kit	726116-B21
	HP 32GB microSD Enterprise Mainstream Flash Media Kit	700139-B21
	NOTE: Please see the QuickSpecs for Technical Specifications and additional information: http://h18000.www1.hp.com/products/quickspecs/13971_div/13971_div.html	
	Other USB and SD Options	
	HP 36pin Serial/USB/VGA Dongle Cord Kit	676277-B21
HP Care Pack Services	HP 3 year 24x7 24 hour Call to Repair ProLiant s6500 Hardware Support	UR425E
	HP 3 year 24x7 24 hour Call to Repair with Defective Media Retention ProLiant s6500 Hardware Support	UR426E
	HP 3 year 4 hour 13x5 ProLiant s6500 Hardware Support	UR400E
	HP 3 year 4 hour 13x5 with Defective Media Retention ProLiant s6500 Hardware Support	UR401E
	HP 3 year 4 hour 24x7 ProLiant s6500 Hardware Support	UR402E
	HP 3 year 4 hour 24x7 with Defective Media Retention ProLiant s6500 Hardware Support	UR403E
	HP 3 year 6 hour 24x7 Call to Repair ProLiant s6500 Hardware Support	UR404E
	HP 3 year 6 hour 24x7 Call to Repair with Defective Media Retention s6500 Hardware Support	UR405E
	HP 3 year Next business day ProLiant s6500 Hardware Support	UR398E
	HP 3 year Next business day with Defective Media Retention ProLiant s6500 Hardware Support	UR399E
	HP 3 year 4 hour 24x7 ProLiant s6500 Collaborative Support	U1M52E
	HP 3 year 4 hour 24x7 ProLiant s6500 Proactive Care Service	U3C72E
	HP 3 year Next business day ProLiant s6500 Collaborative Support	U1M46E
	HP 3 year Next business day ProLiant s6500 Proactive Care Service	U3C66E
	HP 4 year 24x7 24 hour Call to Repair ProLiant s6500 Hardware Support	UR427E
	HP 4 year 24x7 24 hour Call to Repair with Defective Media Retention ProLiant	UR428E

Additional Options

s6500 Hardware Support	
HP 4 year 4 hour 13x5 ProLiant s6500 Hardware Support	UR408E
HP 4 year 4 hour 13x5 with Defective Media Retention ProLiant s6500 Hardware Support	UR409E
HP 4 year 4hour 24x7 ProLiant s6500 Hardware Support	UR410E
HP 4 year 4 hour 24x7 with Defective Media Retention ProLiant s6500 Hardware Support	UR411E
HP 4 year 6 hour 24x7 Call to Repair ProLiant s6500 Hardware Support	UR412E
HP 4 year 6 hour Call to Repair 24x7 with Defective Media Retention ProLiant s6500 Hardware Support	UR413E
HP 4 year Next business day ProLiant s6500 Hardware Support	UR406E
HP 4 year Next business day with Defective Media Retention ProLiant s6500 Hardware Support	UR407E
HP 5 year 24x7 24 hour Call to Repair ProLiant s6500 Hardware Support	UR429E
HP 5 year 24x7 24 hour Call to Repair with Defective Media Retention ProLiant s6500 Hardware Support	UR430E
HP 5 year 4 hour 13x5 ProLiant s6500 Hardware Support	UR416E
HP 5 year 4 hour 13x5 with Defective Media Retention ProLiant s6500 Hardware Support	UR417E
HP 5 year 4 hour 24x7 ProLiant s6500 Hardware Support	UR418E
HP 5 year 4 hour 24x7 with Defective Media Retention ProLiant s6500 Hardware Support	UR419E
HP 5 year 6 hour 24x7 Call to Repair ProLiant s6500 Hardware Support	UR420E
HP 5 year 6 hour 24x7 Call to Repair with Defective Media Retention s6500 Hardware Support	UR421E
HP 5 year Next business day ProLiant s6500 Hardware Support	UR414E
HP 5 year Next business day with Defective Media Retention ProLiant s6500 Hardware Support	UR415E

NOTE: For more information, customer/resellers can contact: http://www.hp.com/services/carepack.

Memory

HP ProLiant SL250s Gen8 Server

NOTE: Memory configurations listed do not apply to "Factory Integrated Models".
NOTE: Chart does not represent all possible memory configurations.

DDR3 memory population guidelines

For detailed memory configuration rules and guidelines, please use the Online DDR3 Memory Configuration Tool:
http://www.hp.com/go/ddr3memory-configurator

Each Intel® Xeon® E5-2600 family processor socket contains four memory channels that support two DIMMs each for a total of eight (8) DIMM per installed processor or a grand total of sixteen (16) DIMMs for the server. Up to 16GB capacity DIMMs are supported for 512GB of memory (16 DIMM slots x 32GB per DIMM).
NOTE: 512GB refers to Load Reduced DIMM (LRDIMM). The max for registered DIMM memory is 256GB.

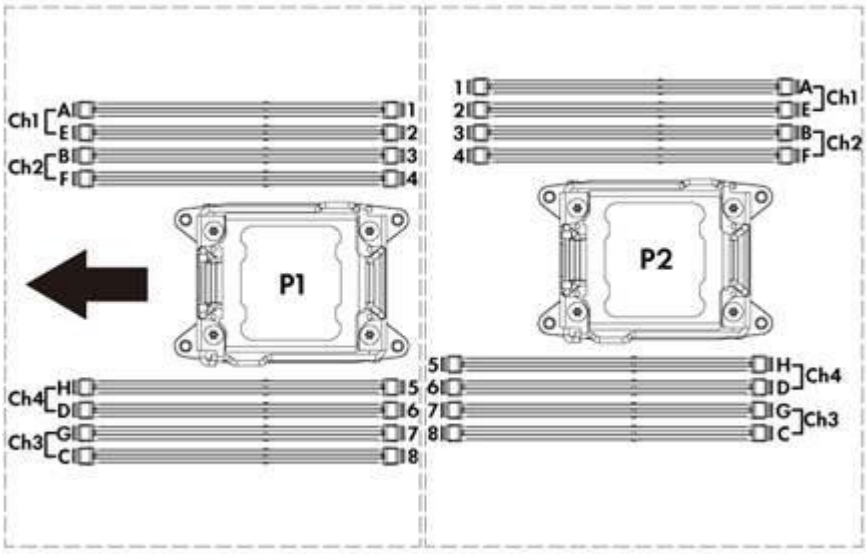

Memory Population Rules and Guidelines:

- White DIMM slots denote the first slot of a channel. For 1 DPC (DIMM per channel) populate white slots only.
- Install DIMMs only if the corresponding processor is installed.
- If only one processor is installed in a two processor system, only half of the DIMM slots are available.
- To maximize performance, it is recommended to balance the total memory capacity between all installed processors and to load the channels similarly whenever possible.
- Populate DIMMs from heaviest load (quad-rank) to lightest load (single-rank) within a channel
- Heaviest load (DIMM with most ranks) within a channel goes furthest from the processor
- RDIMMs operating at either 1.35V or 1.5V may be mixed in any order, but the system will power them at the higher voltage.
- Do not mix RDIMMs and UDIMMs.
- The Intel Xeon E5-2620 processor does not support DIMMs at 1.35V. Using the HP RBSU, 1.35V DIMMs can be changed to operate at 1.5V.
- The Intel Xeon E5-2620 processor does not support DIMMs at 1.35V. Using the HP RBSU, 1.35V DIMMs can be changed to operate at 1.5V.
- DIMMs of different speeds may be mixed in any order; the server will select a common optimal speed.
- The maximum memory speed is a function of the memory type, memory configuration, and processor model.
- The maximum memory capacity is a function of the memory type and number of installed processors.

Memory

- HP memory from previous generation servers is not qualified on the SL250s Gen8 Server. Certain HP SmartMemory features such as memory authentication and enhanced performance may not be supported.
- To realize the performance memory capabilities listed in this document, HP SmartMemory is required. For additional information, please see the HP SmartMemory QuickSpecs at: http://h18000.www1.hp.com/products/quickspecs/14225_div/14225_div.html.
- For memory population rules and additional memory guidelines, please see the SL250 Gen8 user guide at http://www.hp.com/support.

DIMM slot/capacity/populated speed table																	
DIMM Type	Registered DIMMS (RDIMMs)															Load Reduced (LRDIMMs)	
DIMM Rank	Single Rank (1R)							Dual Rank (2R)								Quad Rank (4R)	
DIMM Capacity	4GB	4GB	4GB	4GB	8GB	8GB	8GB	8GB	8GB	8GB	8GB	16GB	16GB	16GB	16GB	32GB	32GB
DIMM Native Speed (MHz)	1600	1333	1600	1866	1600	1600	1866	1333	1600	1600	1866	1333	1600	1600	1866	1333	1866
Voltage	Std	LV	LV	Std	Std	LV	Std	LV	Std	LV	Std	LV	Std	LV	Std	LV	Std
SLOTS THAT CAN BE POPULATED																	
16 slot servers	16	16	16	16	16	16	16	16	16	16	16	16	16	16	16	16	16
MAXIMUM CAPACITY (GB)*																	
Capacity	64	64	64	64	128	128	128	128	128	128	128	128	256	256	256	512	512
POPULATED DIMM SPEED (MHz)																	
1 DIMM Per Channel	1600	1333	1600	1866	1600	1600	1866	1333	1600	1600	1866	1333	1600	1600	1866	1333***	1866
2 DIMM PEr Channel	1600	1333	1600	1866	1600	1600	1866	1333	1600	1600	1866	1333	1600	1600	1866	1333***	1866

* Maximum capacity will vary based on individual server platform qualification schedule
*** LRDIMM enables 3 DIMMs per channel. HP SmartMemory will supportsup to 3DPC@DDR3-1066 at 1.35V. Third party memory may only support 3DPC @DDR3-1066 at 1.5V.

DIMM slot/capacity/populated speed table												
DIMM Type	Unbuffered with ECC DIMMs (UDIMMs)											
DIMM Rank	Single Rank (1R)				Dual Rank (2R)							
DIMM Capacity	2GB	2GB	2GB	2GB	4GB	4GB	8GB	8GB	4GB	4GB	8GB	8GB
DIMM Native Speed (MHz)	1333	1600	1600	1866	1333	1600	1333	1600	1600	1866	1600	1866
Voltage	LV	Std	LV	Std	LV	Std	LV	Std	LV	Std	LV	Std

Memory

SLOTS THAT CAN BE POPULATED												
16 slot servers	16	16	16	16	16	16	16	16	16	16	16	16
MAXIMUM CAPACITY (GB)*												
Capacity	32	32	32	32	64	64	128	128	64	64	128	128
POPULATED DIMM SPEED (MHz)												
1 DIMM Per Channel	1333	1600	1600	1866	1333	1600	1333	1600	1600	1866	1600	1866
2 DIMM PEr Channel	1333**	1600	1600	1866	1333**	1600	1333**	1600	1600	1866	1600	1866

* Maximum capacity will vary based on individual server platform qualification schedule
** For HP SmartMemory, UDIMM is supported at 2DPC@DDR3-1333. Third party memory may only support up to 2DPC@DDR3-1066.

- 2GB = 2048MB
- 4GB = 4096MB
- 8GB = 8192MB
- 16GB = 16384MB

DDR3 memory options part number decoder

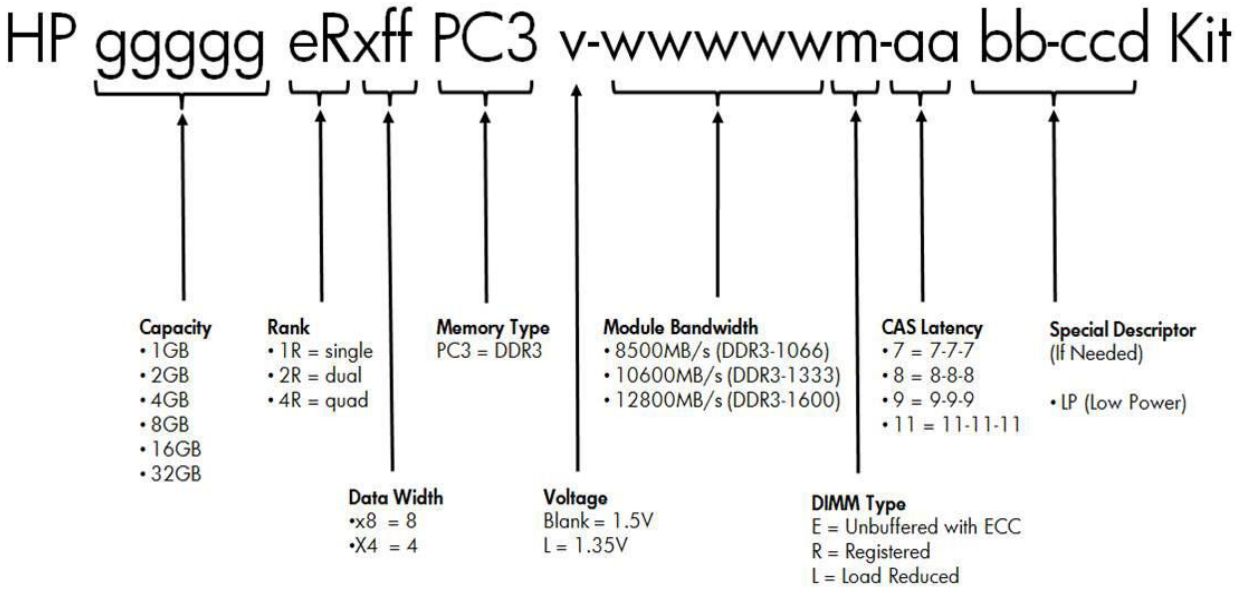

Following are memory options available from HP:

HP Memory

NOTE: HP memory from previous generation servers are not qualified or warranted with this HP ProLiant Server. HP SmartMemory is required to realize the memory performance improvements and enhanced functionality listed in this document for Gen8. For additional information, please see the HP SmartMemory QuickSpecs at: http://h18000.www1.hp.com/products/quickspecs/14225_div/14225_div.html
NOTE: LRDIMM, RDIMM, and UDIMMs are all distinct memory technologies and cannot

be mixed within a server. The majority of ProLiant Gen8 servers support LRDIMM, RDIMM and UDIMMs.

Registered DIMMs (RDIMMs)

NOTE: The following memory is supported by the E5-2600 v2 series Processors.

HP 4GB (1x4GB) Single Rank x4 PC3L-12800R (DDR3-1600) Registered CAS-11 Low Voltage Memory Kit	713981-B21
HP 4GB (1x4GB) Single Rank x4 PC3-14900R (DDR3-1866) Registered CAS-13 Memory Kit	708637-B21
HP 8GB (1x8GB) Dual Rank x4 PC3L-12800R (DDR3-1600) Registered CAS-11 Low Voltage Memory Kit	713983-B21
HP 8GB (1x8GB) Single Rank x4 PC3L-12800R (DDR3-1600) Registered CAS-11 Low Voltage Memory Kit	731765-B21
HP 8GB (1x8GB) Dual Rank x4 PC3-14900R (DDR3-1866) Registered CAS-13 Memory Kit	708639-B21
HP 8GB (1x8GB) Single Rank x4 PC3-14900R (DDR3-1866) Registered CAS-13 Memory Kit	731761-B21
HP 16GB (1x16GB) Dual Rank x4 PC3L-12800R (DDR3-1600) Registered CAS-11 Low Voltage Memory Kit	713985-B21
HP 16GB (1x16GB) Dual Rank x4 PC3-14900R (DDR3-1866) Registered CAS-13 Memory Kit	708641-B21

Registered DIMMs (RDIMMs)

NOTE: The following memory is supported by the E5-2600 series Processors.

HP 4GB (1x4GB) Single Rank x4 PC3L-10600R (DDR3-1333) Registered CAS-9 Low Voltage Memory Kit	647893-B21
HP 4GB (1x4GB) Single Rank x4 PC3-12800R (DDR3-1600) Registered CAS-11 Memory Kit	647895-B21
HP 8GB (1x8GB) Dual Rank x4 PC3L-10600R (DDR3-1333) Registered CAS-9 Low Voltage Memory Kit	647897-B21
HP 8GB (1x8GB) Single Rank x4 PC3-12800R (DDR3-1600) Registered CAS-11 Memory Kit	647899-B21

NOTE: 647899-B21 is supported by the E5-2600 and E5-2600v2 series Processors.

HP 8GB (1x8GB) Dual Rank x4 PC3-12800R (DDR3-1600) Registered CAS-11 Memory Kit	690802-B21
HP 16GB (1x16GB) Dual Rank x4 PC3L-10600R (DDR3-1333) Registered CAS-9 Low Voltage Memory Kit	647901-B21
HP 16GB (1x16GB) Dual Rank x4 PC3-12800R (DDR3-1600) Registered CAS-11 Memory Kit	672631-B21

NOTE: 672631-B21 is supported by the E5-2600 and E5-2600v2 series Processors.

Unbuffered with ECC DIMMs (UDIMMs)

NOTE: The following memory is supported by the E5-2600 v2 series Processors.

HP 2GB (1x2GB) Single Rank x8 PC3L-12800E (DDR3-1600) Unbuffered CAS-11 Low Voltage Memory Kit	713975-B21
HP 2GB (1x2GB) Single Rank x8 PC3-14900E (DDR3-1866) Unbuffered CAS-13 Memory Kit	708631-B21
HP 4GB (1x4GB) Dual Rank x8 PC3L-12800E (DDR3-1600) Unbuffered CAS-11 Low Voltage Memory Kit	713977-B21
HP 4GB (1x4GB) Dual Rank x8 PC3-14900E (DDR3-1866) Unbuffered CAS-13 Memory	708633-B21

Memory

Kit	
HP 8GB (1x8GB) Dual Rank x8 PC3L-12800E (DDR3-1600) Unbuffered CAS-11 Low Voltage Memory Kit	713979-B21
HP 8GB (1x8GB) Dual Rank x8 PC3-14900E (DDR3-1866) Unbuffered CAS-13 Memory Kit	708635-B21

Unbuffered with ECC DIMMs (UDIMMs)

NOTE: The following memory is supported by the E5-2600 series Processors.

HP 2GB (1x2GB) Single Rank x8 PC3-12800E (DDR3-1600) Unbuffered CAS-11 Memory Kit	669320-B21
HP 2GB (1x2GB) Single Rank x8 PC3L-10600E (DDR3-1333) Unbuffered CAS-9 Low Voltage Memory Kit	647905-B21
HP 4GB (1x4GB) Dual Rank x8 PC3-12800E (DDR3-1600) Unbuffered CAS-11 Memory Kit	669322-B21
HP 4GB (1x4GB) Dual Rank x8 PC3L-10600E (DDR3-1333) Unbuffered CAS-9 Low Voltage Memory Kit	647907-B21
HP 8GB (1x8GB) Dual Rank x8 PC3-12800E (DDR3-1600) Unbuffered CAS-11 Memory Kit	669324-B21
HP 8GB (1x8GB) Dual Rank x8 PC3L-10600E (DDR3-1333) Unbuffered CAS-9 Low Voltage Memory Kit	647909-B21

Load Reduced DIMMs (LRDIMMs)

HP 32GB (1x32GB) Quad Rank x4 PC3-14900L (DDR3-1866) Load Reduced CAS-13 Memory Kit **NOTE:** This memory is supported by the E5-2600 v2 series Processors.	708643-B21
HP 32GB (1x32GB) Quad Rank x4 PC3L-10600L (DDR3-1333) Load Reduced CAS-9 Low Voltage Memory Kit **NOTE:** This memory is only supported by the E5-2600 series Processors.	647903-B21

NOTE: All DDR3 memory option kits consist of one DIMM per kit. For detailed memory configuration rules and guidelines, please use the Online DDR3 Memory Configuration Tool: http://www.hp.com/go/ddr3memory-configurator.

NOTE: Kits described as LP include Low Power DIMMs. For more information on ProLiant Energy Efficient Features, see: http://www.hp.com/go/proliant-energy-efficient

NOTE: PC3L is a low voltage memory

Storage

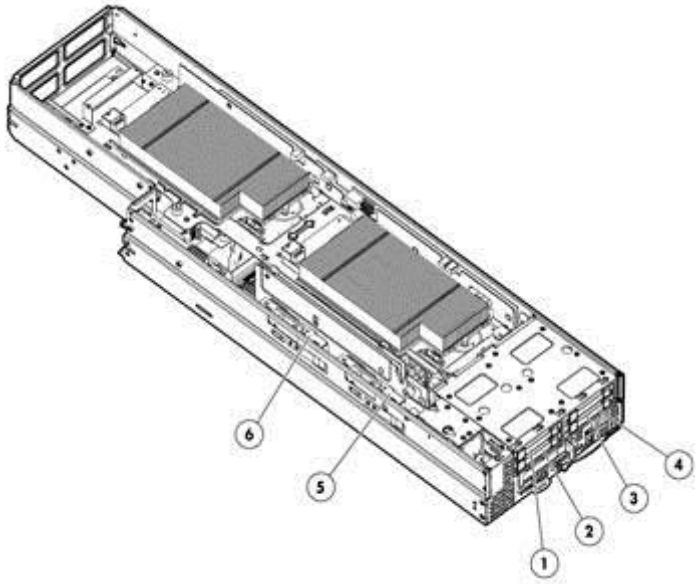

2U Tray

1-4	Up to four 2.5" hot plug hard drive bays
5	Up to four additional 2.5" non hot-plug drives can be configured when the SFF Hard Drive Enablement Kit is implemented in place of the included GPU kit

Technical Specifications

System Unit	**Chassis Dimensions** (H x W x D) Add fan extension kit (with bezel)	6.96 x 17.638 x 35.236in (17.68 x 44.8 x 89.55cm)	
	Weight (approximate)	Maximum (all hard drives, power supplies, and processors installed)	220lb (99.8kg)
	Input Requirements (per power supply)	Rated Line Voltage	90 to 140 VAC 180 to 264 VAC
		Rated Input Current	7.31A at 115VAC 3.6A at 230VAC
		Rated Input Frequency	47 to 63 Hz
		Rated Input Power	855W (at 100 VAC), 840.72W (at 200 VAC)
	Power Supply Output (per power supply)	Rated Steady-State Power	653.10W (at 100 VAC), 653.08W (at 200 VAC)
	System Inlet Temperature	Operating	50° to 95° F (10° to 35° C) at sea level with an altitude derating of 1.8°F per every 1000 ft (1.0°C per every 304.8 m) above sea level to a maximum of 10,000 ft (3048 m), no direct sustained sunlight. Maximum rate of change is 18°F/hr (10°C/hr). The upper limit may be limited by the type and number of options installed. System performance may be reduced if operating with a fan fault or above 86°F (30°C).
		Non-operating	-22° to 140° F (-30° to 60° C) Maximum rate of change is 36°F/hr (20°C/hr).
	Relative Humidity (non-condensing)	Operating	10% to 90% relative humidity (Rh), 82.4°F (28°C) maximum wet bulb temperature, non-condensing.
		Non-operating	5% to 95% relative humidity (Rh), 101.7°F (38.7°C) maximum wet bulb temperature, non-condensing.
	Altitude	Operating	10,000 ft (3048 m). This value may be limited by the type and number of options installed. Maximum allowable altitude change rate is 1500 ft/min (457 m/min).
		Non-operating	30,000 ft (9144 m). Maximum allowable altitude change rate is 1500 ft/min (457 m/min).
	Acoustic Noise	Listed are the declared A-Weighted sound power levels (LWAd) and declared average bystander position A-Weighted sound pressure levels (LpAm) when the product is operating in a 23°C ambient environment. Noise emissions were measured in accordance with ISO 7779 (ECMA 74) and declared in accordance with ISO 9296 (ECMA 109).	
		Idle	
		LWAd	6.4
		LpAm	45dBA
		Operating	

		LWAd	6.7
		LpAm	51dBA
	Emissions Classification (EMC)	FCC Rating	Class A
		Normative Standards	CISPR 22; EN55022; EN55024; FCC CFR 47, Pt 15; ICES-003; CNS13438; GB9254; K22;K24; EN 61000-3-2; EN 61000-3-3; EN 60950-1; IEC 60950-1
		NOTE: Product conformance to cited product specifications is based on sample (type) testing, evaluation, or assessment. This product or family of products is eligible to bear the appropriate compliance logos and statements.	
HP Ethernet 1Gb 2-port 361i Adapter	**Network Interface**	10Base-T/100Base-TX/1000Base-TX	
	Compatibility	IEEE 802.3 10Base-T	
		IEEE 802.3ab 1000Base-T	
		IEEE 802.3u 100Base-TX	
		IEEE 1588, IEEE 802.1AS	
		IEEE 802.3az - Energy Efficient Ethernet (EEE)	
	Data Transfer Method	PCI Express v 2.1, 5.0 GT/s and 2.5 GT/s bus speeds and supports for x1, x2, x4 links widths (Lanes)	
	Controller	I350 Powerville	
	Network Transfer Rate	10Base-T (Half-Duplex)	10 Mb/s per port, 20 Mb/s Combined
		10Base-T (Full-Duplex)	20 Mb/s per port, 40 Mb/S Combined
		100Base-TX (Half-Duplex)	100 Mb/s per port, 200 Mb/s Combined
		100Base-TX (Full-Duplex)	200 Mb/s per port, 400 Mb/s Combined
		1000Base-TX (Half and Full-Duplex)	1000Mb/s per port, 2000 Mb/s Combined
	Connector	RJ-45	
	Cable Support	10Base-T	Categories 3, 4 or 5 UTP; up to 328 ft (100 m)
		10/100/1000Base-TX	Category 5 UTP; up to 328 ft (100 m)
HP H220i Host Bus Adapter	**Disk Drive and Enclosure Interface - Transfer rate**	6Gb/s SAS (Serial Attached SCSI) 6Gb/s SATA (Serial ATA)	
	SAS Connectors	2 internal 4X connectors	
	Server Interface	x8 PCIe 3.0 provides 8GB/s maximum bandwidth	
	SAS Speed	6Gb/s SAS links provide 4.8GB/s maximum bandwidth	
	Cache Memory	None	
	Physical Drives Supported	Up to 8 physical drives	
	Hot Plug Support	Yes	
	RAID Support	None	
Environment-friendly Products and Approach	**End-of-life Management and Recycling**	Hewlett-Packard offers end-of-life HP product return, trade-in, and recycling programs in many geographic areas. For trade-in information, please go to: http://www.hp.com/go/green. To recycle your product, please go to: http://www.hp.com/go/green or contact your nearest HP sales office. Products returned to HP will be recycled, recovered or disposed of in a responsible manner.	

The EU WEEE directive (2002/95/EC) requires manufacturers to provide treatment information for each product type for use by treatment facilities. This information (product disassembly instructions) is posted on the Hewlett Packard web site at: http://www.hp.com/go/green. These instructions may be used by recyclers and other WEEE treatment facilities as well as HP OEM customers who integrate and re-sell HP equipment.

Summary of Changes

Date	Version History	Action	Description of Change:
21-Aug-2015	From version 38 to 39	Updated	Changes made throughout the QuickSpecs.
01-Nov-2014	From version 37 to 38	Changed	Service and support updated
18-Aug-2014	From Version 35 to 36	Changed	Updated Hard Drives, Computational and Graphics Accelerators (two locations), and added a section for HP Storage Options.
20-Jun-2014	From Version 34 to 35	Changed	Changes made in the Overview, Core and Additional Options sections.
10-Jun-2014	From Version 33 to 34	Changed	Service and Support, Memory, Hard Drives, Insight Software, Cloudera Licensing, PCIe Workload Accelerator Options, and USB and SD Options were revised.
31-Mar-2014	From Version 32 to 33	Changed	Changes made throughout the QuickSpecs.
18-Feb-2014	From Version 31 to 32	Changed	Changes made throughout the QuickSpecs.
24-Jan-2014	From Version 30 to 31	Changed	Updated Descriptions in the Configuration Information section.
17-Jan-2014	From Version 29 to 30	Changed	Memory and Tape Backup were revised.
16-Dec-2013	From Version 28 to 29	Changed	Changes made to the North America and Canada versions only.
11-Oct-2013	From Version 27 to 28	Changed	Updating supported options.
03-Oct-2013	From Version 26 to 27	Changed	Correction made in the Core Options/ Hard Drives and in the GPU Computing Modules sections.
13-Sep-2013	From Version 25 to 26	Removed	Note was removed from Upgradeability in Standard Features.
10-Sep-2013	From Version 24 to 25	Added	E5-2600 v2 series Processors, Memory, Controllers, and NICs were added Canonical Ubuntu was added to Operating Systems and Virtualization Software Support for ProLiant Servers Smart Array P430 and P431 Controllers were added to Storage Controllers HP StoreFabric SN1100E and CN1100R Fibre Channel Host Bus Adapters were added to HP Storage Options HP Storage Options was added to Additional Options
23-Jul-2013	From Version 23 to 24	Changed	Step 1 notes section was revised in Configuration Information - Factory Integrated Models.
05-Jul-2013	From Version 22 to 23	Changed	GPU Computing Modules was revised
15-May-2013	From Version 21 to 22	Added	Additional Options: Added HP PCIe Workload Accelerator Options and HP Basic Power Distribution Units sections.
		Changed	Standard Features: Updated Processor, Maximum Internal Storage, Common Slot Power Supplies and GPU Computing Modules sections. Configuration Information-Factory Integrated Models: Updated Step1A, Step 2 and Step 3. Core Options: Updated HP Unique Options, HP Processors, HP Hard Drives, HP Networking and HP InfiniBand sections. Additional Options: Updated HP Insight Software, GPU Computing Modules, HP Rack Options and HP USB and SD

Summary of Changes

			Options sections.
29-Apr-2013	From Version 20 to 21	Changed	Core Options: Updated HP Enterprise Configurator to HP Simple Configurator section.
25-Mar-2013	From Version 19 to 20	Added	Preconfigured Models: Removed 659042-B21 and 654939-B21 for the section Configurations Information - Factory Ingetrated Models: Removed 654393-B21 and 654940-B21 Step 1 section. Additional Options: Removed A0C39A from the GPU Computing Models section.
01-Mar-2013	From Version 18 to 19	Added	Core Options: Added 665240-B21 and 665243-B21 to HP Networking section.
22-Feb-2013	From Version 17 to 18	Changed	Changes made in the Models and Standard Features sections.
19-Feb-2013	From Version 16 to 17	Added	Added support for Intel's Xeon Phi 5110p Coprocessor.
04-Dec-2012	From Version 15 to 16	Changed	Change made in Standard Features section.
19-Oct-2012	From Version 14 to 15	Changed	Change made to sku description in Additional Options section.
05-Oct-2012	From Version 13 to 14	Changed	Description change mad in the Additional Options section.
24-Sep-2012	From Version 12 to 13	Changed	Changes were made in Overview, Standard Features, Optional Features, Additional Options and Technical Specifications sections.
24-Aug-2012	From Version 11 to 12	Changed	Changes made throughout the QuickSpec.
22-Aug-2012	From Version 10 to 11	Removed	Removed a discontinued sku from the Configuration Information section.
14-Aug-2012	From Version 9 to 10	Removed	Removed note from Standard Features, Configuration Information and Core Options sections.
13-Aug-2012	From Version 8 to 9	Changed/Added/Removed	Changes made throughout the QuickSpec. Added What's New and Step 4 Additional Options for Factory Integration Options Nodes. Removed HP Power Supplies, HP SL Advanced Power Manager, HP Power Cords and HP Rack Series Nodes.
03-Jul-2012	From Version 7 to 8	Changed	Changes made throughout the QuickSpec.
04-Jun-2012	From Version 6 to 7	Removed	Removed two processors from the Standard Features section.
18-May-2012	From Version 5 to 6	Changed	Changes made to the Processors section of Standard Features.
16-May-2012	From Version 4 to 5	Changed	Changes made in the Standard Features, Models, Options and Memory sections.
13-Apr-2012	From Version 3 to 4	Changed	Memory section and Server Interface in HP H220i Host Bus Adapter were revised.
26-Mar-2012	From Version 2 to 3	Changed	Changes made in the Memory and Options section.
07-Mar-2012	From Version 1 to 2	Changed	Change made in the Optional Features section.

Summary of Changes

© Copyright 2015 Hewlett-Packard Development Company, L.P.

The information contained herein is subject to change without notice.

Microsoft and Windows NT are US registered trademarks of Microsoft Corporation. Intel, the Intel logo, Xeon and Xeon Inside are trademarks of Intel Corporation in the U.S. and other countries.

The only warranties for HP products and services are set forth in the express warranty statements accompanying such products and services. Nothing herein should be construed as constituting an additional warranty. HP shall not be liable for technical or editorial errors or omissions contained herein.

For hard drives, 1GB = 1 billion bytes. Actual formatted capacity is less.